tyco Electronics

Catalog 1307612
Revised 7-01



PRODUCTS FOR INDUSTRIAL & COMMERCIAL APPLICATIONS

AGASTAT
ALCOSWITCH
AMP
BUCHANAN
MICRODOT
OEG
P&B
SCHRACK

Introduction

At Tyco Electronics, the world's largest passive components manufacturer, we have the products, knowledge, and services to meet the diverse electronic component needs of industrial and commercial OEM's. And we continue to develop innovative, cost-effective solutions to satisfy tomorrow's applications. This catalog contains the Tyco Electronics interconnection products, switches, relays and circuit breakers most widely used in these industries:

Commercial Building Equipment

- Security & Alarm Systems
- HVAC Equipment
- Lighting
- Elevators
- Vending Equipment
- Amusement Equipment

Appliance

- Cooking Equipment
- Refrigeration
- Laundry Equipment
- Countertop Appliances
- Air Conditioners
- Home Power Tools
- Garage Door Openers
- Lawn & Garden Equipment

Industrial Machinery & Process Control Equipment

- Manufacturing Equipment
- Material Handling Equipment
- Industrial Process Control Subsystems & Components
- Factory Automation Systems
- Robotics & Robotic Components

Motors

- Motors
- Generators
- Rectifiers
- Motor Controls

Test, Measurement, and Medical Instrumentation Equipment

- Automatic Test Equipment
- Semiconductor Testers
- Oscilloscopes
- Specialty Instrumentation
- Diagnostic Medical Equipment
- Therapeutic Medical Equipment
- General Medical Equipment

USING THIS CATALOG

The products listed in this catalog are the most widely used product part numbers offered by Tyco Electronics for industrial and commercial applications. Many of these parts are readily available directly from Tyco Electronics, or through an Authorized Tyco Electronics distributor. For complete product line information, order the catalogs referenced at the bottom of the product pages, contact the Tyco Electronics Technical Support Center at 1-800-522-6752, or visit our on-line electronic catalog on the internet at http://catalog.tycoelectronics.com (see inside back cover of catalog for Support Services information).

Application Guide

An *Application Guide*, immediately following the *Table of Contents*, identifies the segments of the Industrial and Commercial markets in which the products contained in this catalog are *typically* used.

Part Number Index

Section 14 contains a *Part Number Index* that lists all cataloged Tyco Electronics part numbers by base number only. Complete Tyco Electronics part numbers with prefixes and/or suffixes are shown on the pages indicated. The part numbers of products acquired from Thomas & Betts Corporation by Tyco Electronics are included in this index as complete Thomas & Betts part numbers. (Acquired products are described at top of next page.) You will find this index to be extremely helpful if you already know the Tyco Electronics or Thomas & Betts part number.

Introduction

Acquired Products Part Number Cross Reference

The ALCOSWITCH and BUCHANAN products in this catalog were acquired from Thomas & Betts Corporation by Tyco Electronics. Also included are former AUGAT and ANSLEY products that are now part of applicable AMP product lines. These products are listed in this catalog using a Thomas & Betts part number. Before ordering, see the *Acquired Products Part Number Cross Reference* in Section 15 for equivalent Tyco Electronics part numbers. If no equivalent part number is listed, contact the Technical Support Center at 1-800-552-6752 for assistance.

CD-ROM OF CATALOG AVAILABLE

This catalog is available in PDF (Portable Document Format) on a CD-ROM. Request CD No. 1308356. Links are provided to our on-line Electronic Catalog (http://catalog.tycoelectronics.com) where you can access customer drawings, application specifications, product specifications, and instruction sheets. To reduce your CAD input time, the Electronic Catalog also contains 2D geometries and 3D CAD models in IGES format for many of the parts listed in this catalog.

NEED MORE INFORMATION?

See the inside back cover of this catalog for helpful information about our Support Services.

Disclaimer

While Tyco Electronics has made every reasonable effort to ensure the accuracy of the information in this catalog, Tyco Electronics does not guarantee that it is error-free, nor does Tyco Electronics make any other representation, warranty, or guarantee that the information is accurate, correct, reliable or current. Tyco Electronics reserves the right to make any adjustments to the information contained herein at any time without notice. Tyco Electronics expressly disclaims all implied warranties (and all express warranties, except as otherwise stated in this catalog) regarding the information contained herein, including but not limited to any implied warranties or merchantability or fitness for a particular purpose. It is recommended that you test any new or replacement product before incorporating into a system.

The dimensions in this catalog are for reference purposes only and are subject to change without notice. Dimensions are in inches over [millimeters], unless otherwise specified. Always consult our customer drawings for recommended PC board layout and panel cutout dimensions; do not use catalog dimensions. Specifications are subject to change without notice. Consult Tyco Electronics at 1-800-522-6752 for latest dimensions and design specifications.

©1999 and 2001 by Tyco Electronics Corporation. All rights reserved.

ACTION PIN, AGASTAT, ALCOSWITCH, AMP, AMP DUOPLUG 2.5, AMP MONO-SHAPE, AMP SC, AMPACT, AMP-BARREL, AMP-DUAC, AMP-FAX, AMP-HDI, AMP-IN, AMPINNERGY, AMP-LATCH, AMPLI-BOND, AMPLIMITE, AMPLIVAR, AMPMODU, AMP-O-LECTRIC, AMP-O-MATIC, AMPOMATOR, AMPOWER, AMP-TAPEMATIC, AMP-TAPETRONIC, AMP-TY, BANTAM ROTA-CRIMP, BUCHANAN, CABLE MAKER, CERTI-CRIMP, CERTI-LOK, CERTI-SEAL, CHAMP, CHAMP-LOK, CHAMPOMATOR, COAXICON, Comp-U-Sertor, COPALUM, DIAMOND GRIP, DIPLOMATE, DUALAN, DYNA-CRIMP, ENERFLEX, EPO-TEK, EUROLATCH, FASTIN-FASTON, FASTON, FSD, Green Series, HOLTITE, JACKMATE, LGH, LightCrimp Plus, LightCrimp, LIGHTRAY MPX, MAG-MATE, MARC 43, MARC 53, MARC 63, MARC 73, MATE-N-LOK, MICRODOT, MICRO-EDGE, Micro-MaTch, MICRO-PITCH, MICTOR, OEG, P&B, PICABOND, PIDG, PLASTI-BOND, PLASTI-GRIP, POWERBAND, PRO-CRIMPER, RAYCHEM, R-CAM, RDI, ROTA-CRIMP, RSD, SCHRACK, SHUR-PLUG, SMT QUICK-GRIP, SNAPTRACK, SOLISTRAND, STRATO-THERM, ST, TERMASHIELD, TERMI-FOIL, TERMINYL, TERMI-POINT, TETRA-CRIMP, T-HEAD, Tiny, TRA-CON, TWIST/CON, TYCO, and Z-PACK are trademarks.

AIRflex, FLEXA, FLEXAgraff, FLEXAquick, ROHRflex are trademarks of FLEXA GMBH & CO. PRODUKTION UND VERTRIEB.
AT&T and WESTERN ELECTRIC are trademarks of AT&T.
BELDEN is a trademark of Belden Wire and Cable Company.
BERK-TEK is a trademark of Berk-Tek, Incorporated.
BRAND REX is a trademark of Brand-Rex Company.
Compact PCI is a trademark of PICMG-PCI Industrial Computers Manufacturers Group, Inc.
Craftsman, Duramax, Ryton, Sears, Stanley and Xcelite are trademarks of their respective companies.
FutureBus+ is a trademark of Institute of Electrical and Electronic Engineers, Inc.
Komax is a trademark of Komax Corporation.
LOCTITE is a trademark of Loctite Corporation.
MOLEX and Mini-Fit, Jr. are trademarks of Molex Incorporated.
MYLAR and TEFLON are trademarks of E.I. DuPont de Nemours and Company.
ROLM is a trademark of the Rolm Corp.
TETRASEALS is a trademark of Goshen Rubber Co, Inc.
Other products, logos, and company names mentioned herein may be trademarks of their respective owners.

Table of Contents

Application Guide
v-ix

Identifies the segments of the Industrial and Commercial markets in which the products contained in this catalog are *typically* used.

1 **Input/Output Connectors**
1001-1164

AMPLIMITE Subminiature D .050 Series, AMPLIMITE Subminiature D Commercial, AMPLIMITE Subminiature D per MIL-C-24308, Microminiature D (MICRODOT), Rectangular (MICRODOT), CHAMP .050 Series II Ribbon Style, SDL (Shielded Data Link), Shielded Miniature Circular DIN, and Modular Plug & Jack Connectors.

2 **PCB and Wire Connectors**
2001-2268

Card Edge, AMPMODU 50/50 Grid Board-to-Board, AMPMODU System 50 Board-to-Board, AMPMODU .025 Square Interconnection System, AMPMODU MTE IDC Interconnection System, AMPMODU MT and Shielded MT IDC Interconnection System, AMPMODU .031 x .062 Interconnection System, PC/104 and PC/104-*Plus*, MTA-100 & MTA-156 IDC, CHAMP .050 Series I Ribbon Style, 0.8mm FH (Free Height) Board-to-Board, CT (Common Termination) Wire-to-Board, EI (Economy Interconnect) Wire-to-Board, and Micro MaTch Board-to-Board & Wire-to-Board Connectors. PCB Terminals & Disconnects.

3 **Backplane /**
High Speed Connectors
3001-3110

Micro-Strip, MICTOR, Z-PACK 2mm HM, Z-PACK 2mm Futurebus+, Z-PACK Stripline 100, AMP-HDI (High Density Interconnect), TBC Plus (Twin Beam Contact), and Eurocard (DIN 41612) Connectors.

4 **Ribbon and Flexible Flat**
Cable Products
4001-4060

Ribbon Cable Connectors: AMPMODU 50/50 Grid and AMP-LATCH Connectors. IDC Flat Ribbon Cable. Flexible Film Products: .050 x .100 and .100 x .100 Centerline Flexible Flat Conductor (FFC) Connectors, and 1.0mm FPC (Flexible Printed Circuit) Connectors.

5 **Sockets**
5001-5080

DIP, SIP, SIMM, DIMM, PLCC, PQFP, and HOLTITE Press-fit Discrete Sockets. Display and Specialty Sockets. Adapters.

6 **Switches**
6001-6096

DIP, Slide, Toggle, Tact, Pushbutton, and Power Tool Switches. Industrial Controls. Knobs.

7 **Terminals and Splices**
7001-7172

Uninsulated Terminals: SOLISTRAND, DIAMOND GRIP, STRATO-THERM, AMPOWER. Insulated Terminals: PIDG, Radiation Resistant, PLASTI-GRIP, AMPLI-BOND, TERMINYL, CERTI-SEAL, and Closed End Splices. Quick Connect/Disconnect Terminals: FASTON, FASTIN-FASTON, Positive Lock, Positive Lock RAST 5, Ultra-Fast FASTON, Ultra-Fast Plus FASTON, Ultra-Pod FASTON, and PIDG FASTON. Machine Applied Open Barrel Terminals. Magnet Wire Terminals: AMPLIVAR and MAG-MATE. Aluminum/Copper Wire Terminals: TERMI-FOIL and COPALUM. Appliance Related Connectors: Power Blocks & Rings, Surface Burner Connector System, and RAST 5/2.5 Products.

8 **Terminal Blocks**
8001-8130

Eurostyle, Barrier Strip, Card Edge, Europa, and NEMA Style Terminal Blocks. Interface Module Systems.

Pin and Socket Connectors 9001-9260

Universal MATE-N-LOK II, Universal MATE-N-LOK, Commercial MATE-N-LOK, .140 MATE-N-LOK, .093 and .062 Commercial Pin and Socket, Mini-Universal MATE-N-LOK 2, Mini-Universal MATE-N-LOK, Micro MATE-N-LOK 3mm, (MR) Miniature Rectangular, AMP-DUAC, Precision Pin & Socket Contacts, Circular Plastic (CPC) & Metal-Shell Circular Plastic, MICRODOT Circular, M Series, Metrimate, and Econoseal Connectors. 9

RF Coax Connectors 10001-10076

BNC, TNC, Decoupled, Twin BNC, N Series, F Series, G Series, SMA, SMB, MCX, OSP Miniature Blind Mate, OSSP Subminiature Blind Mate, OSMP, OSMT, SMT QuickGrip, MMCX, and MICRODOT Connectors. Between Series Adapters. 10

Fiber Optic Products 11001-11030

LightCrimp, ST-Style, AMP SC-Style, and FSMA Connectors. Active Device Mounts. Adapters. AMP SC Duplex Transceivers, 1.3 µm LED, Multimode InGaAs Photodetector. 11

Specialty Products & Relays and Circuit Breakers 12001-12040

Flexible Cable Protection System, ENERFLEX Flexible Conduit Connectors, Convenience Outlets, LGH High Voltage Connectors, LGH Micro-Miniature High Voltage Connectors, High Current Commercial Connector, AMP Power Lock, and AMPINNERGY Connectors. AGASTAT, OEG, P&B, and SCHRACK Relays and Circuit Breakers. 12

Tooling 13001-13028

Hand, semiautomatic, and fully-automatic tooling for application of crimp, insulation displacement contact (IDC), inserted, and flexible circuit products. Auxiliary equipment. 13

Part Number Index 14001-14030

Listing of Tyco Electronics base part numbers and associated page numbers. Includes part numbers and associated page numbers of ALCOSWITCH, ANSLEY, AUGAT, and BUCHANAN products acquired from Thomas & Betts Corporation. 14

Acquired Products Part Number Cross Reference 15001-15024

Cross reference comprising ALCOSWITCH, ANSLEY, AUGAT, and BUCHANAN products acquired from Thomas & Betts Corporation. Provides cross reference between T&B and Tyco Electronics part numbers, and associated page numbers. 15

	Page Number	Product	Market Segment: Commercial & Building Equipment (HVAC, Lighting, Security, Vending)	Appliance	Industrial Machinery & Process Control Equipment	Motors	Instrumentation Equipment (Test, Measurement, Medical)
1		**Input/Output Connectors**					
	1002-1019	AMPLIMITE .050 Series Subminiature D Connectors	✔		✔		✔
	1020-1094	AMPLIMITE Subminiature D Connectors	✔	✔	✔		✔
	1095-1102	AMPLIMITE Subminiature D Connectors per MIL-C-24308			✔		✔
	1103	Microminiature D Connectors (MICRODOT)			✔		✔
	1104	Rectangular Connectors (MICRODOT)			✔		✔
	1105-1109	CHAMP .050 Series II Ribbon Style Connectors					✔
	1110-1136	CHAMP Ribbon Style Connectors	✔		✔		✔
	1137-1141	SDL (Shielded Data Link) Connectors			✔		✔
	1142-1145	Shielded Miniature Circular DIN Connectors	✔		✔		✔
	1146-1152	Modular Plugs		✔	✔	✔	✔
	1153-1163	Modular Jacks		✔	✔	✔	✔
2		**PCB and Wire Connectors**					
	2003-2020	Card Edge Connectors					
	2003-2006	Standard Edge .050 Series PCI					✔
	2007-2010	Standard Edge .050 Series			✔		✔
	2011-2017	Standard Edge II			✔		✔
	2018-2020	Low Profile	✔				
	2021-2026	AMPMODU 50/50 Grid Board-to-Board Connectors			✔		✔
	2027-2041	AMPMODU System 50 Board-to-Board Connectors			✔		✔
	2042-2163	AMPMODU .025 Square Interconnection System	✔	✔	✔		✔
	2164-2178	AMPMODU .031 x .062 Interconnection System	✔		✔		✔
	2179-2184	PC/104 and PC/104-*Plus* Connectors			✔		
	2185-2196	MTA-100 IDC Connectors	✔	✔	✔		
	2197-2198	CST-100 II Crimp Connectors	✔	✔	✔		
	2199-2211	MTA-156 IDC Connectors	✔	✔	✔		
	2212-2213	MTA-156 IDC Quad Connectors	✔	✔	✔		
	2214-2218	SL-156 Crimp Connectors	✔	✔	✔		
	2220-2223	IDC Flat Ribbon Cable	✔	✔	✔		✔
	2228-2230	CHAMP .050 Series I Board-to-Board Connectors					✔
	2231-2239	0.8mm Free Height (FH) Surface Mount Board-to-Board Connectors					✔
	2240-2245	CT (Common Termination) Wire-to-Board Connectors			✔		✔
	2246-2252	Economy Interconnect (EI) Series Wire-to-Board and Wire-to-Wire Connectors	✔		✔		
	2253-2259	Micro MaTch Miniature Board-to-Board and Wire-to-Board Connector System	✔		✔		✔
	2260-2268	Printed Circuit Board Terminals and Disconnects	✔	✔	✔		✔
	3002-3007	Micro-Strip Connectors					✔
	3008-3019	MICTOR Connectors					✔
	3020-3048	Z-PACK 2mm HM Connectors			✔		✔
	3049-3057	Z-PACK 2mm FutureBus+ Connectors					✔
	3058-3067	Z-PACK Stripline 100 Connectors					✔
	3068-3077	AMP-HDI (High Density Interconnect) Connectors			✔		✔
	3078-3084	TBC Plus (Twin-Beam Contact) Connectors			✔		✔
	3085-3110	Eurocard Connectors			✔		✔

			Market Segment				
	Page Number	Product	Commercial & Building Equipment (HVAC, Lighting, Security, Vending)	Appliance	Industrial Machinery & Process Control Equipment	Motors	Instrumentation Equipment (Test, Measurement, Medical)
4		Ribbon and Flexible Flat Cable Products					
	4002-4032	Ribbon Cable Connectors					
	4002-4004	AMPMODU 50/50 Grid Connectors	✔		✔		✔
	4005-4006	AMP-LATCH System 50 Connectors	✔		✔		✔
	4007-4032	AMP-LATCH Ribbon Cable Connectors	✔	✔	✔		✔
	4033-4058	Flexible Film Products					
	4033-4038	.050 x .100 Centerline FFC Cable Connectors	✔		✔		✔
	4039-4054	.100 x .100 Centerline FFC Cable Connectors	✔	✔	✔		✔
	4055-4059	1.0 [.039] FPC (Flexible Printed Circuit) Connectors	✔		✔		✔
5		Sockets					
	5002-5017	DIP Sockets			✔		✔
	5018-5020	SIP Sockets			✔		✔
	5021-5023	SIMM MICRO-EDGE Sockets					✔
	5024, 5025	SIMM II Right-Angle Sockets					✔
	5026, 5027	SO DIMM Sockets					✔
	5028-5031	DIMM II Sockets					✔
	5032	DIMM IIP (Performance) Sockets					✔
	5033-5038	PLCC Sockets	✔		✔		✔
	5039-5042	PQFP Sockets			✔		✔
	5043-5047	HOLTITE Press-fit Zero Profile Discrete Sockets	✔		✔		✔
	5048-5052	Adapters			✔		✔
	5053-5055	Display Sockets	✔		✔		✔
	5056-5080	Specialty Sockets					
	5056-5060	Crystal Socket Assemblies			✔		✔
	5061, 5062	Programming Jumper Plug, Assemblies	✔		✔		✔
	5063	Fuse Sockets	✔		✔		✔
	5064	Crystal Oscillator Sockets			✔		✔
	5065, 5066	Low Profile Sockets	✔		✔		✔
	5067-5070	Transistor Sockets			✔		✔
	5071, 5072	Lamp Sockets	✔		✔		✔
	5073, 5074	TO-3 Transistor Sockets			✔		✔
	5075, 5076	Push Fit Test Jacks			✔		✔
	5077, 5078	Printed Circuit Test Jacks			✔		✔
	5079, 5080	Micro-Miniature Test Jacks			✔		✔
	6002-6008	DIP Switches	✔		✔		✔
	6009-6030	Slide Switches	✔	✔			✔
	6031-6045	Toggle Switches	✔			✔	✔
	6046-6048	Tact Switches	✔	✔	✔		✔
	6049-6064	Pushbutton Switches	✔	✔	✔		✔
	6065-6077	Industrial Controls	✔		✔	✔	✔
	6078-6094	Knobs	✔		✔	✔	✔
	6095, 6096	Power Tool Switches		✔			

Products for Industrial & Commercial Applications
Dimensions are shown for reference purposes only.
Dimensions are in inches and millimeters unless otherwise specified. Values in brackets are metric equivalents.
Specifications subject to change.
Technical Support Center
1-800-522-6752
www.tycoelectronics.com

	Page Number	Product	Market Segment: Commercial & Building Equipment (HVAC, Lighting, Security, Vending)	Appliance	Industrial Machinery & Process Control Equipment	Motors	Instrumentation Equipment (Test, Measurement, Medical)
7		**Terminals and Splices**					
	7003-7036	Uninsulated Terminals and Splices					
	7003-7016	SOLISTRAND (Solid & Stranded Wire Applications)	✔	✔	✔		
	7017-7020	DIAMOND GRIP		✔			
	7021-7031	STRATO-THERM (High-Temperature Applications)		✔	✔		✔
	7032-7036	AMPOWER (Power Applications)		✔	✔		✔
	7037-7074	Insulated Terminals and Splices					
	7037-7049	PIDG (Pre-Insulated DIAMOND GRIP)	✔	✔	✔		✔
	7050, 7051	Radiation Resistant/150°C		✔			
	7052-7061	PLASTI-GRIP	✔		✔		✔
	7062-7064	AMPLI-BOND			✔		
	7065, 7066	TERMINYL			✔		
	7069	CERTI-SEAL Splices (Sealing Applications)	✔				
	7070-7074	Closed End Splices	✔	✔	✔		✔
	7075-7125	Quick Connect/Disconnect Terminals and Splices					
	7075-7109	FASTON Receptacles and Tabs	✔	✔	✔	✔	✔
	7110-7113	Positive Lock FASTON Receptacles		✔	✔	✔	✔
	7114	Positive Lock RAST 5 Connector System		✔			
	7115-7119	Ultra-Fast FASTON & Ultra-Fast Plus FASTON Fully Insulated Receptacles and Tabs	✔	✔	✔	✔	✔
	7120-7122	Ultra-Pod Fully Insulated FASTON Receptacles and Tabs	✔	✔	✔		✔
	7123-7125	PIDG FASTON Receptacles	✔	✔	✔		✔
	7126-7133	Machine Applied Terminals and Splices, Open Barrel	✔	✔	✔	✔	✔
	7135-7149	Magnet Wire Terminals and Splices					
	7135-7139	AMPLIVAR	✔	✔	✔	✔	✔
	7140-7149	MAG-MATE	✔	✔	✔	✔	✔
	7150-7157	Aluminum/Copper Wire Terminals and Splices					
	7150-7153	TERMI-FOIL (For Copper & Aluminum Foil or Strip)			✔		✔
	7154-7157	COPALUM (Copper and Aluminum Wire)		✔	✔		
	7158-7171	Appliance Related Connectors					
	7158-7160	Power Blocks and Power Rings		✔			
	7161-7163	Surface Burner Connector System		✔			
	7164-7171	RAST 5/2.5 Connectors		✔			
8		**Terminal Blocks**					
	8002-8049	Eurostyle Terminal Blocks	✔		✔		✔
	8050-8077	Barrier Strips	✔		✔		
	8078-8082	Card Edge Connector Systems			✔		✔
	8083-8086	Interface Module Systems			✔		
	8087-8100	Europa Terminal Blocks	✔	✔	✔	✔	
	8101-8130	NEMA Terminal Blocks	✔		✔		

			Market Segment				
	Page Number	Product	Commercial & Building Equipment (HVAC, Lighting, Security, Vending)	Appliance	Industrial Machinery & Process Control Equipment	Motors	Instrumentation Equipment (Test, Measurement, Medical)
9	Pin and Socket Connectors						
	9003-9014	Universal MATE-N-LOK II Connectors	✔	✔	✔		✔
	9015-9028	Universal MATE-N-LOK Connectors	✔	✔	✔		✔
	9022	Universal MATE-N-LOK Flanged Cap Housings with Twist and Lock Feature		✔			
	9029-9040	Commercial MATE-N-LOK Connectors		✔	✔		✔
	9041-9043	.140 MATE-N-LOK Connectors, Large Insulation		✔	✔		✔
	9044-9049	.093 Commercial Pin and Socket Connectors		✔	✔		✔
	9050-9057	Mini-Universal MATE-N-LOK 2 Connectors	✔	✔	✔		✔
	9058-9066	Mini-Universal MATE-N-LOK Connectors	✔	✔	✔		✔
	9067	Micro MATE-N-LOK 3mm Pitch Connector System			✔		✔
	9068-9076	(MR) Miniature Rectangular Connectors			✔		✔
	9077-9079	.062 Commercial Pin and Socket Connectors	✔	✔	✔		✔
	9086-9093	AMP-DUAC Connectors	✔	✔	✔		✔
	9094-9118	Precision Pin and Socket Contacts	✔		✔		✔
	9119-9169	Circular Plastic (CPC) & Metal-Shell Circular Plastic Connectors	✔		✔		✔
	9170, 9171	MICRODOT Circular Connectors	✔		✔		✔
	9173-9222	M Series Pin and Socket Connectors			✔		✔
	9223-9252	Metrimate Pin and Socket Connectors			✔		
	9253-9259	Econoseal Sealed Pin and Socket Connectors	✔		✔		✔
10	RF Coax Connectors						
	10004-10035	Miniature Connectors					
	10004-10018	BNC Connectors	✔		✔		✔
	10019-10026	TNC Connectors			✔		✔
	10027	Decoupled Connectors			✔		✔
	10029	Twin BNC Connectors					✔
	10030-10034	N Series Connectors					✔
	10035	F Series Connectors					✔
	10035	G Series Connectors					✔
	10036-10066	Subminiature Connectors					
	10036-10049	SMA Connectors	✔				✔
	10050-10061	SMB Connectors	✔				✔
	10062	MCX Connectors					✔
	10063	Blind Mate Connectors					
	10064	OSP Miniature Blind Mate Connectors					✔
	10065	OSSP Subminiature Blind Mate Connectors					✔
	10066	OSMP Connectors					✔
	10067-10071	Micro Miniature Connectors					
	10067	OSMT Connectors					✔
	10068	SMT QuickGrip Connectors					✔
	10069	MMCX Connectors					✔
	10070, 10071	MICRODOT Coaxial Connectors			✔		✔
	10072, 10073	Between Series Adapters					✔

			Market Segment				
	Page Number	Product	Commercial & Building Equipment (HVAC, Lighting, Security, Vending)	Appliance	Industrial Machinery & Process Control Equipment	Motors	Instrumentation Equipment (Test, Measurement, Medical)
11	Fiber Optic Products						
	11002-11014	Connectors and Adapters					
	11002	LightCrimp Plus No Polish ST and AMP SC Connectors					✔
	11003	LightCrimp Epoxyless ST and AMP SC Connectors			✔		
	11004-11006	ST-Style Connectors			✔		✔
	11007	ST-Style Active Device Mounts					✔
	11009	SC-Style Adapters	✔				✔
	11010	SC-Style Connectors - Multimode	✔		✔		✔
	11014	FSMA Connectors					✔
	11015-11023	Actives					
	11015-11018	SC Duplex Transceivers					✔
	11019, 11020	1.3 µm LED					✔
	11021-11023	Multimode InGaAs Photodetector					✔
12	Specialty Products & Relays and Circuit Breakers						
	12002	Flexible Cable Protection System	✔		✔		
	12003	ENERFLEX Flexible Conduit Connectors	✔		✔		
	12004-12006	Convenience Outlets	✔	✔	✔		
	12007-12016	LGH High Voltage Connectors	✔		✔		✔
	12017-12021	LGH Microminiature High Voltage Connectors					✔
	12022-12024	High Current Commercial Connector	✔				
	12025-12029	AMP Power Lock Connectors			✔		
	12030-12034	AMPINNERGY Wire-to-Board Connectors	✔		✔		
	12035-12037	AMPINNERGY Wire-to-Wire Connectors	✔		✔		
	12038, 12039	Relays and Circuit Breakers	✔	✔	✔		✔

Products for Industrial & Commercial Applications
Dimensions are shown for reference purposes only.
Dimensions are in inches and millimeters unless otherwise specified. Values in brackets are metric equivalents.
Specifications subject to change.
Technical Support Center
1-800-522-6752
www.tycoelectronics.com

Table of Contents

AMPLIMITE Subminiature D Connectors

AMPLIMITE .050 Series Connectors 1002-1019

AMPLIMITE Subminiature D Cable Connectors
HDP-22 Crimp Snap-In Contact Connectors 1020-1025
HDE-20 IDC Connectors for Discrete Wire & Jacketed Cable.....1026-1033
HDF-20 IDC Connectors for Flat Ribbon Cable 1034-1038
HDP-20 Crimp Snap-In Contact Connectors 1039-1043
HD-20 Solder Cup Connectors 1044-1046
Accessories for Cable and PCB Connectors 1047-1065

AMPLIMITE Subminiature D PCB Connectors
Right-Angle Posted PCB Connectors 1066-1084
Straight Posted PCB Connectors 1085-1094

AMPLIMITE Subminiature D Connectors per MIL-C-24308 1095-1102

Microminiature D Connectors (MICRODOT) 1103

Rectangular Connectors (MICRODOT) 1104

CHAMP Ribbon Style Connectors

CHAMP .050 Series II Connectors 1105-1109

CHAMP Cable Connectors
IDC Cable Connectors 1110-1116
IDC Shielded Cable Connectors 1117, 1118
CHAMP Latch Low Profile Connectors 1119-1121
Shielded CHAMP Latch Connectors 1122, 1123

CHAMP PCB Connectors
PCB Connectors 1124-1127
ACTION PIN (Compliant Pin) PCB Connectors 1128, 1129
Shielded PCB Connectors 1130-1133
Application Tooling 1134-1136

SDL (Shielded Data Link) Connectors 1137-1141

Shielded Miniature Circular DIN Connectors 1142-1145

Modular Plugs

Unshielded Modular Plugs 1146-1149

High Performance Modular Plugs 1150-1152

Modular Jacks

Single Port Modular Jacks.....1153-1158

Multi-Port Modular Jacks 1159-1160

High Performance Modular Jacks 1161-1163

Products for Industrial & Commercial Applications
Dimensions are shown for reference purposes only.
Dimensions are in inches and millimeters unless otherwise specified. Values in brackets are metric equivalents.
Specifications subject to change.
Technical Support Center
1-800-522-6752
www.tycoelectronics.com

AMPLIMITE .050 Series Connectors (.050 x .100 [1.27 x 2.54] Centerline) Series III

Product Facts

- **Compatible with SCSI-2, SCSI-3, EIA RS-232, ISO-11569*, HIPPI, IPI-2 and IEE 802.3 MII standards**
- **High-density D type interface**
- **20 through 120 contact positions**
- **Tab plug contacts and tuning-fork receptacle contacts, with reliable two-point (redundant) contact; contact normal force is not dependent on plastic housing support**
- **Insulation displacement wire termination of discrete wire, round-to-flat laminated wires and flat ribbon cable**
- **Vertical and right-angle headers**
- **Vertical headers with ACTION PIN contacts**
- **Board-to-board, cable-to-board and cable-to-cable connection**
- **Rugged die cast back-shell with excellent EMI/RFI protection**
- **Shields mate before contacts, with ground mating first and breaking last**
- **Squeeze-to-release latches or jackscrew hardware**
- **Board connectors compatible with standard thru-hole flow solder and surface-mount reflow solder processes (Series III)**
- **Unshielded, All-Plastic Cable Plugs available**
- **Recognized under the Component Program of Underwriters Laboratories Inc., File No. E28476**
- **Certified by Canadian Standards Association, File No. LR 7189A-207**
- **Produced under a Quality Management System certified to ISO 9001**

A copy of the certificate is available upon request

*26-position cable assembly with spring latches

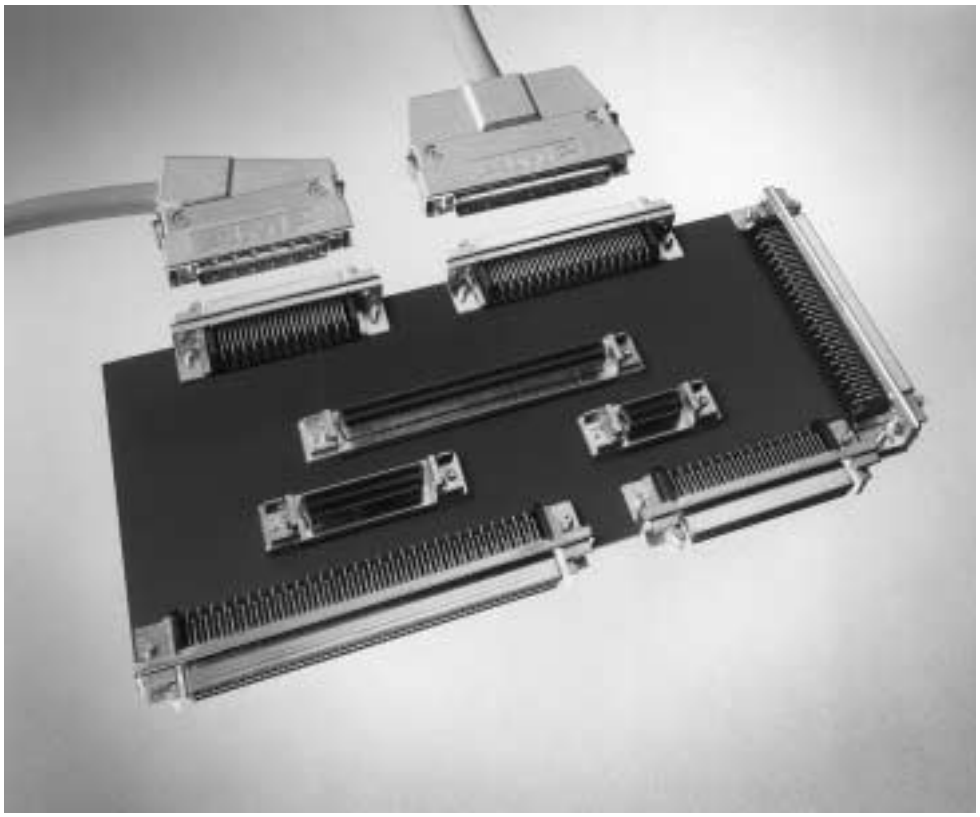

Shielded AMPLIMITE .050 Series connectors offer a high-density D type interface. Featuring .050 x .100 [1.27 x 2.54] contact centerline spacing, these compact and reliable connectors are available in 20 through 120 positions. Their construction offers exceptional EMI/RFI shielding effectiveness.

Shielded AMPLIMITE .050 Series Connectors, Series III, are approved to SCSI-2, SCSI-3, EIA RS-232, ISO-11569*, IPI-2, HIPPI, and IEE 802.3 MII standards.

Connectors are available in cable-mount and panel mount versions and vertical and right-angle mount pcb headers plus vertical mount with ACTION PIN contacts. The headers feature high temperature housings for reflow soldering processes.

Cable and panel connectors use insulation displacement contacts for fast termination of discrete, round-to-flat laminated, and ribbon cable.

Backshells are available with either a straight or angled cable exit. Hardware includes a choice of integral squeeze-to-release latches or jackscrews.

Unshielded, All-Plastic Cable Plugs are available in 50 through 100 positions and offer an economical answer to your connector needs on applications where EMI/RFI protection is not a factor.

AMPLIMITE .050 Series Right-Angle Receptacle Headers With Rails and Latch Blocks, Series III

.100 [2.54] and .120 [3.05] Solder Tail Length



Without Boardlocks



With Boardlocks

Material:

Housing—Thermoplastic, 94V-0 rated, black. SMT compatible

Shell—Steel, plated bright nickel over copper

Bracket—Zinc, plated nickel over copper

Contacts—Phosphor bronze, duplex plated .000030 [0.00076] min. gold on mating end; tin-lead on solder end; all underplated nickel

Technical Documents:

Product Specification
108-1228

Application Specification
114-40029

Note: Extra pin contact protection is provided by rails, which facilitate a straight-out, unmating motion. A side-to-side rocking motion should not be used to disengage the connector system.

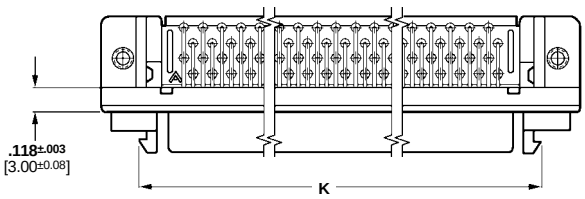

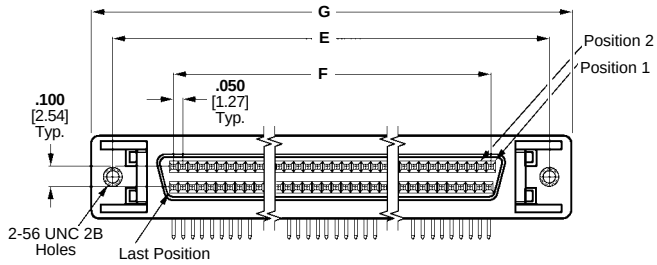

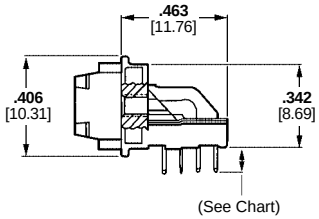

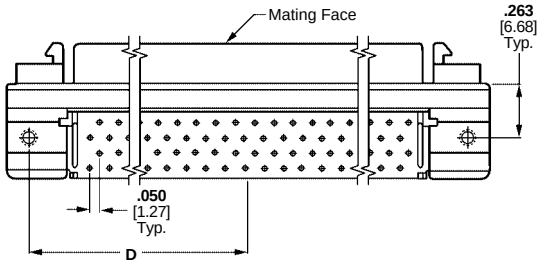

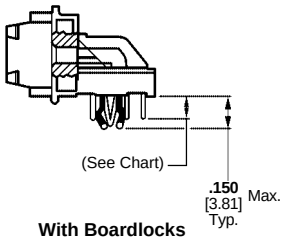

With Boardlocks

No. of Positions	Dimensions					Part Numbers	
						With .100 [2.54] Solder Tails	
	D	E	F	G	K	Without Boardlocks	With Boardlocks
26	**.615** 15.62	**1.230** 31.24	**.600** 15.24	**1.465** 37.21	**1.065** 27.05	787190-2	787171-2
40	**.790** 20.07	**1.580** 40.13	**.950** 24.13	**1.815** 46.10	**1.415** 35.94	—	787171-4
50	**.915** 23.24	**1.830** 46.48	**1.200** 30.48	**2.065** 52.45	**1.665** 42.29	787190-5	787171-5
50	**.915** 23.24	**1.830** 46.48	**1.200** 30.48	**2.065** 52.45	**1.665** 42.29	—	787266-5*
68	**1.140** 28.96	**2.280** 57.91	**1.650** 41.91	**2.515** 63.88	**2.115** 53.72	787190-7	787171-7
100	**1.540** 39.12	**3.080** 78.23	**2.450** 62.23	**3.315** 84.20	**2.915** 74.04	—	787171-9

*__Part Number__ 787266-5 has 4-40 threaded mating holes (2 places), for use with female screwlock Part Number 750644-1.

Products for Industrial & Commercial Applications
Dimensions are shown for reference purposes only.
Dimensions are in inches and millimeters unless otherwise specified. Values in brackets are metric equivalents.
Specifications subject to change.
Technical Support Center
1-800-522-6752
www.tycoelectronics.com

AMPLIMITE .050 Series Right-Angle Receptacle Headers Without Rails and Latch Blocks, Series III

.100 [2.54] and .120 [3.05] Solder Tail Lengths

For use with jackscrew mating hardware



Without Boardlocks

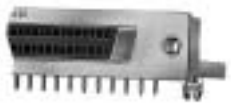

With Boardlocks

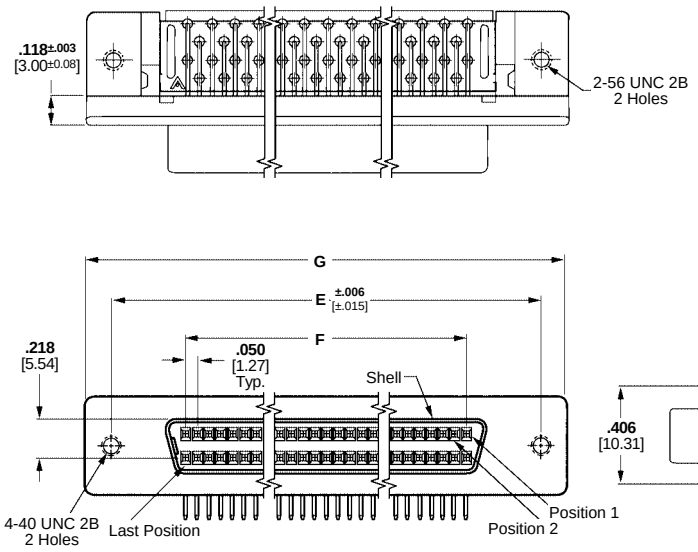

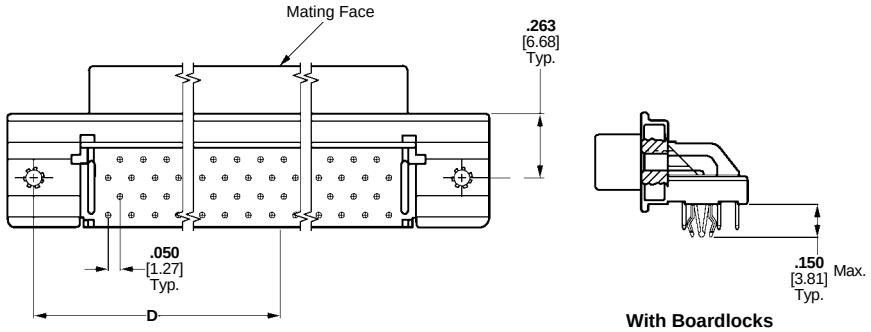

With Boardlocks

Material:

Housing—Thermoplastic, 94V-0 rated, black. SMT compatible

Shell—Steel, plated bright nickel over copper

Bracket—Zinc, plated nickel over copper

Contacts—Phosphor bronze, duplex plated .000030 [0.00076] min. gold on mating end; tin-lead on solder end; all underplated nickel

Related Product Data:

Required Hardware—page 1017, screwlocks

Technical Documents:

Product Specification
108-1228

Application Specification
114-40029

No. of Positions	Dimensions				Part Numbers		
					With .100 [2.54] Solder Tails		With .120 [3.05] Solder Tails
	D	E	F	G	Without Boardlocks	With Boardlocks	With Boardlocks
40	**.790** 20.07	**1.580** 40.13	**.950** 24.13	**1.815** 46.10	—	787170-4	787362-4
50	**.915** 23.24	**1.830** 46.48	**1.200** 30.48	**2.065** 52.45	787169-5	787170-5	787362-5
68	**1.140** 28.96	**2.280** 57.91	**1.650** 41.91	**2.515** 63.88	787169-7	787170-7	787362-7
100	**1.540** 39.12	**3.080** 78.23	**2.450** 62.23	**3.315** 84.20	787169-9	787170-9	787362-9

Note: Female screwlocks must be used to mate with cable assemblies with male jackscrew hardware.

Products for Industrial & Commercial Applications
Dimensions are shown for reference purposes only.
Dimensions are in inches and millimeters unless otherwise specified. Values in brackets are metric equivalents.
Specifications subject to change.
Technical Support Center
1-800-522-6752
www.tycoelectronics.com

AMPLIMITE .050 Series Right-Angle Receptacle Headers Without Rails—With Latch Blocks, Series III

.100 [2.54] and .120 [3.05] Solder Tail Lengths



Without Boardlocks



With Boardlocks

Material:

Housing—Thermoplastic, 94V-0 rated, black. SMT compatible

Shell—Steel, plated bright nickel over copper

Bracket—Zinc, plated nickel over copper

Contacts—Phosphor bronze, duplex plated .000030 [0.00076] min. gold on mating end; tin-lead on solder end; all underplated nickel

Related Product Data:

Hardware—page 1017

Technical Documents:

Product Specification
108-1228

Application Specification
114-40029

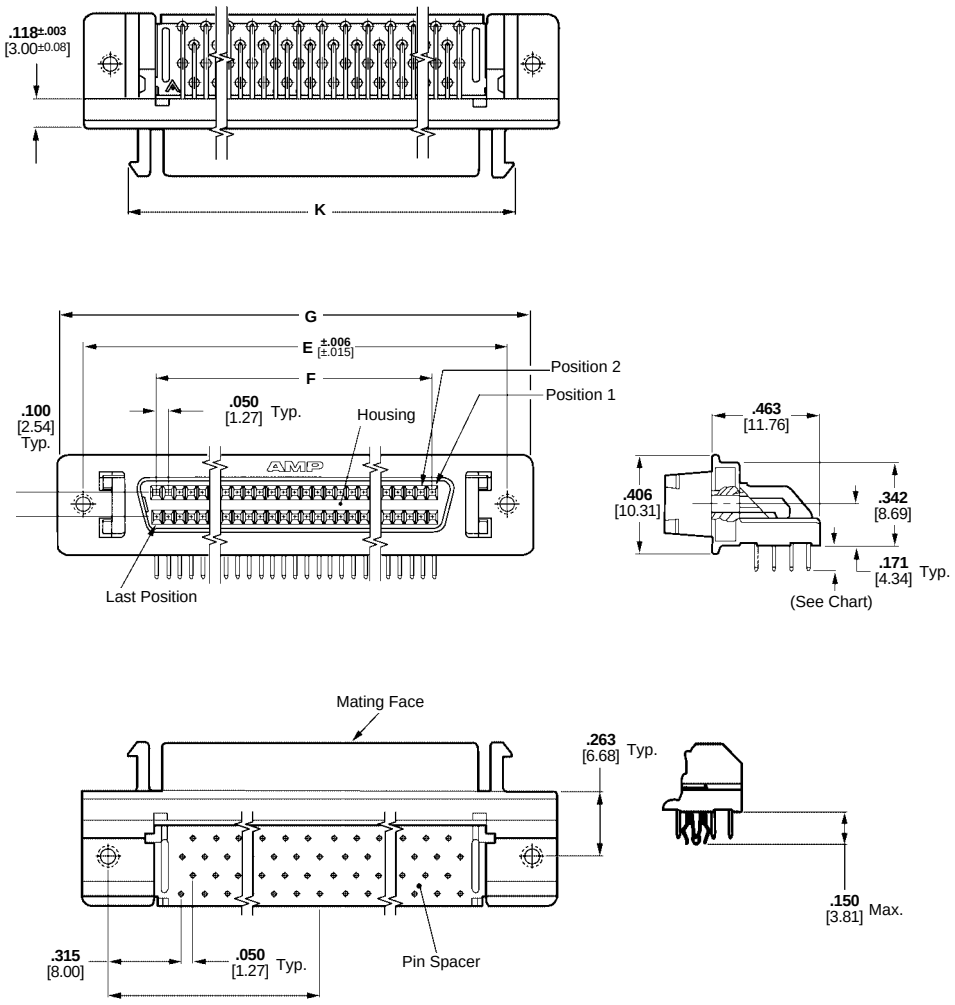

No. of Positions	Dimensions					Part Numbers		
						With .100 [2.54] Solder Tails		With .120 [3.05] Solder Tails
	D	E	F	G	K	Without Boardlocks	With Boardlocks	With Boardlocks
26	**.615** 15.62	**1.230** 31.24	**.600** 15.24	**1.465** 37.21	**1.065** 27.05	787394-2	787082-2	—
28	**.640** 16.26	**1.280** 32.51	**.650** 16.51	**1.515** 38.48	**1.115** 28.32	787394-3	787082-3	—
50	**.915** 23.24	**1.830** 46.48	**1.200** 30.48	**2.065** 52.45	**1.665** 42.29	787394-5	787082-5	787083-5
50	**.915** 23.24	**1.830** 46.48	**1.200** 30.48	**2.065** 52.45	**1.665** 42.29	—	787395-5*	—
68	**1.140** 28.96	**2.280** 57.91	**1.650** 41.91	**2.515** 63.88	**2.115** 53.72	787394-7	787082-7	787083-7
100	**1.540** 39.12	**3.080** 78.23	**2.450** 62.23	**3.315** 84.20	**2.915** 74.04	—	787082-9	—

*__Part Number__ 787395-5 has 4-40 threaded mating holes (2 places), for use with female screwlock __Part Number__ 750644-1.

AMPLIMITE .050 Series Vertical Receptacle Headers With Rails and Latch Blocks, Series III

.125 [3.18] Solder Tail Length



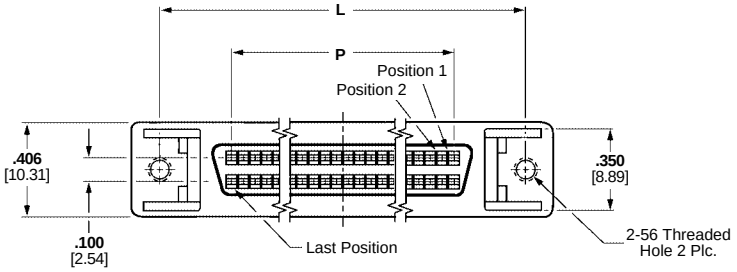

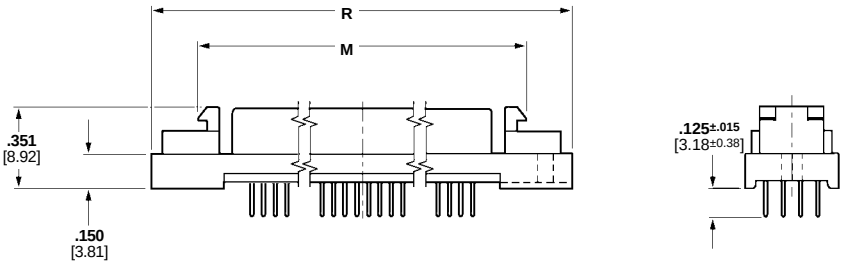

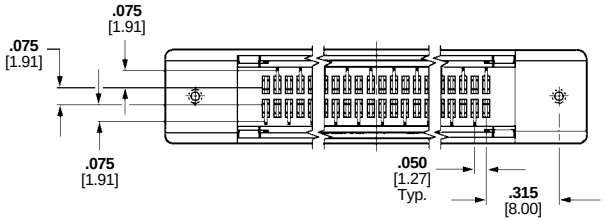

Material:

Housing—Thermoplastic, 94V-0 rated, black. SMT compatible

Shell—Steel, plated bright nickel over copper

Bracket—Zinc, plated nickel over copper

Contacts—Phosphor bronze, duplex plated .000030 [0.00076] min. gold on mating end; tin-lead on solder end; all underplated nickel

Technical Documents:

Product Specification
108-1228

Application Specification
114-40029

Note: Extra pin contact protection is provided by rails, which facilitate a straight-out, unmating motion. A side-to-side rocking motion should not be used to disengage the connector system.

No. of Positions	Dimensions				Part Numbers
	L	M	P	R	
20	**1.080** 27.43	**.915** 23.24	**.450** 11.43	**1.315** 33.40	749069-1
26	**1.230** 31.24	**1.065** 27.05	**.600** 15.24	**1.465** 37.21	749069-2
40	**1.580** 40.13	**1.415** 35.94	**.950** 24.13	**1.815** 46.10	749069-4
50	**1.830** 46.48	**1.665** 42.29	**1.200** 30.48	**2.065** 52.45	749069-5
68	**2.280** 57.91	**2.115** 53.72	**1.650** 41.91	**2.515** 63.88	749069-7
100	**3.080** 78.23	**2.915** 74.04	**2.450** 62.23	**3.315** 84.20	749069-9

Products for Industrial & Commercial Applications
Dimensions are shown for reference purposes only.
Dimensions are in inches and millimeters unless otherwise specified. Values in brackets are metric equivalents.
Specifications subject to change.
Technical Support Center
1-800-522-6752
www.tycoelectronics.com

AMPLIMITE .050 Series Vertical Receptacle Headers Without Rails and Latch Blocks, Series III

.125 [3.18] Solder Tail Length

For use with jackscrew mating hardware



Material:

Housing—Thermoplastic, 94V-0 rated, black. SMT compatible

Shell—Steel, plated bright nickel over copper

Bracket—Zinc, plated nickel over copper

Contacts—Phosphor bronze, duplex plated .000030 [0.00076] min. gold on mating end; tin-lead on solder end; all underplated nickel

Related Product Data:

Required Hardware—page 1017, screwlocks

Technical Documents:

Product Specification
108-1228

Application Specification
114-40029

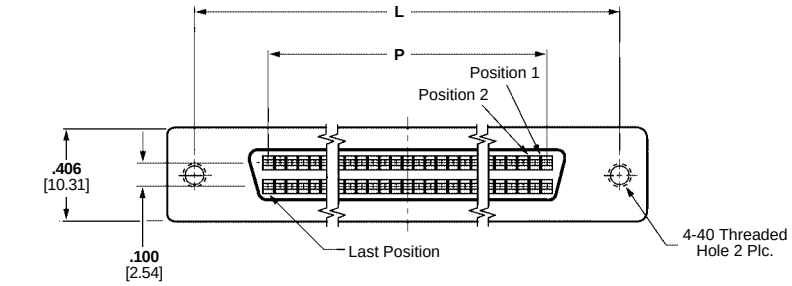

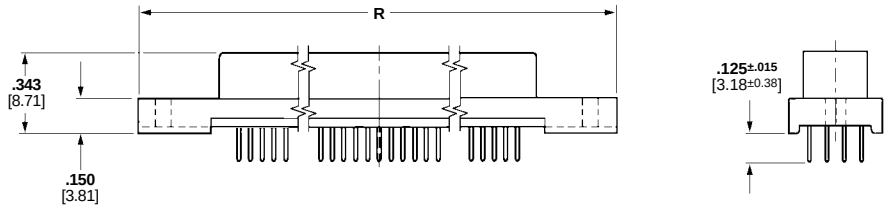

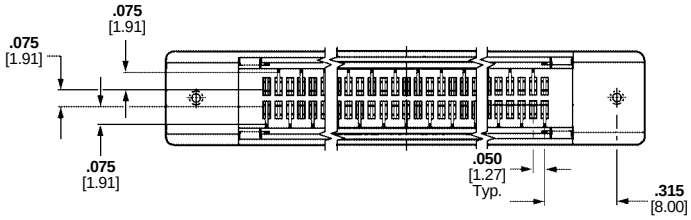

No. of Positions	Dimensions			Part Numbers
	L	P	R	
50	**1.830** 46.48	**1.200** 30.48	**2.065** 52.45	749070-5
68	**2.280** 57.91	**1.650** 41.91	**2.515** 63.88	749070-7
100	**3.080** 78.23	**2.450** 62.23	**3.315** 84.20	749070-9

Note: Female screwlocks must be used to mate with cable assemblies with male jackscrew hardware.

AMPLIMITE .050 Series Vertical Receptacle Headers With Rails and Latch Blocks, Series III

.173 [4.39] and .280 [7.11] Lengths, ACTION PIN Tails



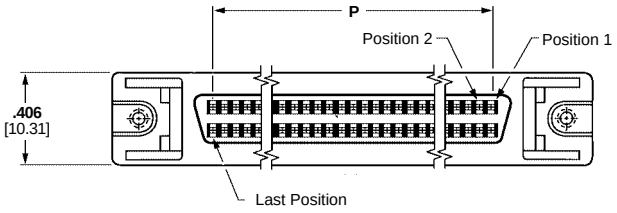

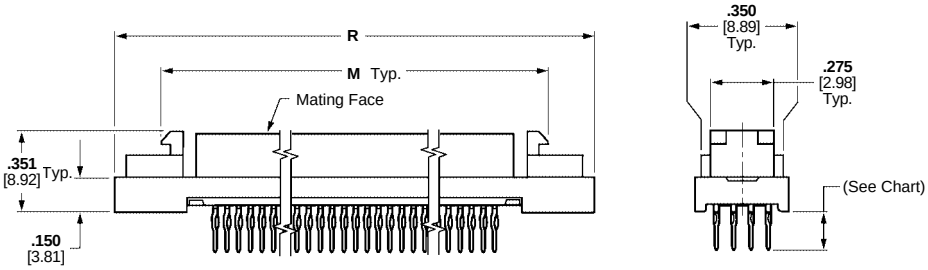

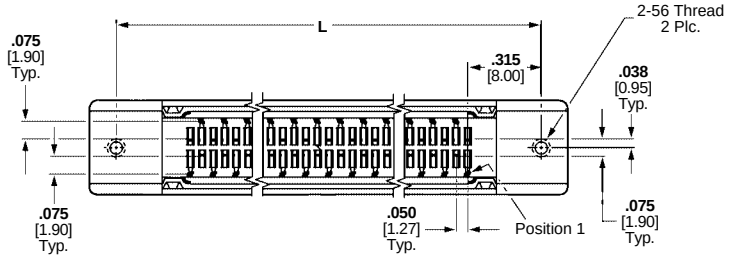

Material:

Housings—Thermoplastic, 94V-0 rated, black, SMT compatible

Shell—Carbon steel, plated bright nickel over copper

Bracket—Zinc, plated nickel over copper

Contacts—Phosphor bronze, duplex plated .000030 [0.00076] min. gold on mating end; tin-lead on solder end; all underplated nickel

Technical Documents:

Product Specification
108-1228-2

Application Specification
114-40029

Note: Extra pin contact protection is provided by rails, which facilitate a straight-out unmating motion. A side-to-side rocking motion should not be used to disengage the connector system.

No. of Positions	Dimensions				Part Numbers	
	L	M	P	R	With .173 [4.39] ACTION PIN Contacts	With .280 [7.11] ACTION PIN Contacts
20	**1.080** 27.43	**.915** 23.24	**.450** 11.43	**1.315** 33.40	786554-1	—
26	**1.230** 31.34	**1.065** 27.05	**.600** 15.24	**1.465** 37.21	786554-2	—
50	**1.830** 46.48	**1.665** 42.29	**1.200** 30.48	**2.065** 52.45	786554-5	786556-5
68	**2.280** 57.91	**2.115** 53.72	**1.650** 41.91	**2.515** 63.88	786554-7	786556-7
100	**3.080** 78.23	**2.915** 74.04	**2.450** 62.23	**3.315** 84.20	786554-9	—
120	**3.580** 90.93	**3.415** 86.74	**2.950** 74.93	**3.815** 96.90	1-786554-0	1-786556-0

Products for Industrial & Commercial Applications
Dimensions are shown for reference purposes only.
Dimensions are in inches and millimeters unless otherwise specified. Values in brackets are metric equivalents.
Specifications subject to change.
Technical Support Center
1-800-522-6752
www.tycoelectronics.com

AMPLIMITE .050 Series Vertical Receptacle Headers Without Rails and Latch Blocks, Series III

.173 [4.39] and .280 [7.11] Lengths, ACTION PIN Tails

For use with jackscrew mating hardware



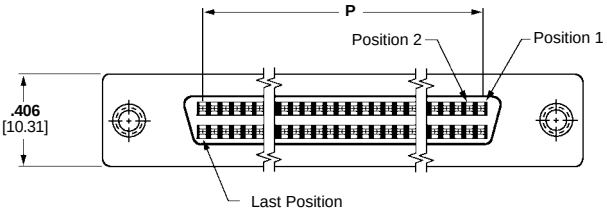

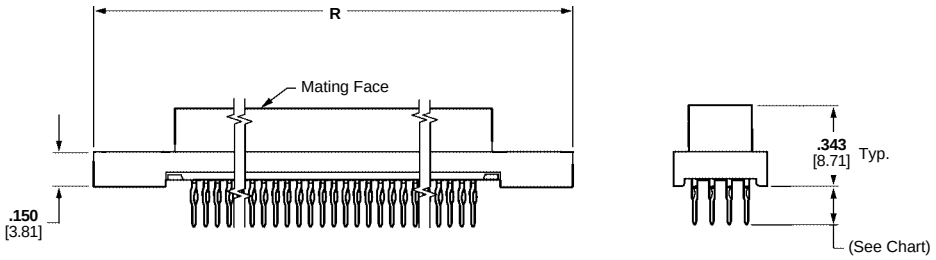

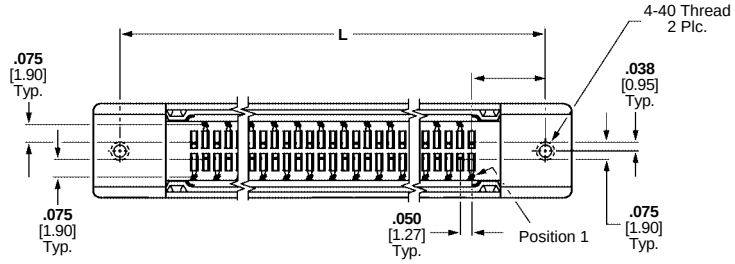

Material:

Housings—Thermoplastic, 94V-0 rated, black, SMT compatible

Shell—Carbon steel, plated bright nickel over copper

Bracket—Zinc, plated nickel over copper

Contacts—Phosphor bronze, duplex plated .000030 [0.00076] min. gold on mating end; tin-lead on solder end; all underplated nickel

Related Product Data:

Required Hardware—page 1017, screwlocks

Technical Documents:

Product Specification
108-1228-2

Application Specification
114-40029

No. of Positions	Dimensions			Part Numbers	
	L	P	R	With .173 [4.39] ACTION PIN Contacts	With .280 [7.11] ACTION PIN Contacts
50	**1.830** 46.48	**1.200** 30.48	**2.065** 52.45	786555-5	786557-5
68	**2.280** 57.91	**1.650** 41.91	**2.515** 63.88	786555-7	786557-7
100	**3.080** 78.23	**2.450** 62.23	**3.315** 84.20	786555-9	786557-9

Products for Industrial & Commercial Applications
Dimensions are shown for reference purposes only.
Dimensions are in inches and millimeters unless otherwise specified. Values in brackets are metric equivalents.
Specifications subject to change.
Technical Support Center
1-800-522-6752
www.tycoelectronics.com

AMPLIMITE .050 Series Cable Plug Connectors, Series III

Shielded Plugs



Shielded Plug



Wire Lacing Termination Covers

Material:

Housing and Covers—Thermoplastic, 94V-0 rated, black or gray

Contacts—Phosphor bronze, duplex plated .000030 [0.00076] min. gold on mating end, tin-lead on termination end, all underplated .nickel

Shell—Steel, plated tin-nickel alloy over nickel over min. copper

Recommended wire size—28 AWG [0.08-0.09mm²] or 30 AWG [0.05mm²], solid or 7 strand, with a .029-.036 [0.74-0.89] insulation diameter.

Technical Documents:

Product Specification
108-1228

Application Specification
114-40029

Instruction Sheet
408-9427

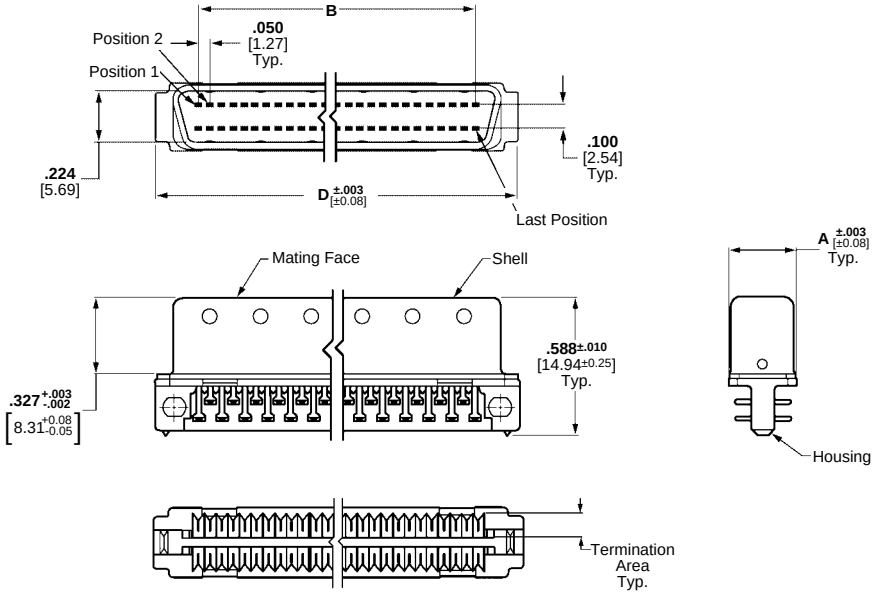

Shielded Plug with Unassembled Wire Lacing Termination Covers

Connector With Unassembled Wire Lacing Termination Covers

No. of Positions	Dimensions			Part Numbers	
	A	B	D	.032-.036 [0.81-0.91] Outer Wire Dia. Black	.029-.031 [0.74-0.79] Outer Wire Dia. Gray
26	**.293** 7.44	**.600** 15.24	**.979** 24.87	750913-2	1-750913-2
40	**.293** 7.44	**.950** 24.13	**1.329** 33.76	750913-4	1-750913-4
50	**.293** 7.44	**1.200** 30.48	**1.579** 40.11	750913-5	1-750913-5
68	**.293** 7.44	**1.650** 41.91	**2.029** 51.54	750913-7	1-750913-7
100	**.373** 9.47	**2.450** 62.23	**2.829** 71.86	—	1-750913-9

Notes: [1] Plug connector requires backshell kit for complete assembly. Refer to pages 1014-1016 for backshell kit part numbers.
[2] For termination, cover closing and wire lacing tooling, see page 1019.

Products for Industrial & Commercial Applications
Dimensions are shown for reference purposes only.
Dimensions are in inches and millimeters unless otherwise specified. Values in brackets are metric equivalents.
Specifications subject to change.
Technical Support Center
1-800-522-6752
www.tycoelectronics.com

AMPLIMITE .050 Series Cable Plug Connectors, Series III

Shielded Plugs



Wire Lacing Termination Covers

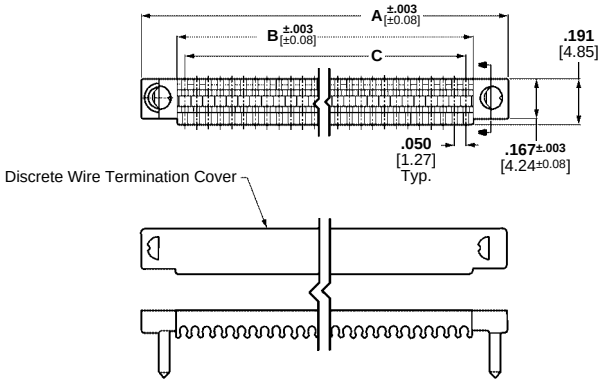

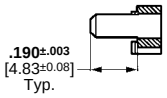

Wire Lacing Termination Covers

Wire Lacing Covers Only

No. of Positions	Dimensions A	Dimensions B	Dimensions C	Part Numbers .032-.036 [0.81-0.91] Outer Wire Dia. (Black)	Part Numbers .029-.031 [0.74-0.79] Outer Wire Dia. (Gray)
26	**.965** 24.51	**.664** 16.87	**.600** 15.24	750877-2	1-750877-2
40	**1.315** 33.40	**1.014** 25.76	**.950** 24.13	750877-4	1-750877-4
50	**1.565** 39.75	**1.264** 32.11	**1.200** 30.48	750877-5	1-750877-5
68	**2.015** 51.18	**1.714** 43.54	**1.650** 41.91	750877-7	1-750877-7
100	**2.815** 71.50	**2.514** 63.86	**2.450** 62.23	—	1-750877-9

Note: Two covers required per connector assembly.

AMPLIMITE .050 Series Connector Application Tooling for Use with Wire Lacing Termination Covers

Manual Arbor Frame Assembly—
Part Number 58024-1

Equipped with Cover Lacing Assembly—
Part Number 91293-1
(Includes Seating Bars for 50 and 100 Positions). See Table 3 for Seating Bar Part Numbers.

Extra Lacing Stations available for use with Lacing Assembly—
Part Number 91293-1
Order Lower Tooling Assembly—
Part Number 543481-1

Note: AMP Manual Miniature Applicator Frame Assembly, Cover Closing Kit, and Staple Insertion Kit each must be ordered separately by part number.



Arbor Frame, Part Number 58024-1
Equipped with Cover Lacing Assembly, Part Number 91293-1



Lower Tooling Assembly Part Number 543481-1



Miniature Applicator Frame Assembly Part Number 91295-1
Equipped with Cover Closing Kit Part Number 543508-1



Seatings Bars

Table Number 3

No. of Positions	Seating Bar Part No.
26	543494-2
40	543494-3
50	543494-1
68	543502-2
100	543502-1

Note: All Tooling must be ordered separately by part number.

AMPLIMITE .050 Series Cable Receptacle Connectors, Series III

Shielded Receptacles



Shielded Receptacle with Assembled Termination Covers

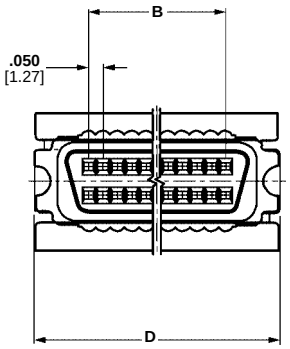

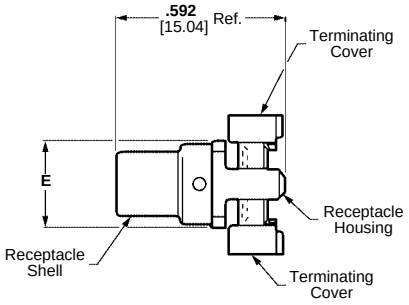

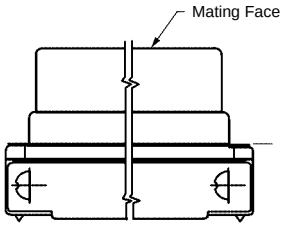

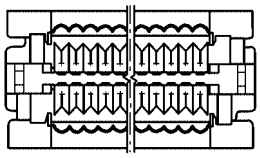

Material:

Housing and Covers—Thermoplastic, 94V-0 rated, black

Contacts—Phosphor bronze, duplex plated .000030 [0.00076] min. gold on mating end,tin-lead on termination end, all underplated nickel

Shell—Steel, plated bright tin-lead over copper

Recommended wire size—28 AWG [0.08-0.09mm²] or 30 AWG [0.05mm²], solid or 7 strand, with a .029-.036 [0.74-0.89] insulation diameter.

Technical Documents:

Product Specification
108-1228

Application Specification
114-40029

Products for Industrial & Commercial Applications
Dimensions are shown for reference purposes only.
Dimensions are in inches and millimeters unless otherwise specified. Values in brackets are metric equivalents.
Specifications subject to change.
Technical Support Center
1-800-522-6752
www.tycoelectronics.com

AMPLIMITE .050 Series Cable Receptacle Connectors, Series III

Shielded Receptacles



Shielded Receptacle with Unassembled Termination Covers



Wire Lacing Termination Covers

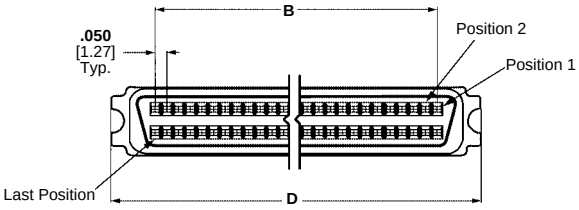

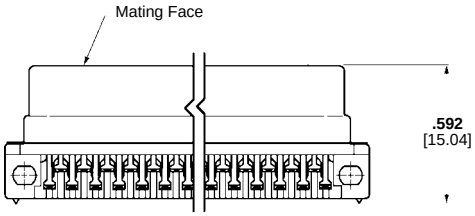

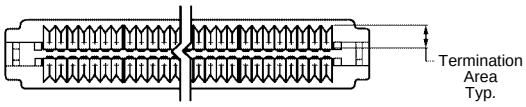

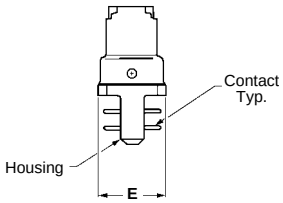

No. of Positions	Dimensions			Part Numbers		
				Connectors With Standard Termination Covers		Connectors With Unasembled Wire Lacing Termination Covers
	B	D	E	Assembled Covers	Unassembled Covers	.032-.036 [0.81-.036] Outer Wire Dia.
40	**.950** 24.13	**1.329** 33.76	**.293** 7.44	—	749699-4	—
50	**1.200** 30.48	**1.579** 40.11	**.293** 7.44	749210-5	749699-5	—
68	**1.650** 41.91	**2.029** 51.54	**.293** 7.44	749210-7	749699-7	786860-7
100	**2.450** 62.23	**2.829** 71.86	**.373** 9.47	—	749699-8	—

Notes: [1] Receptacle connector requires backshell kit for complete assembly. Refer to pages 1014-1016 for backshell kit part numbers.
[2] For termination, cover closing and wire lacing tooling, see page 1011.
[3] For Termination Tooling other than Wire Lacing see pages 1018, 1019.

Products for Industrial & Commercial Applications
Dimensions are shown for reference purposes only.
Dimensions are in inches and millimeters unless otherwise specified. Values in brackets are metric equivalents.
Specifications subject to change.
Technical Support Center
1-800-522-6752
www.tycoelectronics.com

AMPLIMITE .050 Series Shielded Backshell Kits, With Jackscrews, Series III

Straight Exit with Jackscrews



Straight Exit
Male Jackscrews
Style A



Straight Exit
Male Jackscrews
Style B



Straight Exit
Female Jackscrews
Style A

Style A Straight Exit Male Jackscrews

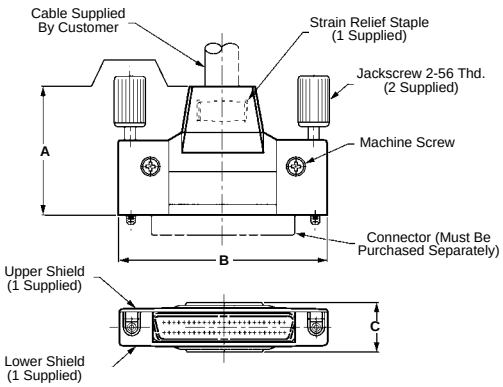

Style B Straight Exit Male Jackscrews

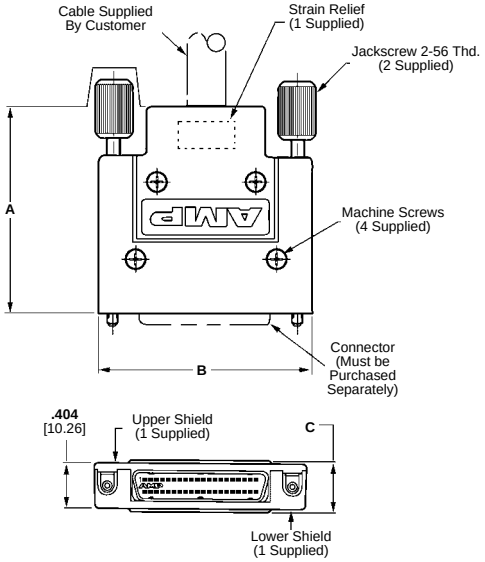

Style A Straight Exit Female Jackscrews

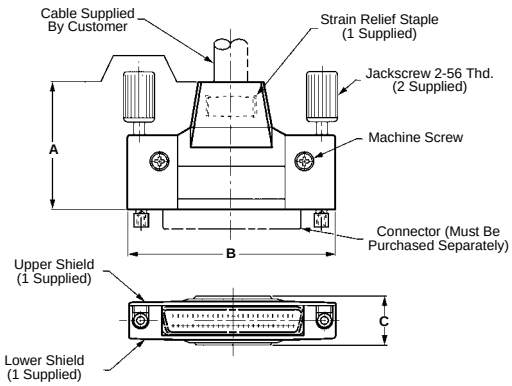

Material:

Jackscrews—Stainless steel or steel, black electroless nickel plated
Jackscrew Caps—Polyolefin or PVC, black
2-56 Screws—Stainless steel
Backshell—Zinc, plated nickel over copper
Strain Relief Staple—Steel, plated tin-lead over nickel

Technical Documents:

Product Specification
108-1228
Application Specification
114-40029
Instruction Sheet
408-9427

No. of Positions	Style	Dimensions			Part Numbers			
		A	B	C	Pkg.	Max. O.D.	Male with #2-56 Threads	Female with #2-56 Threads
40	B	**1.822** 46.25	**1.830** 46.48	**.456** 11.58	Bulk	**.450** 11.43	787543-1	787543-7
					Bulk	**.400** 10.16	787543-2	787543-8
					Bulk	**.350** 8.89	787543-3	787543-9
50	A	**1.270** 32.26	**2.085** 52.96	**.480** 12.19	Individual	**.400** 10.16	749080-1	—
					Bulk	**.400** 10.16	749080-2	—
100	A	**1.695** 43.05	**3.325** 84.46	**.595** 15.11	Individual	**.500** 12.70	749081-1	—
100	A	**2.082** 52.88	**3.325** 84.46	**.615** 15.62	Individual	**.500** 12.70	749854-1	—

Notes: [1] Each backshell kit includes upper and lower backshells, two male or female jackscrews, one strain relief staple and two or four #2-56 screws. All are packaged unassembled.
[2] For Staple Insertion Tooling see page 1019.

Products for Industrial & Commercial Applications
Dimensions are shown for reference purposes only.
Dimensions are in inches and millimeters unless otherwise specified. Values in brackets are metric equivalents.
Specifications subject to change.
Technical Support Center
1-800-522-6752
www.tycoelectronics.com

AMPLIMITE .050 Series Shielded Backshell Kits, With Spring Latches, Series III



Style A Straight Exit with Latches



Style A Angled Exit with Latches



Style B Straight Exit with Latches

Style A Straight Exit with Latches

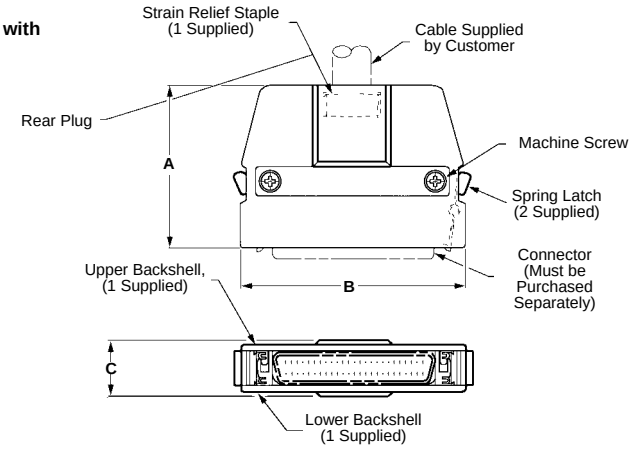

Style A Angled Exit with Latches

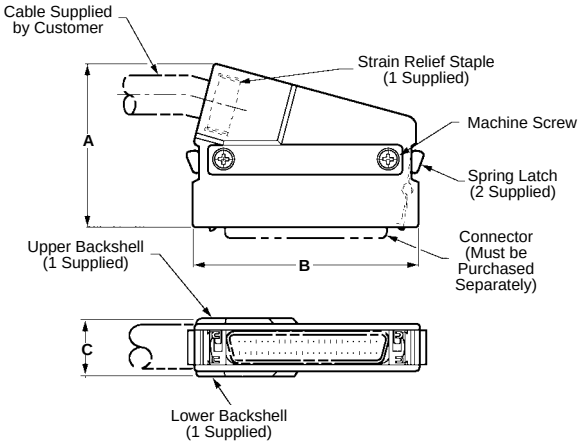

Style B Straight Exit with Latches

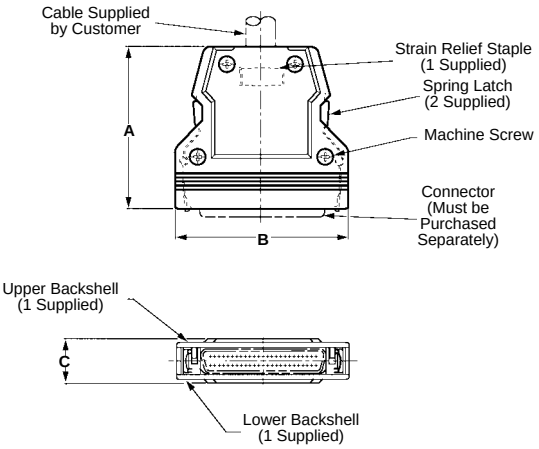

Material:

Backshell—Zinc, plated nickel over copper

Spring Latch—Stainless steel

2-56 Screws—Stainless steel

Strain Relief Staple—Steel, plated tin-lead over nickel

Technical Documents:

Product Specification
108-1228

Application Specification
114-40029

Instruction Sheet
408-9427

Note: Extra pin contact protection is provided by rails on the receptacle, which facilitate a straight-out unmating motion. A side-to-side rocking motion should not be used to disengage the connector system.

AMPLIMITE .050 Series Shielded Backshell Kits, With Spring Latches, Series III

Straight and Angled Exit RFI/EMI Shields (Two-Piece) for Jacketed Cable

No. of Positions	Style	Dimensions			Max. O.D.	Part Numbers	
		A	B	C		Straight with Latches	Angled with Latches
20	A	**1.290** 32.77	**1.215** 30.86	**.400** 10.16	**.270** 6.86	749190-1	749199-1
26	B	**1.290** 32.77	**1.335** 33.91	**.400** 10.16	**.270** 6.86	749608-1	—
26	A	**1.290** 32.77	**1.365** 34.67	**.400** 10.16	**.270** 6.86	—	749609-1
40	A	**1.290** 32.77	**1.715** 43.56	**.400** 10.16	**.320** 8.13	—	749201-1
40	A	**1.290** 32.77	**1.715** 43.56	**.409** 10.39	**.320** 8.13	749192-1	—
50	A	**1.395** 35.43	**1.965** 49.91	**.480** 12.19	**.355** 9.02	749193-1	—
50	A	**1.395** 35.43	**1.965** 49.91	**.480** 12.19	**.400** 10.16	749193-2	749202-2
50	B	**1.800** 45.72	**1.965** 49.91	**.492** 12.50	**.480** 12.19	749889-3	—
68	A	**1.405** 35.69	**2.415** 61.34	**.520** 13.21	**.400** 10.16	—	749204-1
68	A	**1.405** 35.69	**2.415** 61.34	**.520** 13.21	**.440** 11.18	749195-2	749204-2
80	A	**1.600** 40.64	**2.715** 68.96	**.565** 14.35	**.420** 10.67	—	749205-1
80	A	**1.600** 40.64	**2.715** 68.96	**.565** 14.35	**.500** 12.70	749196-2	—
100	A	**1.725** 43.82	**3.215** 81.66	**.615** 15.62	**.500** 12.70	—	749206-1

Notes: [1] Each backshell kit includes upper and lower backshells, two spring latches, one strain relief staple and two or four 2-56 screws. All are packaged unassembled.
[2] For staple insertion tooling see page 1019.
[3] 50 and 68 positions meet SCSI-2 standards.

Products for Industrial & Commercial Applications
Dimensions are shown for reference purposes only.
Dimensions are in inches and millimeters unless otherwise specified. Values in brackets are metric equivalents.
Specifications subject to change.
Technical Support Center
1-800-522-6752
www.tycoelectronics.com

AMPLIMITE .050 Series Hardware Series III

Screwlock Kits



Male
Part Number 749086-1
(Includes two screwlocks)



Female
(Includes two screwlocks)

Dim. A	Dim. B	Part Number
.562 14.27	**.157** 3.99	749087-1
.380 9.65	**.157** 3.99	749087-2[1]

[1] Recommended for right-angle board mount connectors.

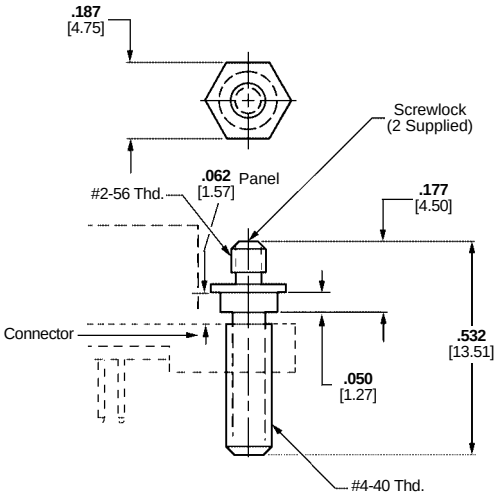

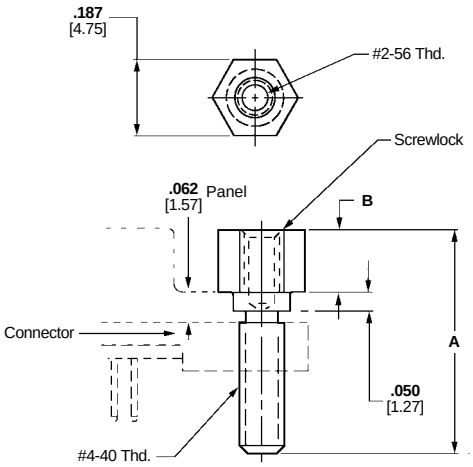

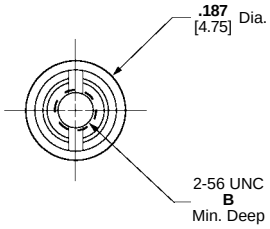

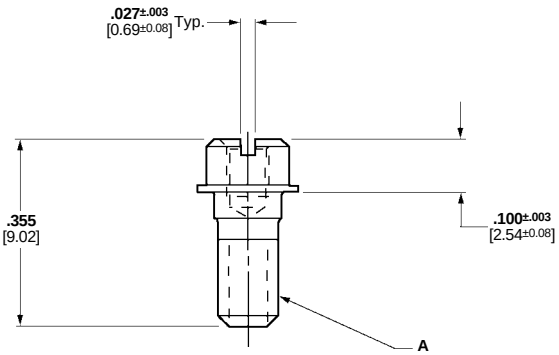

Material:

Stainless steel (female)
Steel, zinc plated black (male)

Related Product Data:

Used with the following connectors:

Right-Angle Receptacle Header—
pages 1003-1005

Vertical Receptacle Header—
pages 1006, 1007

Technical Documents:

Product Specification
108-1228

Application Specification
114-40029



Female
(Includes two screwlocks)

Thread Size A	Thread Size B	Part Numbers
4-40	**.110** 2.79	750644-1
2-56	**.090** 2.29	786585-2

Recommended for pc board mount or panel mount connectors with latches or latches and rails. Permits cable connectors to be spring latch-type or jackscrew-type

AMPLIMITE .050 Series Application Tooling, Series III

To meet medium to high volume production of dis-crete wire terminations, AMP offers the following tooling:

The CHAMPOMATOR Model 2.5 Bench Terminating Machine—
Part Number 354786-1,
used in conjunction with Control Module—
Part Number 852423-☐,
and Tie Bar—
Part Number 762637-☐
(Table No. 1).



Control Module
Part Numbers 852423-1 **120 VAC**
852423-2 **100 VAC**
852423-3 **230 VAC**

CHAMPOMATOR
2.5 Machine
Part Number 354786-1

Note: The CHAMPOMATOR 2.5 Machine includes plug and receptacle nests, as well as wire setup gauge.

Table Number 1

Connector Size	Tie Bar Part Numbers
20 Pos.	762637-1
26 Pos.	1-762637-1
28 Pos.	1-762637-2
40 Pos.	762637-3
50 Pos.	762637-4
60 Pos.	762637-5
68 Pos.	762637-6
80 Pos.	762637-7
100 Pos.	762637-9
120 Pos.	1-762637-0

Discrete Wire Application Tooling

For low to medium volume production use the AMP Arbor Frame Assembly—
Part Number 58024-1
equipped with Applicator—
Part Number 91291-1
for .032-.036 [0.81-0.89] Conductor Insulation O.D.
and Applicator—
Part Number 91291-2
for .029-.032 [0.74-0.81] Conductor Insulation O.D.

Note: AMP Arbor Frame Assembly and Applicator Kit must be ordered separately.



Arbor Frame
Part Number 58024-1
Equipped with
Applicator Part Number 91291-☐

Products for Industrial & Commercial Applications
Dimensions are shown for reference purposes only.
Dimensions are in inches and millimeters unless otherwise specified. Values in brackets are metric equivalents.
Specifications subject to change.
Technical Support Center
1-800-522-6752
www.tycoelectronics.com

AMPLIMITE .050 Series Application Tooling, Series III

Manual Miniature Applicator Frame Assembly—
Part Number 91295-1

This Frame requires Cover Closing Kit—
Part Number 543508-1

Cable Staple Tooling

To provide cable strain relief use Manual Miniature Applicator Frame Assembly—
Part Number 91295-1.
This Frame requires Staple Insertion Kit—
Part Number 543515-1
to install staples into lower backshells of connector kits and assemblies.



Miniature Applicator Frame Assembly
Part Number 91295-1
Equipped with Cover Closing Kit
Part Number 543508-1



Staple Insertion Kit
Part Number 543515-1
(For use with Miniature Applicator Frame Assembly
Part Number 91295-1**)**

AMPLIMITE .050 Series Connector Application Tooling for Use with Wire Lacing Terminating Covers

Manual Arbor Frame Assembly—
Part Number 58024-1

Equipped with Cover Lacing Assembly—
Part Number 91293-1
(Includes Seating Bars for 50 and 100 Positions). See Table 3 for Seating Bar Part Numbers.

Extra Lacing Stations available for use with Lacing Assembly—
Part Number 91293-1
Order Lower Tooling Assembly—
Part Number 543481-1



Lower Tooling Assembly
Part Number 543481-1



Arbor Frame, Part Number 58024-1
Equipped with
Cover Lacing Assembly, Part Number 91293-1

Note: AMP Manual Miniature Applicator Frame Assembly, Cover Closing Kit, and Staple Insertion Kit each must be ordered separately by part number.



Seatings Bars

Table Number 3

No. of Positions	Seating Bar Part Numbers
26	543494-2
50	543494-1
68	543502-2
100	543502-1

Notes: All Tooling must be ordered separately by part number. Two seating bars required per tool assembly.

Termination Tooling for .025 [0.64] Centerline Ribbon Cable

Used with Manual Arbor Tool
Part Number 91085-2,
or Pneumatic Arbor Tool
Part Number 91112-3
and Universal Base Tool
Part Number 768338-4.

No. of Positions	Plug/Receptacle Upper Tooling Kit
50 68	679235-2

HDP-22 Crimp Snap-In Contact Connectors

Product Facts:

- Approximately 65% higher density than HD-20 connectors
- Lower cost, commercial version of the AMP military approved Series 90 family
- Available with shielding overmold hardware and shielding enclosure kits
- Capable of using numerous standard HD-20 cable clamps and mating hardware
- Low cost, high performance, precision-formed crimp contacts
- Intermateable with any size 22 Subminiature D connector dimensionally complying with MIL-C-24308
- Recognized under the Component Program of Underwriters Laboratories Inc., File No. E28476
- Listed under Underwriters Laboratories Inc., Standard 1863, Communication Circuit Accessories, File No. E81956
- Certified by Canadian Standards Association, File No. LR 164196



For complete product information, order Catalog 82068

Products for Industrial & Commercial Applications
Dimensions are shown for reference purposes only.
Dimensions are in inches and millimeters unless otherwise specified. Values in brackets are metric equivalents.
Specifications subject to change.
Technical Support Center
1-800-522-6752
www.tycoelectronics.com

HDP-22 Crimp Snap-In Contact Connectors



Plug
(With Grounding Indents)



Receptacle

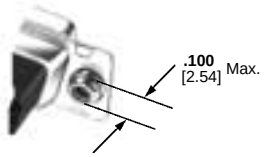

Clinch Nut
(Plug and Receptacle)

Material and Finish:

Shell—Steel, tin plated

Insert—94V-0 rated thermoplastic, black

Contacts and ferrules must be purchased separately.

Related Product Data:

Contacts—page 1025

Ferrules—page 1024

Mateable Connectors:

Cable Clamps—pages 1047-1052

Mating Hardware—pages 1058-1065

Technical Documents:

Product Specification
108-1268

Application Specification
114-10001

Instruction Sheets
408-9375, 408-9381

Note: Instruction Sheets for AMP Tooling are packaged with the tooling. For additional information call the Technical Support Center: **1-800-522-6752.**

Plug

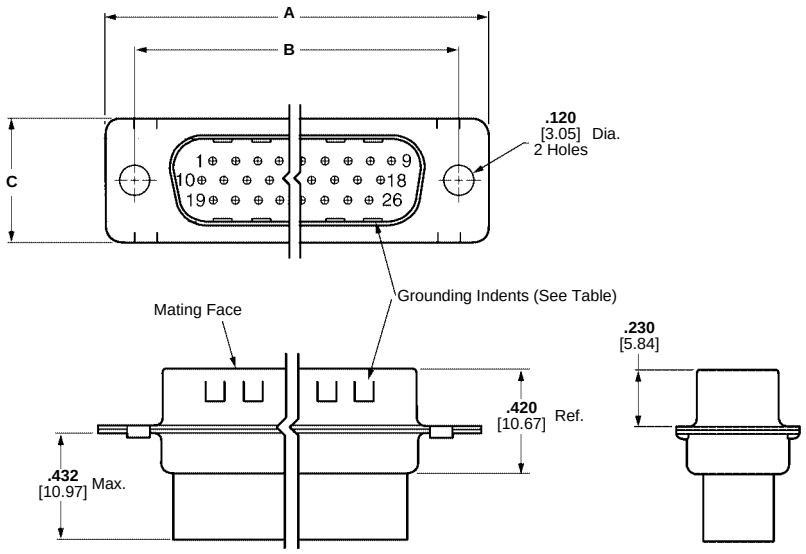

Receptacle

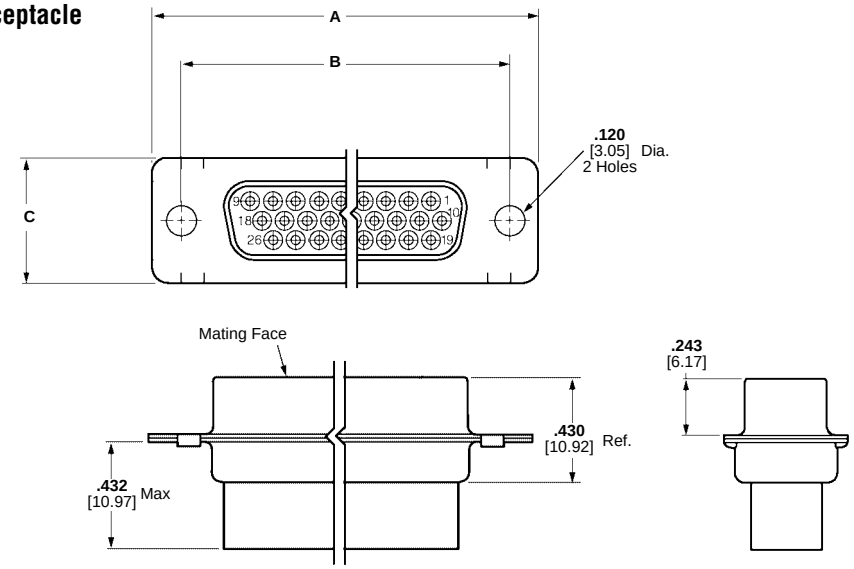

Shell Size	No. of Contact Positions	Dimensions A	Dimensions B	Dimensions C	Part Numbers: With Grounding Indents, Plug	Part Numbers: With Clinch Nuts, Plug	Part Numbers: With Grounding Indents, Receptacle	Part Numbers: With Clinch Nuts, Receptacle
1	15	**1.213** 30.81	**.984** 24.99	**.494** 12.55	748364-1	—	748565-1	748696-1
2	26	**1.541** 39.14	**1.312** 33.33	**.494** 12.55	748365-1	749717-1	748566-1	—
3	44	**2.088** 53.84	**1.852** 47.04	**.494** 12.55	748366-1	—	748567-1	786583-1
4	62	**2.729** 69.32	**2.500** 63.50	**.494** 12.55	748367-1	—	748568-1	—
5	78	**2.635** 66.93	**2.406** 61.11	**.605** 15.37	748368-1	—	748569-1	—

Note: Plugs accept size 22 DF pin contacts and receptacles accept size 22 DF socket contacts.

For complete product information, order Catalog 82068

HDP-22 Crimp Snap-In Contact Connectors

Basic Shielding Hardware Kits



Plug



Receptacle

Each kit contains:

- Connector
- Inner shield
- Outer shield

Contacts and ferrules must be purchased separately.

Material and Finish:

Connector Shell—Steel, tin plated
Connector Insert—94V-0 rated thermoplastic, black
Shields—Steel, tin plated

Related Product Data:

Contacts—page 1025
Ferrules—page 1024
Mateable Connectors—pages 1021 & 1022
Mating Hardware—pages 1058-1065

Technical Documents:

Product Specification
108-1268
Application Specifications
114-10001, 114-40030
Instruction Sheet
408-9381, 408-9010

Note: Instruction Sheets for AMP Tooling are packaged with the tooling. For additional information call the Technical Support Center: **1-800-522-6752.**

Plug

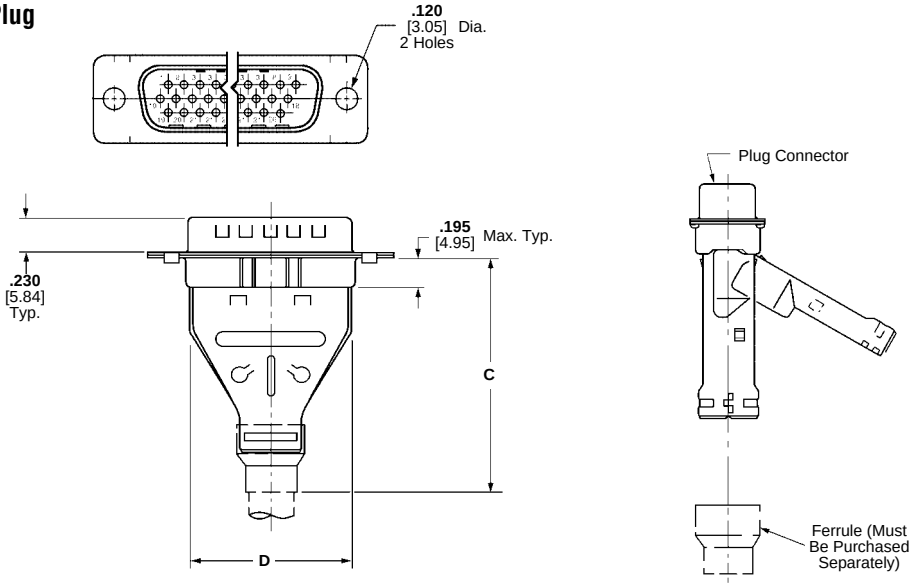

Receptacle

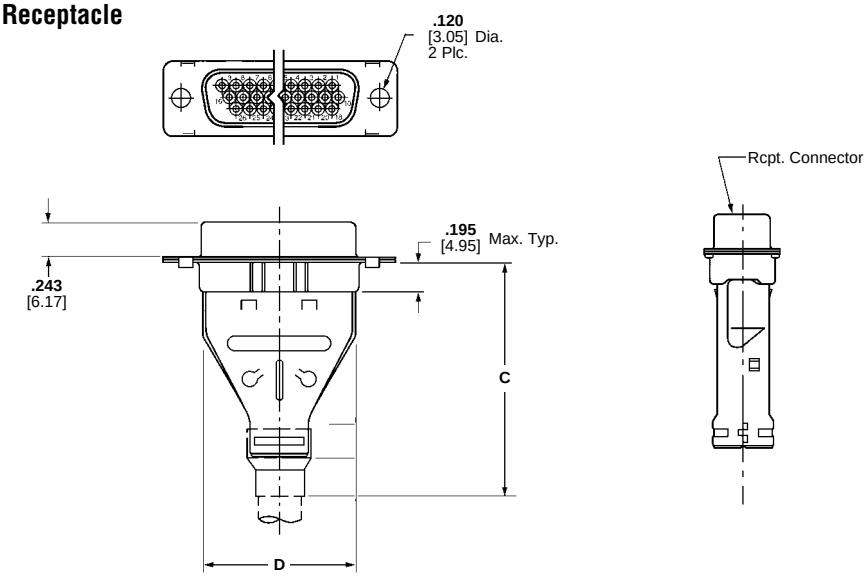

Shell Size	No. of Contact Positions	Dimensions C	Dimensions D	Recommended Cable Insulation Diameter	Max. Cable Dia.†	Kit Numbers Plug	Kit Numbers Receptacle
1	15	**1.535** 38.99	**.700** 17.78	**.165-.455** 4.19-11.56	**.350** 8.89	748468-1	748634-1
2	26	**1.535** 38.99	**1.024** 26.01	**.165-.455** 4.19-11.56	**.350** 8.89	748469-1	748635-1
3	44	**1.535** 38.99	**1.576** 40.03	**.165-.455** 4.19-11.56	**.350** 8.89	748470-1	748636-1
4	62	**1.892** 48.06	**2.215** 56.26	**.338-.562** 8.59-14.28	**.450** 11.43	748471-1	—
5	78	**1.876** 47.65	**2.120** 53.85	**.338-.490** 8.59-12.45	**.450** 11.43	748472-1	748638-1

Notes: 1. Plugs accept size 22 DF pin contacts and receptacles accept size 22 DF socket contacts.
2. Components of the kits are shipped unassembled and bulk-packaged in quantities of 100 pieces.
†Maximum cable diameter after jacket and braid removed.

For complete product information, order Catalog 82068

Products for Industrial & Commercial Applications
Dimensions are shown for reference purposes only.
Dimensions are in inches and millimeters unless otherwise specified. Values in brackets are metric equivalents.
Specifications subject to change.
Technical Support Center 1-800-522-6752 www.tycoelectronics.com

HDP-22 Crimp Snap-In Contact Connectors

Shielding Hardware Enclosure Kits



Plug



Receptacle

Each kit contains:

- Connector
- Inner shield
- Outer shield
- Enclosure
- Two jackscrews

Contacts and ferrules must be purchased separately.

Material and Finish:

Connector Shell—Steel, tin plated
Connector Insert—94V-0 rated thermoplastic, black
Shields—Steel, tin plated
Enclosure—PVC, black
Jackscrews—Zinc alloy

Related Product Data:

Contacts—page 1025
Ferrules—page 1024
Mateable Connectors—pages 1021 & 1022
Mating Hardware—pages 1058-1065

Technical Documents:

Product Specification
108-1268
Application Specifications
114-10001, 114-40030
Instruction Sheets
408-9381, 408-9172

Note: Instruction Sheets for AMP Tooling are packaged with the tooling. For additional information call the Technical Support Center: **1-800-522-6752.**

Plug

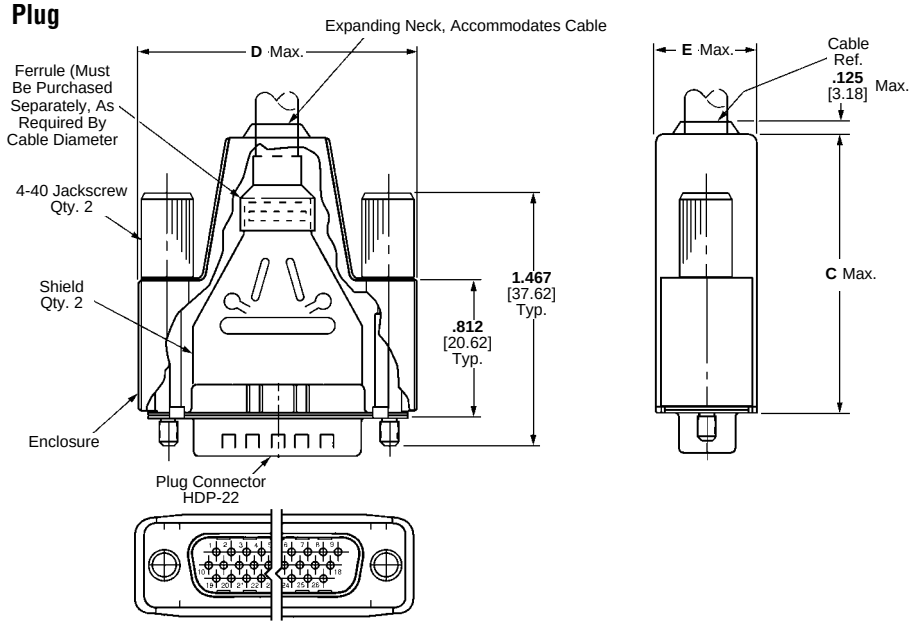

Receptacle

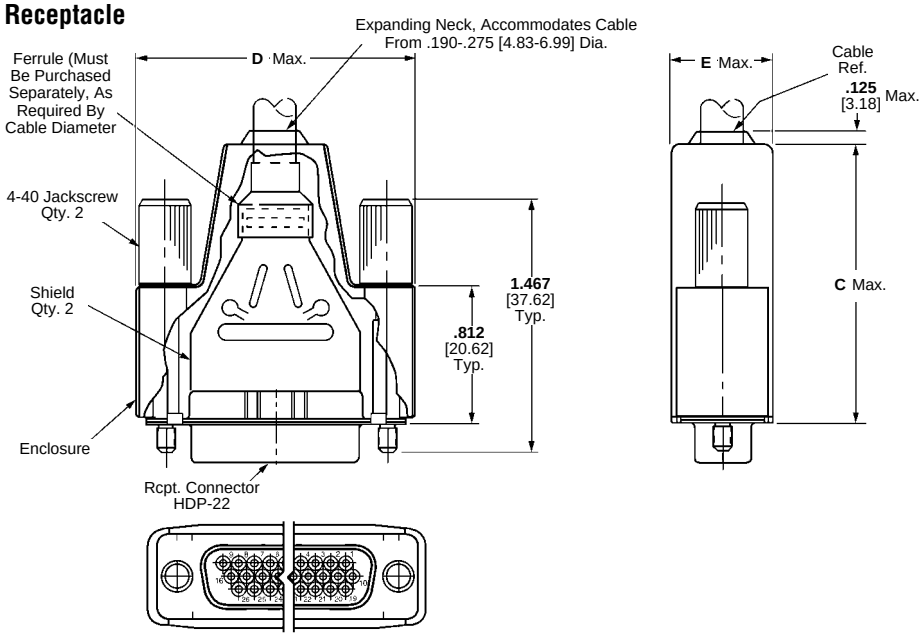

Shell Size	No. of Contact Positions	Dimensions C	D	E	Recommended Cable Insulation Diameter	Max. Cable Dia.†	Kit Numbers Plug	Receptacle	Shielding Enclosure Expansion Tool Cable O.D. (Max.)	Part Number
1	15	**1.640** 41.66	**1.355** 34.42	**.630** 16.00	**.190-.375** 4.83-9.53	**.350** 8.89	748473-1	748639-1	**.355** 9.02	58241-4
2	26	**1.640** 41.66	**1.685** 42.80	**.630** 16.00	**.190-.375** 4.83-9.53	**.350** 8.89	748474-1	748640-1		
3	44	**1.640** 41.66	**2.205** 56.01	**.630** 16.00	**.217-.435** 5.51-11.05	**.350** 8.89	748475-1	748641-1	**.445** 11.56	58241-1
4	62	**2.010** 51.05	**2.860** 72.64	**.730** 18.54	**.338-.562** 8.59-14.28	**.450** 11.43	748476-1	748642-1	**.562** 14.28	58241-2
5	78	**2.010** 51.05	**2.770** 70.36	**.730** 18.54	**.338-.490** 8.59-12.45	**.450** 11.43	748477-1	—		

Notes: 1. Plugs accept size 22 DF pin contacts and receptacles accept size 22 DF socket contacts.
2. Components of the kits are shipped unassembled and bulk-packaged in quantities of 100 pieces.
†Maximum cable diameter after jacket and braid removed.

For complete product information, order Catalog 82068

HDP-22 Crimp Snap-In Contact Connectors

Ferrules for Shielding Hardware Kits



Stepped



Straight

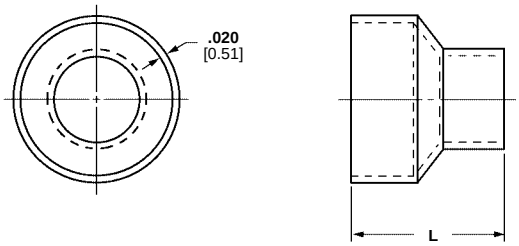

Shell Sizes	Style	L Dim.	Cable Diameter	Part Numbers	
				Ferrule	Die Sets*
1-3	Stepped	**.440** 11.18	**.165-.190** 4.19-4.83	747579-8	543424-3
1-3	Stepped	**.440** 11.18	**.190-.217** 4.83-5.51	747579-8	543424-2
1-3	Stepped	**.440** 11.18	**.217-.246** 5.51-6.25	747579-8	543424-8
1-3	Stepped	**.440** 11.18	**.246-.284** 6.25-7.21	1-747579-0	543424-1
1-3	Stepped	**.440** 11.18	**.284-.324** 7.21-8.23	1-747579-0	543424-7
1-3	Stepped	**.440** 11.18	**.324-.375** 8.23-9.53	1-747579-1	543424-6
1-3	Straight	**.440** 11.18	**.375-.437** 9.53-11.05	1-747579-2	543424-5
1-3	Straight	**.440** 11.18	**.400-.460** 10.16-11.56	1-747579-4	543424-4
4-5	Stepped	**.625** 15.88	**.230-.265** 5.84-6.73	1-747580-0	543425-2
4-5	Stepped	**.625** 15.88	**.338-.385** 8.59-9.78	747580-8	543425-1
4-5	Stepped	**.625** 15.88	**.375-432** 9.53-10.97	747580-4	58238-1
4-5	Stepped	**.625** 15.88	**.422-.490** 10.72-12.45	747580-5	58237-2
4	Straight	**.625** 15.88	**.480-.562** 12.19-14.28	747580-6	58237-1

*Die sets used with Hand Crimping Tool Part Number 543344-1 or Pneumatic Bench Tool Part Number 312522-3 equipped with Die Set Holder Part Number 58449-1.

Material and Finish:

Steel (annealed), tin plated

Related Product Data:

Shielding Hardware and Enclosure Kits—pages 1022, 1023

Technical Documents:

Instruction Sheets
408-9199, 408-9242, 408-9243, 408-9315, 408-9507, 408-9508

Note: Instruction Sheets for AMP Tooling are packaged with the tooling. For additional information call the Technical Support Center: **1-800-522-6752.**

Application Tooling for Shielding Hardware Kits



Hand Crimping Tool
Part Number 543344-1
(Requires Die Sets, see table above.)

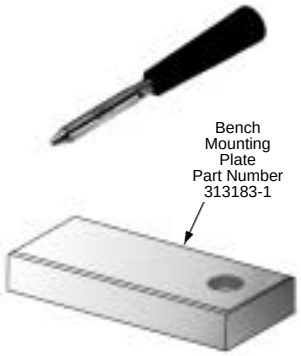

Shielding Enclosure Expansion Tools
Part Numbers
58241-1 **(.450 [11.43])†**
58241-2 **(.572 [14.53])†**
58241-4 **(.330 [8.38])†**
†Maximum Cable Diameter

Pneumatic Bench Tool
Part Number 312522-3
(Requires Die Set Holder Part Number 58449-1**.)**



For complete product information, order Catalog 82068

Products for Industrial & Commercial Applications
Dimensions are shown for reference purposes only.
Dimensions are in inches and millimeters unless otherwise specified. Values in brackets are metric equivalents.
Specifications subject to change.
Technical Support Center 1-800-522-6752 www.tycoelectronics.com

HDP-22 Crimp Snap-In Contact Connectors

Precision Formed Crimp Snap-In Contacts, Size 22 DF

Material:

Pin—Brass

Socket—Phosphor bronze

Finish:

A—Duplex plated .000030 [0.00076] gold on mating end, tin-lead on crimp barrel, with entire contact nickel underplated

B—Duplex plated gold flash on mating end, tin-lead on crimp barrel, entire contact nickel underplated

Related Product Data:

Connectors used with—pages 1021-1023

Application Tooling:

Hand Tools—PRO-CRIMPER II - page 13003, CERTI-CRIMP (SAHT) - page 13012

Bench Machines—AMP-O-LECTRIC Model G Terminating Machine - page 13005, AMP-O-LECTRIC Model K Terminating Machine - page 13007, Entry Level Terminator - page 13006, AMP-O-MATIC Stripper Crimper - page 13011

Leadmakers—pages 13008-13009

Technical Documents:

Product Specification
108-1268

Application Specification
114-10001

Instruction Sheet
408-9381

Note: Instruction Sheets for AMP Tooling are packaged with the tooling. For additional information call the Technical Support Center: **1-800-522-6752.**

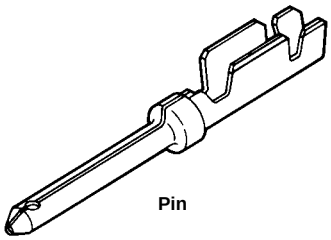

Pin

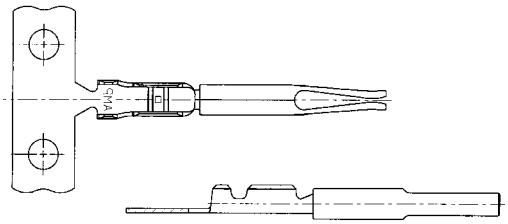

Socket

Wire Size AWG mm²	Insulation Diameter Max.	Contact Finish (Plating Code)	Contact Part Numbers				Hand Tools for Loose Form Contacts	
			Pin		Socket			
			Strip Form	Loose Form	Strip Form	Loose Form	PRO-CRIMPER II Hand Tool	CERTI-CRIMP Hand Tool
28-22 0.4-0.08	.040 1.02	A	748333-2	748333-4	748610-2	748610-4	90800-1	90430-1
		B	748333-5	748333-7	748610-5	748610-7		

Notes: Strip form contacts shipped 20,000 pieces/reel.

Insertion/Extraction Tool Part Number 91285-1 **(Instruction Sheet—408-9404)**

This tool contains interchangeable tips to Insert/Extract
Size 22, 28-22 AWG [0.08-0.4 mm²] Crimp Contacts
Size 20, 28-20 AWG [0.08-0.4 mm²] Crimp Contacts
Size 20, Posted Contacts

HDE-20 IDC Connectors for Discrete Wire and Jacketed Cable

Product Facts

- Insulation displacement contacts preloaded in housings
- No wire stripping
- Post plated contacts with no bare edges
- Duplex plated contacts—gold on mating end and tin on crimp end
- Patented contact promotes reliable termination of a wide range of wire sizes and insulation diameters
- Removable contacts for replacement and repair
- Selective loading of contacts available
- Crimp snap-in contacts available for making jumpers between circuits
- Recognized under the Component Program of Underwriters Laboratories Inc., File No. E28476
- Listed under Underwriters Laboratories Inc., Standard 1863, Communication Circuit Accessories, File No. E81956
- Certified by Canadian Standards Association, File No. LR 164196



Typical Application Rates

Tool	Rate
Pistol Style	7.4 Sec./Line
Arbor Tool	5.0 Sec./Line
CHAMPOMATOR Machine	2.8 Sec./Line

Note: Rates are based on total time to complete a double ended 25 position Jacketed Cable Assembly

HDE-20 All-Plastic IDC Connectors



Plug

Material and Finish:

Housing—94V-0 rated thermoplastic, black

Contacts—Phosphor bronze

Contact Finish—Duplex plated:

A—.000030 [0.00076] gold on mating end, tin-lead on termination end, with entire contact nickel underplated

B—Gold flash on mating end, tin-lead on termination end, with entire contact nickel underplated

Related Product Data:

Mateable Connectors:

HDP—pages 1039-1043

HDF—pages 1034-1038

HD-20 Board Mount—pages 1070-1084

HD-20 Solder Cup—pages 1044-1046

Cable Clamps—pages 1048-1050, 1053

Mating Hardware—pages 1058-1065

Technical Documents:

Product Specification
108-40011

Application Specifications
114-40002, 114-40003

Instruction Sheet
408-6621

Note: Instruction Sheets for AMP Tooling are packaged with the tooling. For additional information call the Technical Support Center: **1-800-522-6752.**



Receptacle

Plug

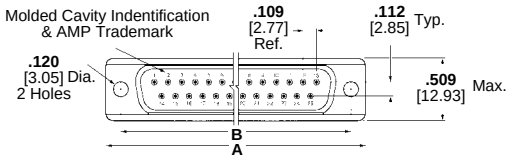

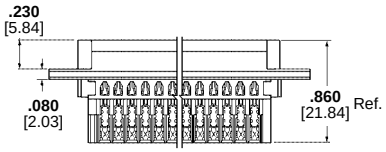

Shell Size	No. of Contact Positions	Dimensions A	Dimensions B	Contact Finish (Plating Code)	Connector Part Numbers: Contact Identification No. 1 for 30-26 AWG [0.05-0.15mm²] Wire Plug	Connector Part Numbers: Contact Identification No. 2 for 26-22 AWG [0.15-0.4mm²] Wire Plug
1	9	**1.213** 30.81	**.984** 24.99	A	745203-1	745203-2
				B	—	745203-5
2	15	**1.541** 39.14	**1.312** 33.33	A	—	745207-2
				B	—	745207-5
3	25	**2.090** 53.09	**1.852** 47.04	A	745211-1	745211-2
				B	—	745211-5
4	37	**2.732** 69.39	**2.500** 63.50	A	—	745215-2

Notes:
1. All connectors are preloaded with insulation displacement contacts. Pins in plug connectors and sockets in receptacle connectors. Contacts accept a max. wire insulation thickness of .015 [0.38] and a max. wire insulation dia. of .060 [1.52.]
2. HDE connectors are designed for terminating solid or stranded (7-strand max.) wire.
3. Individual conductor strands should be larger than .005 inch [0.127] diameter.
4. Extraction Tool Part Number 91232-1 (Instruction Sheet 408-6631) is used to remove pin or socket contacts.

Receptacle

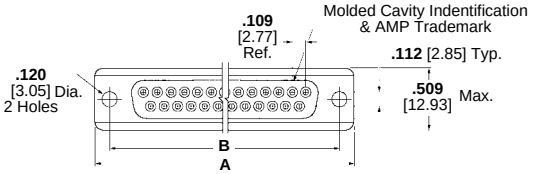

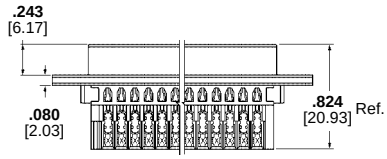

Shell Size	No. of Contact Positions	Dimensions A	Dimensions B	Contact Finish (Plating Code)	Connector Part Numbers: Contact Identification No. 1 for 30-26 AWG [0.05-0.15mm²] Wire Receptacle	Connector Part Numbers: Contact Identification No. 2 for 26-22 AWG [0.15-0.4mm²] Wire Receptacle
1	9	**1.213** 30.81	**.984** 24.99	A	—	745201-2
				B	—	745201-5
2	15	**1.541** 39.14	**1.312** 33.33	A	—	745205-2
				B	—	745205-5
3	25	**2.090** 53.09	**1.852** 47.04	A	745209-1	745209-2
				B	—	745209-5
4	37	**2.732** 69.39	**2.500** 63.50	A	—	745213-2

For complete product information, order Catalog 82068

HDE-20 Metal-Shell IDC Connectors



Material and Finish:

Shell—Steel, tin plated
Insert—94V-0 rated thermoplastic, black
Contacts—Phosphor bronze
Contact Finish—Duplex plated:
A—.000030 [0.00076] gold on mating end, tin-lead on termination end, with entire contact nickel underplated
B—Gold flash on mating end, tin-lead on termination end, with entire contact nickel underplated

Related Product Data:

Mateable Connectors:
HDP—pages 1039-1043
HDF—pages 1034-1038
HD-20 Board Mount—pages 1070-1084
HD-20 Solder Cup—pages 1044-1046
Cable Clamps—pages 1048-1050, 1053, 1054
Mating Hardware—pages 1058-1065

Technical Documents:

Product Specification
108-40011
Application Specifications
114-40002, 114-40003
Instruction Sheet
408-6645

Note: Instruction Sheets for AMP Tooling are packaged with the tooling. For additional information call the Technical Support Center: **1-800-522-6752.**



Plug

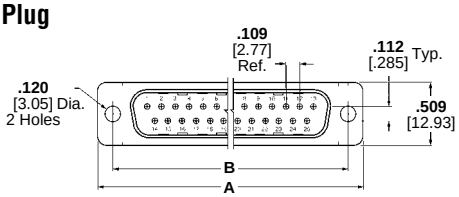

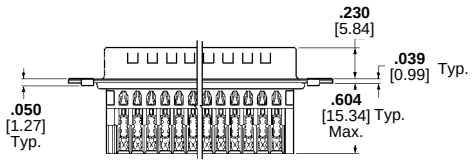

Shell Size	No. of Contact Positions	Dimensions A	Dimensions B	Contact Finish (Plating Code)	Connector Part Numbers: Contact Identification No. 1 for 30-26 AWG [0.05-0.15mm²] Wire	Contact Identification No. 2 for 26-22 AWG [0.15-0.4mm²] Wire	Contact Identification No. 3 for 22-20 AWG [0.4-0.6mm²] Wire
					Plug	Plug	Plug
1	9	**1.213** 30.81	**.984** 24.99	A	745492-1	745492-2	745492-3
				B	—	745492-5	745492-6
2	15	**1.541** 39.14	**1.312** 33.33	A	745494-1	745494-2	—
				B	—	745494-5	745494-6
3*	25	**2.088** 53.04	**1.852** 47.04	A	745496-1	745496-2	745496-3
				B	745496-4	745496-5	745496-6
4	37	**2.729** 69.32	**2.500** 63.50	A	745498-1	745498-2	—
				B	—	745498-5	745498-6

*** RS-232, size 3 connector, for 26-22** 0.15-0.4mm² **AWG wire select loaded circuits 1-8,15,17, 20 and 22, Plug Part Number** 747740-1**, Receptacle Part Number** 747741-1**, gold flash contacts.**

Notes:
1. All connectors are preloaded with insulation displacement contacts. Pins in plug connectors and sockets in receptacle connectors. Contacts accept a max. wire insulation thickness of .015 [0.38] and a max. wire insulation dia. of .060 [1.52].
2. Connectors can be made available with clinch nuts, contact Tyco Electronics.
3. HDE connectors are designed for terminating solid or stranded (7-strand max.) wire.
4. Individual conductor strands should be larger than .005 inch [0.127] diameter.
5. Extraction Tool Part Number 91232-1 (Instruction Sheet 408-6631) is used to remove pin or socket contacts.

Receptacle

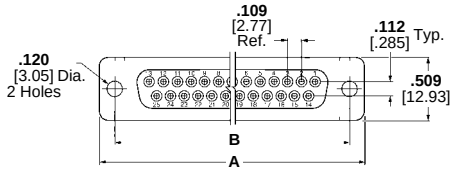

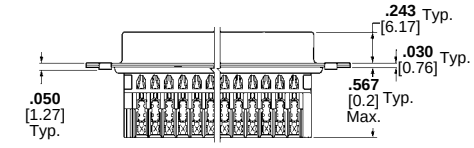

Shell Size	No. of Contact Positions	Dimensions A	Dimensions B	Contact Finish (Plating Code)	Connector Part Numbers: Contact Identification No. 1 for 30-26 AWG [0.05-0.15mm²] Wire	Contact Identification No. 2 for 26-22 AWG [0.15-0.4mm²] Wire	Contact Identification No. 3 for 22-20 AWG [0.4-0.6mm²] Wire
					Receptacle	Receptacle	Receptacle
1	9	**1.213** 30.81	**.984** 24.99	A	745491-1	745491-2	745491-3
				B	—	745491-5	—
2	15	**1.541** 39.14	**1.312** 33.33	A	745493-1	745493-2	745493-3
				B	—	745493-5	745493-6
3*	25	**2.088** 53.04	**1.852** 47.04	A	745495-1	745495-2	745495-3
				B	—	745495-5	745495-6
4	37	**2.729** 69.32	**2.500** 63.50	A	745497-1	745497-2	—
				B	—	745497-5	745497-6

For complete product information, order Catalog 82068

Products for Industrial & Commercial Applications
Dimensions are shown for reference purposes only.
Dimensions are in inches and millimeters unless otherwise specified. Values in brackets are metric equivalents.
Specifications subject to change.
Technical Support Center 1-800-522-6752 www.tycoelectronics.com

HDE-20 Basic Shielding Hardware Kits



Each kit contains:

- Connector
- Inner shield
- Outer shield

Ferrules must be purchased separately.

Material and Finish:

Connector Shell—Steel, tin plated
Connector Insert—94V-0 rated thermoplastic, black
Shield—Steel, tin plated
Contacts—Phosphor bronze
Contact Finish—Duplex plated:
A—.000030 [0.00076] gold on mating end, tin-lead on termination end, with entire contact nickel underplated
B—Gold flash on mating end, tin-lead on termination end, with entire contact nickel underplated

Related Product Data:

Mateable Connectors:
HDP—pages 1039-1043
HDF—pages 1034-1038
HD-20 Board Mount—pages 1070-1084
HD-20 Solder Cup—pages 1044-1046
Cable Clamps—pages 1048-1052
Mating Hardware—pages 1058-1065

Plug

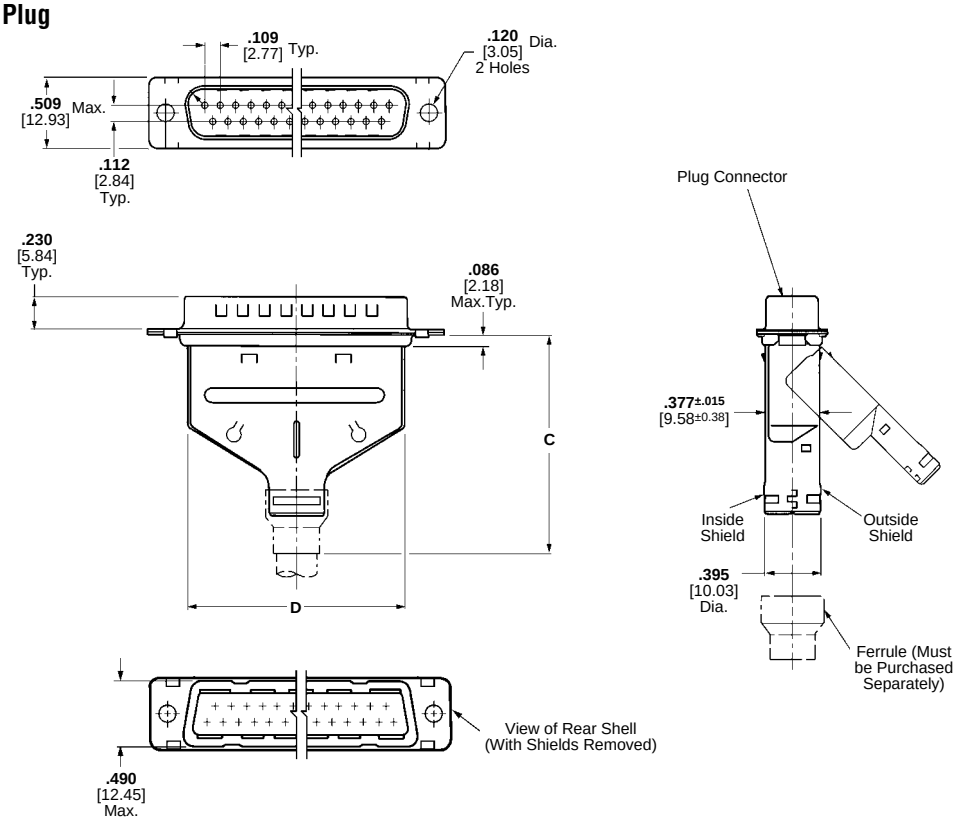

Technical Documents:

Product Specifications
108-40011, 108-40030

Application Specifications
114-40002, 114-40003, 114-40006

Instruction Sheet
408-9010

Note: Instruction Sheets for AMP Tooling are packaged with the tooling. For additional information call the Technical Support Center: **1-800-522-6752.**

Shell Size	No. of Contact Positions	Dimensions C	Dimensions D	Recommended Cable Ins. Dia.	Max. Cable Dia.†	Contact Finish (Plating Code)	Connector Part Numbers: Contact I.D. No. 1 for 30-26 AWG [0.05-0.15mm²] Wire — Plug	Contact I.D. No. 2 for 26-22 AWG [0.15-0.4mm²] Wire — Plug	Contact I.D. No. 3 for 22-20 AWG [0.4-0.6mm²] Wire — Plug
1	9	**1.520** 38.61	**.678** 17.22	**.165-.455** 4.19-11.56	**.350** 8.89	A	—	747515-2	747515-3
						B	—	747515-5	—
2	15	**1.520** 38.61	**1.002** 25.45	**.165-.455** 4.19-11.56	**.350** 8.89	A	747531-1	747531-2	—
						B	—	747531-5	—
3	25	**1.520** 38.61	**1.550** 39.37	**.165-.455** 4.19-11.56	**.350** 8.89	A	747547-1	747547-2	—
						B	747547-4	747547-5	—
4	37	**1.867** 47.42	**2.205** 56.01	**.338-.562** 8.59-14.28	**.450** 11.43	A	747563-1	—	—
						B	—	747563-5	—

Note: Components of the kits are shipped unassembled and bulk-packaged in quantities of 100 pieces.
†Maximum cable diameter after jacket and braid removed.

For complete product information, order Catalog 82068

HDE-20 Basic Shielding Hardware Kits



Each kit contains:

- Connector
- Inner shield
- Outer shield

Ferrules must be purchased separately.

Material and Finish:

Connector Shell—Steel, tin plated
Connector Insert—94V-0 rated thermoplastic, black
Shield—Steel, tin plated
Contacts—Phosphor bronze
Contact Finish—Duplex plated:
A—.000030 [0.00076] gold on mating end, tin-lead on termination end, with entire contact nickel underplated
B—Gold flash on mating end, tin-lead on termination end, with entire contact nickel underplated

Related Product Data:

Ferrules—page 1024
Mateable Connectors:
HDP—pages 1039-1043
HDF—pages 1034-1038
HD-20 Board Mount—pages 1070-1084
HD-20 Solder Cup—pages 1044-1046
Cable Clamps—pages 1048-1052
Mating Hardware—pages 1058-1065

Receptacle

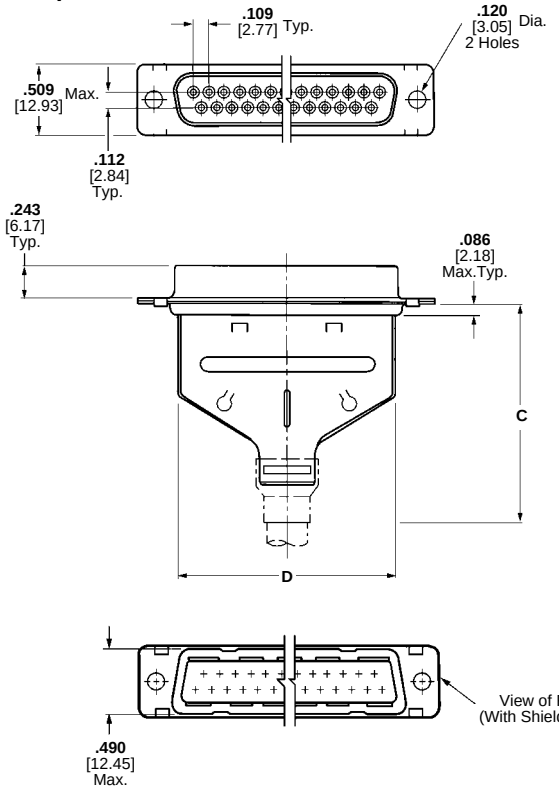

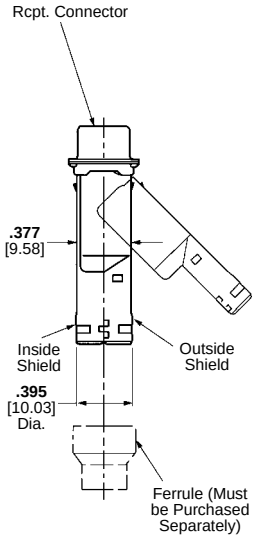

Technical Documents:

Product Specifications
108-40011, 108-40030
Application Specifications
114-40002, 114-40003, 114-40006
Instruction Sheet
408-9010

Note: Instruction Sheets for AMP Tooling are packaged with the tooling. For additional information call the Technical Support Center: **1-800-522-6752.**

Shell Size	No. of Contact Positions	Dimensions C	Dimensions D	Recommended Cable Ins. Dia.	Max. Cable Dia.†	Contact Finish (Plating Code)	Connector Part Numbers: Contact I.D. No. 1 for 30-26 AWG [0.05-0.15mm²] Wire — Receptacle	Contact I.D. No. 2 for 26-22 AWG [0.15-0.4mm²] Wire — Receptacle	Contact I.D. No. 3 for 22-20 AWG [0.4-0.6mm²] Wire — Receptacle
1	9	**1.520** 38.61	**.678** 17.22	**.165-.455** 4.19-11.56	**.350** 8.89	A	—	747516-2	747516-3
						B	—	747516-5	—
2	15	**1.520** 38.61	**1.002** 25.45	**.165-.455** 4.19-11.56	**.350** 8.89	A	—	747532-2	—
						B	—	747532-5	—
3	25	**1.520** 38.61	**1.550** 39.37	**.165-.455** 4.19-11.56	**.350** 8.89	A	747548-1	747548-2	—
						B	—	747548-5	—
4	37	**1.867** 47.42	**2.205** 56.01	**.338-.562** 8.59-14.28	**.450** 11.43	B	747564-4	747564-5	—

Note: Components of the kits are shipped unassembled and bulk-packaged in quantities of 100 pieces.
†Maximum cable diameter after jacket and braid removed.

For complete product information, order Catalog 82068

Products for Industrial & Commercial Applications
Dimensions are shown for reference purposes only.
Dimensions are in inches and millimeters unless otherwise specified. Values in brackets are metric equivalents.
Specifications subject to change.
Technical Support Center 1-800-522-6752 www.tycoelectronics.com

HDE-20 Basic Shielding Hardware Kits



Each kit contains:

- Connector
- Inner shield
- Outer shield
- Enclosure
- Two jackscrews

Ferrules must be purchased separately.

Material and Finish:

Connector Shell—Steel, tin plated
Connector Insert—94V-0 rated thermoplastic, black
Shield—Steel, tin plated
Enclosure—PVC, black
Jackscrews—Zinc alloy
Contacts—Phosphor bronze
Contact Finish—Duplex plated:
A—.000030 [0.00076] gold on mating end, tin-lead on termination end, with entire contact nickel underplated
B—Gold flash on mating end, tin-lead on termination end, with entire contact nickel underplated

Plug

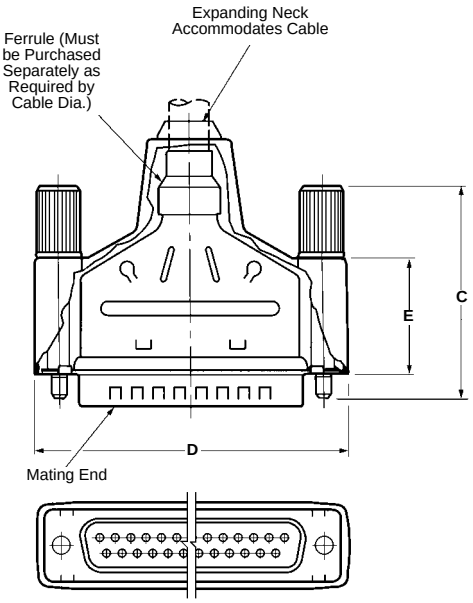

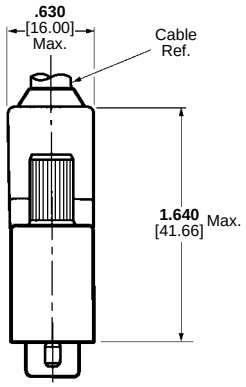

Related Product Data:

Ferrules—page 1024
Mateable Connectors:
HDP—pages 1039-1043
HDF—pages 1034-1038
HD-20 Board Mount—pages 1070-1084
HD-20 Solder Cup—pages 1044-1046
Cable Clamps—pages 1048-1052
Mating Hardware—pages 1059-1065

Technical Documents:

Product Specifications
108-40011, 108-40030
Application Specifications
114-40002, 114-40003, 114-40006
114-40008
Instruction Sheet
408-9172

Note: Instruction Sheets for AMP Tooling are packaged with the tooling. For additional information call the Technical Support Center: **1-800-522-6752.**

Shell Size	No. of Contact Positions	Dimensions C	Dimensions D	Dimensions E	Recommended Cable Ins. Dia.	Max. Cable Dia.†	Contact Finish (Plating Code)	Kit Part Numbers: Contact I.D. No. 1 for 30-26 AWG [0.05-0.15mm²] Plug	Kit Part Numbers: Contact I.D. No. 2 for 26-22 AWG [0.15-0.4mm²] Plug	Kit Part Numbers: Contact I.D. No. 3 for 22-20 AWG [0.4-0.6mm²] Plug	Shielding Enclosure Expansion Tool: Cable O.D. (Max.)	Shielding Enclosure Expansion Tool: Part Numbers
1	9	**1.640** 41.66	**1.355** 34.42	**.630** 16.00	**.190-.375** 4.83-9.53	**.350** 8.89	A	—	747944-2	—	**.355** 9.02	58241-4
							B	—	747944-5	—		
2	15	**1.640** 41.66	**1.685** 42.80	**.630** 16.00	**.190-.375** 4.83-9.53	**.350** 8.89	A	747946-1	747946-2	—		
							B	—	747946-5	—		
3	25	**1.640** 41.66	**2.210** 56.13	**.630** 16.00	**.217-.435** 5.51-11.05	**.350** 8.89	A	747948-1	747948-2	—	**.455** 11.56	58241-1
							B	747948-4	747948-5	747948-6		
4	37	**2.010** 51.05	**2.865** 72.77	**.730** 18.54	**.338-.562** 8.59-14.28	**.450** 11.43	A	747950-1	747950-2	—	**.562** 14.27	58241-2
							B	—	747950-5	—		

†Maximum cable diameter after jacket and braid removed.

For complete product information, order Catalog 82068

HDE-20 Basic Shielding Hardware Kits



Receptacle

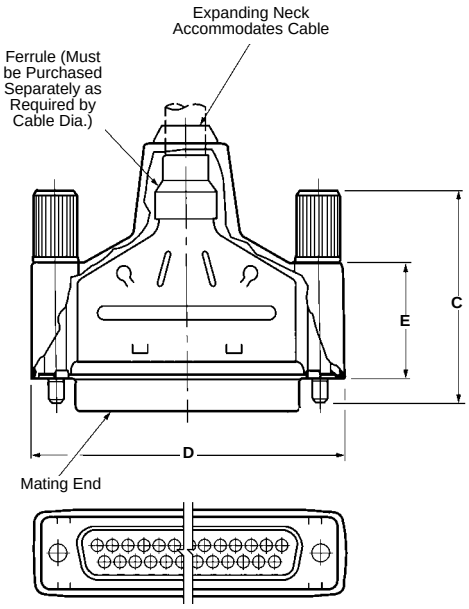

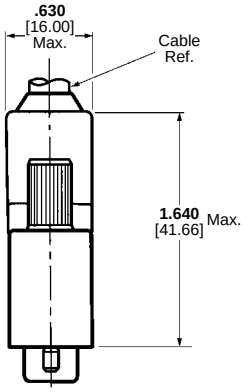

Each kit contains:

- Connector
- Inner shield
- Outer shield
- Enclosure
- Two jackscrews

Ferrules must be purchased separately.

Material and Finish:

Connector Shell—Steel, tin plated
Connector Insert—94V-0 rated thermoplastic, black
Shield—Steel, tin plated
Enclosure—PVC, black
Jackscrews—Zinc alloy
Contacts—Phosphor bronze
Contact Finish—Duplex plated:
A—.000030 [0.00076] gold on mating end, tin-lead on termination end, with entire contact nickel underplated
B—Gold flash on mating end, tin-lead on termination end, with entire contact nickel underplated

Related Product Data:

Ferrules—page 1024
Mateable Connectors:
HDP—pages 1039-1043
HDF—pages 1034-1038
HD-20 Board Mount—pages 1070-1084
HD-20 Solder Cup—pages 1044-1046
Cable Clamps—pages 1048-1052
Mating Hardware—pages 1059-1065

Technical Documents:

Product Specifications
108-40011, 108-40030
Application Specifications
114-40002, 114-40003, 114-40006
114-40008
Instruction Sheet
408-9172

Note: Instruction Sheets for AMP Tooling are packaged with the tooling. For additional information call the Technical Support Center: **1-800-522-6752.**

Shell Size	No. of Contact Positions	Dimensions C	Dimensions D	Dimensions E	Recommended Cable Ins. Dia.	Max. Cable Dia.†	Contact Finish (Plating Code)	Kit Part Numbers: Contact I.D. No. 1 for 30-26 AWG [0.05-0.15mm²] Receptacle	Kit Part Numbers: Contact I.D. No. 2 for 26-22 AWG [0.15-0.4mm²] Receptacle	Shielding Enclosure Expansion Tool: Cable O.D. (Max.)	Shielding Enclosure Expansion Tool: Part Numbers
1	9	**1.640** 41.66	**1.355** 34.42	**.630** 16.00	**.190-.375** 4.83-9.53	**.350** 8.89	A	747943-1	747943-2	**.355** 9.02	58241-4
							B	—	747943-5		
2	15	**1.640** 41.66	**1.685** 42.80	**.630** 16.00	**.190-.375** 4.83-9.53	**.350** 8.89	A	747945-1	747945-2		
							B	—	747945-5		
3	25	**1.640** 41.66	**2.210** 56.13	**.630** 16.00	**.217-.435** 5.51-11.05	**.350** 8.89	A	747947-1	747947-2	**.455** 11.56	58241-1
							B	747947-4	747947-5		
4	37	**2.010** 51.05	**2.865** 72.77	**.730** 18.54	**.338-.562** 8.59-14.28	**.450** 11.43	A	—	747949-2	**.562** 14.27	58241-2
							B	—	747949-5		

†Maximum cable diameter after jacket and braid removed.

For complete product information, order Catalog 82068

Products for Industrial & Commercial Applications
Dimensions are shown for reference purposes only.
Dimensions are in inches and millimeters unless otherwise specified. Values in brackets are metric equivalents.
Specifications subject to change.
Technical Support Center 1-800-522-6752
www.tycoelectronics.com

HDE-20 Application Tooling

Tool	Handle & Head Tool Assembly	Handle	Head Assembly	See Page
Manual Pistol Grip Tool	608868-1	58074-1	58063-2	13015
Air Pistol Grip Tool	—	58075-1	58063-2	13015

Bench Mounted Tools with Modular Heads

Tool	Bench Assembly	Head Assembly	See Page
Bench Mount Pneumatic Power Assembly	58338-1	58063-2	13015
Bench Mount Electric Power Assembly	931800-1	58063-2	13015

Manual Arbor Tool No. 91085-2 (For Jacketed Cable)

Wire Outside Diameter	Tool Mount	Termination Tool	See Page
.041-.060 [1.04-1.52]	543157-1	543426-1	13015
.040 [1.02] and smaller	543157-1	543426-2	13015

Semi-Automatic Bench Tooling

CHAMPOMATOR 2.5 Bench Terminating Machine – **Part Number** 354786-4
Control Module –
Part No. 852423-1 120 VAC
Part No. 852423-2 100 VAC
Part No. 852423-3 230 VAC
See page 13018

Automatic Tooling (For Jacketed Cable)

CHAMPOMATOR 3A Terminating Machine **Part Number** 1-761420-3
See page 13019

HDF-20 IDC Mass Termination Connector for Flat Ribbon Cable, .050 [1.27] Conductor Centers



Product Facts

- Available in all 5 standard shell sizes
- Selection of through holes, 4-40 threaded inserts or 4-40 threaded self-locking inserts
- Option of 90° or 180° cable exit
- Low terminated height from the mounting flange to the back of the connector
- Visual inspection of termination possible
- Fluted cover provides positive alignment of cable prior to termination
- Wide range of application tooling—from portable hand tool to bench mounted pneumatic semi-automatic equipment
- Patented insulation displacement contact latches into the connector cover
- Contact design provides a "gastight" termination
- Contacts accept 28 AWG [0.08mm^2] solid and stranded, and 26 AWG [0.15mm^2] solid and stranded round conductor flat ribbon cable on .050 [1.27] centers
- Qualified to Battelle Level III environments
- Contacts are duplex plated with gold on the mating end and tin-lead on the termination end
- Recognized under the Component Program of Underwriters Laboratories Inc., File No. E28476
- Listed under Underwriters Laboratories Inc., Standard 1863, Communication Circuit Accessories, File No. E81956
- Certified by Canadian Standards Association, File No. LR 7189

HDF-20 Low Profile Metal-Shell Connectors (for Round Conductor Flat Ribbon Cable)

Plug Assemblies (with Grounding Indents)



Housing and Covers are Preassembled; Cable Stabilizer is Separate.

Material and Finish:

Front Shell—Steel, tin plated

Housing, Cover & Cable Stabilizer—Black thermoplastic, 94V-0 rated

Threaded Inserts—Brass, unplated

Contacts—Phosphor bronze, duplex plated .000030 [0.00076] gold on mating end, .000100-.000200 [0.00254-0.00508] bright tin-lead on termination end, with entire contact underplated .000050 [0.00127] nickel

Related Product Data:

Mateable Receptacles:

HDF-20 Metal-Shell—page 1036

HDE—pages 1026-1032

HDP—pages 1039-1043

HD-20 Board Mount—pages 1069-1094

Accessories:

Mating Hardware—pages 1058-1065

Application Tooling—AMP-LATCH Hand Tool Kit 768340-1 page 13014

Technical Documents:

Product Specifications
108-40004 Ribbon Cable, PVC Insulated, AMP
108-40012 HDF-20 Low Profile Connectors

Application Specification
114-40005 Ribbon Cable Connectors

Note: Instruction Sheets for AMP Tooling are packaged with the tooling. For additional information call the Technical Support Center: **1-800-522-6752.**

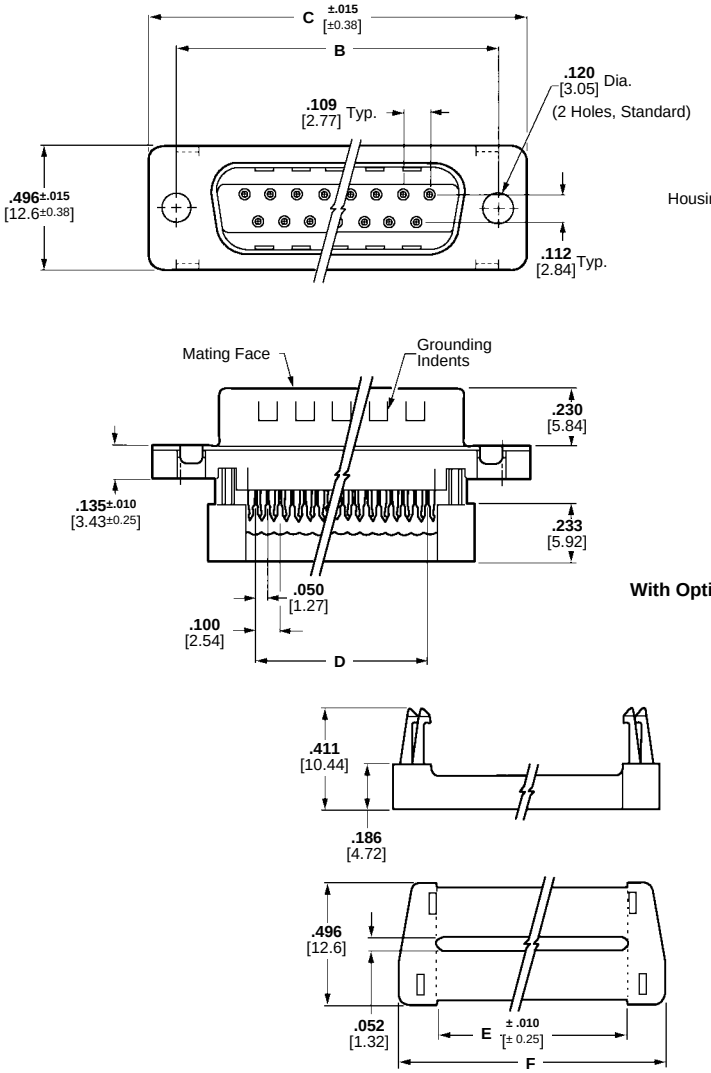

With Optional 4-40 Threaded Inserts

Optional Cable Stabilizer—90° or 180° Exit

No. of Contact Positions (Shell Size)	Dimensions					Optional Cable Stabilizer Part Numbers	Plug Assembly Part Numbers	
	B	C	D	E	F		With Standard Mounting Holes	With Threaded Inserts
9 (1)	**.984** 24.99	**1.216** 30.89	**.400** 10.16	**.480** 12.19	**.759** 19.28	747275-4	747306-4	747043-4
15 (2)	**1.312** 33.32	**1.541** 39.14	**.700** 17.78	**.780** 19.81	**1.087** 27.61	747275-3	747306-3	747043-3
25 (3)	**1.852** 47.04	**2.090** 53.09	**1.200** 30.48	**1.280** 32.51	**1.623** 41.22	747275-2	747306-2	747043-2
37 (4)	**2.500** 63.50	**2.732** 69.39	**1.800** 45.72	**1.880** 47.75	**2.275** 57.78	747275-1	747306-1	747043-1

Note: All plug assemblies are supplied with housing and cover preassembled (shown above).

HDF-20 Low Profile Metal-Shell Connectors (for Round Conductor Flat Ribbon Cable)

Receptacle Assemblies



Housing and Covers are Preassembled; Cable Stabilizer is Separate.

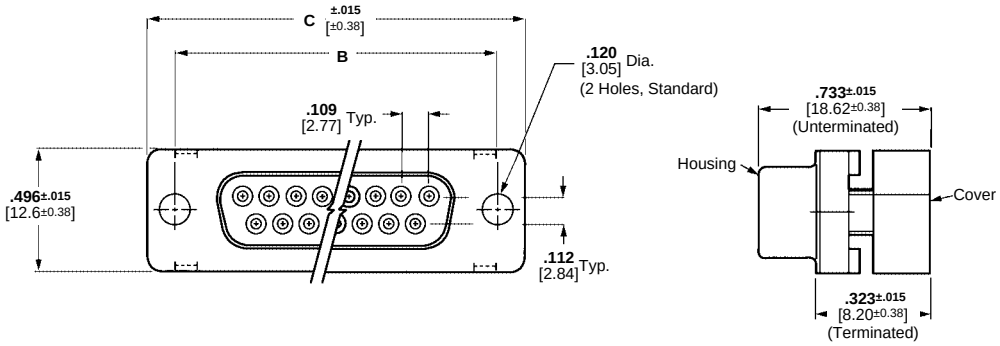

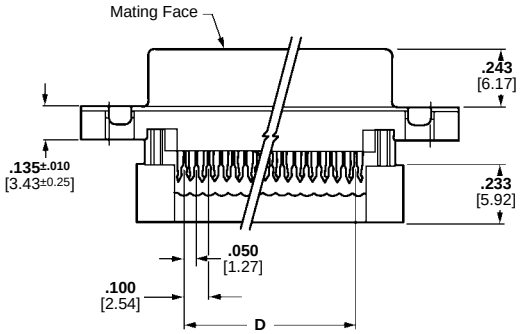

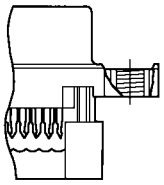

With Optional 4-40 Threaded Inserts

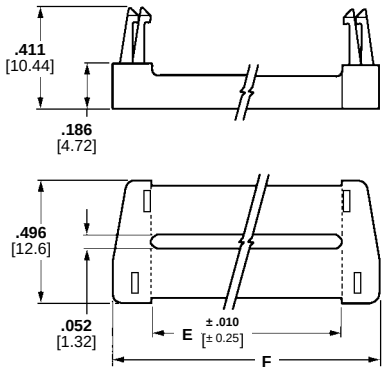

Optional Cable Stabilizer—90° or 180° Exit

Material and Finish:

Front Shell—Steel, tin plated

Housing, Cover & Cable Stabilizer—Black thermoplastic, 94V-0 rated

Threaded Inserts—Brass, unplated

Socket Contacts—Phosphor bronze, duplex plated .000030 [0.00076] gold on mating end, .000100-.000200 [0.00254-0.00508] bright tin-lead on termination end, with entire contact underplated .000050 [0.00127] nickel

Related Product Data:

Mateable Plugs:

HDF-20 Metal-Shell—page 1037

HDE—pages 1026-1032

HDP—pages 1039-1043

HD-20 Board Mount—pages 1069-1094

Accessories:

Mating Hardware—pages 1058-1065

Application Tooling—AMP-LATCH Hand Tool Kit 768340-1 page 13014

Technical Documents:

Product Specifications
108-40004 Ribbon Cable, PVC Insulated, AMP
108-40012 HDF-20 Low Profile Connectors

Application Specification
114-40005 Ribbon Cable Connectors

Note: Instruction Sheets for AMP Tooling are packaged with the tooling. For additional information call the Technical Support Center: **1-800-522-6752.**

No. of Contact Positions (Shell Size)	Dimensions					Optional Cable Stabilizer Part Numbers	Receptacle Assembly Part Numbers	
	B	C	D	E	F		With Standard Mounting Holes	With Threaded Inserts
9 (1)	**.984** 24.99	**1.216** 30.89	**.400** 10.16	**.480** 12.19	**.759** 19.28	747275-4	747303-4	747052-4
15 (2)	**1.312** 33.32	**1.541** 39.14	**.700** 17.78	**.780** 19.81	**1.087** 27.61	747275-3	747303-3	747052-3
25 (3)	**1.852** 47.04	**2.090** 53.09	**1.200** 30.48	**1.280** 32.51	**1.623** 41.22	747275-2	747303-2	747052-2
37 (4)	**2.500** 63.50	**2.732** 69.39	**1.800** 45.72	**1.880** 47.75	**2.275** 57.78	747275-1	747303-1	747052-1

Note: All plug assemblies are supplied with housing and cover preassembled (shown above).

Products for Industrial & Commercial Applications
Dimensions are shown for reference purposes only.
Dimensions are in inches and millimeters unless otherwise specified. Values in brackets are metric equivalents.
Specifications subject to change.
Technical Support Center 1-800-522-6752 www.tycoelectronics.com

HDF-20 Low Profile All-Plastic Connectors (for Round Conductor Flat Ribbon Cable)

Plug Assemblies



Housing and Covers are Preassembled; Cable Stabilizer is Separate.

Material and Finish:

Housing, Cover & Cable Stabilizer—Black thermoplastic, 94V-0 rated

Threaded Inserts—Brass, unplated

Pin Contacts—Phosphor bronze, duplex plated .000030 [0.00076] gold on mating end, .000100-.000200 [0.00254-0.00508] bright tin-lead on termination end, with entire contact underplated .000050 [0.00127] nickel

Related Product Data:

Mateable Receptacles:

HDF-20 All-Plastic—page 1038

HD-20 Board Mount—pages 1069-1094

HDE All-Plastic—page 1027

Accessories:

Mating Hardware—pages 1058-1065

Application Tooling—AMP-LATCH Hand Tool Kit 768340-1 page 13014

Technical Documents:

Product Specifications
108-40004 Ribbon Cable, PVC Insulated, AMP
108-40012 HDF-20 Low Profile Connectors

Application Specification
114-40005 Ribbon Cable Connectors

Note: Instruction Sheets for AMP Tooling are packaged with the tooling. For additional information call the Technical Support Center: **1-800-522-6752.**

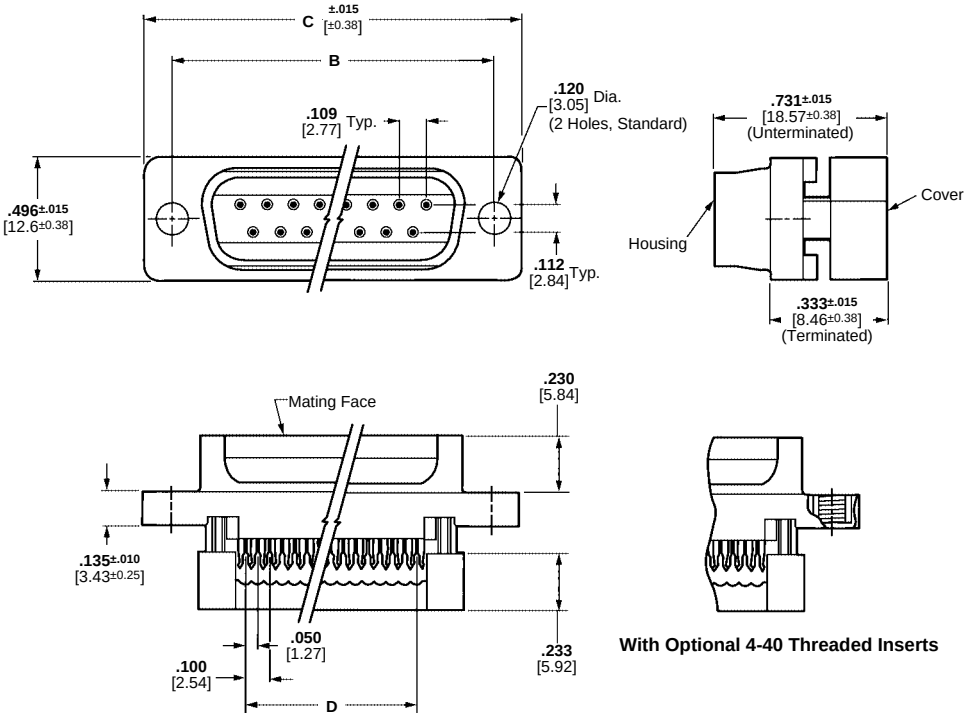

With Optional 4-40 Threaded Inserts

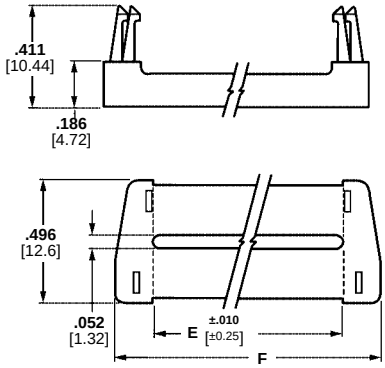

Optional Cable Stabilizer—90° or 180° Exit

No. of Contact Positions (Shell Size)	Dimensions					Optional Cable Stabilizer Part Numbers	Plug Assembly Part Numbers	
	B	C	D	E	F		With Standard Mounting Holes	With Threaded Inserts
9 (1)	**.984** 24.99	**1.216** 30.89	**.400** 10.16	**.480** 12.19	**.759** 19.28	747275-4	747321-4	747053-4
15 (2)	**1.312** 33.32	**1.541** 39.14	**.700** 17.78	**.780** 19.81	**1.087** 27.61	747275-3	747321-3	747053-3
25 (3)	**1.852** 47.04	**2.090** 53.09	**1.200** 30.48	**1.280** 32.51	**1.623** 41.22	747275-2	747321-2	747053-2
37 (4)	**2.500** 63.50	**2.732** 69.39	**1.800** 45.72	**1.880** 47.75	**2.275** 57.78	747275-1	747321-1	747053-1

Note: All plug assemblies are supplied with housing and cover preassembled (shown above).

HDF-20 Low Profile All-Plastic Connectors (for Round Conductor Flat Ribbon Cable)

Receptacle Assemblies



Housing and Covers are Preassembled; Cable Stabilizer is Separate.

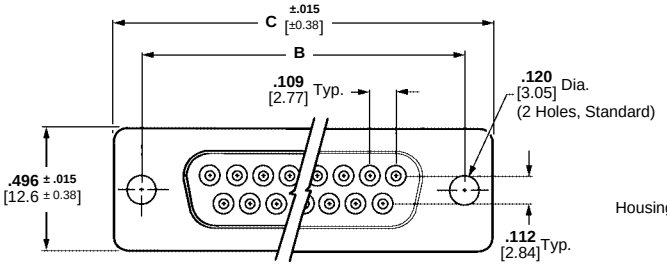

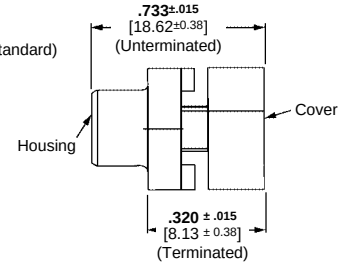

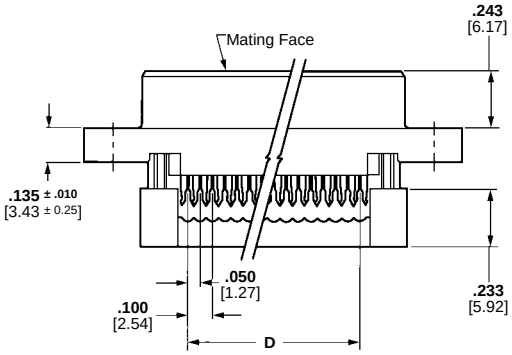

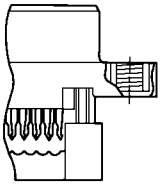

With Optional 4-40 Threaded Inserts

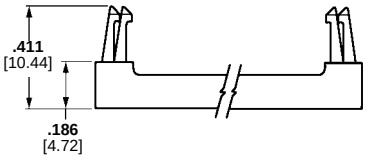

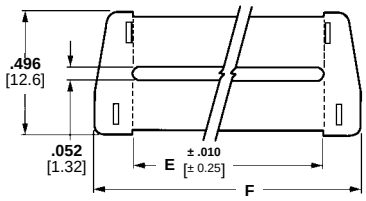

Optional Cable Stabilizer—90° or 180° Exit

Material and Finish:

Housing, Cover & Cable Stabilizer—Black thermoplastic, 94V-0 rated

Threaded Inserts—Brass, unplated

Socket Contacts—Phosphor bronze, duplex plated .000030 [0.00076] gold on mating end, .000100-.000200 [0.00254-0.00508] bright tin-lead on termination end, with entire contact underplated .000050 [0.00127] nickel

Related Product Data:

Mateable Plugs:

HDF-20 All-Plastic—page 1038

HDE All-Plastic—page 1027

HD-20 Board Mount—pages 1069-1094

Accessories:

Mating Hardware—pages 1058-1065

Application Tooling—AMP-LATCH Hand Tool Kit 768340-1 page 13014

Technical Documents:

Product Specifications
108-40004 Ribbon Cable, PVC Insulated, AMP
108-40012 HDF-20 Low Profile Connectors

Application Specification
114-40005 Ribbon Cable Connectors

Note: Instruction Sheets for AMP Tooling are packaged with the tooling. For additional information call the Technical Support Center: **1-800-522-6752.**

No. of Contact Positions (Shell Size)	Dimensions					Optional Cable Stabilizer Part Numbers	Receptacle Assembly Part Numbers	
	B	C	D	E	F		With Standard Mounting Holes	With Threaded Inserts
9 (1)	**.984** 24.99	**1.216** 30.89	**.400** 10.16	**.480** 12.19	**.759** 19.28	747275-4	747318-4	747051-4
15 (2)	**1.312** 33.32	**1.541** 39.14	**.700** 17.78	**.780** 19.81	**1.087** 27.61	747275-3	747318-3	747051-3
25 (3)	**1.852** 47.04	**2.090** 53.09	**1.200** 30.48	**1.280** 32.51	**1.623** 41.22	747275-2	747318-2	747051-2
37 (4)	**2.500** 63.50	**2.732** 69.39	**1.800** 45.72	**1.880** 47.75	**2.275** 57.78	747275-1	747318-1	747051-1

Note: All plug assemblies are supplied with housing and cover preassembled (shown above).

Products for Industrial & Commercial Applications
Dimensions are shown for reference purposes only.
Dimensions are in inches and millimeters unless otherwise specified. Values in brackets are metric equivalents.
Specifications subject to change.
Technical Support Center 1-800-522-6752 www.tycoelectronics.com

HDP-20 Crimp Snap-In Contact Connectors

Product Facts

- Shell sizes offer wide choice of contact positions—9, 15, 25, 37 and 50
- Lower cost, commercial version of the AMP military approved series
- Tin or zinc plated shells, with or without grounding indents
- Crimp snap-in contacts allows loading of only the number of contacts being used
- Available with shielding hardware and shielding enclosure kits
- Numerous cable clamps and mating hardware options
- Low cost, high performance, precision-formed crimp contacts
- Machine applied terminations promote highest production rates at lower applied cost
- Intermateable with any size 20 Subminiature D connector dimensionally complying with MIL-C-24308
- Recognized under the Component Program of Underwriters Laboratories Inc., File No. E28476
- Listed under Underwriters Laboratories Inc., Standard 1863, Communication Circuit Accessories, File No. E81956
- Certified by Canadian Standards Association, File No. LR 16455



For complete product information, order Catalog 82068

HDP-20 Crimp Snap-In Contact Connectors



Material and Finish:

Shell—Steel, zinc or tin plated
Insert—94V-0 rated thermoplastic, black

Mounting Holes:

Standard—.120 [3.05] Dia.
Clinch Nut—4-40 threads with self-locking feature

Related Product Data:

Contacts—page 1043
Mateable Connectors:
HDE—pages 1026-1032
HDF—pages 1034-1038
HDP—pages 1039-1043
HDP Solder Cup—pages 1044-1046
HD-20 Board Mount—pages 1069-1094
Cable Clamps—pages 1048-1054
Mating Hardware—pages 1058-1065

Technical Documents:

Product Specification
108-40005
Application Specifications
114-10000, 114-40030



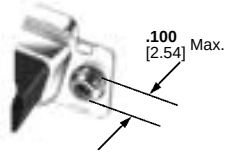

Clinch Nut
(Plug and Receptacle)

Note: Instruction Sheets for AMP Tooling are packaged with the tooling. For additional information call the Technical Support Center: **1-800-522-6752.**

Plug

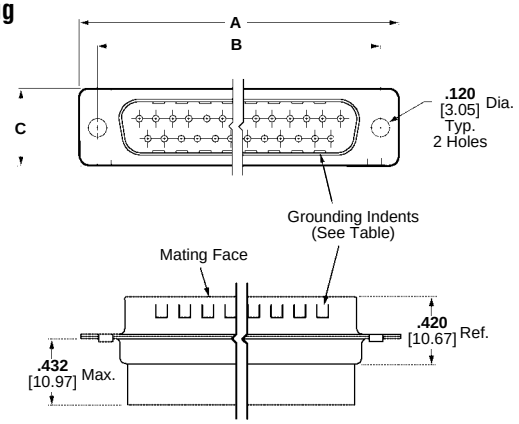

Receptacle

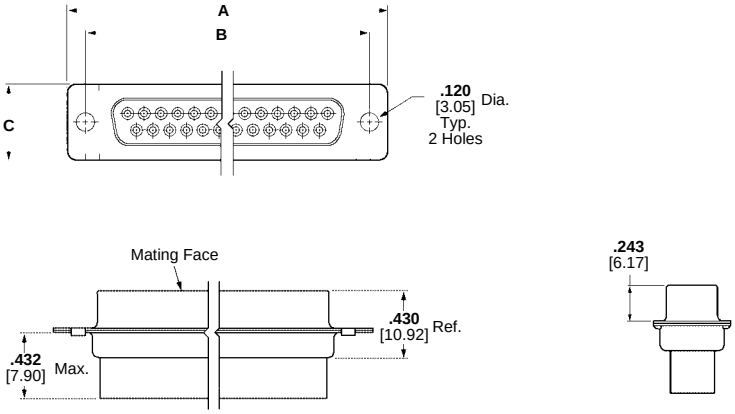

Shell Size	No. of Contact Positions	Dimensions A	Dimensions B	Dimensions C	Insert Material	Mounting Method	Part Numbers: Plug: Zinc Plated Shell	Part Numbers: Plug: Tin Plated Shell: Without Grounding Indents	Part Numbers: Plug: Tin Plated Shell: With Grounding Indents	Part Numbers: Receptacle: Zinc Plated Shell	Part Numbers: Receptacle: Tin Plated Shell
1	9	**1.213** 30.81	**.984** 24.99	**.494** 12.55	94V-0	Standard	205204-1	205204-3	205204-4	205203-1	205203-3
						Clinch Nut	—	745906-1	745906-2	—	745907-1
						Floating Bushing	205434-1	—	—	205439-1	—
2	15	**1.541** 39.14	**1.312** 33.33	**.494** 12.55	94V-0	Standard	205206-1	205206-2	205206-3	205205-1	205205-2
						Clinch Nut	—	745908-1	745908-2	—	745909-1 —
3	25	**2.088** 53.04	**1.852** 47.04	**.494** 12.55	94V-0	Standard	205208-1	207464-1	207464-2	205207-1	207463-1
						Clinch Nut	745036-1	—	745036-2	207516-1	207516-3 —
						Floating Bushing	205436-1	—	—	—	—
4	37	**2.729** 69.32	**2.500** 63.50	**.494** 12.55	94V-0	Standard	205210-1	205210-2	205210-3	205209-1	205209-2
						Clinch Nut	—	—	745135-2	—	207661-3 —
5	50	**2.635** 66.93	**2.406** 61.11	**.605** 15.37	94V-0	Standard	205212-1	205212-2	205212-3	205211-1	205211-2
						Clinch Nut	—	—	745883-2	—	745884-1

*Clinch nut mounting with M-3 threads.
Note: Plugs accept size 20 DF pin contacts and receptacles accept size 20 DF socket contacts.

For complete product information, order Catalog 82068

Products for Industrial & Commercial Applications
Dimensions are shown for reference purposes only.
Dimensions are in inches and millimeters unless otherwise specified. Values in brackets are metric equivalents.
Specifications subject to change.
Technical Support Center
1-800-522-6752
www.tycoelectronics.com

HDP-20 Basic Shielding Hardware Kits



Each kit contains:

- Connector
- Inner shield
- Outer shield

Contacts and ferrules must be purchased separately.

Material and Finish:

Connector Shells—Steel, tin plated
Connector Insert—94V-0 rated thermoplastic, black
Shield—Steel, tin plated

Related Product Data:

Contacts—page 1043
Ferrules—page 1024
Mateable Connectors:
HDE—pages 1026-1032
HDF—pages 1034-1038
HDP—pages 1039-1043
HDP Solder Cup—pages 1044-1046
HD-20 Board Mount—pages 1069-1094
Cable Clamps—pages 1048-1054
Mating Hardware—pages 1058-1065

Technical Documents:

Product Specifications
108-40005, 108-40030
Application Specifications
114-10000, 114-40030
Instruction Sheet
408-9010

Note: Instruction Sheets for AMP Tooling are packaged with the tooling. For additional information call the Technical Support Center: **1-800-522-6752.**

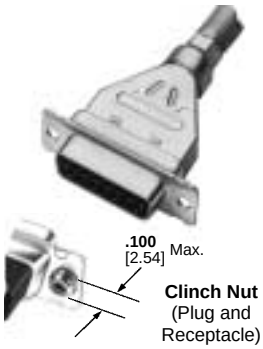

For complete product information, order Catalog 82068

Plug

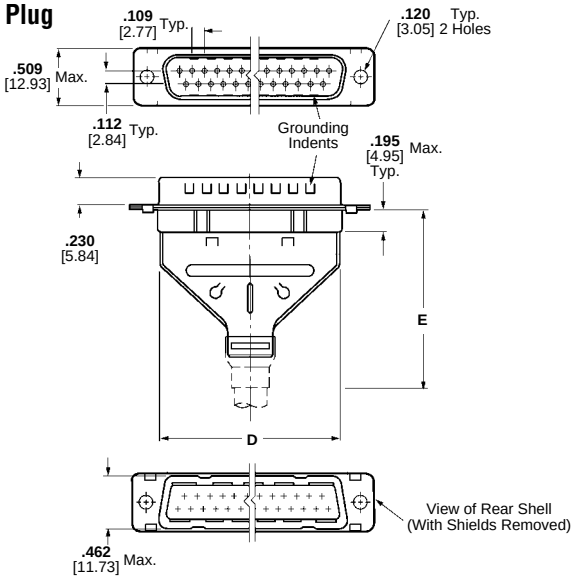

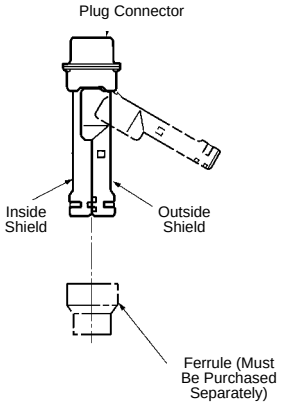

Receptacle

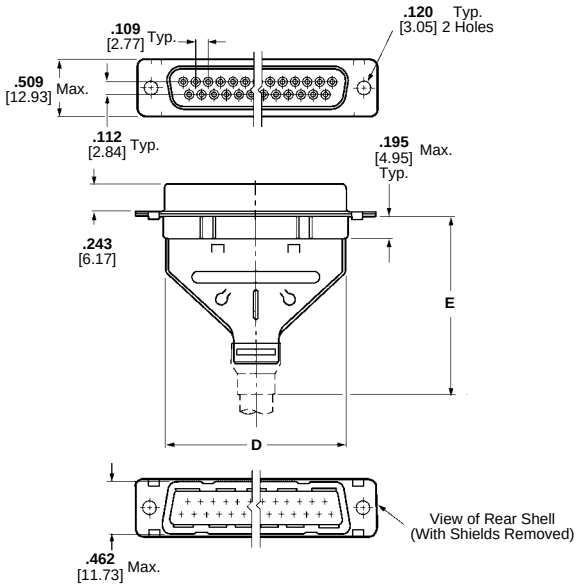

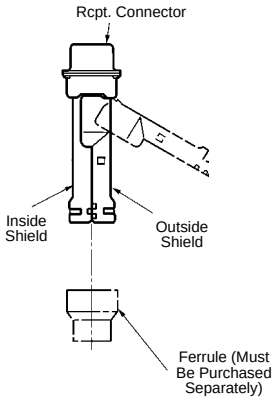

Shell Size	No. of Contact Positions	Dimensions D	Dimensions E	Recommended Cable Insulation Diameter	Max. Cable Dia.†	Mounting Method	Plug Kit Numbers	Receptacle Kit Numbers
1	9	**.700** 17.78	**1.535** 38.99	**.165-.455** 4.19-11.56	**.350** 8.89	Standard	747522-1	747523-1
						Clinch Nut	748526-1	748536-1
2	15	**1.024** 26.01	**1.535** 38.99	**.165-.455** 4.19-11.56	**.350** 8.89	Standard	747538-1	747539-1
						Clinch Nut	750636-1	787908-1
3	25	**1.576** 40.03	**1.535** 38.99	**.165-.455** 4.16-11.56	**.350** 8.89	Standard	747554-1	747555-1
						Clinch Nut	—	749763-1
4	37	**2.215** 56.26	**1.892** 48.06	**.338-.562** 8.59-14.28	**.450** 11.43	Standard	747570-1	747571-1
						Clinch Nut	786929-1	—
5	50	**2.120** 53.85	**1.876** 47.65	**.338-.480** 8.59-12.19	**.450** 11.43	Standard	747577-1	747578-1

*Clinch nut mounting with M-3 thread.
Notes: 1. Plugs accept size 20 DF pin contacts and receptacles accept size 20 DF socket contacts.
2. Components of the kits are shipped unassembled and bulk-packaged in quantities of 100 pieces.
†Maximum cable diameter after jacket and braid removed.

HDP-20 Shielding Hardware Enclosure Kits



Each Kit Contains:

- Connector
- Inner shield
- Outer shield
- Enclosure
- Two jackscrews

Contacts and ferrules must be purchased separately.

Material and Finish:

Connector Shells—Steel, tin plated.
Connector Insert—94V-0 rated thermoplastic, black
Shield—Steel, tin plated
Enclosure—PVC, black
Jackscrews—Zinc alloy

Related Product Data:

Contacts—page 1043
Ferrules—page 1024
Mateable Connectors:
HDE—pages 1026-1032
HDF—pages 1034-1038
HDP—pages 1039-1043
HDP Solder Cup—pages 1044-1046
HD-20 Board Mount—pages 1069-1094
Mating Hardware—pages 1058-1065

Technical Documents:

Product Specifications
108-40005, 108-40030
Application Specifications
114-10000, 114-40030
Instruction Sheet
408-9172

Note: Instruction Sheets for AMP Tooling are packaged with the tooling. For additional information call the Technical Support Center: **1-800-522-6752.**



Plug

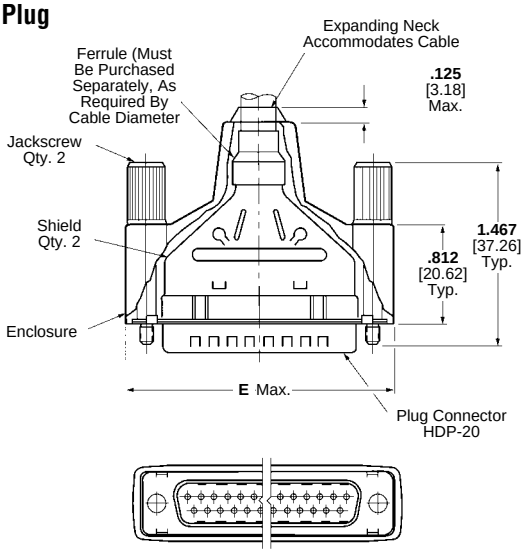

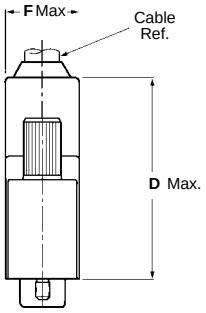

Receptacle

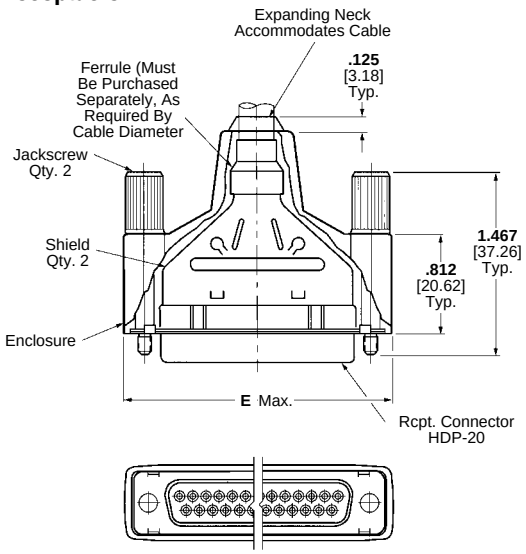

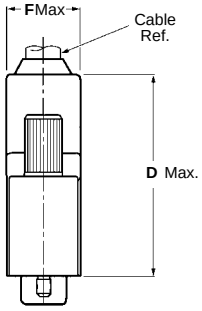

Shell Size	No. of Contact Positions	Dimensions D	E	F	Recommended Cable Insulation Diameter	Max. Cable Dia.†	Insert Material	Kit Numbers Plug	Receptacle	Shielding Enclosure Expansion Tool Cable O.D. (Max.)	Part Number
1	9	**1.660** 42.16	**1.355** 34.42	**.630** 16.00	**.190-.375** 4.83-9.53	**.350** 8.89	94V-0	747952-1	747951-1	**.355** 9.02	58241-4
2	15	**1.660** 42.16	**1.685** 42.80	**.630** 16.00	**.190-.375** 4.83-9.53	**.350** 8.89	94V-0	747954-1	747953-1		
3	25	**1.660** 42.16	**2.210** 56.13	**.630** 16.00	**.217-.435** 5.51-11.05	**.350** 8.89	94V-0	747956-1	747955-1	**.455** 11.56	58241-1
4	37	**2.010** 51.05	**2.865** 72.77	**.730** 18.54	**.338-.562** 8.59-14.28	**.450** 11.43	94V-0	747958-1	747957-1	**.562** 14.28	58241-2
5	50	**2.010** 51.05	**2.775** 70.49	**.730** 18.54	**.338-.562** 8.59-14.28	**.450** 11.43	94V-0	747960-1	747959-1		

Notes: 1. Plugs accept size 20 DF pin contacts and receptacles accept size 20 DF socket contacts.
2. Components of the kits are shipped unassembled and bulk-packaged in quantities of 100 pieces.
†Maximum cable diameter after jacket and braid removed.

For complete product information, order Catalog 82068

HDP-20 Connector Contacts, Precision Formed

Contact Size 20 DF
Pin Diameter .040 [1.02]

With Insulation Support

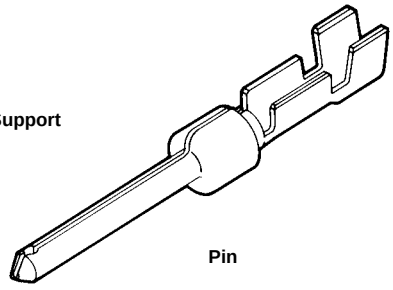

Pin

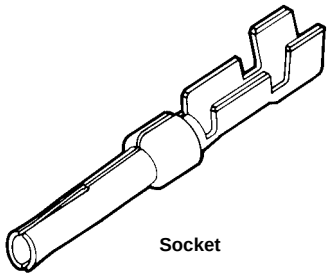

Socket

Wire Size Range AWG [mm²]	Ins. Dia. Max.	Contact Finish (Plating Code)	Contact Part Numbers: Pin, Strip Form	Pin, Loose Form	Socket, Strip Form	Socket, Loose Form	Hand Tools for Loose Form Contacts: PRO-CRIMPER II Hand Tool	CERTI-CRIMP Hand Tool (Color Code)	Applicators* for Strip Form Contacts
28-24 0.08-0.2	.040 1.02	A	66507-3	66507-9	66505-3	66505-9	58448-2	90302-1 (Blue Dot)	466423-4** 466901-1***
		B	3-66507-0	5-66507-7	6-66505-0	—			
		C	66507-4	1-66507-0	66505-4	1-66505-0			
		D	3-66507-1	5-66507-9	5-66505-7	5-66505-9			
	.060 1.52	A	66682-2	66682-4	66683-2	66683-4	—	90374-1 (Black Dot)	466963-1***
		B	66682-9	—	1-66683-0	—			
		D	66682-6	—	66683-7	—			
26-22 0.15-0.4	.050 1.27	A	745254-2	745254-6	745253-2	745253-6	—	90406-1 (Yellow Dot)	466968-1***
		B	1-745254-4	1-745254-6	1-745253-4	1-745253-6			
		C	745254-3	745254-7	745253-3	745253-7			
		D	1-745254-1	1-745254-3	1-745253-1	1-745253-3			
24-20 0.2-0.6	.060 1.52	A	66506-3	66506-9	66504-3	66504-9	58448-2	90302-1 (Red Dot)	466422-4** 466900-1***
		B	2-66506-4	5-66506-7	5-66504-9	6-66504-0			
		C	66506-4	1-66506-0	66504-4	1-66504-0			
		D	2-66506-5	5-66506-9	5-66504-6	5-66504-7			

*For Part Numbers of Special Applicators and Applicators for other model machines, call the Technical Support Center at **1-800-522-6752**.
**For use with AMP-O-LECTRIC Model "G" Terminating Machine.
***For use with AMP-O-MATIC Model II Stripper-Crimper Machine.

Without Insulation Support

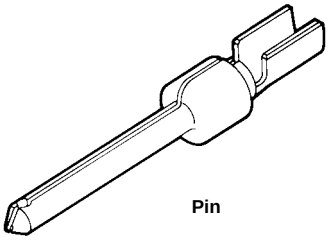

Pin

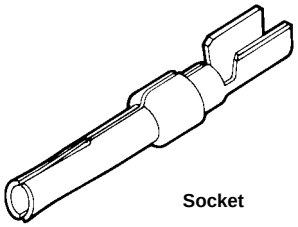

Socket

Wire Size Range AWG [mm²]	Ins. Dia. Max.	Contact Finish (Plating Code)	Contact Part Numbers: Pin, Strip Form	Socket, Strip Form	Hand Tools for Loose Form Contacts: CERTI-CRIMP Hand Tool (Color Code)	Applicators* for Strip Form Contacts
28-24 0.08-0.2	.068 1.73	A	205310-2	205311-3	90265-1 (Blue Dot)	466903-1***
		C	—	205311-4		
24-20 0.2-0.6	.068 1.73	A	205202-2	205201-3	90265-1 (Red Dot)	466902-1***
		C	205202-6	205201-6		
22-18 0.4-0.8	.068 1.73	A	745229-2	745230-2	90405-1 (Green Dot)	466996-1***
		B	1-745229-1	1-745230-1		
		C	745229-5	745230-5		
		D	—	745230-8		

Note: Wire insulation diameter is limited by the connector housing cavity and clearance for the insertion/extraction tool.

*For Part Numbers of Special Applicators and Applicators for other model machines, call the Technical Support Center at **1-800-522-6752**.
***For use with AMP-O-MATIC Model II Stripper-Crimper Machine.

Material and Finish:

Pin—Brass

Socket—Phosphor bronze

Plated

A—Select—Gold flash over nickel on entire contact, with additional .000030 [0.00076] gold on mating end

B—Duplex—.000030 [0.00076] gold on mating end, tin-lead on termination end, with entire contact nickel underplated

C—Gold flash over nickel on entire contact

D—Duplex—Gold flash on mating end, tin-lead on termination end, with entire contact nickel underplated

Related Product Data:

Connectors used with:

HDP—pages 1039-1043

Application Tooling:

Hand Tools—PRO-CRIMPER II - page 13003, CERTI-CRIMP (SAHT) - page 13012

Bench Machines—AMP-O-LECTRIC Model G Terminating Machine - page 13005, AMP-O-LECTRIC Model K Terminating Machine - page 13007, Entry Level Terminator - page 13006, AMP-O-MATIC Stripper Crimper - page 13011

Leadmakers—pages 13008-13009

Technical Documents:

Product Specification
108-40005

Application Specifications
114-10000, 114-40030

Note: Instruction Sheets for AMP Tooling are packaged with the tooling. For additional information call the Technical Support Center: **1-800-522-6752.**



Insertion/Extraction Tool
Part Number 91285-1

This tool includes interchangeable tips to Insert/Extract:

Size 22, 28-22 AWG
[0.4, 0.08-0.04 mm²] Crimp Contacts

(Instruction Sheet—408-9404)

For complete product information, order Catalog 82068

HD-20 Solder Cup Connectors

Product Facts

- Preloaded duplex-plated solder cup contacts
- Shell finish in choice of standard zinc chromate or tin
- One-piece 94V-0 rated plastic insert
- Anti-solderwicking contact design
- Intermateable with other subminiature D connectors
- Available in 9, 15, 25 and 37 position (shell sizes 1-4) plugs and receptacles
- Easy application without special application tools
- Shields offer full EMI shielding and ESD insulation
- Crimped shield termination for low impedance
- Variety of ferrules for all cable sizes
- Ferrule-to-shield crimp provides strain relief
- Shields may be post molded or covered with enclosures
- Recognized under the Component Program of Underwriters Laboratories Inc., File No. E28476
- Listed under Underwriters Laboratories Inc., Standard 1863, Communication Circuit Accessories, File No. E81956
- Certified by Canadian Standards Association, File No. LR 16455

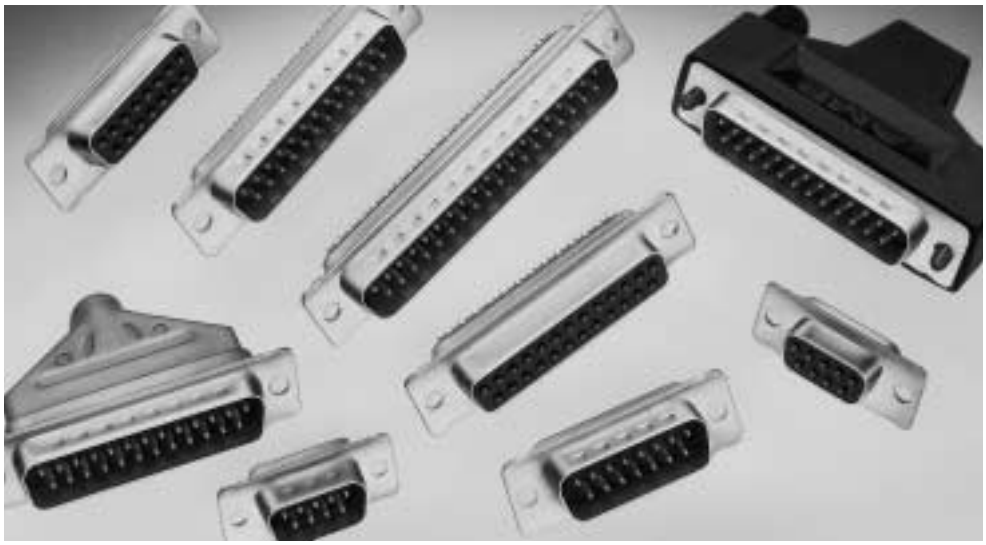

HD-20 Solder Cup Connectors



Material and Finish:

Shell—Steel, tin or zinc plated
Insert—94V-0 rated thermoplastic, black
Contacts—Phosphor bronze; duplex plated with gold flash on mating end, tin-lead on solder cup, with entire contact nickel underplated

Related Product Data:

Mateable Connectors:
HDE—pages 1026-1032
HDF—pages 1034-1038
HDP—pages 1039-1043
HD-20 Solder Cup—pages 1044-1046
HD-20 Board Mount—pages 1069-1094
Cable Clamps—pages 1048-1057
Mating Hardware—pages 1058-1065

Technical Documents:

Product Specification
108-40031
Instruction Sheet
408-9193

Note: Instruction Sheets for AMP Tooling are packaged with the tooling. For additional information call the Technical Support



Plug

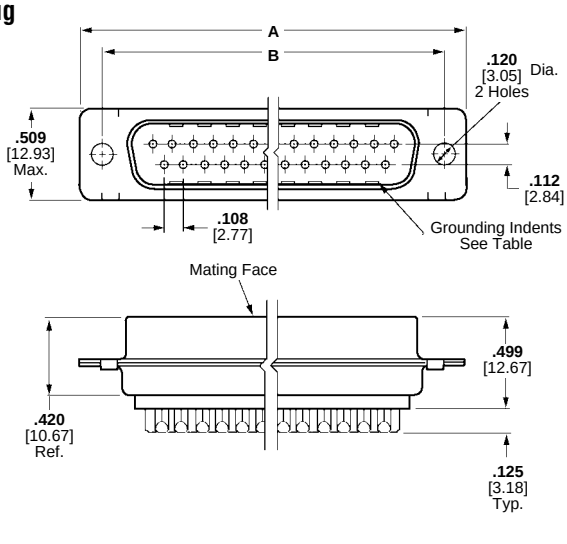

Receptacle

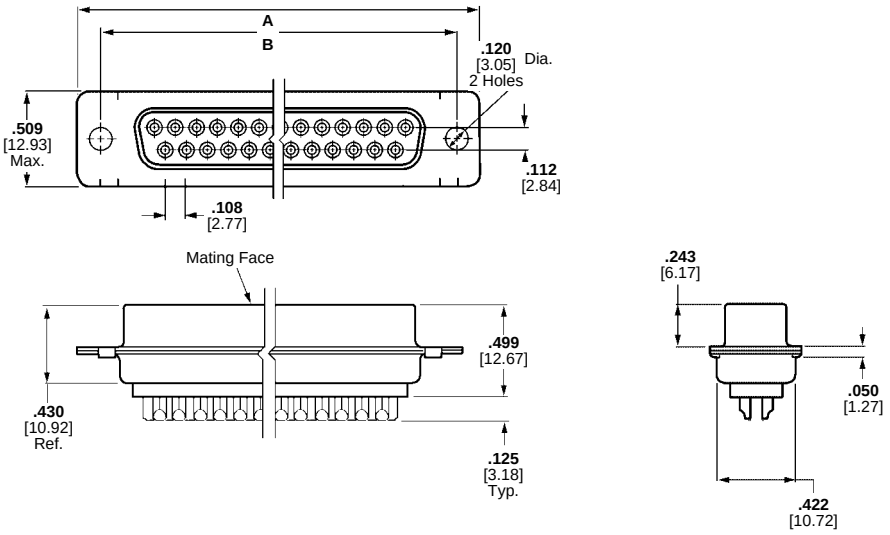

Shell Size	No. of Contact Positions	Dimensions		Plug Part Numbers		Receptacle Part Numbers	
		A	B	Tin Plated Shell	Zinc Plated Shell	Tin Plated Shell	Zinc Plated Shell
1	9	**1.213** 30.81	**.984** 24.99	747904-2	747904-4	747905-2	747905-4
2	15	**1.541** 39.14	**1.312** 33.33	747908-2	747908-4	747909-2	—
3	25	**2.088** 53.04	**1.852** 47.04	747912-2	747912-4	747913-2	747913-4
4	37	**2.729** 69.32	**2.500** 63.50	747916-2	747916-4	747917-2	—

HD-20 Solder Cup Shielding Hardware Enclosure Kits



Each kit contains

- Connector with preloaded, nonremovable contacts
- Inner shield
- Outer shield
- Enclosure
- Two jackscrews

Ferrules must be purchased separately.

Material and Finish:

Connector Shell—Steel, tin plated
Connector Insert—94V-0 rated thermoplastic, black
Shields—Steel, tin plated
Enclosure—PVC, black
Jackscrews—Zinc alloy
Contacts—Phosphor bronze
Contacts—Phosphor bronze; duplex plated with gold flash on mating end, tin-lead on solder cup, with entire contact nickel underplated

Related Product Data:

Ferrules—page 1024
Mateable Connectors:
HDE—pages 1026-1032
HDF—pages 1034-1038
HDP—pages 1039-1043
HD-20 Solder Cup—pages 1044-1046
HD-20 Board Mount—pages 1091-1094

Technical Documents:

Product Specification
108-40031
Application Specification
114-40030
Instruction Sheets
408-9193, 408-9217, 408-9218

Note: Instruction Sheets for AMP Tooling are packaged with the tooling. For additional information call the Technical Support Center: **1-800-522-6752.**



Plug

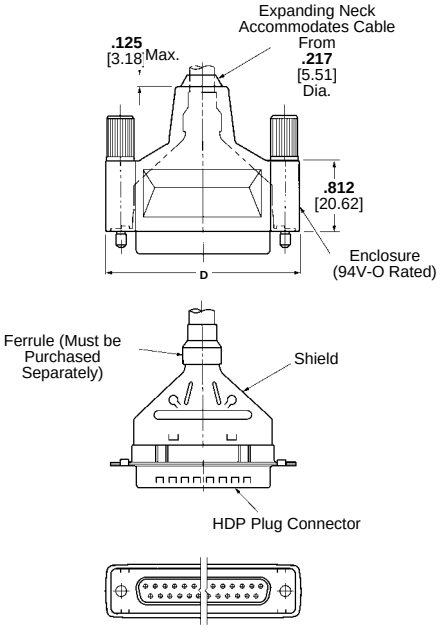

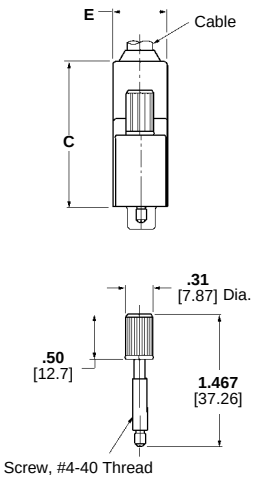

Receptacle

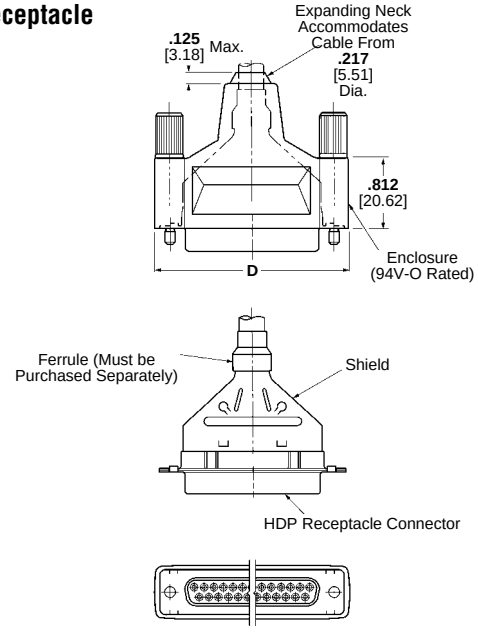

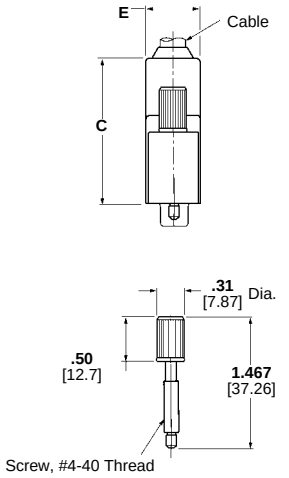

Shell Size	No. of Contact Positions	Dimensions C	D	E	Cable Insulation Diameter	Max. Cable Dia.†	Kit Numbers Plug	Receptacle	Shielding Enclosure Expansion Tool Cable O.D. (Max.)	Part Number
1	9	**1.660** 42.16	**1.350** 34.29	**.630** 16.00	**.190-.375** 4.83-9.53	**.350** 8.89	748046-1	748047-1	**.355** 9.02	58241-4
2	15	**1.660** 42.16	**1.680** 42.67	**.630** 16.00	**.190-.375** 4.83-9.53	**.350** 8.89	748048-1	748049-1		
3	25	**1.660** 42.16	**2.205** 56.01	**.630** 16.00	**.217-.435** 5.51-11.05	**.350** 8.89	748050-1	748051-1	**.465** 11.56	58241-1
4	37	**2.030** 51.56	**2.860** 72.64	**.730** 18.54	**.338-.562** 8.59-14.27	**.450** 11.43	748052-1	—	**.562** 14.28	58241-2

Note: Components of the kits are shipped unassembled and bulk-packaged in quantities of 100 pieces.
†Maximum cable diameter after jacket and braid removed.

Products for Industrial & Commercial Applications
Dimensions are shown for reference purposes only.
Dimensions are in inches and millimeters unless otherwise specified. Values in brackets are metric equivalents.
Specifications subject to change.
Technical Support Center
1-800-522-6752
www.tycoelectronics.com

Accessories for Cable and PCB Connectors



Numerous accessories are available for strain relief and cable clamping, shielding, connector-to-connector mating, connector-to-connector pc board mounting, and keying. These accessories are illustrated and tabled on the following pages.

The connector the accessory is used with is listed under the Related Product Data heading next to the accessory listing.

Unshielded Cable Clamps

Universal Cable Clamps for Jacketed Cable

Material and Finish:

Cable Clamp Housing—
Thermoplastic, black
Cable Clamp Wedge Set—
Thermoplastic, black
4-40 Mounting Screws—
Steel, zinc plated

Related Product Data:

Connectors used with:
HDE Metal-Shell—page 1028
HDP Metal-Shell—page 1040
Other accessory capabilities:
Spring Latches (Two Piece)—
page 1062

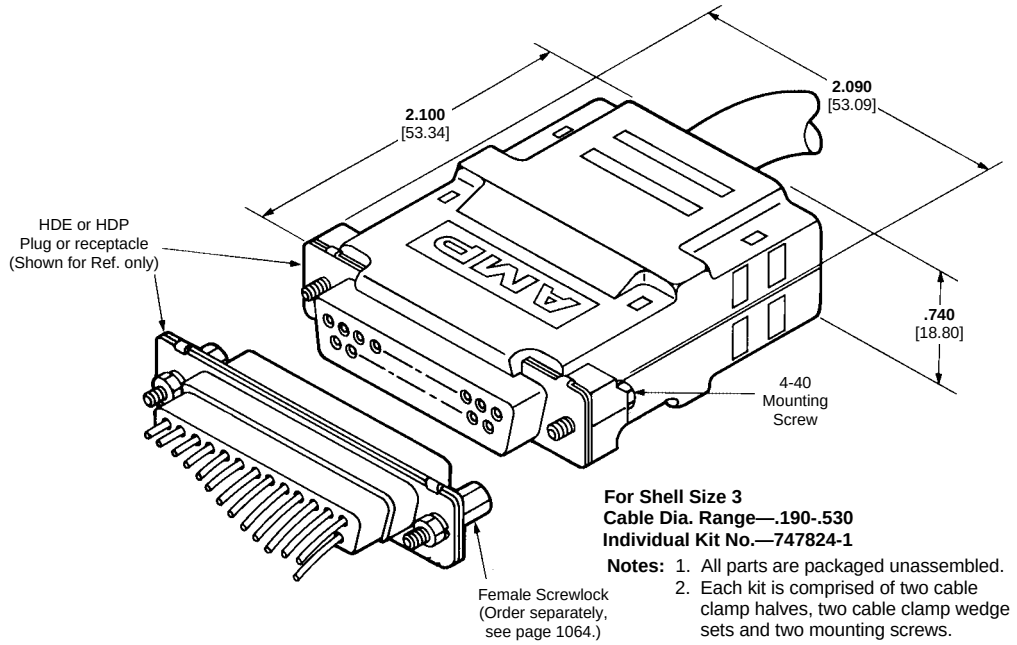

For Shell Size 3
Cable Dia. Range—.190-.530
Individual Kit No.—747824-1

Notes: 1. All parts are packaged unassembled.
2. Each kit is comprised of two cable clamp halves, two cable clamp wedge sets and two mounting screws.

Straight/90° Exit

Material and Finish:

Cable Clamp Housing—
Thermoplastic, gray
4-40 Mounting Screws—
Steel, zinc plated
4-40 Housing Screws & Hex Nuts
—Steel, zinc plated

Related Product Data:

Connectors used with:
HDE All-Plastic—page 1027
HDE Metal-Shell—page 1028
HDP Metal-Shell—page 1040
Other accessory capabilities:
Spring Latches (Two Piece)—
page 1062

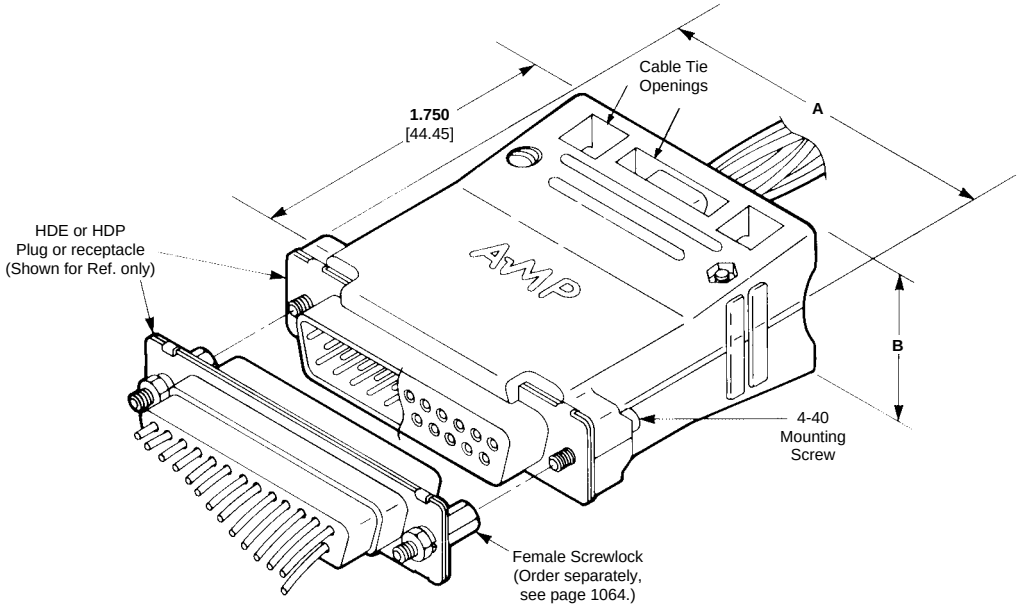

Shell Size	Dimensions A	Dimensions B	Cable Dia. (Max.)	Cable Clamp Kit Numbers Individual	Cable Clamp Kit Numbers Bulk Packed*
2	**1.550** 39.37	**.826** 20.98	**.350** 8.89	206471-1	—
3	**2.090** 53.09	**.826** 20.98	**.335** 8.51	206472-1	—
			.460 11.68	745134-1	—
4	**2.738** 69.55	**.826** 20.98	**.675** 17.15	745081-1	745081-2
5	**2.644** 67.16	**.938** 23.83	**.775** 19.69	745082-1	—

*Each part is individually bulk packed for multiple assembly orders.

Notes: 1. All parts are packaged unassembled.
2. Straight or 90° cable exit is achieved by inserting AMP-TY Cable Ties through cable tie openings and clamping the cable to one housing half only.

For complete product information, order Catalog 82068

Products for Industrial & Commercial Applications
Dimensions are shown for reference purposes only.
Dimensions are in inches and millimeters unless otherwise specified. Values in brackets are metric equivalents.
Specifications subject to change.
Technical Support Center
1-800-522-6752
www.tycoelectronics.com

Unshielded Cable Clamps

One-Piece, All-Plastic Cable Clamp for Jacketed Cable, 180°/120° Exit (HDP and HDE) (Quik-Snap)

The AMP Quik-Snap Backshell Kit is a one-piece, all-plastic cable clamp kit designed for use with either the AMPLIMITE HDP-20, HDP-22, or HDE, all-plastic or metal-shell connectors.

Kits are available for connector sizes 1, 2, 3, and 4 with a cable exit option of 180° or 120°.

Each kit contains:

- 1-Hinged, plastic clamp
- 2-Self-tapping screws
- 1-Strain relief clip
- 1-Cable exit gate plug (Used to close unused exit)

(For metal-shell connector applications an optional kit with 2 retainer clips and screws is available.)

Material and Finish:

Cover—Polypropylene, black
Strain Relief Clip—Stainless steel
Retainer Clip—Stainless steel
Screws—Carbon steel, zinc plated

Related Product Data:

Connectors used with:
HDP Metal-Shell—page 1040
HDE All-Plastic—page 1027
HDE Metal-Shell—page 1028

Technical Documents:

Instruction Sheet
408-9544

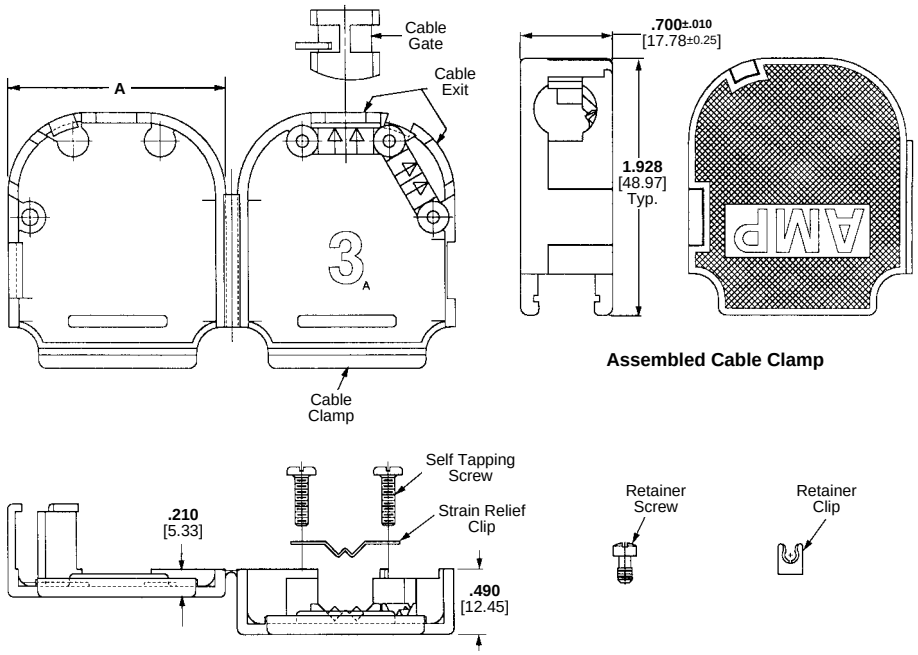

Shell Size	Cable Dia. Range (Ref.)	Dimension A	Kit Number* with Screws and Retainer Clips	Kit Number without Screws and Retainer Clips	Packaging
1	**.075-.250** 1.91-6.35	**.782** 19.86	749914-1	750100-2	Bulk Pkg.
			749914-2	750100-1	Unit Kit
2	**.170-.380** 4.32-9.65	**1.105** 28.07	749915-2	750101-1	Unit Kit
3	**.180-.460** 4.57-11.68	**1.650** 41.91	—	750078-1	Unit Kit
4	**.250-.550** 6.35-13.97	**2.296** 58.32	749916-1	750987-2	Bulk Pkg.
			749916-2	—	Unit Kit

*For metal-shell connectors only.

For complete product information, order Catalog 82068

Products for Industrial & Commercial Applications
Dimensions are shown for reference purposes only.
Dimensions are in inches and millimeters unless otherwise specified. Values in brackets are metric equivalents.
Specifications subject to change.
Technical Support Center
1-800-522-6752
www.tycoelectronics.com

Unshielded Cable Clamps

Low Profile Cable Clamps feature a two-piece construction which allows the two cover halves to be snapped together, no hardware is required for assembly. They can be used on plugs or receptacles and will not interfere with commonly used mating hardware. Sufficient Cable Support Gates (or a Cable Support Gate Latch) are supplied with each cable clamp kit to achieve adjustable clamping over a wide range of jacketed cable diameters.

Material:

Black thermoplastic

Related Product Data:

Connectors used with:

HDE All-Plastic—page 1027
HDE Metal-Shell—page 1028

Other accessory capabilities:

Male Screw Retainers—page 1058
Female Screwlocks—page 1059
Locking Posts and Slide Latches—pages 1060-1061
Latching Blocks—pages 1063, 1064

Technical Documents:

Instruction Sheet
408-6659

Straight Exit Low Profile for Jacketed Cable

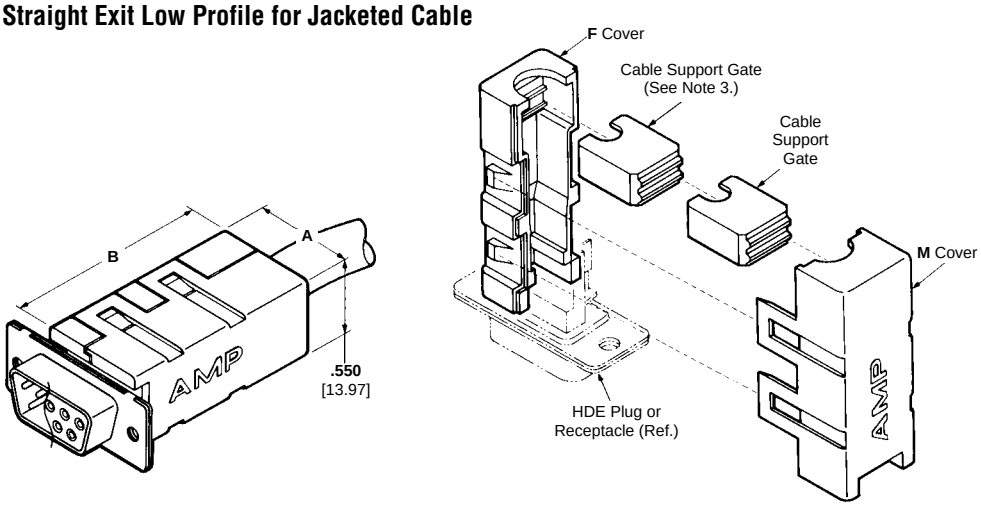

Shell Size	Dimensions A	Dimensions B When used On Plug	Dimensions B When used on Receptacle	Cable Dia. (Max.)	Cable Clamp Kit Numbers Individual	Cable Clamp Kit Numbers Bulk Packed*
1	**.732** 18.59	**1.582** 40.18	**1.533** 38.94	**.330** 8.38	745547-1	745547-2
2	**1.056** 26.82	**1.582** 40.18	**1.533** 38.94	**.425** 10.80	745553-1	745553-2
3	**1.604** 40.74	**1.700** 43.18	**1.651** 41.94	**.550** 13.97	745560-1	745560-2

*Each part is individually bulk packed for multiple kit orders.

Notes: 1. All parts are packaged unassembled.
2. Each kit is comprised of two cover halves (F and M) and an assortment of cable support gates.
3. Cable support gate must be used as shown for small diameter cable.

90° Exit Low Profile for Jacketed Cable

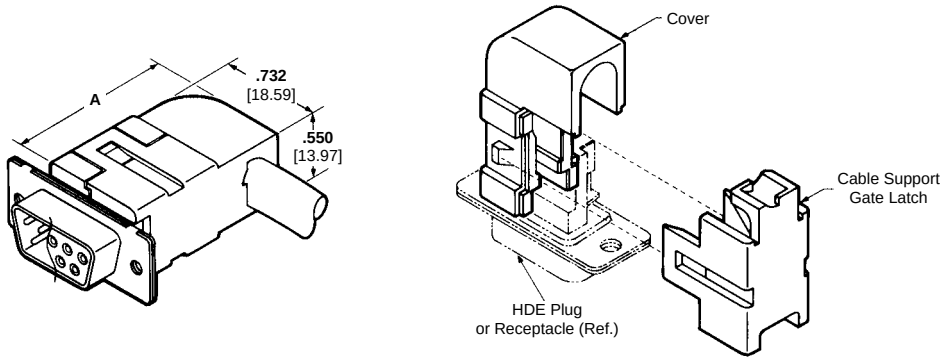

Shell Size	Dimension A When used on Plug	Dimension A When used on Receptacle	Cable Dia. (Max.)	Cable Clamp Kit Number Individual
1	**1.290** 32.77	**1.241** 31.52	**.330** 8.38	745550-1

Notes: 1. All parts are packaged unassembled.
2. Each kit is comprised of a cover half and an assortment of cable support gate latches.

For complete product information, order Catalog 82068

Products for Industrial & Commercial Applications
Dimensions are shown for reference purposes only.
Dimensions are in inches and millimeters unless otherwise specified. Values in brackets are metric equivalents.
Specifications subject to change.
Technical Support Center
1-800-522-6752
www.tycoelectronics.com

Unshielded Cable Clamps

Box and Lid Cable Clamps can be used on either plugs or receptacles and will not interfere with commonly used hardware. Their hinged construction allows easy assembly to a harness. A wide range of cable diameters are accommodated through the use of cable support gates, supplied with each cable clamp.

Cable clamps are available in kits with appropriate hardware for convenient plug/receptacle mating. See below for kits with Male Screw Retainers.

Material and Finish:

Cable Clamp Housing—Thermoplastic, black with textured finish

Gates—Thermoplastic, black

Flat Head Screws—Steel, black, zinc plated

Related Product Data:

Connectors used with:

HDP Metal-Shell—page 1040

Other accessory capabilities:

Male Screw Retainers—page 1058

Female Screwlocks—page 1059

Locking Posts and Slide Latches—pages 1060, 1061

Spring Latches (Two Piece)—page 1062

Latching Blocks—pages 1063, 1064

Technical Documents:

Instruction Sheet
408-7555

Material and Finish:

Cable Clamp Housing—Thermoplastic, black with textured finish

Gates—Thermoplastic, black

Flat Head Screws—Steel, black, zinc plated

Male Screw—Steel, zinc plated yellow chromate

Retaining Clip—Stainless steel

Related Product Data:

Connectors used with

HDP Metal-Shell—page 1040

Technical Documents:

Instruction Sheets
408-7555, 408-7837

Box and Lid Straight/90° Exit

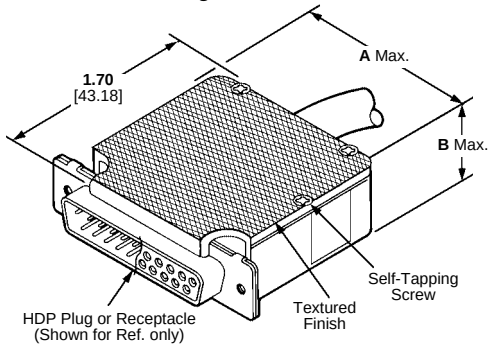

Shell Size 1 & 2

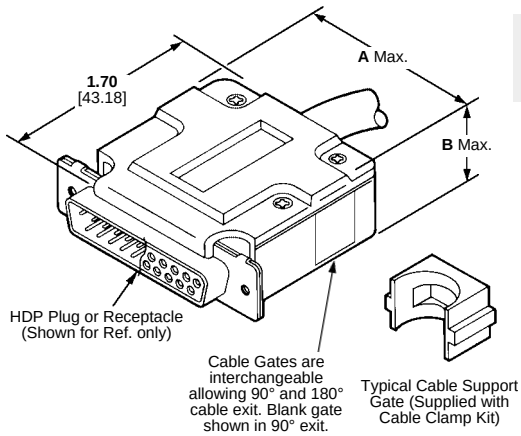

Shell Size 3 & 4

Shell Size	Dimensions		Cable Dia. Max. (Ref.)		Cable Clamp Kit Numbers	
	A	B	Straight Cable Exit	90° Cable Exit	Individual	Bulk Packed*
1	**.755** 19.18	**.630** 16.00	**.160** 4.06	**.160** 4.06	207467-1	207467-2
2	**1.078** 27.38	**.630** 16.00	**.320** 8.13	**.320** 8.13	207470-1	207470-2
3	**1.620** 41.15	**.770** 19.56	**.390** 9.91	**.390** 9.91	207345-1	207345-2
4	**2.268** 57.61	**.770** 19.56	**.640** 16.26	**.405** 10.29	207473-1	207473-2

*Each part is individually bulk packed for multiple kit orders.

Notes: 1. All parts are packaged unassembled.
2. Cable diameter is adjustable by changing cable support gates. Use the flat side of cable support gates for discrete wire, and the semicircle side for jacketed cable.
3. Cable clamp assemblies are available in kits with male screw retainers, see below.

Box and Lid Straight/90° Exit Cable Clamp Kits with Male Screw Retainers

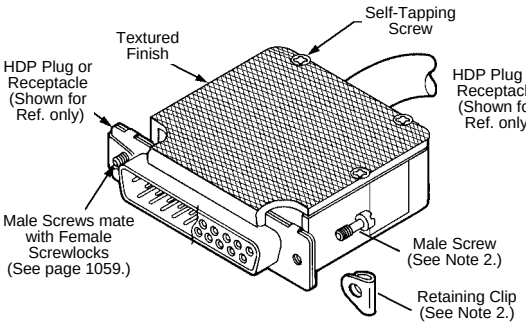

Shell Size 1 & 2

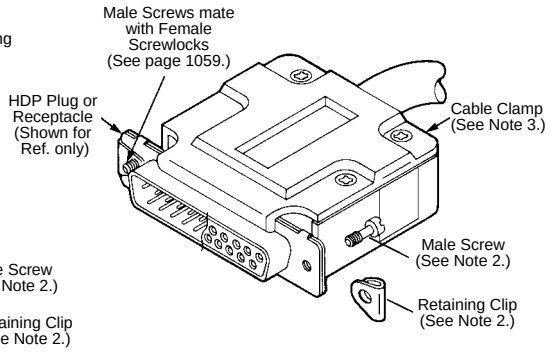

Shell Size 3 & 4

Shell Size	Cable Clamp Kit Numbers	
	Individual	Bulk Packed*
1	207908-1	207908-2
2	207908-4	—
3	207908-7	207908-8
4	1-207908-0	—

*Each part is individually bulk packed for multiple kit orders.

Notes: 1. All parts are packaged unassembled.
2. Each kit is comprised of a cable clamp and male screw retainer hardware (2 each). Male screw retainers are also available in kit form, see page 1058.
3. For ordering cable clamps separately, see above.

For complete product information, order Catalog 82068

Unshielded Cable Clamps

Clam Shell Straight/45° Exit

Straight/45° Exit Cable Clamps can be used on either a plug or receptacle and will not interfere with commonly used hardware, such as Male Screw Retainers, Female Screw-locks or Spring Latches and Latching Blocks. Their hinged construction allows easy assembly to a harness. Also, the straight or 45° angle of the cable exit is achieved by merely positioning the Cable Support Gate for the desired angle prior to installing the assembly onto the plug or receptacle.

Cable Clamp assemblies are available in kits with appropriate hardware for convenient plug/receptacle mating.

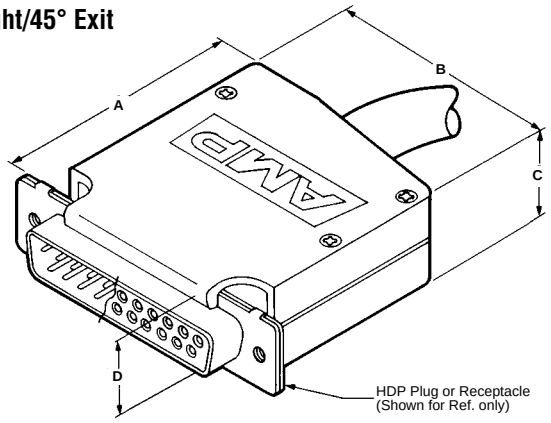

Shell Size	Dimensions				Cable Dia. (Max.)	Short Cable Clamp Part Numbers		Standard Cable Clamp Part Numbers	
	A	B	C	D		Individual	Bulk Packed*	Individual	Bulk Packed*
1	**1.625** 41.28	**.750** 19.05	**.620** 15.75	**.620** 15.75	**.256** 6.30	—	—	205729-1	205729-3
2	**1.250** 31.75	**1.073** 27.25	**.580** 14.73	**.620** 15.75	**.320** 8.13	206393-1	—	—	—
	1.625 41.28	**1.073** 27.25	**.620** 15.75	**.620** 15.75	**.320** 8.13	—	—	205730-1	205730-3
3	**1.250** 31.75	**1.615** 41.02	**.580** 14.73	**.620** 15.75	**.420** 10.67	206390-1	206390-3	—	—
	1.625 41.28	**1.615** 41.02	**.620** 15.75	**.620** 15.75	**.420** 10.67	—	—	205718-1	205718-4
4	**1.625** 41.28	**2.263** 57.48	**.620** 15.75	**.620** 15.75	**.490** 12.45	—	—	205731-1	—
5	**1.625** 41.28	**2.168** 55.07	**.730** 18.54	**.730** 18.54	**.600** 15.24	—	—	205732-1	—

*Each part is individually bulk packed for multiple assembly orders.

Notes: 1. All parts are packed unassembled.
2. Quantity of pan head screws supplied with cable clamp assembly varies with shell size.
3. Cable clamps are available in kits with male screw retainers, see below.
4. All pan head screws have combination cross-recessed and slotted heads.

Material and Finish:

Cable Clamp Housing—Thermoplastic, black with textured finish

Gates—Thermoplastic, black

Pan Head Screws, 6-32 Set Screw and 6-32 Square Nut—Steel, zinc plated (sizes 1 and 2 include self-tapping screws only)

Related Product Data:

Connectors used with:

HDP Metal-Shell—page 1040

Other accessory capabilities:

Male Screw Retainers—page 1058

Female Screwlocks—page 1059

Locking Posts and Slide Latches—pages 1060, 1061

Spring Latches (Two Piece)—page 1062

Latching Blocks—pages 1063, 1064

Technical Documents:

Instruction Sheet
408-7555

Clam Shell Straight/45° Exit Cable Clamp Kits with Male Screw Retainers

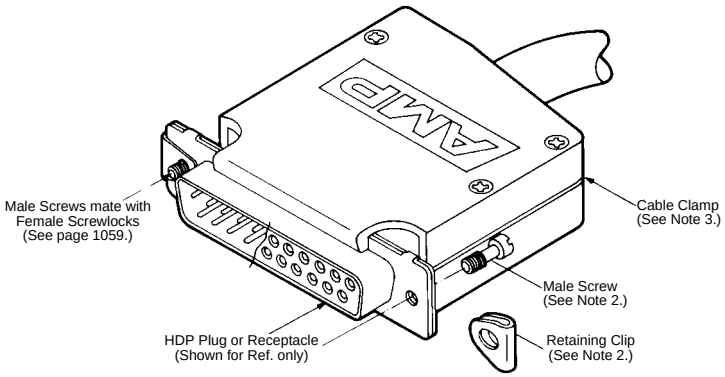

Shell Size	Short Cable Clamp Kit Numbers		Standard Cable Clamp Kit Numbers	
	Individual	Bulk Packed*	Individual	Bulk Packed*
1	—	—	206478-1	2-206478-0
2	1-206478-1	—	206478-2	—
3	1-206478-2	2-206478-6	206478-3	2-206478-2

*Each part is individually bulk packed for multiple assembly orders.

Notes: 1. All parts are packaged unassembled.
2. Each kit is comprised of a cable clamp and male screw retainer hardware (2 each). Male screw retainers are also available in kit form, see page 1058.
3. For ordering cable clamps separately, see above.

For complete product information, order Catalog 82068

Material and Finish:

Cable Clamp Housing—Thermoplastic, black with textured finish

Gates—Thermoplastic, black

Pan Head Screws, 6-32 Set Screw and 6-32 Square Nut—Steel, zinc plated (sizes 1 and 2 include self-tapping screws only)

Male Screw—Steel, zinc plated yellow chromate

Retaining Clip—Stainless steel

Related Product Data:

Connectors used with:
HDP Metal-Shell—page 1040

Technical Documents:

Instruction Sheets
408-7555, 408-7837

Products for Industrial & Commercial Applications
Dimensions are shown for reference purposes only.
Dimensions are in inches and millimeters unless otherwise specified. Values in brackets are metric equivalents.
Specifications subject to change.
Technical Support Center
1-800-522-6752
www.tycoelectronics.com

Unshielded Cable Clamps

Straight/90° Exit

Straight/90° Exit Cable Clamps can be used on a plug or receptacle and will not interfere with commonly used mating hardware. Their three-piece construction allows easy assembly to a cable harness. Also, the same cable clamp components are used for both straight and 90° cable exit applications. This is accomplished by simply positioning the Male and Female Panels on the Yoke for the desired angle.

Material:

Black thermoplastic

Related Product Data:

Connectors used with:
HDE All-Plastic—page 1027
HDE Metal-Shell—page 1028
HDP Metal-Shell—page 1040
Other accessory capabilities:
Female Screwlocks—page 1059
Locking Posts and Slide Latches—pages 1060, 1061
Latching Blocks—pages 1064, 1065

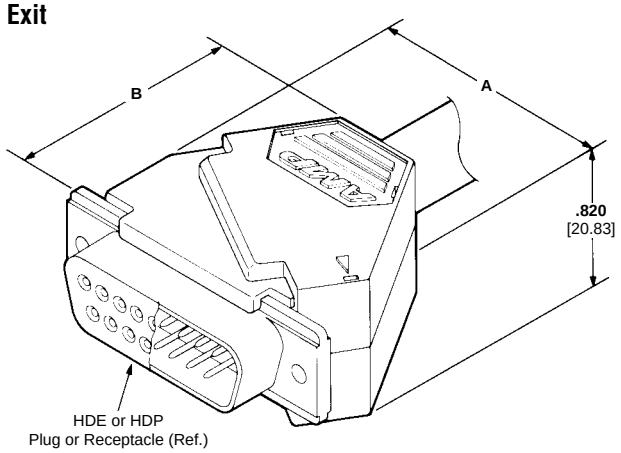

Straight Cable Exit Application

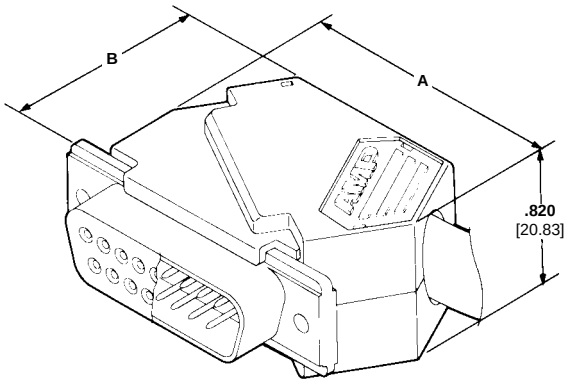

90° Cable Exit Application

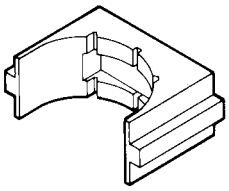

Typical Cable Support Gate
(Supplied with Cable Clamp Kit)

Shell Size	Cable Clamp Configuration	Dimensions A	Dimensions B	Cable Dia.	Cable Clamp Kit Numbers Individual
3	Straight Exit	**1.906** 48.41	**1.672** 42.47	**.550** 13.97	745306-1
	90° Exit	**2.066** 52.48	**1.396** 35.46		
4	Straight Exit	**2.424** 61.57	**1.820** 46.23	**.750** 19.05	745311-1
	90° Exit	**2.638** 67.01	**1.596** 40.54		

Notes: 1. All parts are packaged unassembled.
2. Each cable clamp assembly includes a yoke, male panel, female panel and four cable support gates. The cable diameter is adjustable by changing the cable support gates.

For complete product information, order Catalog 82068

Shielded and Unshielded Cable Clamps

Straight Exit RFI/EMI Shields for Jacketed Cable (Two-Piece)

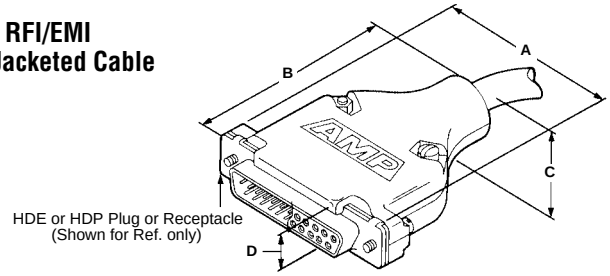

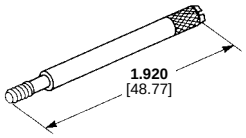

4-40 Male Jackscrew Kit Nos.:
747784-8 (bulk packed)*†
*Each part is individually bulk packed for multiple kit orders.
†Slotted for screwdriver use.

This RFI/EMI shield allows cable to be fully prepared and terminated to the connector before the shield is installed. During installation, the shield of the jacketed cable is folded back and compressed into the cable opening of the RFI/EMI shield. For greater cable support and/or shielding effectiveness, split-ring and crimp ferrules are available (pages 1055-1057).

Shell Size	Dimensions A	B	C	D	Cable O.D. (Max.)	Die Cast Shield Kit Numbers	Metal-Plated Plastic Shield Kit Numbers	Grommet Sets: Cable O.D. Range	No. of Grommets Per Set	Part Number
1	**1.215** 30.86	**1.910** 48.51	**.550**** 13.97	**.620**** 15.75	**.200** 5.08	745171-2	745854-5	—	—	—
					.240 6.10	745171-1	745854-3	—	—	—
					.370 9.40	745171-5	745854-1	**.185-.320** 4.70-8.13	4	747746-1
2	**1.545** 39.24	**1.910** 48.51	**.620** 15.75	**.620** 15.75	**.225** 5.72	745172-3	747099-7	—	—	—
					.300 7.62	745172-2	747099-5	—	—	—
					.375 9.53	745172-1	747099-3	**.185-.320** 4.70-8.13	4	747746-1
					.430 10.92	1-745172-3	747099-1	—	—	—
3	**2.090** 53.09	**1.920** 48.77	**.680** 17.27	**.620**** 15.75	**.280** 7.11	745173-5	745833-9	—	—	—
					.350 8.89	745173-4	745833-7	—	—	—
					.430 10.92	745173-3	745833-5	—	—	—
					.480 12.19	745173-2	745833-3	—	—	—
					.530 13.46	745173-1	745833-1	**.255-.470** 6.48-11.94	6	747973-1
4	**2.738** 69.55	**1.920** 48.77	**.800** 20.32	**.620** 15.75	**.350** 8.89	745174-5	747100-9	—	—	—
					.425 10.80	745174-4	747100-7	—	—	—
					.500 12.70	745174-3	747100-5	—	—	—
					.530 13.46	2-745174-7	1-747100-1	**.255-.470** 6.48-11.94	6	747973-1
					.575 14.61	745174-2	747100-3	—	—	—
					.650 16.51	745174-1	747100-1	—	—	—
5	**2.644** 67.16	**1.920** 48.77	**.900** 22.86	**.730** 18.55	**.375** 9.53	745175-6	—	—	—	—
					.450 11.43	745175-5	747098-9	—	—	—
					.525 13.34	745175-4	747098-7	**.255-.470** 6.48-11.94	6	747973-1
					.600 15.24	745175-3	747098-5	—	—	—
					.675 17.15	745175-2	—	—	—	—
					.750 19.05	745175-1	747098-1	—	—	—

Material and Finish:

Die Cast Shield—Zinc alloy, plated bright nickel over bright copper
Metal-Plated Plastic Shield—Thermoplastic, plated nickel over copper
Plastic Shield—Thermoplastic, black
4-40 Fillister Head Screws and Hex Nuts—Steel, zinc plated
4-40 Mounting Screws—Steel, zinc plated
Jackscrews—Stainless Steel, passivated

Related Product Data:

Ferrules—pages 1056, 1057
Connectors used with:
HDE Metal-Shell—page 1028
HDP Metal-Shell (Tin plated only)—pages 1021, 1040
Other accessory capabilities:
Spring Latch (Two-Piece)—page 1062

Technical Documents:

Product Specification
108-40032
Instruction Sheet
408-6609

Cable Clamp Kits with Grommets

Shell Size	Dimensions A	B	C	D	Cable O.D. Range	No. of Grommets Per Set	Kit Numbers: Die Cast Shield	Metal-Plated Plastic Shield	Unshielded Plastic with Jackscrews	Unshielded Plastic Shield
1	**1.215** 30.86	**1.910** 48.51	**.550**** 13.97	**.620**** 15.75	**.185-.320** 4.70-8.13	4	748676-1	748677-1	787033-1	748678-1
2	**1.545** 39.24	**1.910** 48.51	**.620** 15.75	**.620** 15.75	**.185-.320** 4.70-8.13	4	748676-2	748677-2	—	748678-2
3	**2.090** 53.09	**1.920** 48.77	**.680** 17.27	**.620**** 15.75	**.255-.470** 6.48-11.94	6	748676-3	748677-3	787033-3	748678-3
4	**2.738** 69.55	**1.920** 48.77	**.800** 20.32	**.620** 15.75	**.255-.470** 6.48-11.94	6	748676-4	748677-4	—	748678-4
5	**2.644** 67.16	**1.920** 48.77	**.900** 22.86	**.730** 18.54	**.255-.470** 6.48-11.94	6	748676-5	748677-5	—	748678-5

Notes: 1. All parts are packaged unassembled.
2. Jackscrews can be purchased separately.
3. Split-ring and crimp ferrules are shown on pages 1055-1057.
4. These cable clamps will not accept connector housings with clinch nuts.

** The following dimensions apply to the plastic and metal-plated plastic cable clamps: Size 1: C = .570 [14.48], D = .630 [16.0]
Size 3: D = .640 [16.26]

For complete product information, order Catalog 82068

Products for Industrial & Commercial Applications
Dimensions are shown for reference purposes only.
Dimensions are in inches and millimeters unless otherwise specified. Values in brackets are metric equivalents.
Specifications subject to change.
Technical Support Center
1-800-522-6752
www.tycoelectronics.com

Shielded Cable Clamps

Crimp Ferrules for Braided Cable Shield (See pages 1056 & 1057 for Inner and Outer Ferrule Part Numbers.)

Material and Finish:

Outer Ferrule—Copper, plated .000100 [0.00254] min. tin

Inner Ferrule—.023 [0.58] thick brass, plated .000050 [0.00127] tin over copper

Related Product Data:

Shields used with:
Straight Exit—page 1054

Technical Documents:

Product Specification
108-40032

Instruction Sheets
408-9315 Hand Tool
408-9318 Die Sets

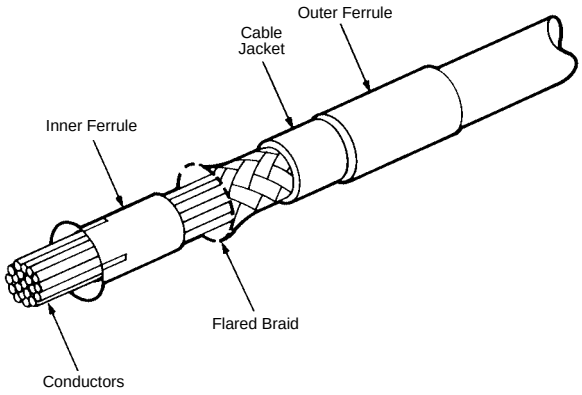

Application Tooling

Note: Crimp ferrules are for use with braided shields only. Crimp ferrules require application tooling with die sets for attachment to cable.



Pneumatic Bench Tool Part Number 312522-2 **(Requires Die Set Holder Part Number** 58240-1**.)**



AMP Hand Tool Part Number 543344-1
(See pages 1053 & 1054 for Hand Tool Die Set Numbers)

Split-Ring Ferrules for Foil or Braided Cable Shield (See pages 1056 & 1058 for Split-Ring Ferrule Part Numbers.)

Material:

Aluminum

Related Product Data:

Shields used with:
Straight Exit—page 1054

Technical Document:

Product Specification
108-40032

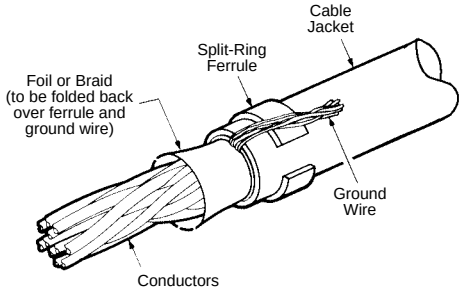

Note: Split-ring ferrules cannot be used with outer and inner ferrules. Split-ring ferrules are suitable for both foil and braided shields. The ferrules do not require tooling for assembly.

For complete product information, order Catalog 82068

Shielded Cable Clamps

Crimp and Split-Ring Ferrules

Shell Size	Cable Dia. (Max.)	When using these Shield Kits: Straight Exit Shield Kit Numbers: Die Cast	Straight Exit Shield Kit Numbers: Metal-Plated Plastic	90° Exit Die Cast Shield Kit Numbers: With Slide Latch	90° Exit Die Cast Shield Kit Numbers: Without Slide Latch	Use these Ferrules: Split-Ringt Ferrule Numbers	Crimp Ferrule Numbers and Tooling Numbers**: Inner	Outer	Die Set For Hand Tool 543344-1	Applicator Die Set
1	**.200** 5.08	745171-2	745854-5	—	—	745508-2	—	—	—	—
	.240 6.10	745171-5	745854-1	—	—	—	1-745129-8	745130-8	543013-2	813809-1
	.240 6.10	745171-1	745854-3	—	—	745508-3	1-745129-6	745130-8	543013-1	813809-1
	.280 7.11	745171-5	745854-1	—	—	—	3-745129-4	1-745130-6	1-543013-7	813809-7
	.370 9.40	745171-5	745854-1	—	—	745508-6	1-745129-7	1-745130-0	543013-6	813809-5
2	**.225** 5.72	745172-3	747099-7	745652-4	—	745508-3	—	—	—	—
	.240 6.10	745172-1	747099-3	745652-2	745918-2	—	1-745129-8	745130-8	543013-2	813809-1
	.240 6.10	—	747099-1	745652-1	—	—	2-745129-1	745130-8	543013-3	813809-1
	.280 7.11	—	747099-1	745652-1	—	—	3-745129-2	1-745130-6	1-543013-6	813809-7
	.300 7.62	745172-2	747099-5	745652-3	745918-3	745508-4	—	—	—	—
	.350 8.90	—	747099-1	745652-1	—	—	2-745129-0	745130-9	543013-4	813809-2
	.365 9.27	745172-1	747099-3	745652-2	745918-2	—	1-745129-7	1-745130-0	543013-6	813809-5
	.375 9.53	745172-1	747099-3	745652-2	745918-2	745508-6	—	—	—	—
	.430 10.92	1-745172-3	747099-1	745652-1	—	745508-1	1-745129-9	1-745130-1	543013-7	813809-3
3	**.240** 6.10	745173-3	745833-5	745653-3	747194-3	—	2-745129-1	745130-8	543013-3	813809-1
	.280 7.11	745173-5	745833-9	745653-5	—	745508-4	—	—	—	—
	.280 7.11	745173-3	745833-5	745653-3	747194-3	—	3-745129-2	1-745130-6	1-543013-6	813809-7
	.350 8.90	745173-4	745833-7	745653-4	—	745508-5	—	—	—	—
	.350 8.90	745173-3	745833-5	745653-3	747194-3	—	2-745129-0	745130-9	543013-4	813809-2
	.350 8.90	745173-1	745833-1	745653-1	—	—	2-745129-4	745130-9	543013-5	813809-2
	.430 10.92	745173-3	745833-5	745653-3	747194-3	745508-1	1-745129-9	1-745130-1	543013-7	813809-3
	.430 10.92	745173-1	745833-1	745653-1	—	—	2-745129-3	1-745130-1	543013-8	813809-3
	.480 12.19	745173-2	745833-3	745653-2	—	745508-8	—	—	—	—
	.530 13.46	745173-1	745833-1	745653-1	—	745508-9	2-745129-2	1-745130-2	1-543013-0	813809-4

*For split-ring ferrules, Min. O.D. is .040 [1.02] smaller than Max. O.D.
**For inner and outer ferrules, Min. O.D. is .050 [1.27] smaller than Max. O.D. At the Max. cable O.D. the Min. insulation thickness is .060 [1.52].

Continued on Page 1057

Shielded Cable Clamps

Crimp and Split-Ring Ferrules

Shell Size	Cable Dia. (Max.)	When using these Shield Kits: Straight Exit Shield Kit Numbers: Die Cast	Straight Exit Shield Kit Numbers: Metal-Plated Plastic	90° Exit Die Cast Shield Kit Numbers: With Slide Latch	90° Exit Die Cast Shield Kit Numbers: Without Slide Latch	Use these Ferrules: Split-Ring* Ferrule Numbers	Crimp Ferrule Numbers and Tooling Numbers**: Inner	Outer	Die Set for Hand Tool 543344-1	Applicator Die Set
4	**.240** 6.10	745174-4	747100-7	—	—	—	2-745129-1	745130-8	543013-3	813809-1
	.280 7.11	745174-4	747100-7	—	—	—	3-745129-2	1-745130-6	1-543013-6	813809-7
	.350 8.90	745174-5	747100-9	—	—	745508-5	—	—	—	—
	.350 8.90	745174-4	747100-7	—	—	—	2-745129-0	745130-9	543013-4	813809-2
	.430 10.92	745174-4	747100-7	—	—	745508-1	1-745129-9	1-745130-1	543013-7	813809-3
	.500 12.70	745174-3	747100-5	—	—	745508-8	—	—	—	—
	.525 13.34	745174-1	747100-1	—	—	—	2-745129-6	1-745130-2	1-543013-1	813809-4
	.575 14.61	745174-2	747100-3	—	—	1-745508-0	—	—	—	—
	.650 16.51	745174-1	747100-1	—	—	1-745508-1	2-745129-5	1-745130-3	1-543013-3	—
5	**.240** 6.10	745175-6	1-747098-1	—	—	—	1-745129-8	745130-8	543013-2	813809-1
	.350 8.90	745175-4	747098-7	—	—	—	2-745129-4	745130-9	543013-5	813809-2
	.365 9.27	745175-6	1-747098-1	—	—	—	1-745129-7	1-745130-0	543013-6	813809-5
	.375 9.53	745175-6	1-747098-1	—	—	745508-6	—	—	—	—
	.430 10.92	745175-4	747098-7	—	—	—	2-745129-3	1-745130-1	543013-8	813809-3
	.450 11.43	745175-5	747098-9	—	—	745508-7	—	—	—	—
	.525 13.34	745175-4	747098-7	—	—	745508-9	—	—	—	—
	.530 13.46	745175-4	747098-7	—	—	—	2-745129-2	1-745130-2	1-543013-0	813809-4
	.600 15.24	745175-3	747098-5	—	—	1-745508-0	—	—	—	—
	.650 16.51	745175-1	747098-1	—	—	—	2-745129-9	1-745130-3	1-543013-4	—
	.675 17.15	745175-2	—	—	—	1-745508-1	—	—	—	—
	.750 19.05	745175-1	747098-1	—	—	1-745508-2	2-745129-8	1-745130-4	1-543013-5	—

*For split-ring ferrules, Min. O.D. is .040 [1.02] smaller than Max. O.D.
**For inner and outer ferrules, Min. O.D. is .050 [1.27] smaller than Max. O.D. At the Max. cable O.D. the Min. insulation thickness is .060 [1.52].
Note: Refer to page 1054 for Application Tooling for ferrules.

Hardware

Male Screw Retainers for Metal-Shell Connectors (HDE and HDP)

Material and Finish:

Male Screw—Steel, zinc plated clear or yellow chromate

Retaining Clip—.012 [0.31] stainless steel

Related Product Data:

Connectors used with:

HDE Metal-Shell—page 1028

HDP Metal-Shell—page 1040

Technical Documents:

Instruction Sheet
408-7837

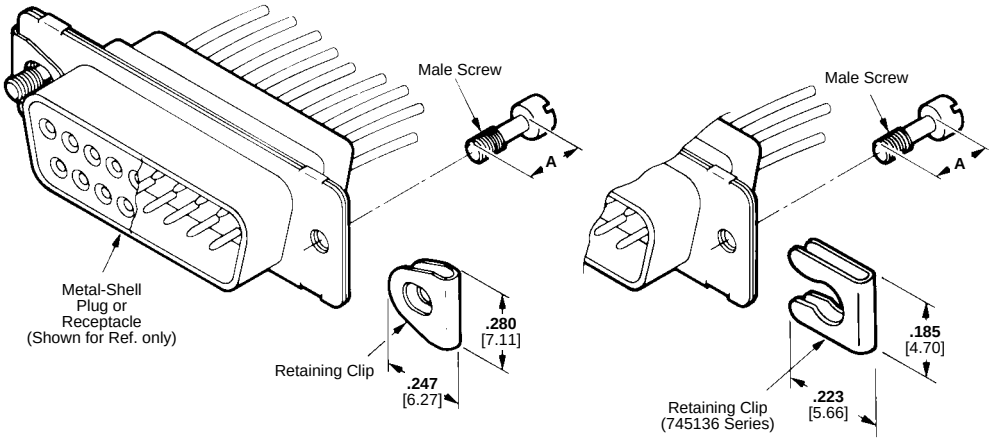

Male Screw Finish	Thread Size	Dimension A	Male Screw Retainer Kit Numbers	
			Individual	Bulk Packed*
Yellow Chromate	4-40	**.220** 5.59	205980-1	205980-3
		.200 5.08	745136-1	745136-2
	M3 (Metric)	**.225** 5.72	207871-1	—
Clear Chromate	4-40	**.220** 5.59	205980-4	205980-5
		.200 5.08	745136-3	745136-4

*Each part is individually bulk packed for multiple kit orders.

Notes: 1. All parts are packaged unassembled.
2. Each kit is comprised of two male screws and two retaining clips. Male screw retainers are also furnished as part of cable clamp kits (pages 1051 and 1052).
3. Male screw retainers mate with female screwlocks (page 1059) and with HD metal-shell board mount connectors featuring 4-40 threaded inserts or female screwlocks.
4. Retaining clip must be assembled onto connector flanges with threaded hole toward wire side of connector.

Male Screw Retainers for All-Plastic Connectors (HDE)

Material and Finish:

Male Screw—Steel, zinc plated yellow chromate

Retaining Clip—.012 [0.51] stainless steel

Related Product Data:

Connectors used with:

HDE All-Plastic—page 1027

Technical Documents:

Instruction Sheet
408-7837

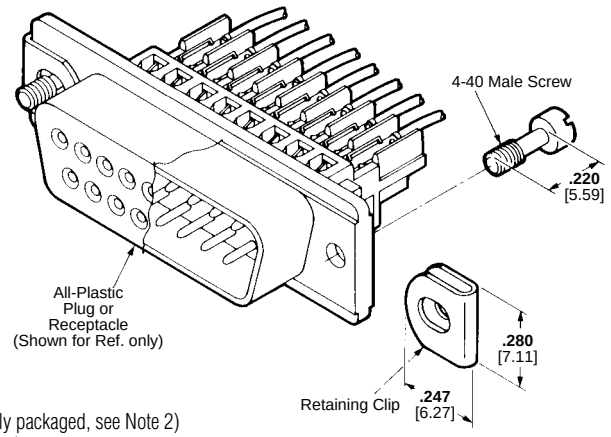

Kit Numbers:
745647-1 (Individually packaged, see Note 2)
745647-2 (Bulk packed)*

*Each part is individually bulk packed for multiple kit orders.

Notes: 1. All parts are packaged unassembled.
2. Each kit is comprised of two 4-40 male screws and two retaining clips.
3. Male screw retainers mate with female screwlocks (page 1059), with HD All-Plastic board mount connectors featuring integral standoffs with 4-40 threaded inserts and female screwlocks.
4. Retaining clips must be assembled onto connector flanges with threaded hole toward wire side of connector.

For complete product information, order Catalog 82068

Products for Industrial & Commercial Applications
Dimensions are shown for reference purposes only.
Dimensions are in inches and millimeters unless otherwise specified. Values in brackets are metric equivalents.
Specifications subject to change.
Technical Support Center
1-800-522-6752
www.tycoelectronics.com

Hardware

Female Screwlocks for Metal-Shell and All-Plastic Connectors (HDE, HDF, HDP)

Material and Finish:

All Parts—Cold rolled steel, zinc plated clear or yellow chromate

Related Product Data:

Connectors used with:

HDE Metal-Shell or All-Plastic—pages 1027, 1028

HDF Metal-Shell or All-Plastic—pages 1034-1038

HDP Metal-Shell—page 1040

HD Board Mount—pages 1069-1094

Technical Documents:

Instruction Sheet
408-7837



Nut Driver, Part Number 811262-1
(Used for assembling female screwlocks to connector flange)

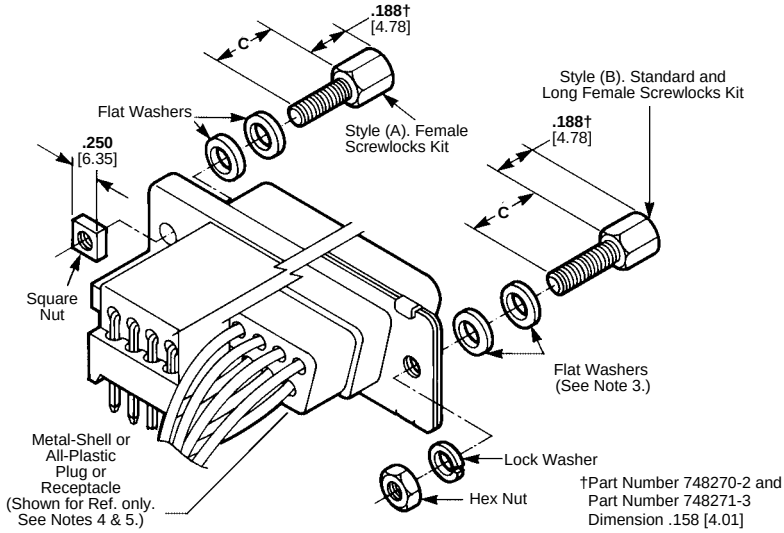

Connector Used with	Style	Dimension C	Thread Size	Finish	Kit Number	
					Individual	Bulk Packed△
HD All-Plastic Right-Angle Plugs and Receptacles	(A)	**.250** 6.35	4-40	Yellow Chromate	207952-1	—
				Clear Chromate	207952-3	—
HDE Metal-Shell or All-Plastic Plugs and Receptacles	(B)	**.250** 6.35	4-40	Yellow Chromate	745563-1	745563-2
				Clear Chromate	745563-3	745563-4
HDP or HDF Metal-Shell or All-Plastic Plugs and Receptacles	(B)	**.312** 7.93	4-40	Yellow Chromate	205817-1	205817-2
				Clear Chromate	205817-3	205817-4
			M3 (Metric)	Yellow Chromate	207872-1	—
				Clear Chromate	207872-3	—
HD All-Plastic Plugs and Receptacles with Integral Standoffs	(B)	**.560** 14.22	4-40	Yellow Chromate	207719-1	207719-2
				Clear Chromate	207719-3	207719-4
			2-56*	Clear Chromate	747223-3	—
.090 Thick Panels †	(B)	**.312** 7.93	4-40	Yellow Chromate	748271-3	—

△Each part is individually bulk packed for multiple kit orders.

Notes: 1. All parts are packaged unassembled.
2. Each female screwlock kit is comprised of two assemblies as illustrated above.
3. One or two flat washers may be required for panel thicknesses less than .060 [1.52]. Female screwlocks are not recommended for panel thicknesses greater than .060 [1.52].
4. Female screwlocks with 2-56 thread size are to be used with cable clamps with mounting flanges. Female screwlocks with 4-40 and M3 (Metric) thread sizes can be used with all other cable clamps.
5. Female screwlocks mate with male screw retainers (page 1063).
6. Short female screwlocks cannot be used with the HDF connectors.
*2-56 is the male thread size. The female thread size is 4-40.
††206897-1 kit contains 2-screwlocks, 2-hex nuts and 2-retainers.

Individual Screwlocks
(Washers and Nuts not included)

Connector Used with	Style	Dimension C	Thread Size	Finish	Screwlocks	
					Individual	Bulk Packed△
HD All-Plastic Right-Angle Plugs and Receptacles	(A)	**.250** 6.35	4-40	Yellow Chromate	207953-2	—
				Clear Chromate	207953-3	—
HDP or HDF Metal-Shell or All-Plastic Plugs and Receptacles	(B)	**.312** 7.93	4-40	Yellow Chromate	205818-2	—
				Clear Chromate	205818-3	—
				Clear Chromate	748558-3△△	748558-4△△
			M2.6** (Metric)	Clear Chromate	749765-3	—
			4-40	Yellow Chromate	748270-2	—
			M3*** (Metric)	Clear Chromate	747404-3	—
	(Special)	**.185** 4.70	4-40	Clear Chromate	747877-3	—

△Each part is individually bulk packed for multiple kit orders.
△△With captivated star washer. No additional hardware included.
†Part Number 748270-2 Dimension .158 [4.01]
**M2.6 is the female thread size. The male thread size is 4-40.
***M3 is the female thread size. The male thread size is 4-40.
For complete product information, order Catalog 82068

Hardware

Slide Latches

Material and Finish:

4-40 Screws, Washers and Hex Nuts—Steel, zinc plated yellow chromate

2-56 Screws, Washers and Hex Nuts—Steel, zinc plated clear chromate

Slide Latch—Stainless steel

Related Product Data:

Connectors used with:

HDE Metal-Shell or All-Plastic—pages 1027, 1028

HDF Metal-Shell or All-Plastic—pages 1034-1038

HDP Metal-Shell—page 1040

HD Board Mount—pages 1069-1094

Technical Documents:

Instruction Sheet
408-6551

Style I

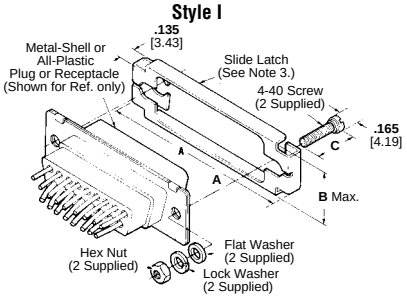

For Shell Sizes 1 and 4

Style II

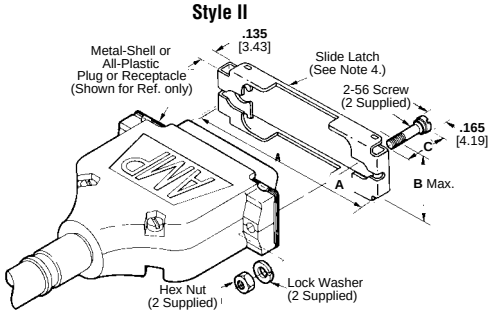

For Shell Sizes 2, 3 and 5

Style III

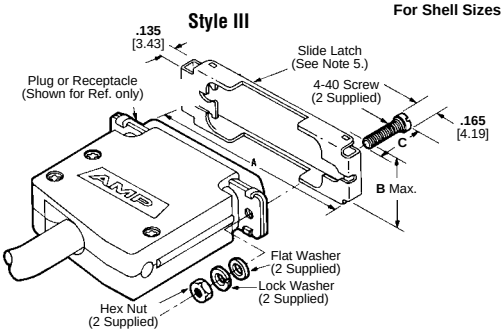

For Shell Sizes 2, 3 and 5

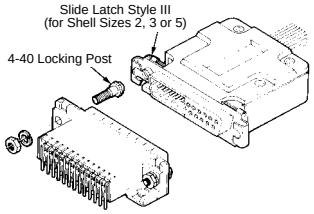

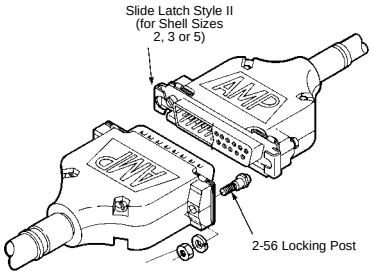

Typical Applications of Locking Posts and Slide Latches

Shell Size	Style	Dimensions			Slide Latch Kit Numbers	
		A	B	C	Individual	Bulk Packed*
1	I	**1.397** 35.48	**.490** 12.45	**.415** 10.54	745404-1	—
2	II	**1.725** 43.82	**.470** 11.94	**.547** 13.89	745583-1	745583-2
	III	**1.725** 43.82	**.470** 11.94	**.415** 10.54	745583-5	745583-6
3	II	**2.265** 57.53	**.470** 11.94	**.547** 13.89	745584-1	—
	III	**2.265** 57.53	**.470** 11.94	**.415** 10.54	745584-3	—
4	I	**2.913** 73.99	**.490** 12.45	**.415** 10.54	745407-1	—
5	II	**2.819** 71.60	**.575** 14.61	**.547** 13.89	745578-1	—
	III	**2.819** 71.60	**.575** 14.61	**.415** 10.54	745578-3	—

*Each part is individually bulk packed for multiple kit orders.

Notes:
1. All parts are packaged unassembled.
2. Each kit is comprised of a slide latch and two screws, flat washers (if required), lock washers and hex nuts. Style I slide latches are also furnished as part of cable clamp kits.
3. Style I slide latches can be used with cable clamps that do not extend beyond the front flange of the connector or on connectors without cable clamps.
4. Style II slide latches can be used with any cable clamp that has the mounting ear configuration as shown above.
5. Style III slide latches can be used on connectors without cable clamps or with cable clamps that do not have the mounting ear configuration shown with Style II above.
6. Slide latches mate with locking posts (page 1061).

For complete product information, order Catalog 82068

Products for Industrial & Commercial Applications
Dimensions are shown for reference purposes only.
Dimensions are in inches and millimeters unless otherwise specified. Values in brackets are metric equivalents.
Specifications subject to change.
Technical Support Center
1-800-522-6752
www.tycoelectronics.com

Hardware

Slide Latch Clip Assembly for Unfiltered Mating Half

Material and Finish:

Screw, Washers and Hex Nut—Cold rolled steel, zinc plated per ASTM B 633

Clip—Stainless steel

Kit Part Numbers:

Thread Size	Screw Length L	Pkg.	Part Numbers
4-40	**.415** 10.54	Unit†	206942-1
2-56	**.547** 13.89	Unit	748078-1

†Two assemblies per package.

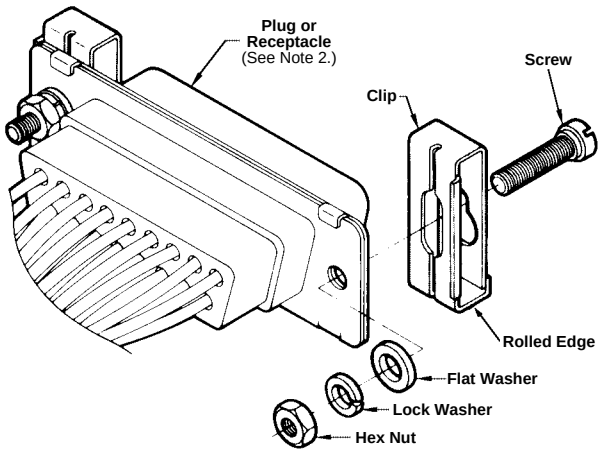

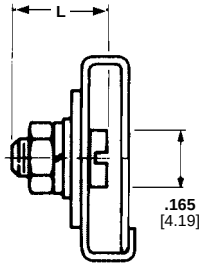

Notes:
1. All parts are packaged unassembled.
2. Slide Latch Clip Assemblies can be used on any Subminiature D AMPLIMITE HD-20 metal-shell plug or receptacle.
3. Slide Latch Clip Assemblies mate with Locking Post Assemblies shown below.

Technical Documents:

Instruction Sheet
408-7785

Locking Post Assembly

Material and Finish:

All Parts—Cold rolled steel, zinc plated clear or yellow chromate

Related Product Data:

Connectors used with:

HDE Metal-Shell or All-Plastic—pages 1027-1028

HDF Metal-Shell or All-Plastic—pages 1034-1038

HDP Metal-Shell—page 1040

HD Board Mount—pages 1069-1094

Technical Documents:

Instruction Sheets
408-6551
408-7785

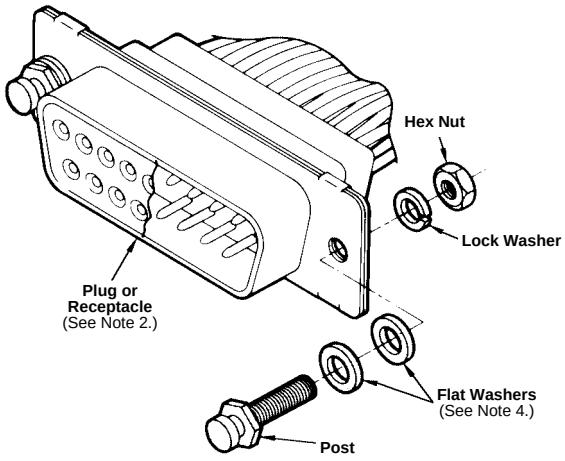

Thread Size	Locking Post Finish	Dimensions A	Dimensions B	Locking Post Kit Number (See Note 4) Individual	Locking Post Kit Number (See Note 4) Bulk Packed
4-40	Yellow Chromate	**.410** 10.41	**.110** 2.79	206514-1	206514-3
		.560 14.22	**.110** 2.79	206514-6	206514-7
2-56	Yellow Chromate	**.615** 15.62	**.172** 4.37	747242-1	—
	Clear Chromate	**.615** 15.62	**.172** 4.37	747242-3	—

*Each part is individually bulk packed for multiple kit orders.

Notes: 1. All parts are packaged unassembled.
2. Each kit is comprised of two complete assemblies, as illustrated above.
3. For front panel mounting, it is recommended that a shim be used between the connector flange and panel to prevent bowing of the flange.
4. Locking posts with 2-56 thread size are to be used with cable clamps with mounting flanges. Locking posts with 4-40 thread size can be used with all other cable clamps
5. Locking posts mate with slide latches (page 1060).

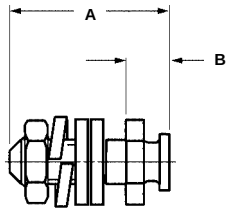

Part Number 206514-1

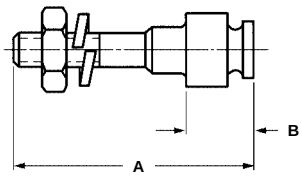

Part Number 747242-1

For complete product information, order Catalog 82068

Hardware

Spring Latches for Cable Clamps with Mounting Ears (Two-Piece)

Material:

.015 [0.38] Stainless steel

Related Product Data:

Connectors used with:

HDE Metal-Shell—page 1028

HDP Metal-Shell (Tin plated only)—page 1040

Technical Documents:

Instruction Sheet
408-9130

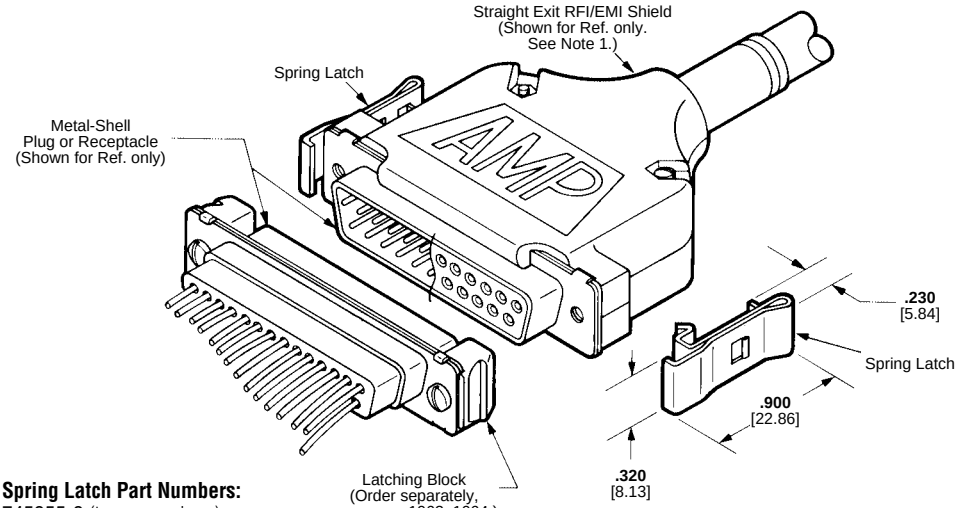

Spring Latch Part Numbers:
745255-2 (two per package)
745255-3 (bulk packed)*

*Two-piece spring latches are individually bulk packed for multiple part orders.

Notes: 1. Two-piece spring latches can be used with RFI/EMI shields (page 1054).
2. Two-piece spring latches mate with latching blocks (pages 1063, 1064).

Spring Latches (Two-Piece)

Material:

Stainless steel

Related Product Data:

Connectors used with:

HDE Metal-Shell—page 1028

HDP Metal-Shell—pages 1040

Technical Documents:

Instruction Sheet
408-9131

Typical Application of Two-Piece Spring Latches with Straight Exit RFI/EMI Shield

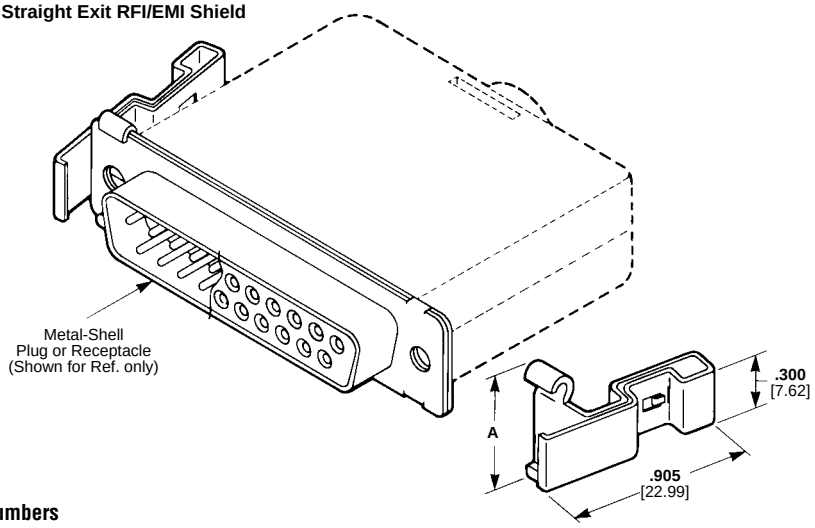

Spring Latch Part Numbers

Size	Dimension A	Part Numbers	
		Two Per Package	Bulk Packed*
1-4	**.540** 13.72	745779-2	745779-3
5	**.650** 16.51	745779-5	—

*Two-piece spring latches are individually bulk packed for multiple part orders.

Notes: 1. These dimensions must be maintained to assure satisfactory operation of the spring latches.
2. Two-piece spring latches mate with latching blocks (pages 1063, 1064).

Typical Application of Two-Piece Spring Latches with Post Molded Strain Relief

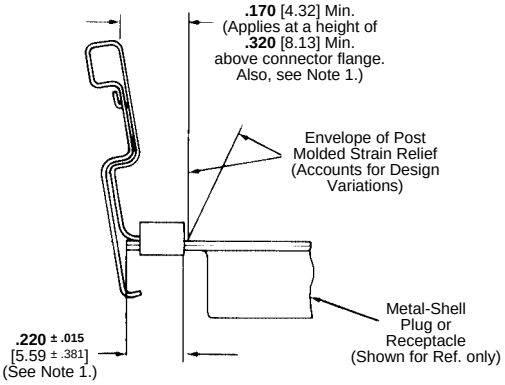

For complete product information, order Catalog 82068

Products for Industrial & Commercial Applications
Dimensions are shown for reference purposes only.
Dimensions are in inches and millimeters unless otherwise specified. Values in brackets are metric equivalents.
Specifications subject to change.
Technical Support Center
1-800-522-6752
www.tycoelectronics.com

Hardware

Latching Blocks with Threaded Hole

Material and Finish:

Latching Blocks—Zinc
Pan Head Screws—Steel, zinc plated

Related Product Data:

Connectors used with:
HDE Metal-Shell or All-Plastic—pages 1027, 1028
HDF Metal-Shell or All-Plastic—pages 1034-1038
HDP Metal-Shell—page 1040
HD Board Mount—pages 1069-1094

Technical Documents:

Instruction Sheet
408-9128

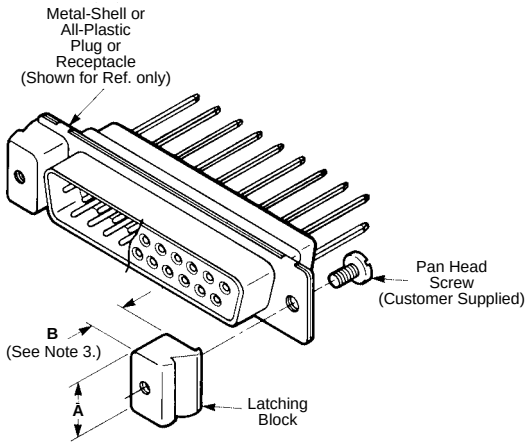

Shell (No. of Contact Positions)	Dimensions A	Dimensions B	Thread Size	Rear-Panel Latching Block Part Numbers Individual	Rear-Panel Latching Block Part Numbers Bulk Packed*	Front-Panel Latching Block Part Numbers Individual	Front-Panel Latching Block Part Numbers Bulk Packed*
1 thru 4 (9 thru 37)	**.400** 10.16	**.190** 4.83	M3 (Metric)	745403-1	745403-2	—	—
			4-40	745403-8	745403-9	—	—
	.400 10.16	**.220** 5.59	4-40	747717-2	747717-3	—	—
	.400 10.16	**.250** 6.35	M3 (Metric)	—	—	208101-1	208101-2
			4-40	—	—	208101-8	208101-9
5 (50)	**.530** 13.46	**.250** 6.35	4-40	—	—	1-208101-1	—

*Bulk packed for multiple part orders.
**Individual kits contain two latching blocks per package.

Notes: 1. All parts are packaged unassembled.
2. Each front panel latching block kit is comprised of two latching blocks. Two pan head screws of the appropriate length and thread size to be supplied by customer.
3. B dimension .250 [6.35] is for connector flange mounting, .220 [5.59] is for use with .030 [0.76] thick panels, and .190 [4.83] is for use with .060 [1.52] thick panels.
4. Latching blocks mate with spring latches (page 1062).

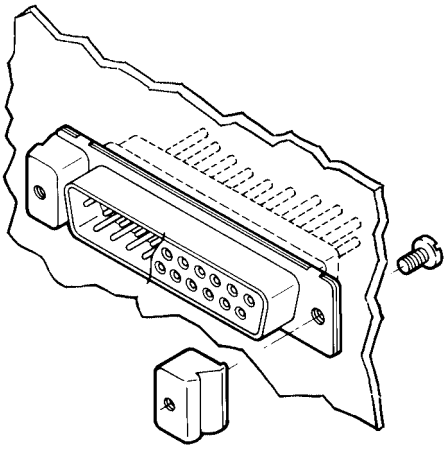

Typical Application of Front-Panel Mounted Subminiature D Connector using Front-Panel Latching Blocks

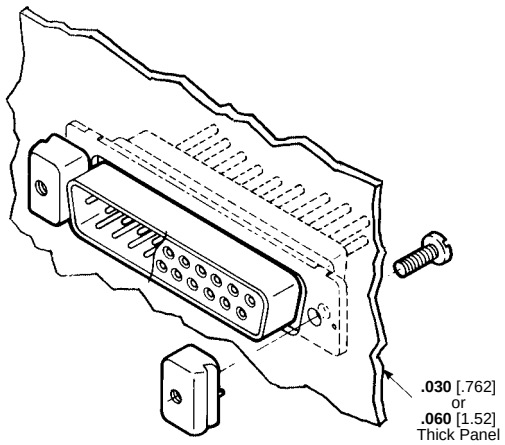

Typical Application of Rear-Panel Mounted Subminiature D Connector using Rear-Panel Latching Blocks

For complete product information, order Catalog 82068

Products for Industrial & Commercial Applications
Dimensions are shown for reference purposes only.
Dimensions are in inches and millimeters unless otherwise specified. Values in brackets are metric equivalents.
Specifications subject to change.
Technical Support Center
1-800-522-6752
www.tycoelectronics.com

Hardware

Latching Blocks with Slot Recess and Thru Hole

Material:

Latching Blocks—Zinc

Related Product Data:

Connectors used with:

HDE Metal-Shell or All-Plastic—pages 1027, 1028

HDF Metal-Shell or All-Plastic—pages 1034-1038

HDP Metal-Shell—page 1040

HD Board Mount—pages 1069-1094

Technical Documents:

Instruction Sheet
408-9128

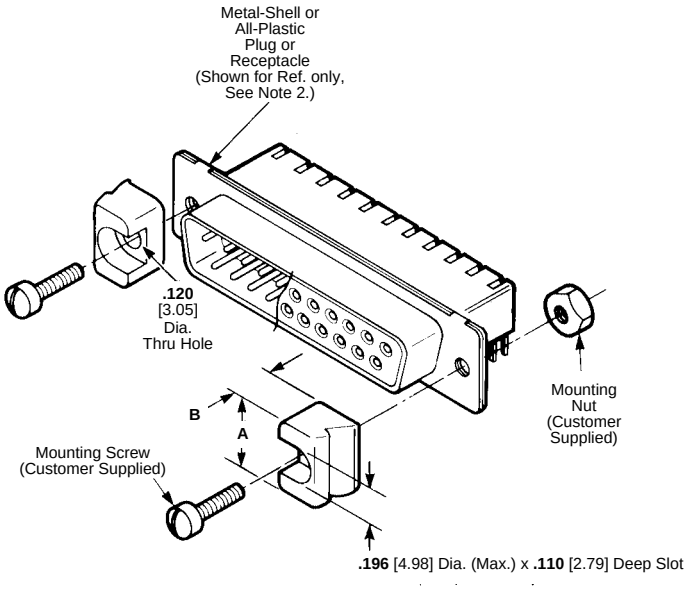

Shell (No. of Contact Positions)	Dimensions A	Dimensions B	Panel Thickness	Rear-Panel Latching Block Part Numbers Individual	Rear-Panel Latching Block Part Numbers Bulk Packed*	Front-Panel Latching Block Part Numbers Individual	Front-Panel Latching Block Part Numbers Bulk Packed*
1 thru 4 (9 thru 37)	.400 10.16	.160 4.06	.090 2.29	747080-2	—	—	—
		.190 4.83	.060 1.52	745245-2	745245-3	—	—
		.250 6.35	—	—	—	745286-2	745286-3

*Bulk packed for multiple part orders.
**Individual kits contain two latching blocks per package.

Notes: 1. Mounting screws and nuts are to be supplied by Customer.
2. These latching blocks allow mounting screws to be installed thru the front of the block and to be screwed into the bracket of a right-angle connector, a fixed insert in a connector mounting flange, or a nut behind the connector mounting flange (as illustrated above).
3. Latching blocks mate with spring latches (page 1062).

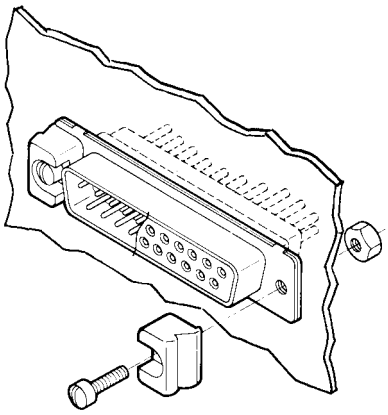

Typical Application of Front-Panel Mounted Subminiature D Connector using Front-Panel Latching Blocks

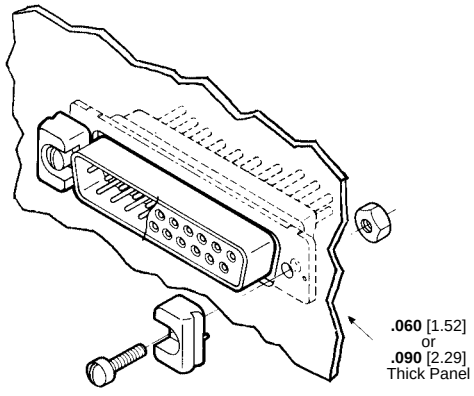

Typical Application of Rear-Panel Mounted Subminiature D Connector using Rear-Panel Latching Blocks

For complete product information, order Catalog 82068

Products for Industrial & Commercial Applications
Dimensions are shown for reference purposes only.
Dimensions are in inches and millimeters unless otherwise specified. Values in brackets are metric equivalents.
Specifications subject to change.
Technical Support Center
1-800-522-6752
www.tycoelectronics.com

Hardware

Standoff Bushings

Material:
Aluminum

Related Product Data:
Connectors used with:
HD Straight Posted—
pages 1085-1094

Technical Documents:
Product Specification
108-40032

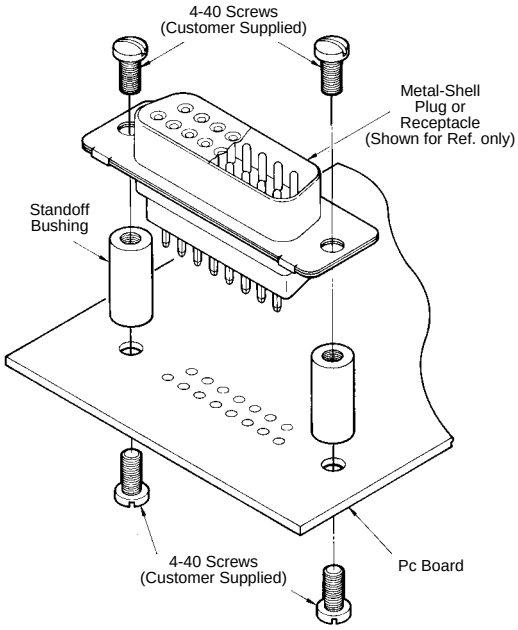

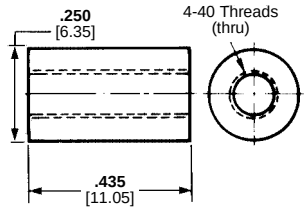

Kit Numbers:
205933-3 (two bushings per package)
205933-4 (bulk packed)*
*Parts are individually bulk packed for multiple part orders.

Keying Plug
(for Size 20 Socket Contacts)

Material:
Polyphenylene oxide

Related Product Data:
Connectors used with:
All HDE, HDP and HD Receptacles with Socket Contacts

Technical Documents:
Product Specification
108-40032

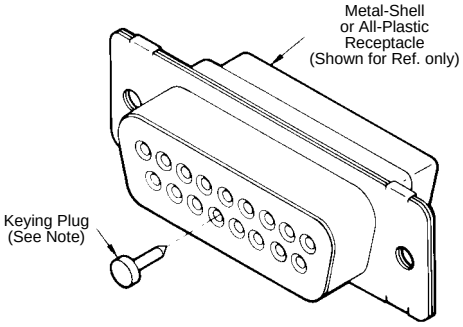

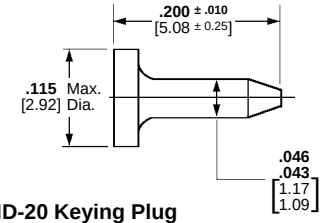

HD-20 Keying Plug
Part Number 206509-1

Notes: 1 Keying plug is installed taper-end first into front of receptacle.
2 Sold individually.

EMI/RFI Gaskets

Material and Finish:
Brass, .006[0.15] thick;
bright tin plated

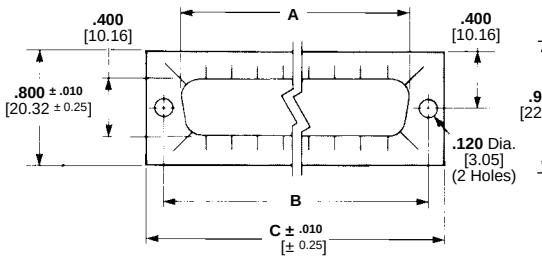

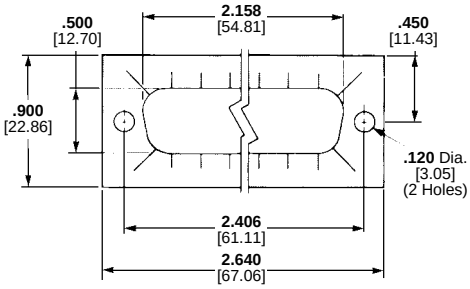

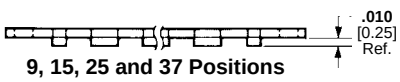

9, 15, 25 and 37 Positions



50 Positions

Shell Size (No. of Contact Positions)	Dimensions A	Dimensions B	Dimensions C	Gasket Part Numbers
1 (9)	**.746** 18.95	**.984** 24.99	**1.220** 30.99	747024-3
2 (15)	**1.074** 27.28	**1.312** 33.32	**1.555** 39.50	747025-3
3 (25)	**1.614** 41.00	**1.852** 47.04	**2.100** 53.34	745776-3
4 (37)	**2.266** 57.56	**2.500** 63.50	**2.730** 69.34	745777-3
5 (50)	**2.158** 54.81	**2.406** 61.11	**2.640** 67.06	747412-3

For complete product information, order Catalog 82068

Products for Industrial & Commercial Applications
Dimensions are shown for reference purposes only.
Dimensions are in inches and millimeters unless otherwise specified. Values in brackets are metric equivalents.
Specifications subject to change.
Technical Support Center
1-800-522-6752
www.tycoelectronics.com

Right-Angle Posted PCB Connectors

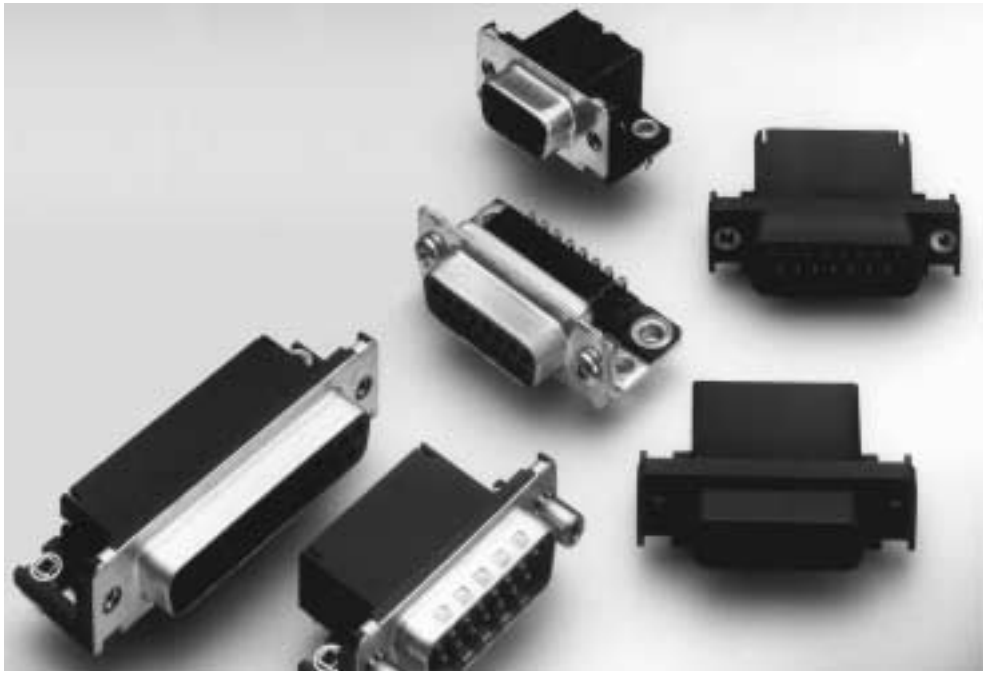

Product Facts:

- Flame retardant thermoplastic housing material, UL 94V-0 rated
- HD-20 right-angle connectors are available in 9, 15, 25 and 37 positions (Shell Sizes 1 thru 4) in both plug and receptacle versions; some versions available in 50 position, (Shell Size 5)
- HD-22 right angle receptacle connectors are available in 15, 26, 44, 62 and 78 positions (Shell Sizes 1 thru 5)
- Low cost front metal-shell design compatible with full metal-shell connectors
- Integral boardlock versions secure posted connectors to pc boards prior to soldering
- HD-20 and HD-22 connector contacts are available in plating types to satisfy different applications
- HD-22 right-angle posted connectors are designed for robotic and high temperature applications
- Integral fixed 4-40 threaded inserts and screwlocks are available in both HD-20 and HD-22 connectors
- Connectors are intermateable with any size 20 or 22 subminiature D connectors dimensionally complying with MIL-C-24308
- Recognized under the Component Program of Underwriters Laboratories Inc., File No. E28476
- Certified by Canadian Standards Association, File No. LR 164196

For complete product information, order Catalog 82068

HD-22 Front Metal-Shell Right-Angle Posted PCB Connectors 350 Mount

Plug





With Boardlock and Threaded Insert



With Boardlock and Female Screwlock

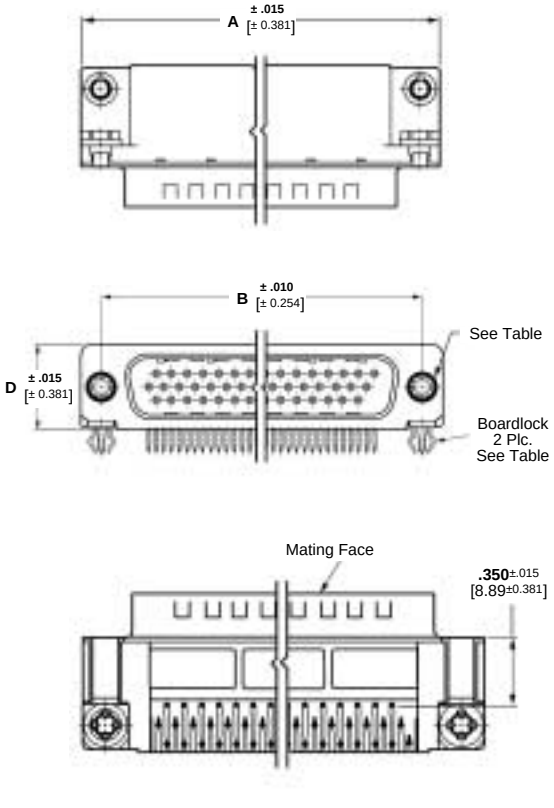

Material and Finish:

Front Shell—Steel, tin plated
Housing—94V-0 rated thermoplastic, black
Eyelets—Brass, tin or tin-lead plated
Threaded Inserts—Zinc
Female Screwlocks—Zinc
Pin Contacts (Posted)—Copper alloy
Contact Finish—Duplex plated:
A—.000030 [0.00076] gold on mating end, tin-lead on termination end, with entire contact nickel underplated
B—Gold flash on mating end, tin-lead on termination end, with the entire contact nickel underplated

Related Product Data:

Mateable Connectors:
HDP-22—pages 1020-1023

Technical Documents:

Product Specification
108-1092
Application Specification
114-40021

Shell Size	No. of Contact Positions	Dimensions				Contacts Finish (Plating Code)	Part Numbers	
		A	B	C	D		Boardlocks	
							Threaded Inserts	Female Screwlocks
1	15	**1.222** 31.04	**.984** 24.99	**.836** 21.23	**.494** 12.55	A	749767-1	749768-1
2	26	**1.550** 39.37	**1.312** 33.33	**.836** 21.23	**.494** 12.55	A	749769-1	—
3	44	**2.090** 53.09	**1.852** 47.04	**.836** 21.23	**.494** 12.55	A	749771-1	—
4	62	**2.738** 69.55	**2.500** 63.50	**.836** 21.23	**.494** 12.55	A	749639-1	—

Notes: 1. All plug connectors are preloaded with size 22 DF posted pin contacts
2. Recommended pc board thickness is .062 [1.58] for connectors with boardlocks and .093 [2.36] max. for all others.

For complete product information, order Catalog 82068

HD-22 Front Metal-Shell Right-Angle Posted PCB Connectors 350 Mount

Receptacle





With Boardlock and Threaded Insert



With Female Screwlock

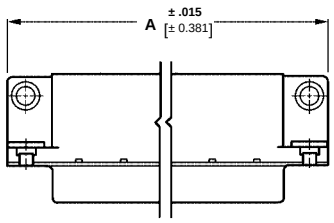

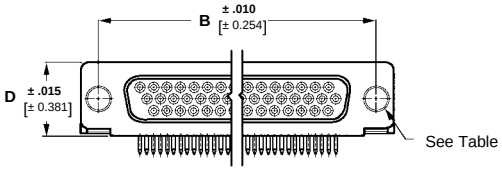

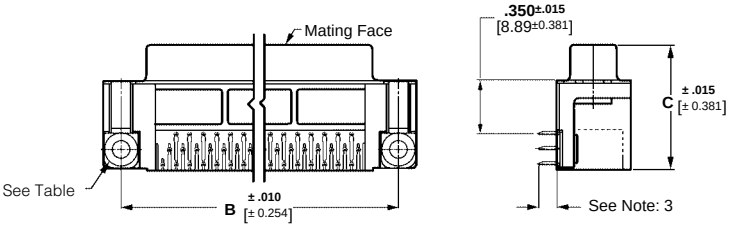

Material and Finish:

Front Shell—Steel, tin plated
Housing—94V-0 rated thermoplastic, black
Eyelets—Brass, tin or tin-lead plated
Threaded Inserts—Zinc
Female Screwlocks—Zinc
Socket Contacts (Posted)—Phosphor bronze
Contact Finish—Duplex plated:
A—.000030 [0.00076] gold on mating end, tin-lead on termination end, with entire contact nickel underplated
B—Gold flash on mating end, tin-lead on termination end, with the entire contact nickel underplated

Related Product Data:

Mateable Connectors:
HDP-22—pages 1020-1023

Technical Documents:

Product Specification
108-1092
Application Specification
114-40021

Shell Size	No. of Contact Positions	Dimensions A	B	C	D	Contacts Finish (Plating Code)	Part Numbers: Boardlocks: Threaded Inserts	Boardlocks: Female Screwlocks	.125 [3.18] Dia. Holes: Threaded Inserts
1	15	**1.222** 31.04	**.984** 24.99	**.836** 21.23	**.494** 12.55	A	748390-5	748390-6	—
						B	1-748390-1	1-748390-2	—
						A	3-748390-8	4-748390-2	—
						B	4-748390-1	—	—
2	26	**1.550** 39.37	**1.312** 33.33	**.836** 21.23	**.494** 12.55	A	748481-5	748481-6	1-748481-9
3	44	**2.090** 53.09	**1.852** 47.04	**.836** 21.23	**.494** 12.55	A	748482-5	—	—
4	62	**2.738** 69.55	**2.500** 63.50	**.836** 21.23	**.494** 12.55	A	748394-5	748394-6	—
5	78	**2.644** 67.16	**2.406** 61.11	**.936** 23.77	**.605** 15.37	A	748483-5	748483-6	—

Notes: 1. All receptacle connectors are preloaded with size 22 DF posted socket contacts
2. Recommended pc board thickness is .062 [1.58] for connectors with boardlocks and .093 [2.36] max. for all others.
3. Tail Length .125±.020 [3.18±0.51] except Part Nos. 3-748390-8, 4-748390-1 and 4-748390-2 tail length .085±.010 [2.16±2.54]

For complete product information, order Catalog 82068

Products for Industrial & Commercial Applications
Dimensions are shown for reference purposes only.
Dimensions are in inches and millimeters unless otherwise specified. Values in brackets are metric equivalents.
Specifications subject to change.
Technical Support Center
1-800-522-6752
www.tycoelectronics.com

HD-20 Front Metal-Shell Right-Angle Posted PCB Connectors 318 Mount

Plug

Post Size—.026 [0.66] Dia.



With Grounding Indents and Grounding Straps



With Threaded Insert



With Fixed Female Screwlock

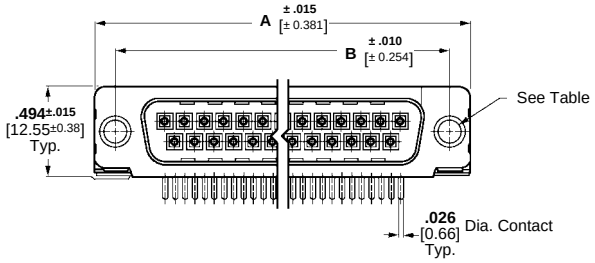

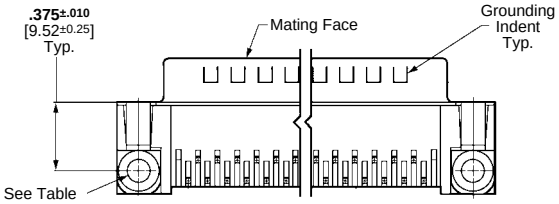

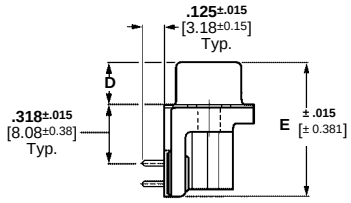

Material and Finish:

Front Shell—Steel, tin plated

Housing—94V-0 rated thermoplastic, black

Eyelets—Brass, tin plated

Threaded Inserts—Zinc

Female Screwlock—Zinc

Boardlocks—Copper alloy, tin-lead plated

Pin Contacts (Posted)—Brass, duplex plated as follows:

A—.000030 [0.00076] gold on mating end, tin-lead on termination end, with entire contact nickel underplated

B—Gold flash on mating end, tin-lead on termination end, with entire contact nickel underplated

Related Product Data:

Mateable Connectors:

HDE—pages 1027-1032

HDF—pages 1034-1038

HDP—page 1042

Technical Documents:

Product Specification
108-40025

Application Specification
114-40010

Shell Size	No. of Contact Positions	Dimensions A	Dimensions B	Dimensions D	Dimensions E	Contact Finish (Plating Code)	Part Numbers: Without Boardlocks: With Standard Mounting Holes	Without Boardlocks: With Threaded Inserts	Without Boardlocks: With Fixed Female Screwlocks	With Boardlocks: With Standard Mounting Holes	With Boardlocks: With Threaded Inserts	With Boardlocks: With Fixed Female Screwlocks
1	9	**1.213** 30.81	**.984** 24.99	**.235** 5.97	**.733** 18.62	A	747250-2	747250-4	747250-6	747840-2	747840-4 788792-1*	747840-6 788793-1*
						B	—	747250-3	—	—	747840-3 788792-2*	747840-5 788793-2*
2	15	**1.541** 39.14	**1.312** 33.33	**.235** 5.97	**.733** 18.62	A	747236-2	747236-4	747236-6	747841-2	747841-4	747841-6
						B	—	747236-3	—	—	747841-3	—
3	25	**2.088** 53.04	**1.852** 47.04	**.230** 5.84	**.738** 18.75	A	747238-2	747238-4	747238-6	747842-2	747842-4 788794-1*	747842-6 788795-1*
						B	747238-1	747238-3	—	—	747842-3 788794-2*	747842-5
4	37	**2.729** 69.32	**2.500** 63.50	**.230** 5.84	**.740** 18.80	A	747252-2	747252-4	—	747843-2	747843-4	747843-6
						B	—	—	—	—	747843-3	—

Notes: 1. All plug connectors are preloaded with size 20 DF posted pin contacts.
2. Recommended pc board thickness is .062 [1.58] for connectors with boardlocks and .093 [2.36] max. for all others.
3. Male screw retainers (page 1058) are used as mating hardware for connectors with 4-40 female screwlocks.

*SMT Process Compatible Version—Housings are 94V-0 rated, compatible with standard wave, vapor phase, infrared reflow, and convection ovens used in surface mount processing (SMT).

For complete product information, order Catalog 82068

Products for Industrial & Commercial Applications
Dimensions are shown for reference purposes only.
Dimensions are in inches and millimeters unless otherwise specified. Values in brackets are metric equivalents.
Specifications subject to change.
Technical Support Center
1-800-522-6752
www.tycoelectronics.com

HD-20 Front Metal-Shell Right-Angle Posted PCB Connectors 318 Mount

Receptacle
Post Size—.026 [0.66] Dia.



With Grounding Straps



With Threaded Insert



With Fixed Female Screwlock

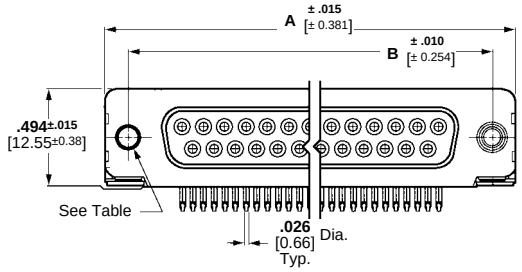

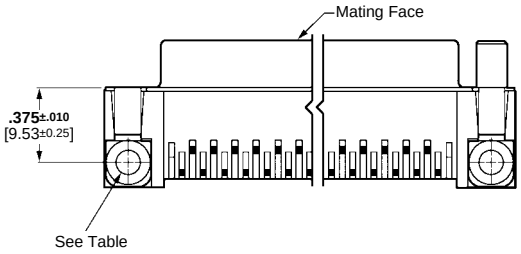

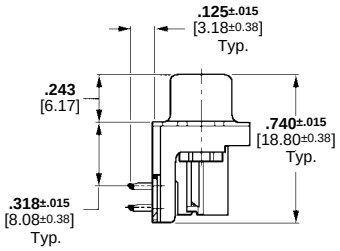

Material and Finish:

Front Shell—Steel, tin plated
Housing—94V-0 rated thermoplastic, black
Eyelets—Brass, tin plated
Threaded Inserts—Zinc
Female Screwlock—Zinc

Boardlocks—Copper alloy, tin-lead plated
Socket Contacts (Posted)—Phosphor bronze, duplex plated as follows:
A—.000030 [0.00076] gold on mating end, tin-lead on termination end, with entire contact nickel underplated
B—Gold flash on mating end, tin-lead on termination end, with entire contact nickel underplated

Related Product Data:

Mateable Connectors:
HDE—pages 1027-1032
HDF—pages 1034-1038
HDP—page 1042

Technical Documents:

Product Specification
108-40025
Application Specification
114-40010

Shell Size	No. of Contact Positions	Dimensions A	Dimensions B	Contact Finish (Plating Code)	Part Numbers: Without Boardlocks: With Standard Mounting Holes	Without Boardlocks: With Threaded Inserts	Without Boardlocks: With Fixed Female Screwlocks	With Boardlocks: With Standard Mounting Holes	With Boardlocks: With Threaded Inserts	With Boardlocks: With Fixed Female Screwlocks
1	9	**1.213** 30.81	**.984** 24.99	A	745781-2	745781-4	745781-6 788803-1	747844-2	747844-4 788796-1*	747844-6 788797-1*
				B	—	745781-3	—	—	747844-3 788796-2*	747844-5 788797-2*
2	15	**1.541** 39.14	**1.312** 33.33	A	745782-2	745782-4	745782-6	747845-2	747845-4 788798-1*	747845-6 788799-1*
				B	—	—	—	—	747845-3 788798-2*	747845-5
3	25	**2.088** 53.04	**1.852** 47.04	A	745783-2	745783-4	745783-6	747846-2	747846-4 788800-1*	747846-6 788801-1*
				B	—	745783-3	745783-5	—	747846-3 788800-2*	747846-5 788801-2*
4	37	**2.729** 69.32	**2.500** 63.50	A	—	745784-4	745784-6	—	747847-4 788802-1*	747847-6

Notes: 1. All plug connectors are preloaded with size 20 DF posted pin contacts.
2. Recommended pc board thickness is .062 [1.58] for connectors with boardlocks and .093 [2.36] max. for all others.
3. Male screw retainers (page 1058) are used as mating hardware for connectors with 4-40 female screwlocks.

*SMT Process Compatible Version—Housings are 94V-0 rated, compatible with standard wave, vapor phase, infrared reflow, and convection ovens used in surface mount processing (SMT).

For complete product information, order Catalog 82068

Products for Industrial & Commercial Applications
Dimensions are shown for reference purposes only.
Dimensions are in inches and millimeters unless otherwise specified. Values in brackets are metric equivalents.
Specifications subject to change.
Technical Support Center
1-800-522-6752
www.tycoelectronics.com

HD-20 Front Metal-Shell Right-Angle Posted PCB Connectors 318 Mount

Plug— With Boardlocks





With Threaded Insert

Material and Finish:

Housing—94V-0 rated thermoplastic, black

Eyelets—Brass, tin plated

Threaded Inserts—Zinc

Boardlock—Copper alloy, tin-lead plated

Pin Contacts (Posted)—Copper alloy, duplex plated as follows:

A—.000030 [0.00076] gold on mating end, tin-lead on termination end, with entire contact nickel underplated

B—.000010 [0.00025] min. gold on mating end, tin-lead on termination end, with entire contact nickel underplated

Related Product Data:

Mateable Connectors:

HDE—pages 1027, 1028

HDF—pages 1034-1038

Technical Documents:

Product Specification
108-1226

Application Specification
114-40027

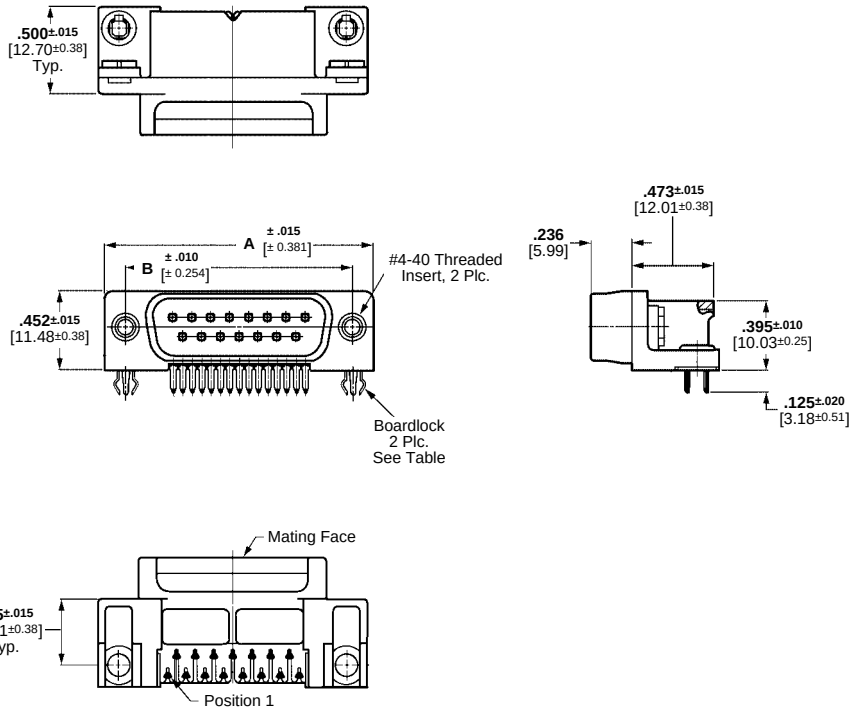

Shell Size	No. of Contact Positions	Dimensions A	Dimensions B	Contact Finish (Plating Code)	Part Numbers With Threaded Inserts: With Boardlocks	Part Numbers With Threaded Inserts: Without Boardlocks
2	15	**1.550** 39.37	**1.312** 33.32	A	748904-1	—
3	25	**2.090** 53.09	**1.852** 47.04	B	—	748865-3

Consult Tyco Electronics for availability.

Notes: 1. All plug connectors are preloaded with size 20 DF posted pin contacts.
2. Recommended pc board thickness is .062 [1.58].
3. Male screw retainers (page 1058) are used as mating hardware for connectors with 4-40 female screwlocks.

For complete product information, order Catalog 82068

Products for Industrial & Commercial Applications
Dimensions are shown for reference purposes only.
Dimensions are in inches and millimeters unless otherwise specified. Values in brackets are metric equivalents.
Specifications subject to change.
Technical Support Center
1-800-522-6752
www.tycoelectronics.com

HD-20 All Plastic Right-Angle Posted PCB Connectors 318 Mount

Receptacle— With Boardlocks



With Threaded Insert

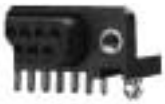

With Threaded Insert



With Fixed Female Screwlock

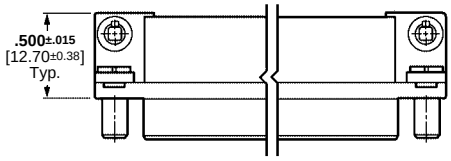

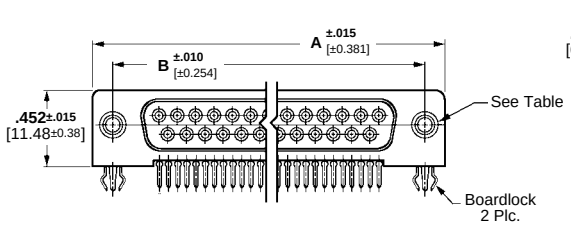

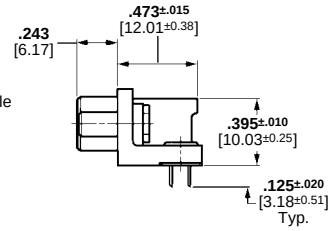

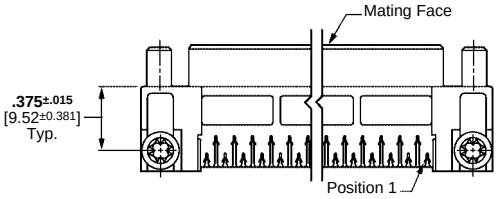

Material and Finish:

Housing—94V-0 rated thermoplastic, black

Eyelets—Brass, tin plated

Threaded Inserts—Zinc

Female Screwlock—Zinc

Boardlock—Copper alloy, tin-lead plated

Socket Contacts (Posted)—Phosphor bronze, duplex plated as follows:

A—.000030 [0.00076] gold on mating end, tin-lead on termination end, with entire contact nickel underplated

B—Gold flash on mating end, tin-lead on termination end, with entire contact nickel underplated

Related Product Data:

Mateable Connectors:

HDE—pages 1027, 1028

HDF—pages 1034-1038

Technical Documents:

Product Specification
108-1226

Application Specification
114-40027

Shell Size	No. of Contact Positions	Dimensions A	Dimensions B	Contact Finish (Plating Code)	Part Numbers With Threaded Inserts	Part Numbers With Fixed Female Screwlocks
1	9	**1.222** 31.04	**.984** 24.99	A	—	748979-1
				B	—	748979-2
3	25	**2.090** 53.09	**1.852** 47.04	A	748901-1	748981-1

Consult Tyco Electronics for availability.

Notes: 1. All receptacle connectors are preloaded with size 20 DF posted socket contacts.
2. Recommended pc board thickness is .062 [1.58].
3. Male screw retainers (page 1058) are used as mating hardware for connectors with 4-40 female screwlocks.

For complete product information, order Catalog 82068

Products for Industrial & Commercial Applications
Dimensions are shown for reference purposes only.
Dimensions are in inches and millimeters unless otherwise specified. Values in brackets are metric equivalents.
Specifications subject to change.
Technical Support Center 1-800-522-6752
www.tycoelectronics.com

HD-20 All-Plastic Right-Angle Posted PCB Connectors 318 Mount

Receptacle—Without Boardlocks

Post Size—.026 [0.66] Dia.



With Standard Mounting Holes

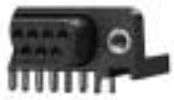

With Threaded Insert



With Fixed Female Screwlock

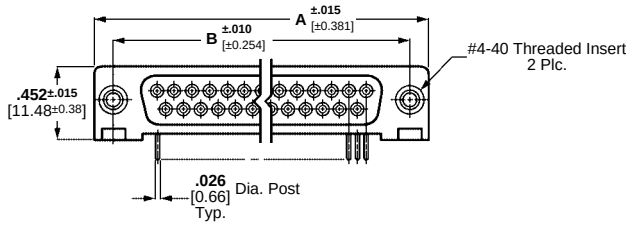

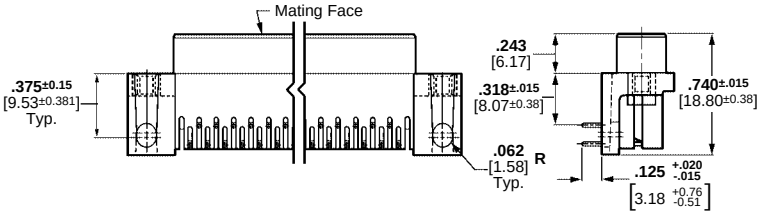

Material and Finish:

Housing—94V-0 rated thermoplastic, black

Threaded Inserts—Zinc, chromate coated

Female Screwlocks—Zinc, chromate coated

Socket Contacts (Posted)—Phosphor bronze, duplex plated as follows:

A—.000030 [0.00076] gold on mating end, tin-lead on termination end, with entire contact nickel underplated

B—Gold flash on mating end, tin-lead on termination end, with entire contact nickel underplated

Related Product Data:

Mateable Connectors:

HDE—pages 1027, 1028

HDF—pages 1034-1038

Technical Documents:

Product Specification
108-40025

Application Specification
114-40015

Shell Size	No. of Contact Positions	Dimensions A	Dimensions B	Contact Finish (Plating Code)	Part Numbers: With Threaded Inserts	Part Numbers: With Fixed Female Screwlocks	Part Numbers: With Standard Mounting Holes
1	9	**1.213** 30.81	**.984** 24.99	A	745394-2	745395-2	—
				B	—	—	745131-1
2	15	**1.541** 39.14	**1.312** 33.32	A	745393-2	745396-2	745271-2
3	25	**2.088** 53.04	**1.852** 47.04	A	745392-2	745397-2	745132-2

Notes: 1. All receptacle connectors are preloaded with size 20 DF posted socket contacts.
2. Recommended pc board thickness is .093 [2.36].
3. Male screw retainers (page 1058) are used as mating hardware for connectors with 4-40 female screwlocks.

For complete product information, order Catalog 82068

Products for Industrial & Commercial Applications
Dimensions are shown for reference purposes only.
Dimensions are in inches and millimeters unless otherwise specified. Values in brackets are metric equivalents.
Specifications subject to change.
Technical Support Center 1-800-522-6752 www.tycoelectronics.com

HD-20 Full Metal-Shell Right-Angle Posted PCB Connectors 454 Mount

Plug



Plug Without Grounding Indents



Plug With Grounding Indents

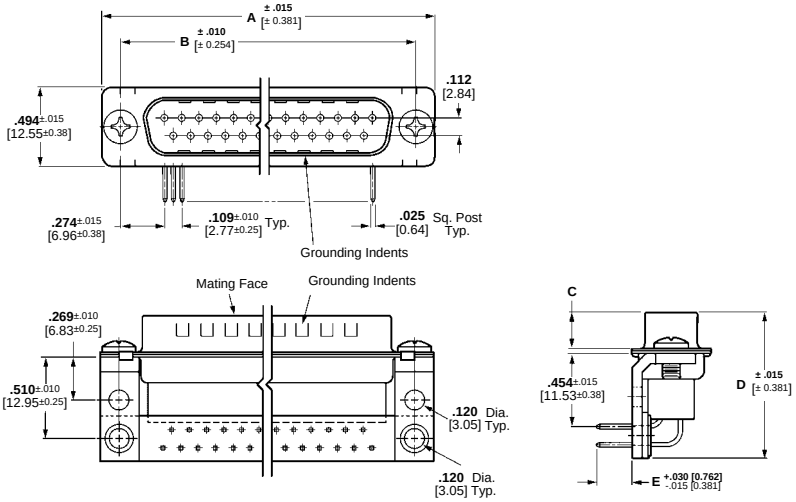

Receptacle



Receptacle

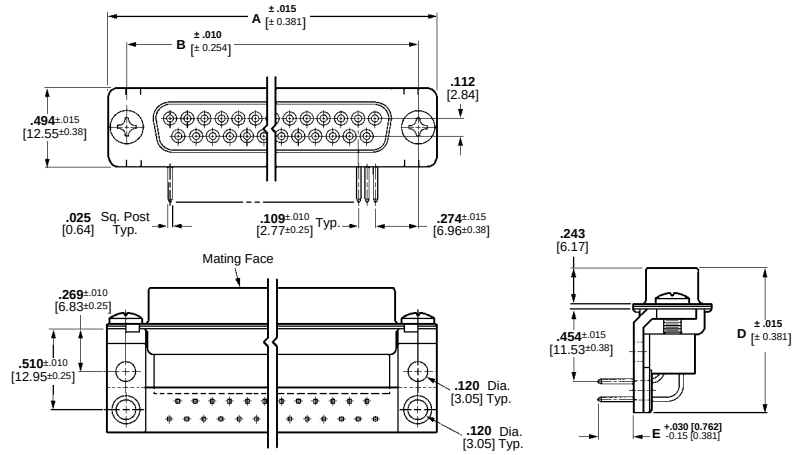

Post Size—.025 [0.64] Sq.

Material and Finish:

Shell—Steel, tin plated

Insert—94V-0 rated thermoplastic, black

Contacts (Posted):
Pin—Brass
Socket—Phosphor bronze

Contact Plating:

A—.000030 [0.00076] gold on mating end, tin-lead on termination end, with entire contact nickel underplated

B—Gold flash on mating end, tin-lead on termination end, with entire contact nickel underplated

Related Product Data:

Mateable Connectors:

HDE—pages 1027, 1028
HDF—pages 1034-1038
HDP—page 1040

Technical Documents:

Product Specification
108-40025

Application Specification
114-40013

Shell Size	No. of Contact Positions	Dimensions A	B	C*	D	E	Contact Finish (Plating Code)	Part Numbers: Plug With Grounding Indents	Part Numbers: Receptacle
1	9	**1.213** 30.81	**.984** 24.99	**.235** 5.97	**.915** 23.24	**.125** 3.18	A	745434-8	745438-4
							B	—	745438-3
						.220 5.59	A	—	745438-2
							B	—	745438-1
2	15	**1.541** 39.14	**1.312** 33.33	**.235** 5.97	**.915** 23.24	**.125** 3.18	A	745435-8	745439-4
						.220 5.59	A	—	745439-2
3	25	**2.088** 53.04	**1.852** 47.04	**.230** 5.84	**.919** 23.34	**.125** 3.18	A	745436-8	745440-4
							B	—	—
						.220 5.59	A	—	745440-2
							B	745436-3	745440-1
4	37	**2.729** 69.32	**2.500** 63.50	**.230** 5.84	**.919** 23.34	**.125** 3.18	A	745437-8	745441-4
						.220 5.59	B	745437-3	—

*Plug only

Notes: 1. All connectors are preloaded with size 20 DF posted contacts; plugs with pin contacts and receptacles with socket contacts.
2. .125 [3.18] post length is recommended for pc board thickness of .093 [2.36] max.; .220 [5.59] post length is recommended for pc board thickness of .125 [3.18] max.

For complete product information, order Catalog 82068

Products for Industrial & Commercial Applications
Dimensions are shown for reference purposes only.
Dimensions are in inches and millimeters unless otherwise specified. Values in brackets are metric equivalents.
Specifications subject to change.
Technical Support Center
1-800-522-6752
www.tycoelectronics.com

HD-20 Front Metal-Shell Right-Angle Posted PCB Connectors 478 Mount

Plug

Post Size—.026 [0.66] Dia.



With Grounding Indents and Grounding Straps



With Threaded Insert



With Fixed Female Screwlock

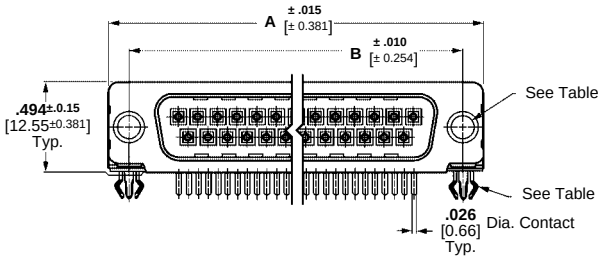

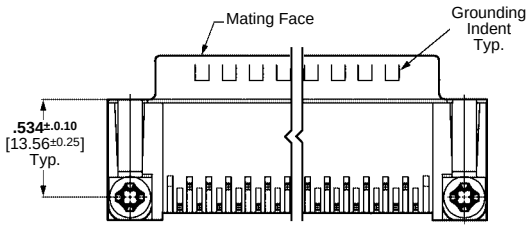

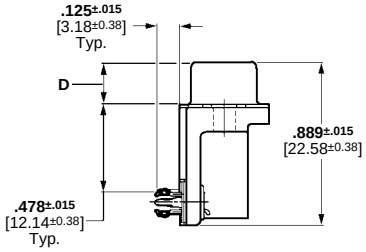

Material and Finish:

Front Shell—Steel, tin plated

Housing—94V-0 rated thermoplastic, black

Eyelets—Brass, tin plated

Threaded Inserts—Zinc

Female Screwlock—Zinc

Boardlocks—Copper alloy, tin-lead plated

Pin Contacts (Posted)—Brass, duplex plated as follows:

A—.000030 [0.00076] gold on mating end, tin-lead on termination end, with entire contact nickel underplated

B—Gold flash on mating end, tin-lead on termination end, with entire contact nickel underplated

Related Product Data:

Mateable Connectors:

HDE—pages 1027-1032

HDF—pages 1034-1038

HDP—page 1040-1042

Technical Documents:

Product Specification
108-40025

Application Specification
114-40010

Shell Size	No. of Contact Positions	Dimensions A	Dimensions B	Dimensions D	Contact Finish (Plating Code)	Part Numbers With Boardlocks: With Threaded Inserts	Part Numbers With Boardlocks: With Fixed Female Screwlocks
1	9	**1.213** 30.81	**.984** 24.99	**.235** 5.97	A	747848-4	—
2	15	**1.541** 39.14	**1.312** 33.33	**.235** 5.97	A	747849-4	—
3	25	**2.088** 53.04	**1.852** 47.04	**.230** 5.84	A	—	747850-6

Notes: 1. All plug connectors are preloaded with size 20 DF posted pin contacts.
2. Recommended pc board thickness is .062 [1.58] for connectors with boardlocks and .093 [2.36] max. for all others.
3. Male screw retainers (page 1058) are used as mating hardware for connectors with 4-40 female screwlocks.

For complete product information, order Catalog 82068

Products for Industrial & Commercial Applications
Dimensions are shown for reference purposes only.
Dimensions are in inches and millimeters unless otherwise specified. Values in brackets are metric equivalents.
Specifications subject to change.
Technical Support Center 1-800-522-6752 www.tycoelectronics.com

HD-20 Front Metal-Shell Right-Angle Posted PCB Connectors 478 Mount

Receptacle

Post Size—.026 [0.66] Dia.



With Grounding Straps

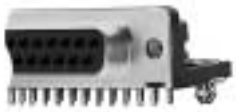

With Threaded Insert



With Fixed Female Screwlock

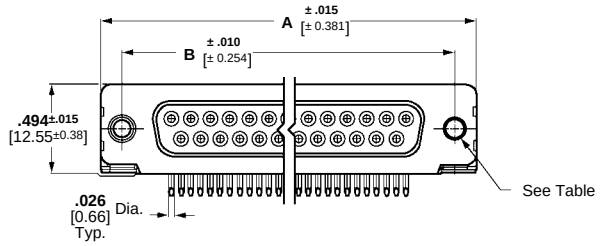

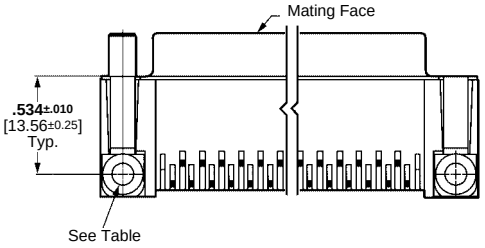

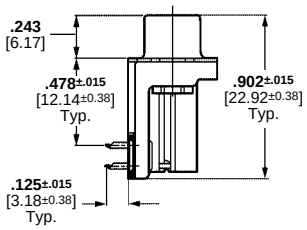

Material and Finish:

Front Shell—Steel, tin plated

Housing—94V-0 rated thermoplastic, black

Eyelets—Brass, tin plated

Threaded Inserts—Zinc

Female Screwlock—Zinc

Boardlocks—Copper alloy, tin-lead plated

Socket Contacts (Posted)—Phosphor bronze, duplex plated as follows:

A—.000030 [0.00076] gold on mating end, tin-lead on termination end, with entire contact nickel underplated

B—Gold flash on mating end, tin-lead on termination end, with entire contact nickel underplated

Related Product Data:

Mateable Connectors:

HDE—pages 1027-1032

HDF—pages 1034-1038

HDP—page 1040-1042

Technical Documents:

Product Specification
108-40025

Application Specification
114-40010

Shell Size	No. of Contact Positions	Dimensions A	Dimensions B	Contact Finish (Plating Code)	Part Numbers: Without Boardlocks, With Threaded Inserts	Part Numbers: With Boardlocks, With Threaded Inserts
1	9	**1.213** 30.81	**.984** 24.99	A	747418-4	747852-4
2	15	**1.541** 39.14	**1.312** 33.33	A	—	747853-4
3	25	**2.088** 53.04	**1.852** 47.04	A	—	747854-4

Notes: 1. All receptacle connectors are preloaded with size 20 DF posted socket contacts.
2. Recommended pc board thickness is .062 [1.58] for connectors with boardlocks and .093 [2.36] max. for all others.
3. Male screw retainers (page 1058) are used as mating hardware for connectors with 4-40 female screwlocks.

For complete product information, order Catalog 82068

Products for Industrial & Commercial Applications
Dimensions are shown for reference purposes only.
Dimensions are in inches and millimeters unless otherwise specified. Values in brackets are metric equivalents.
Specifications subject to change.
Technical Support Center 1-800-522-6752 www.tycoelectronics.com

HD-20 Full Metal-Shell Right-Angle Posted PCB Connectors 545 Mount

Plug

Post Size—.025 [0.64] Sq.



Without Grounding Indents



With Grounding Indents



With 4-40 Female Screwlocks

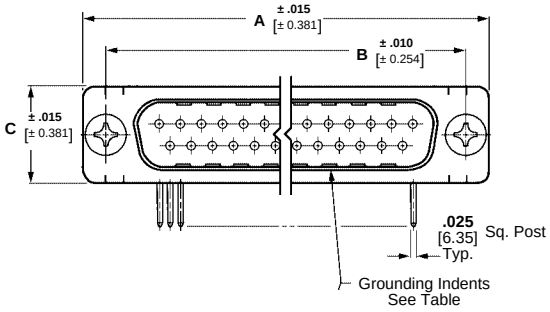

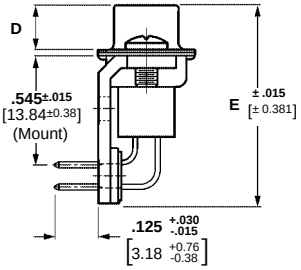

With Standard Mounting Screws

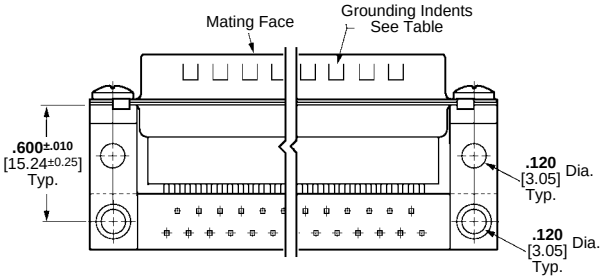

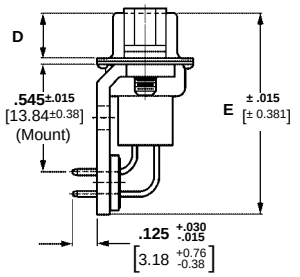

With 4-40 Female Screwlocks

Material and Finish:

Shell—Steel, tin plated

Insert—94V-0 rated thermoplastic, black

Female Screwlock—Steel, zinc plated

Pin Contacts (Posted)—Brass, duplex plated as follows:

A—.000030 [0.00076] gold on mating end, tin-lead on termination end, with entire contact nickel underplated

B—Gold flash on mating end, tin-lead on termination end, with entire contact nickel underplated

Related Product Data:

Mateable Connectors:

HDE—pages 1027, 1028

HDF—pages 1034-1038

HDP—page 1040

Technical Documents:

Product Specification
108-40025

Application Specification
114-40013

Shell Size	No. of Contact Positions	Dimensions A	B	C	D	E	Contact Finish (Plating Code)	Part Numbers: Without Grounding Indents — With Standard Mounting Screws*	With Grounding Indents — With Standard Mounting Screws	With Grounding Indents — With Female Screwlocks
1	9	**1.213** 30.81	**.984** 24.99	**.494** 12.55	**.235** 5.99	**1.025** 26.04	A	745351-2	745351-4	747197-4
2	15	**1.541** 39.14	**1.312** 33.33	**.494** 12.55	**.235** 5.99	**1.025** 26.04	A	—	745352-4	—
							B	745352-1	—	—
3	25	**2.088** 53.04	**1.852** 47.04	**.494** 12.55	**.230** 5.84	**1.029** 26.14	A	—	745353-4	747022-2
							B	745353-1	745353-3	—
4	37	**2.729** 69.32	**2.500** 63.50	**.494** 12.55	**.230** 5.84	**1.029** 26.14	A	—	745354-4	747444-2
							B	—	745354-3	—
5	50	**2.635** 66.93	**2.406** 61.11	**.605** 15.37	**.230** 5.84	**1.149** 29.19	A	—	745355-4	747497-4
							B	—	—	747497-3

*These plugs can be made available with female screwlocks, consult Tyco Electronics.

Notes: 1. All plugs are preloaded with size 20 DF posted pin contacts.
2. Recommended pc board thickness is .093 [2.36] max.
3. Male screw retainers (page 1058) are used as mating hardware for connectors with 4-40 female screwlocks.

For complete product information, order Catalog 82068

Products for Industrial & Commercial Applications
Dimensions are shown for reference purposes only.
Dimensions are in inches and millimeters unless otherwise specified. Values in brackets are metric equivalents.
Specifications subject to change.
Technical Support Center
1-800-522-6752
www.tycoelectronics.com

HD-20 Full Metal-Shell Right-Angle Posted PCB Connectors 545 Mount

Receptacle

Post Size—.025 [0.64] Sq.





With 4-40 Female Screwlocks

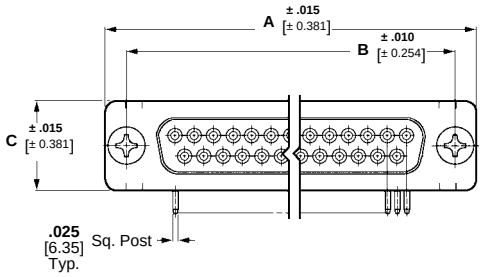

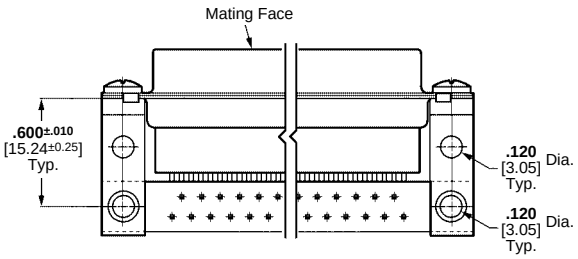

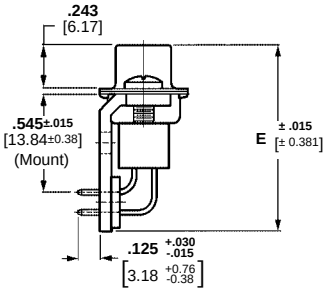

Material and Finish:

Shell—Steel, tin plated

Insert—94V-0 rated thermoplastic, black

Female Screwlock—Steel, zinc plated

Socket Contacts (Posted)—Phosphor bronze, duplex plated as follows:

A—.000030 [0.00076] gold on mating end, tin-lead on termination end, with entire contact nickel underplated

B—Gold flash on mating end, tin-lead on termination end, with entire contact nickel underplated

Related Product Data:

Mateable Connectors:

HDE—pages 1027, 1028

HDF—pages 1034-1038

HDP—page 1040-1042

Technical Documents:

Product Specification
108-40025

Application Specification
114-40013

Shell Size	No. of Contact Positions	Dimensions				Contact Finish (Plating Code)	Part Numbers	
		A	B	C	E		With Standard Mounting Screws	With Female Screwlocks
1	9	**1.213** 30.81	**.984** 24.99	**.494** 12.55	**1.033** 26.24	A	745112-2	747020-2
						B	—	747020-1
2	15	**1.541** 39.14	**1.312** 33.33	**.494** 12.55	**1.033** 26.24	A	745113-2	747021-2
3	25	**2.088** 53.04	**1.852** 47.04	**.494** 12.55	**1.033** 26.24	A	745114-2	745536-2
						B	—	745536-1
4	37	**2.729** 69.32	**2.500** 63.50	**.494** 12.55	**1.033** 26.24	A	745115-2	745964-2
						B	745115-1	—
5	50	**2.635** 66.93	**2.406** 61.11	**.605** 15.37	**1.153** 29.29	A	745116-2	747193-2
						B	745116-1	747193-1

Notes: 1. All receptacles are preloaded with size 20 DF posted socket contacts.
2. Recommended pc board thickness is .093 [2.36] max.
3. Male screw retainers (page 1058) are used as mating hardware for connectors with 4-40 female screwlocks.

For complete product information, order Catalog 82068

Products for Industrial & Commercial Applications
Dimensions are shown for reference purposes only.
Dimensions are in inches and millimeters unless otherwise specified. Values in brackets are metric equivalents.
Specifications subject to change.
Technical Support Center 1-800-522-6752 www.tycoelectronics.com

HD-20 Front Metal-Shell Right-Angle Posted PCB Connectors 590 Mount

Plug

Post Size—.026 [0.66] Dia.



With Grounding Indents and Grounding Straps



With Threaded Insert



With Fixed Female Screwlock

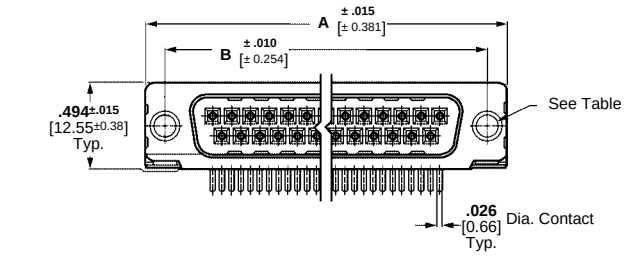

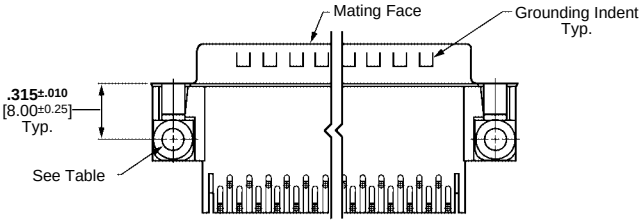

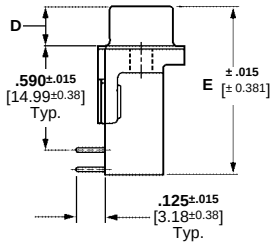

Material and Finish:

Front Shell—Steel, tin plated

Housing—94V-0 rated thermoplastic, black

Eyelets—Brass, tin plated

Threaded Inserts—Zinc

Female Screwlock—Zinc

Boardlocks—Copper alloy, tin-lead plated

Pin Contacts (Posted)—Brass, duplex plated as follows:

A—.000030 [0.00076] gold on mating end, tin-lead on termination end, with entire contact nickel underplated

B—Gold flash on mating end, tin-lead on termination end, with entire contact nickel underplated

Related Product Data:

Mateable Connectors:

HDE—pages 1027-1032

HDF—pages 1034-1038

HDP—page 1040-1042

Technical Documents:

Product Specification
108-40025

Application Specification
114-40010

Shell Size	No. of Contact Positions	Dimensions				Contact Finish (Plating Code)	Part Numbers		
							Without Boardlocks	With Boardlocks	
		A	B	D	E		With Threaded Inserts	With Threaded Inserts	With Fixed Female Screwlocks
1	9	**1.213** 30.81	**.984** 24.99	**.235** 5.97	**.965** 24.51	A	745990-4	747832-4	747832-6
						B	745990-3	747832-3	—
2	15	**1.541** 39.14	**1.312** 33.33	**.235** 5.97	**.965** 24.51	A	—	747833-4	747833-6
3	25	**2.088** 53.04	**1.852** 47.04	**.230** 5.84	**.970** 24.64	A	745994-4	747834-4	747834-6
4	37	**2.729** 69.32	**2.500** 63.50	**.230** 5.84	**.972** 24.69	A	—	747835-4	747835-6

Notes: 1. All plug connectors are preloaded with size 20 DF posted pin contacts.
2. Recommended pc board thickness is .062 [1.58] for connectors with boardlocks and .093 [2.36] max. for all others.
3. Male screw retainers (page 1058) are used as mating hardware for connectors with 4-40 female screwlocks.

For complete product information, order Catalog 82068

Products for Industrial & Commercial Applications
Dimensions are shown for reference purposes only.
Dimensions are in inches and millimeters unless otherwise specified. Values in brackets are metric equivalents.
Specifications subject to change.
Technical Support Center
1-800-522-6752
www.tycoelectronics.com

HD-20 Front Metal-Shell Right-Angle Posted PCB Connectors 590 Mount

Receptacle

Post Size—.026 [0.66] Dia.



With Grounding Straps



With Threaded Insert



With Fixed Female Screwlock

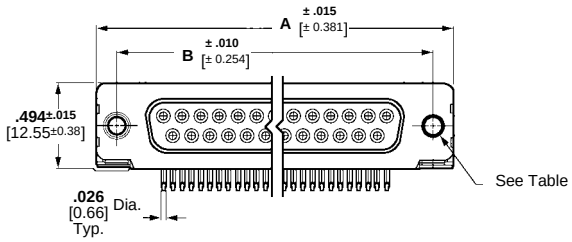

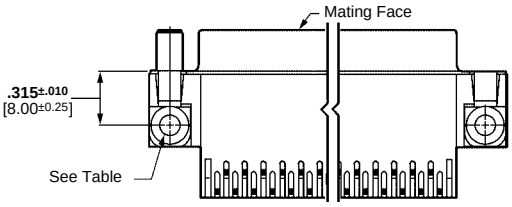

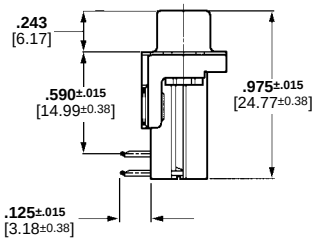

Material and Finish:

Front Shell—Steel, tin plated

Housing—94V-0 rated thermoplastic, black

Eyelets—Brass, tin plated

Threaded Inserts—Zinc

Female Screwlock—Zinc

Boardlocks—Copper alloy, tin-lead plated

Socket Contacts (Posted)—Phosphor bronze, duplex plated as follows:

A—.000030 [0.00076] gold on mating end, tin-lead on termination end, with entire contact nickel underplated

B—Gold flash on mating end, tin-lead on termination end, with entire contact nickel underplated

Related Product Data:

Mateable Connectors:

HDE—pages 1027-1032

HDF—pages 1034-1038

HDP—page 1040-1042

Technical Documents:

Product Specification
108-40025

Application Specification
114-40010

Shell Size	No. of Contact Positions	Dimensions A	Dimensions B	Contact Finish (Plating Code)	Part Numbers: Without Boardlocks: With Threaded Inserts	Part Numbers: Without Boardlocks: With Fixed Female Screwlocks	Part Numbers: With Boardlocks: With Threaded Inserts	Part Numbers: With Boardlocks: With Fixed Female Screwlocks
1	9	**1.213** 30.81	**.984** 24.99	A	745988-4	745988-6	747836-4	747836-6
				B	—	—	747836-3	—
2	15	**1.541** 39.14	**1.312** 33.33	A	745984-4	—	747837-4	—
3	25	**2.088** 53.04	**1.852** 47.04	A	745992-4	745992-6	747838-4	747838-6
				B	745992-3	—	747838-3	—
4	37	**2.729** 69.32	**2.500** 63.50	A	745996-4	—	747839-4	—

Notes: 1. All receptacle connectors are preloaded with size 20 DF posted socket contacts.
2. Recommended pc board thickness is .062 [1.58] for connectors with boardlocks and .093 [2.36] max. for all others.
3. Male screw retainers (page 1058) are used as mating hardware for connectors with 4-40 female screwlocks.

For complete product information, order Catalog 82068

Products for Industrial & Commercial Applications
Dimensions are shown for reference purposes only.
Dimensions are in inches and millimeters unless otherwise specified. Values in brackets are metric equivalents.
Specifications subject to change.
Technical Support Center 1-800-522-6752
www.tycoelectronics.com

HD-20 All-Plastic Right-Angle Posted PCB Connectors 590 Mount

Receptacle—With Boardlocks



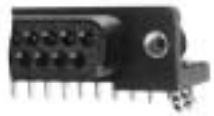

With Threaded Insert



With Fixed Female Screwlock

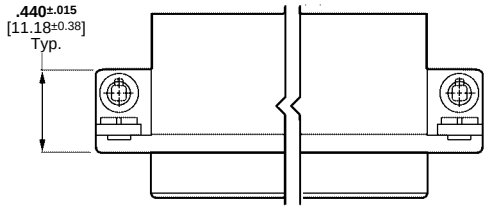

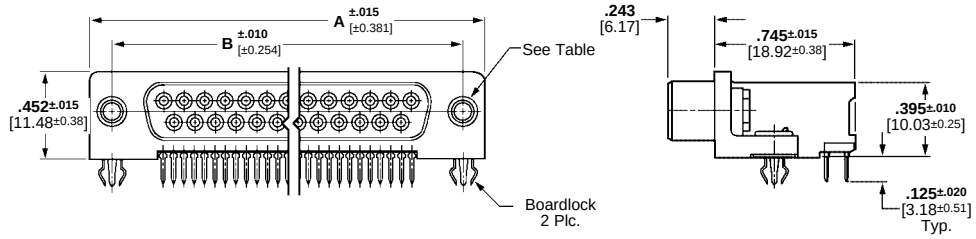

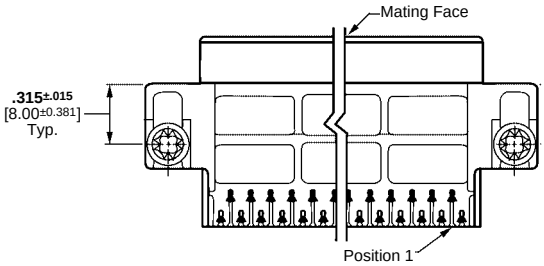

Material and Finish:

Housing—94V-0 rated thermoplastic, black

Eyelets—Brass, tin plated

Threaded Inserts—Zinc

Female Screwlock—Zinc

Boardlock—Copper alloy, tin-lead plated

Socket Contacts (Posted)—Phosphor bronze, duplex plated as follows:

A—.000030 [0.00076] gold on mating end, tin-lead on termination end, with entire contact nickel underplated

B—Gold flash on mating end, tin-lead on termination end, with entire contact nickel underplated

Related Product Data:

Mateable Connectors:

HDE—pages 1027, 1028

HDF—pages 1034-1038

Technical Documents:

Product Specification
108-1226

Application Specification
114-40027

Shell Size	No. of Contact Positions	Dimensions A	Dimensions B	Contact Finish (Plating Code)	Part Numbers With Threaded Inserts	Part Numbers With Fixed Female Screwlocks
1	9	**1.213** 30.81	**.984** 24.99	B	748907-2	—
3	25	**2.088** 53.04	**1.852** 47.04	A	748909-1	748989-1

Notes: 1. All receptacle connectors are preloaded with size 20 DF posted socket contacts.
2. Recommended pc board thickness is .062 [1.58].
3. Male screw retainers (page 1058) are used as mating hardware for connectors with 4-40 female

For complete product information, order Catalog 82068

Products for Industrial & Commercial Applications
Dimensions are shown for reference purposes only.
Dimensions are in inches and millimeters unless otherwise specified. Values in brackets are metric equivalents.
Specifications subject to change.
Technical Support Center
1-800-522-6752
www.tycoelectronics.com

HD-20 All-Plastic Right-Angle Posted PCB Connectors 590 Mount

Receptacle—Without Boardlocks

Post Size—.026 [0.66] Dia.



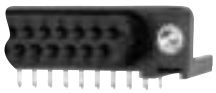

With Threaded Insert

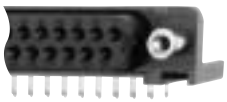

With Female Screwlock

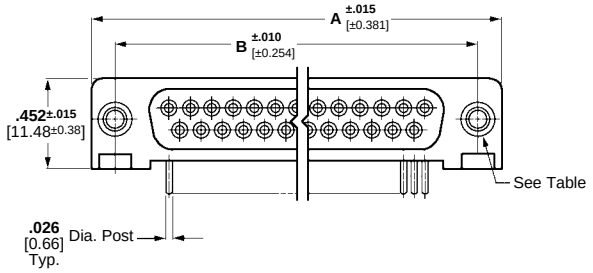

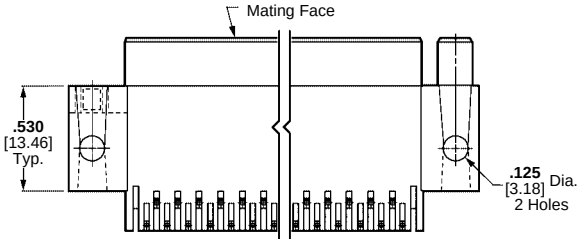

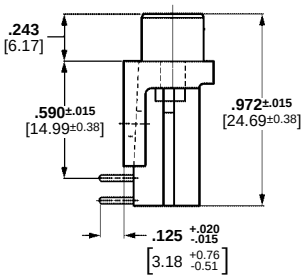

Material and Finish:

Housing—94V-0 rated thermoplastic, black

Threaded Inserts—Zinc, chromate coated

Female Screwlocks—Zinc, chromate coated

Socket Contacts (Posted)—Phosphor bronze, duplex plated as follows:

A—.000030 [0.00076] gold on mating end, tin-lead on termination end, with entire contact nickel underplated

B—Gold flash on mating end, tin-lead on termination end, with entire contact nickel underplated

Related Product Data:

Mateable Connectors:

HDE—pages 1027, 1028

HDF—pages 1034-1038

Technical Documents:

Product Specification
108-40025

Application Specification
114-40015

Shell Size	No. of Contact Positions	Dimensions A	Dimensions B	Contact Finish (Plating Code)	Part Numbers: With Threaded Inserts	Part Numbers: With Fixed Female Screwlocks	Part Numbers: With Standard Mounting Holes
1	9	**1.213** 30.81	**.984** 24.99	A	747459-4	747459-6	747459-2
				B	747459-3	747459-5	747459-1
2	15	**1.541** 39.14	**1.312** 33.32	A	747460-4	748948-1	747460-2
				B	747460-3	747460-5	747460-1
3	25	**2.088** 53.04	**1.852** 47.04	A	747461-4	747461-6	747461-2
				B	747461-3	747461-5	747461-1
4	37	**2.729** 69.32	**2.500** 63.50	A	747462-4	747462-6	747462-2

Notes: 1. All receptacle connectors are preloaded with size 20 DF posted socket contacts.
2. Recommended pc board thickness is .093 [2.36] max.
3. Male screw retainers (page 1058) are used as mating hardware for connectors with 4-40 female screwlocks.

For complete product information, order Catalog 82068

Products for Industrial & Commercial Applications
Dimensions are shown for reference purposes only.
Dimensions are in inches and millimeters unless otherwise specified. Values in brackets are metric equivalents.
Specifications subject to change.
Technical Support Center 1-800-522-6752
www.tycoelectronics.com

HD-20 All-Plastic Right-Angle Posted PCB Connectors 590 Mount

Plug—With Boardlocks





With Female Screwlocks

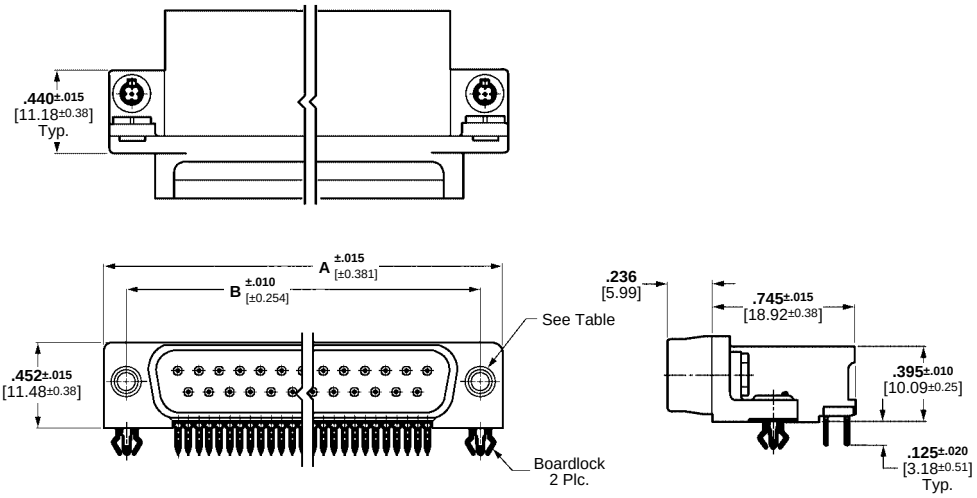

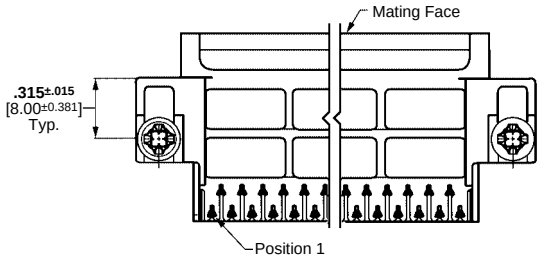

Material and Finish:

Housing—94V-0 rated thermoplastic, black

Eyelets—Brass, tin plated

Threaded Inserts—Zinc

Female Screwlock—Zinc

Boardlock—Copper alloy, tin-lead plated

Pin Contacts (Posted)—Copper alloy, duplex plated as follows:

A—.000030 [0.00076] gold on mating end, tin-lead on termination end, with entire contact nickel underplated

B—Gold flash on mating end, tin-lead on termination end, with entire contact nickel underplated

Related Product Data:

Mateable Connectors:

HDE—pages 1027, 1028

HDF—pages 1034-1038

Technical Documents:

Product Specification
108-1226

Application Specification
114-40027

Shell Size	No. of Contact Positions	Dimensions A	Dimensions B	Contact Finish (Plating Code)	Part Numbers With Fixed Female Screwlocks
3	25	**2.090** 53.09	**1.852** 47.04	B	748993-2

Notes: 1. All plug connectors are preloaded with size 20 DF posted pin contacts.
2. Recommended pc board thickness is .062 [1.58].
3. Male screw retainers (page 1058) are used as mating hardware for connectors with 4-40 female screwlocks.

For complete product information, order Catalog 82068

Products for Industrial & Commercial Applications
Dimensions are shown for reference purposes only.
Dimensions are in inches and millimeters unless otherwise specified. Values in brackets are metric equivalents.
Specifications subject to change.
Technical Support Center
1-800-522-6752
www.tycoelectronics.com

HD-20 All-Plastic Right-Angle Posted PCB Connectors 590 Mount

Plug—Without Boardlocks

Post Size—.026 [0.66] Dia.



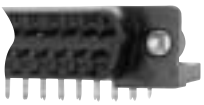

With Threaded Insert

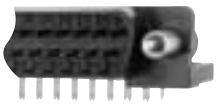

With Female Screwlocks

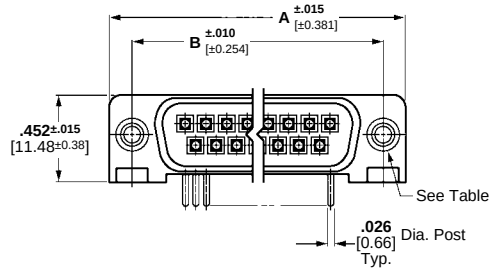

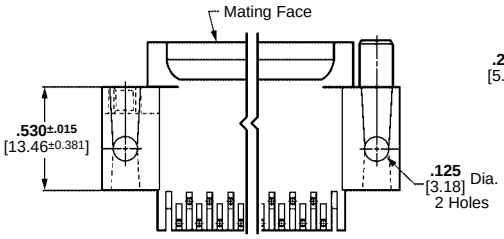

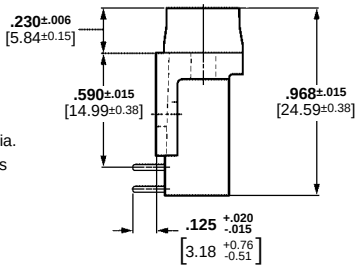

Material and Finish:

Housing—94V-0 rated thermoplastic, black

Threaded Inserts—Zinc, chromate coated

Female Screwlocks—Zinc, chromate coated

Pin Contacts (Posted)—Brass, duplex plated as follows:

A—.000030 [0.00076] gold on mating end, tin-lead on termination end, with entire contact nickel underplated

B—Gold flash on mating end, tin-lead on termination end, with entire contact nickel underplated

Related Product Data:

Mateable Connectors:

HDE—pages 1027, 1028

HDF—pages 1034-1038

Technical Documents:

Product Specification
108-40025

Application Specification
114-40015

Shell Size	No. of Contact Positions	Dimensions A	Dimensions B	Contact Finish (Plating Code)	Part Numbers: With Threaded Inserts	Part Numbers: With Fixed Female Screwlocks	Part Numbers: With Standard Mounting Holes
1	9	**1.213** 30.81	**.984** 24.99	A	747467-4	—	747467-2
				B	—	—	747467-1
2	15	**1.541** 39.14	**1.312** 33.32	A	748872-1	748952-1	747468-2
				B	—	747468-5	—
3	25	**2.090** 53.09	**1.852** 47.04	A	748873-1	748953-1	748826-1
				B	—	—	748826-2
4	37	**2.729** 69.32	**2.500** 63.50	A	—	—	747470-2

Notes: 1. All plug connectors are preloaded with size 20 DF posted pin contacts.
2. Recommended pc board thickness is .093 [2.36] max.
3. Male screw retainers (page 1058) are used as mating hardware for connectors with 4-40 female screwlocks.

For complete product information, order Catalog 82068

Products for Industrial & Commercial Applications
Dimensions are shown for reference purposes only.
Dimensions are in inches and millimeters unless otherwise specified. Values in brackets are metric equivalents.
Specifications subject to change.
Technical Support Center 1-800-522-6752 www.tycoelectronics.com

Straight Posted PCB Connectors

Product Facts:

- Flame retardant thermoplastic housing material, UL 94V-0 rated
- HD-20 straight posted connectors are available in 9, 15, 25, 37 and 50 positions (Shell Sizes 1 thru 5)
- HD-20 straight posted connectors in Full Metal-Shell, Front Metal-Shell and All-Plastic versions
- HD-20 connectors with ACTION PIN contacts are available in low, medium and high profiles with integral standoffs
- ACTION PIN contact connectors for both .093 [2.36] and .062 [1.58] min. thick pc board application
- Various straight posted connectors offer a choice of through-holes, 4-40 threaded inserts or 4-40 fixed female screwlocks
- Choice of contact platings
- Integral boardlock feature secures connector to pc board prior to soldering
- Connectors are intermateable with any size 20 or 22 subminiature D connectors dimensionally complying with MIL-C-24308
- Recognized under the Component Program of Underwriters Laboratories Inc., File No. E28476
- Certified by Canadian Standards Association, File No. LR 164196

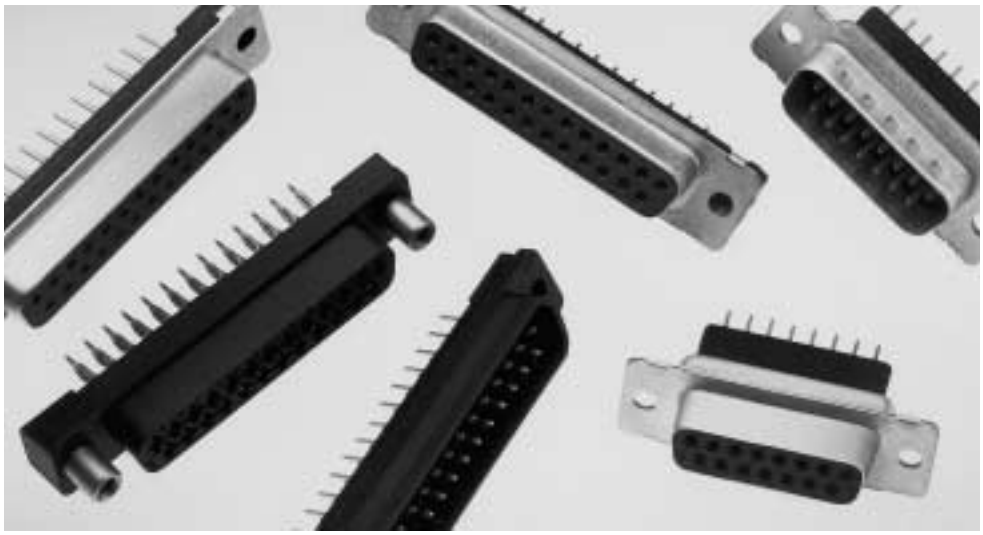

HD-20 Full Metal-Shell Straight Posted PCB Connectors

Plug



Without Grounding Indents



With Grounding Indents

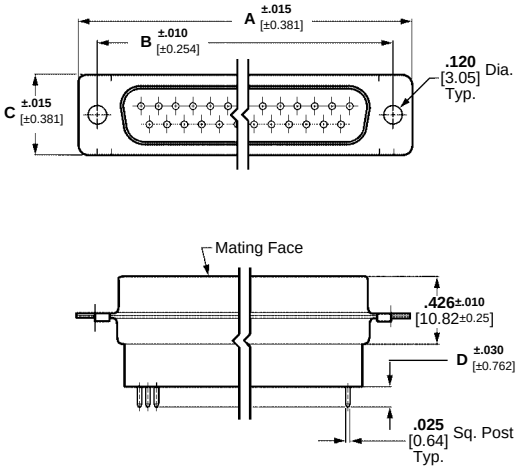

Material and Finish:

Shell—Steel, tin plated

Insert—94V-0 rated thermoplastic, black

Pin Contacts (Posted)—Brass, plated as follows:

A—.000030 [0.00076] gold on mating end, tin-lead on termination end, with entire contact .000050 [0.00127] (min.) nickel underplated

B—Gold flash on mating end, tin-lead on termination end, with entire contact .000050 [0.00127] (min.) nickel underplated

Related Product Data:

Mateable Connectors:

HDE—pages 1027, 1028

HDF—pages 1034-1038

HDP—page 1040-1042

Standoff Bushings—page 1065

Technical Documents:

Product Specification
108-40025

Shell Size	No. of Contact Positions	Dimensions A	Dimensions B	Dimensions C	Dimensions D*	Contact Finish (Plating Code)	Part Numbers: Without Grounding Indents	Part Numbers: With Grounding Indents	Part Numbers: With Clinch Nuts
1	9	**1.213** 30.81	**.984** 24.99	**.494** 12.55	**.125** 3.18	A	—	745410-1	749014-1
						B	745182-2	—	—
					.188 4.78	A	—	745410-7	—
2	15	**1.541** 39.14	**1.312** 33.33	**.494** 12.55	**.125** 3.18	A	—	745411-1	—
3	25	**2.088** 53.04	**1.852** 47.04	**.494** 12.55	**.125** 3.18	A	—	745412-1	745959-1
						B	745186-2	—	—
					.188 4.78	A	—	745412-7	—
4	37	**2.729** 69.32	**2.500** 63.50	**.494** 12.55	**.125** 3.18	A	—	745413-1	—
5	50	**2.635** 66.93	**2.406** 61.11	**.605** 15.37	**.125** 3.18	A	—	745414-1	—
					.188 4.78	A	—	745414-7	—

*.125 [3.18] post length is for recommended pc board thickness of .062-.093 [1.58-2.36] max.; .188 [4.78] post length is for recommended pc board thickness of .125 [3.18].

Notes: 1 All plugs are preloaded with size 20 DF posted pin contacts.
2 Special loading of contacts can be arranged upon request.
3 Longer post lengths available, consult Tyco Electronics.

For complete product information, order Catalog 82068

Products for Industrial & Commercial Applications
Dimensions are shown for reference purposes only.
Dimensions are in inches and millimeters unless otherwise specified. Values in brackets are metric equivalents.
Specifications subject to change.
Technical Support Center
1-800-522-6752
www.tycoelectronics.com

HD-20 Full Metal-Shell Straight Posted PCB Connectors

Receptacle





With Clinch Nuts

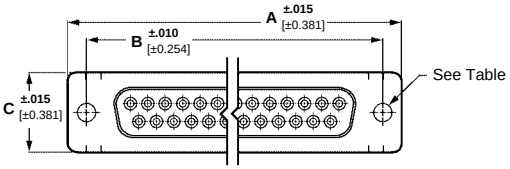

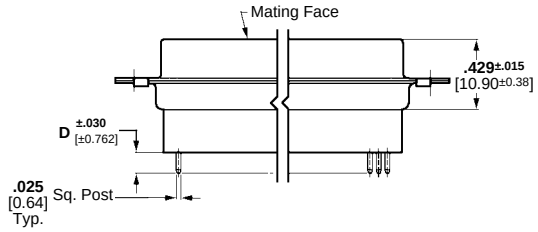

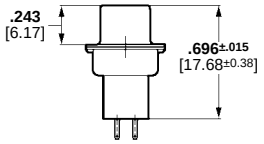

Material and Finish:

Shell—Steel, tin plated

Insert—94V-0 rated thermoplastic, black

Clinch Nuts—Steel, zinc plated

Socket Contacts (Posted)—Phosphor bronze, plated as follows:

A—.000030 [0.00076] gold on mating end, tin-lead on termination end, with entire contact .000050 [0.00127] (min.) nickel underplated

B—Gold flash on mating end, tin-lead on termination end, with entire contact .000050 [0.00127] (min.) nickel underplated

Related Product Data:

Mateable Connectors:

HDE—pages 1027, 1028

HDF—pages 1034-1038

HDP—page 1040-1042

Standoff Bushings—page 1065

Technical Documents:

Product Specification
108-40025

Shell Size	No. of Contact Positions	Dimensions A	Dimensions B	Dimensions C	Dimensions D*	Contact Finish (Plating Code)	Part Numbers With .120 [3.05] Mounting Holes	Part Numbers With Clinch Nuts
1	9	**1.213** 30.81	**.984** 24.99	**.494** 12.55	**.125** 3.18	A	745183-1	747190-2
						B	745183-2	747190-1
					.188 4.78	A	745183-7	747190-4
2	15	**1.541** 39.14	**1.312** 33.33	**.494** 12.55	**.125** 3.18	A	745185-1	745820-1
						B	—	745820-2
					.188 4.78	A	745185-7	745820-7
3	25	**2.088** 53.04	**1.852** 47.04	**.494** 12.55	**.125** 3.18	A	745187-1	745886-1
						B	—	745886-2
					.188 4.78	A	745187-7	—
						B	745187-8	—
4	37	**2.729** 69.32	**2.500** 63.50	**.494** 12.55	**.125** 3.18	A	745189-1	747315-1
					.188 4.78	A	745189-7	—
5	50	**2.635** 66.93	**2.406** 61.11	**.605** 15.37	**.125** 3.18	A	745191-1	747302-1
					.188 4.78	A	745191-7	—

*.125 [3.18] post length is for recommended pc board thickness of .062-.093 [1.58-2.36] max.; .188 [4.78] post length is for recommended pc board thickness of .093-.125 [2.36-3.18].

Notes: 1. All receptacles are preloaded with size 20 DF posted socket contacts.
2. Special loading of contacts can be arranged upon request.
3. Longer post lengths available, consult Tyco Electronics.

For complete product information, order Catalog 82068

Products for Industrial & Commercial Applications
Dimensions are shown for reference purposes only.
Dimensions are in inches and millimeters unless otherwise specified. Values in brackets are metric equivalents.
Specifications subject to change.
Technical Support Center
1-800-522-6752
www.tycoelectronics.com

HD-20 Front Metal-Shell Straight Posted PCB Connectors

Plug



With Grounding Indents



With Threaded Insert



With Fixed Female Screwlock



With Retention

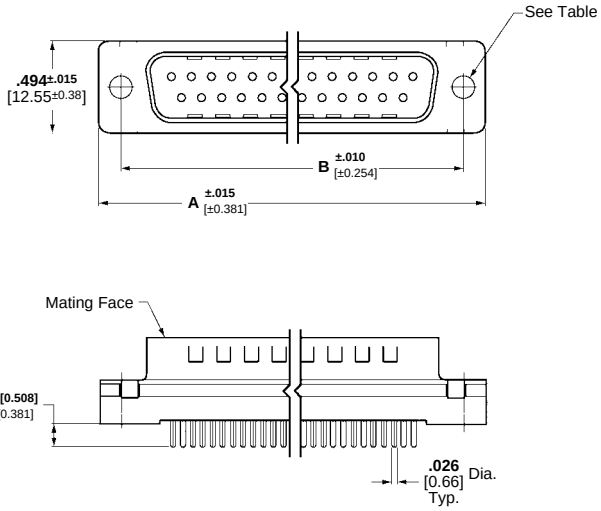

Material and Finish:

Shell—Steel, tin plated

Housing—94V-0 rated thermoplastic, black

Threaded Inserts—Brass, unplated

Female Screwlocks—Zinc

Pin Contacts (Posted)—Brass, plated as follows:

A—.000030 [0.00076] gold on mating end, tin-lead on termination end, with entire contact .000050 [0.00127] (min.) nickel underplated

B—Gold flash on mating end, tin-lead on termination end, with entire contact .000050 [0.00127] (min.) nickel underplated

Related Product Data:

Mateable Connectors:

HDE—pages 1027, 1028

HDF—pages 1034-1038

HDP—page 1040-1042

Technical Documents:

Product Specification
108-40025

Application Specification
114-40023

Shell Size	No. of Contact Positions	Dimensions A	Dimensions B	Dimensions C*	Contact Finish (Plating Code)	Part Numbers: With Standard Mounting Holes	With 4-40 Threaded Inserts	With Retention 4-40 Inserts (for .062 [1.58] PCB)	With Fixed Female Screwlocks	With Retention 4-40 Screwlocks (for .062 [1.58] PCB)
1	9	**1.213** 30.81	**.984** 24.99	**.125** 3.18	A	747871-2	747871-8	2-748003-0	1-747871-4	—
					B	—	—	—	1-747871-3	—
				.170 4.32	A	747871-4	—	—	1-747871-6	—
2	15	**1.541** 39.14	**1.312** 33.33	**.125** 3.18	A	—	747872-8	—	—	748026-1
				.170 4.32	A	747872-4	—	—	1-747872-6	—
3	25	**2.090** **53.09**	**1.852** **47.04**	**.125** 3.18	A	745968-2	745968-8	2-747704-0	1-745968-4	748027-1
					B	—	745968-7	—	1-745968-3	—
				.170 4.32	A	745968-4	—	—	1-745968-6	—
					B	—	—	—	1-745968-5	—
4	37	**2.732** 69.39	**2.500** 63.50	**.125** 3.18	A	747375-2	747375-8	—	—	787686-1

*.125 [3.18] post length is recommended for pc board thickness of .062-.093 [1.58-2.36] max.; .170 [4.32] post length is recommended for pc board thickness of .093-.125 [2.36-3.18]; .250 [6.35] post length is for special applications

Notes: 1. All plugs are preloaded with size 20 DF posted pin contacts.
2. Male screw retainers (page 1058) are used as mating hardware for connectors with 4-40 female screwlocks.
3. PC board hole size is .121±.002 [3.07±0.0508] for all retention inserts and screwlocks.

For complete product information, order Catalog 82068

Products for Industrial & Commercial Applications
Dimensions are shown for reference purposes only.
Dimensions are in inches and millimeters unless otherwise specified. Values in brackets are metric equivalents.
Specifications subject to change.
Technical Support Center
1-800-522-6752
www.tycoelectronics.com

HD-20 Front Metal-Shell Straight Posted PCB Connectors

Receptacle



With Standard Mounting Holes



With Threaded Insert



With Fixed Female Screwlock



With Retention

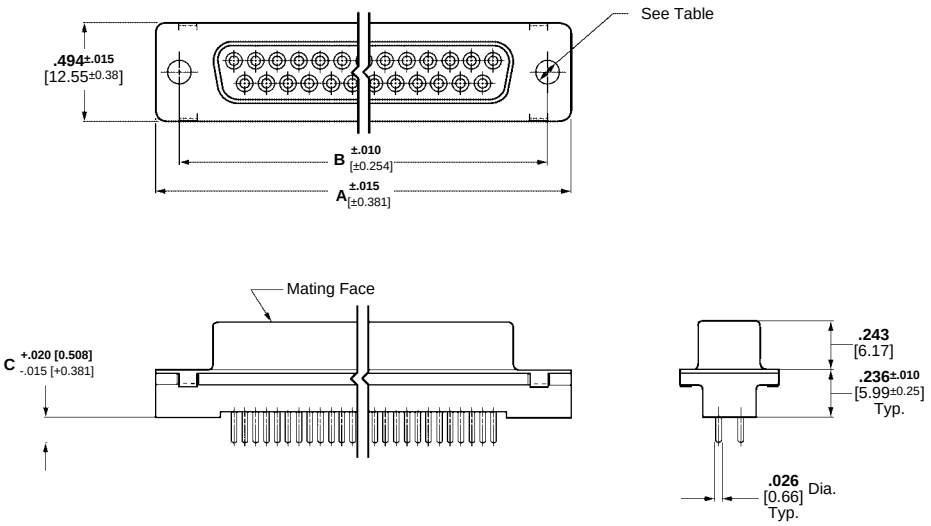

Material and Finish:

Shell—Steel, tin plated

Housing—94V-0 rated thermoplastic, black

Threaded Inserts—Brass, unplated

Female Screwlocks—Zinc

Socket Contacts (Posted)—Phosphor bronze, plated as follows:

A—.000030 [0.00076] gold on mating end, tin-lead on termination end, with entire contact .000050 [0.00127] (min.) nickel underplated

B—Gold flash on mating end, tin-lead on termination end, with entire contact .000050 [0.00127] (min.) nickel underplated

Related Product Data:

Mateable Connectors:

HDE—pages 1027, 1028

HDF—pages 1034-1038

HDP—page 1040-1042

Technical Documents:

Product Specification
108-40025

Application Specification
114-40023

Shell Size	No. of Contact Positions	Dimensions A	Dimensions B	Dimensions C*	Contact Finish (Plating Code)	Part Numbers: With Standard Mounting Holes	With 4-40 Threaded Inserts	With Retention 4-40 Inserts (for .062 [1.58] PCB)	With Fixed Female Screwlocks	With Retention 4-40 Screwlocks (for .062 [1.58] PCB)
1	9	**1.216** 30.89	**.984** 24.99	**.125** 3.18	A	747150-2	747150-8	2-747706-0	1-747150-4	750678-1
					B	—	747150-7	—	1-747150-3	—
				.170 4.32	A	747150-4	1-747150-0	—	1-747150-6	—
					B	—	747150-9	—	—	—
2	15	**1.541** 39.14	**1.312** 33.33	**.125** 3.18	A	747299-2	747299-8	2-747707-0	1-747299-4	787683-1
					B	—	747299-7	—	1-747299-3	—
				.170 4.32	A	747299-4	1-747299-0	—	1-747299-6	—
3	25	**2.090** 53.09	**1.852** 47.04	**.125** 3.18	A	745967-2	745967-8	2-747708-0	1-745967-4	748612-1
					B	—	745967-7	1-747708-9	—	—
				.170 4.32	A	745967-4	1-745967-0	—	1-745967-6	—
					B	—	—	—	1-745967-5	—
4	37	**2.732** 69.39	**2.500** 63.50	**.125** 3.18	A	747301-2	747301-8	2-747709-0	1-747301-4	787685-1
					B	—	747301-7	—	—	—
				.170 4.32	A	—	—	—	1-747301-6	—

*.125 [3.18] post length is recommended for pc board thickness of .062-.093 [1.58-2.36] max.; .170 [4.32] post length is recommended for pc board thickness of .093-.125 [2.36-3.18]; .250 [6.35] post length is for special applications

Notes: 1. All receptacles are preloaded with size 20 DF posted socket contacts.
2. Male screw retainers (page 1058) are used as mating hardware for connectors with 4-40 female screwlocks.
3. Pc board hole size is .121±.002 [3.07±0.0508] for all retention inserts and screwlocks.

For complete product information, order Catalog 82068

HD-20 All-Plastic Straight Posted PCB Connectors

Plug



With Standard Mounting Hole



With Threaded Insert



With Fixed Female Screwlock

Material and Finish:

Housing—94V-0 rated thermoplastic, black

Threaded Inserts—Brass, unplated

Female Screwlocks—Brass, nickel plated

Pin Contacts (Posted)—Brass, plated as follows:

A—.000030 [0.00076] gold on mating end, tin-lead on termination end, with entire contact .000050 [0.00127] (min.) nickel underplated

B—Gold flash on mating end, tin-lead on termination end, with entire contact .000050 [0.00127] (min.) nickel underplated

Related Product Data:

Mateable Connectors:

HDE—pages 1027, 1028

HDF—pages 1034-1038

Technical Documents:

Product Specification
108-40025

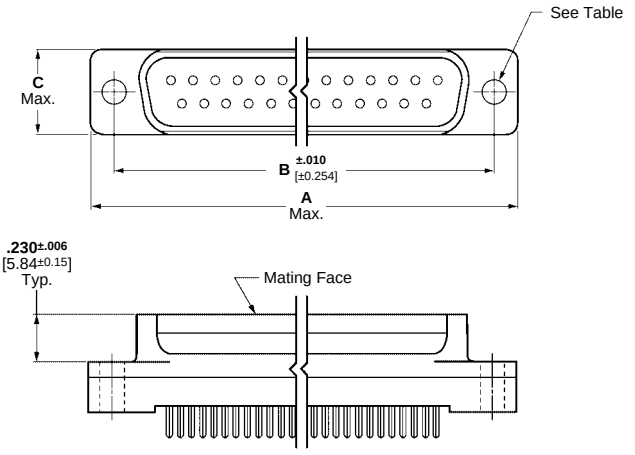

Typical Applications

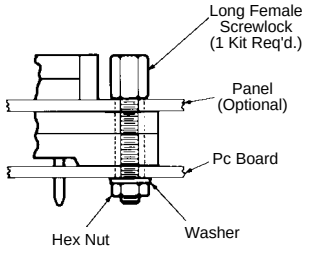

Application of connector with standard mounting holes using Long Female Screwlock Kit Part Number 207719 (page 1059).

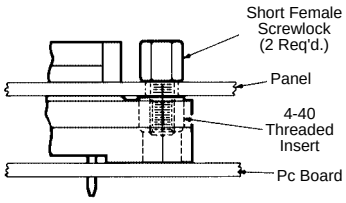

Application of connector with 4-40 Threaded Inserts using Short Female Screwlocks included in Kit Part Number 207952 (page 1059).

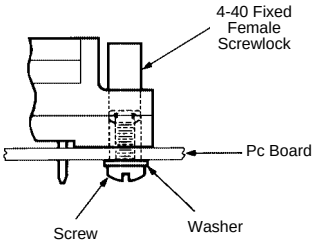

Application of connector with 4-40 Fixed Female Screwlocks.

Note: Hardware parts in illustrations above are not included with the connectors listed in this table. They are to be supplied by the Customer or, where applicable, purchased separately from AMP using the part nos. specified.

Shell Size	No. of Contact Positions	Dimensions A	Dimensions B	Dimensions C	Dimensions D*	Contact Finish (Plating Code)	Part Numbers: With Standard Mounting Holes	Part Numbers: With Threaded Inserts	Part Numbers: With Fixed Female Screwlocks
1	9	**1.228** 32.72	**.984** 24.99	**.420** 10.67	**.125** 3.18	A	208006-2	745051-2	745071-2
						B	208006-1	745051-1	745071-1
					.170 4.32	A	—	745051-4	745071-4
2	15	**1.546** 39.27	**1.312** 33.33	**.420** 10.67	**.125** 3.18	A	208007-2	745052-2	745072-2
						B	—	745052-1	745072-1
					.170 4.32	A	208007-4	—	745072-4
3	25	**2.095** 53.21	**1.852** 47.04	**.420** 10.67	**.125** 3.18	A	208008-2	745053-2	745073-2
						B	208008-1	745053-1	745073-1
					.170 4.32	A	208008-4	—	—
						B	—	—	745073-3
4	37	**2.737** 69.52	**2.500** 63.50	**.420** 10.67	**.125** 3.18	A	—	—	745074-2
						B	208009-1	—	745074-1
					.170 4.32	A	—	745054-4	745074-4
						B	208009-3	—	—
5	50	**2.643** 67.13	**2.406** 61.11	**.527** 13.39	**.125** 3.18	A	208010-2	—	—
						B	208010-1	745055-1	—
					.170 4.32	B	—	—	745075-3

*.125 [3.18] post length is recommended for pc board thickness of .062-.093 [1.58-2.36] max.; .170 [4.32] post length is recommended for pc board thickness of .093-.125 [2.36-3.18]; .250 [6.35] post length is for special applications.

Notes: 1. All plugs are preloaded with size 20 DF posted pin contacts.
2. It is recommended that these connectors be secured with appropriate hardware to a pc board and/or panel.
3. Male screw retainers (page 1058) are used as mating hardware for connectors with 4-40 female screwlocks.

For complete product information, order Catalog 82068

Products for Industrial & Commercial Applications
Dimensions are shown for reference purposes only.
Dimensions are in inches and millimeters unless otherwise specified. Values in brackets are metric equivalents.
Specifications subject to change.
Technical Support Center 1-800-522-6752 www.tycoelectronics.com

HD-20 All-Plastic Straight Posted PCB Connectors

Receptacle



With Standard Mounting Hole



With Threaded Insert



With Fixed Female Screwlock

Material and Finish:

Housing—94V-0 rated thermoplastic, black

Threaded Inserts—Brass, unplated

Female Screwlocks—Brass, nickel plated

Socket Contacts (Posted)—Phosphor bronze, plated as follows:

A—.000030 [0.00076] gold on mating end, tin-lead on termination end, with entire contact .000050 [0.00127] (min.) nickel underplated

B—Gold flash on mating end, tin-lead on termination end, with entire contact .000050 [0.00127] (min.) nickel underplated

Related Product Data:

Mateable Connectors:

HDE—pages 1027, 1028

HDF—pages 1034-1038

Technical Documents:

Product Specification
108-40025

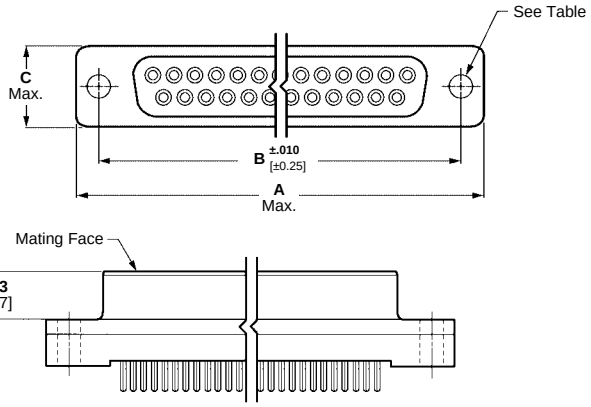

Typical Applications

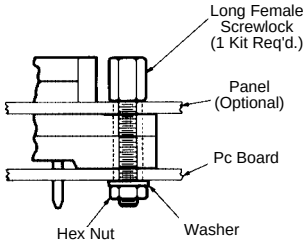

Application of connector with standard mounting holes using Long Female Screwlock Kit Part Number 207719 (page 1059).

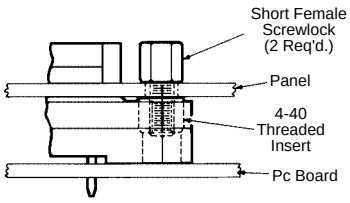

Application of connector with 4-40 Threaded Inserts using Short Female Screwlocks included in Kit Part Number 207952 (page 1059).

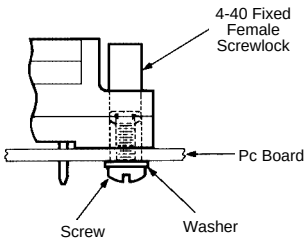

Application of connector with 4-40 Fixed Female Screwlocks.

Note: Hardware parts in illustrations above are not included with the connectors listed in this table. They are to be supplied by the Customer or, where applicable, purchased separately from Tyco Electronics using the part nos. specified.

Shell Size	No. of Contact Positions	Dimensions A	Dimensions B	Dimensions C	Dimensions D*	Contact Finish (Plating Code)	Part Numbers: With Standard Mounting Holes	Part Numbers: With Threaded Inserts	Part Numbers: With Fixed Female Screwlocks
1	9	**1.228** 32.72	**.984** 24.99	**.420** 10.67	**.125** 3.18	A	207826-4	207841-4	745076-4
						B	207826-3	207841-3	745076-3
					.170 4.32	A	—	—	745076-6
						B	—	—	745076-5
2	15	**1.546** 39.27	**1.312** 33.33	**.420** 10.67	**.125** 3.18	A	207827-4	745057-4	745077-4
						B	207827-3	745057-3	745077-3
					.170 4.32	A	207827-6	—	745077-6
						B	—	—	745077-5
3	25	**2.095** 53.21	**1.852** 47.04	**.420** 10.67	**.125** 3.18	A	207828-4	745058-4	745078-4
						B	207828-3	745058-3	745078-3
					.170 4.32	A	207828-6	745058-6	745078-6
						B	207828-5	—	745078-5
4	37	**2.737** 69.52	**2.500** 63.50	**.420** 10.67	**.125** 3.18	A	207829-4	—	745079-4
						B	207829-3	745059-3	—
					.170 4.32	A	207829-6	—	745079-6
5	50	**2.643** 67.13	**2.406** 61.11	**.527** 13.39	**.125** 3.18	A	—	—	745080-4
						B	207830-3	745060-3	745080-3
					.170 4.32	A	—	745060-6	745080-6

*.125 [3.18] post length is recommended for pc board thickness of .062-.093 [1.58-2.36] max.; .170 [4.32] post length is recommended for pc board thickness of .093-.125 [2.36-3.18]; .250 [6.35] post length is for special applications.

Notes: 1. All receptacles are preloaded with size 20 DF posted socket contacts.
2. It is recommended that these connectors be secured with appropriate hardware to a pc board and/or panel.
3. Male screw retainers (page 1058) are used as mating hardware for connectors with 4-40 female screwlocks.

For complete product information, order Catalog 82068

HD-20 Front Metal-Shell Straight Posted PCB Connectors with ACTION PIN Contacts

Receptacle



With Standard Mounting Holes



With Threaded Insert



With Fixed Female Screwlock

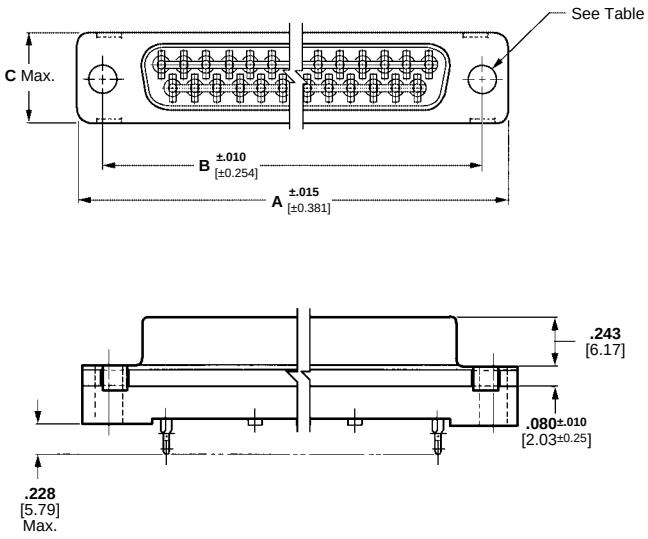

Material and Finish:

Front Shell—Steel, tin plated

Housing—94V-0 rated thermoplastic, black

Threaded Inserts—Brass, unplated

Female Screwlocks—Zinc

ACTION PIN Contacts—Copper alloy, duplex plated as follows:

A—.000030 [0.00076] gold on mating end, tin-lead on ACTION PIN post surface, with entire contact .000050 [0.00127] (min.) nickel underplated

B—Gold flash on mating end, tin-lead on ACTION PIN post surface, with entire contact .000050 [0.00127] (min.) nickel underplated

Related Product Data:

Mateable Connectors:

HDE—pages 1027, 1028

HDF—pages 1034-1038

HDP—page 1040

Technical Documents:

Product Specification
108-40014

Application Specification
114-40026

For .062 [1.57] min. Thick Pc Boards

Shell Size	No. of Contact Positions	Dimensions A	Dimensions B	Dimensions C	Contact Finish (Plating Code)	Part Numbers: With Threaded Inserts	Part Numbers: With Fixed Female Screwlocks	Seating Tool Part Numbers
1	9	**1.213** 30.81	**.984** 24.99	**.509** 12.93	A	748650-1	—	91164-2
3	25	**2.088** 53.04	**1.852** 47.04	**.509** 12.93	B	—	748688-1	91168-2
5	50	**2.635** 66.93	**2.406** 61.11	**.620** 15.75	A	748485-2	—	91167-2

For .093 [2.36] min. Thick Pc Boards

Shell Size	No. of Contact Positions	Dimensions A	Dimensions B	Dimensions C	Contact Finish (Plating Code)	Part Numbers: With Standard Mounting Holes	Part Numbers: With Threaded Inserts	Part Numbers: With Fixed Female Screwlocks	Seating Tool Part Numbers
1	9	**1.213** 30.81	**.984** 24.99	**.509** 12.93	A	747089-2	747090-2	747091-2	91164-2
					B	—	—	747091-1	
2	15	**1.541** 39.14	**1.312** 33.32	**.509** 12.93	A	747140-2	747141-2	747142-2	91165-2
3	25	**2.088** 53.04	**1.852** 47.04	**.509** 12.93	A	745922-2	745925-2	745928-2	91168-2
					B	—	745925-1	745928-1	
4	37	**2.729** 69.32	**2.500** 63.50	**.509** 12.93	A	747713-2	747714-2	747715-2	91166-2
					B	—	747714-1	747715-1	
5	50	**2.635** 66.93	**2.406** 61.11	**.620** 15.75	A	747143-2	747144-2	747145-2	91167-2
					B	—	747144-1	—	

Notes: 1. All receptacles are preloaded with straight posted ACTION PIN socket contacts.
2. Male screw retainers (page 1058) are used as mating hardware for connectors with 4-40 female screwlocks.

For complete product information, order Catalog 82068

Products for Industrial & Commercial Applications
Dimensions are shown for reference purposes only.
Dimensions are in inches and millimeters unless otherwise specified. Values in brackets are metric equivalents.
Specifications subject to change.
Technical Support Center 1-800-522-6752 www.tycoelectronics.com

HD-20 Front Metal-Shell Straight Posted PCB Connectors with ACTION PIN Contacts

Plug



With Standard Mounting Holes



With Threaded Insert



With Fixed Female Screwlock

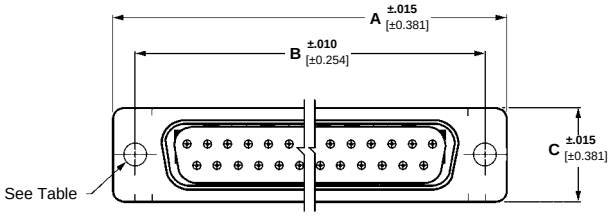

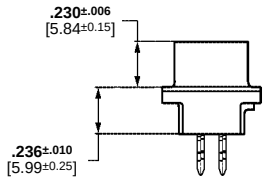

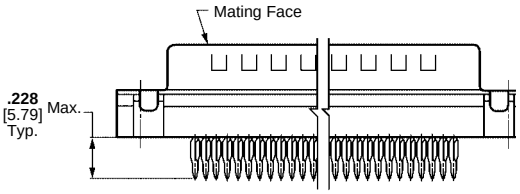

Material and Finish:

Front Shell—Steel, tin plated

Housing—94V-0 rated thermoplastic, black

Threaded Inserts—Brass, unplated

Female Screwlocks—Zinc

ACTION PIN Contacts—Copper alloy, duplex plated as follows:

A—.000030 [0.00076] gold on mating end, tin-lead on ACTION PIN post surface, with entire contact .000050 [0.00127] (min.) nickel underplated

B—Gold flash on mating end, tin-lead on ACTION PIN post surface, with entire contact .000050 [0.00127] (min.) nickel underplated

Related Product Data:

Mateable Connectors:

HDE—pages 1027, 1028

HDF—pages 1034-1038

HDP—page 1040

Technical Documents:

Product Specifiation
108-40014

Application Specification
114-40026

For .093 [2.36] min. Thick Pc Board

Shell Size	No. of Contact Positions	Dimensions A	Dimensions B	Dimensions C	Contact Finish (Plating Code)	Part Numbers: With Standard Mounting Holes	Part Numbers: With Threaded Inserts	Part Numbers: With Fixed Female Screwlocks	Seating Tool Part Numbers
1	9	**1.213** 30.81	**.984** 24.99	**.494** 12.55	A	—	786830-1	787176-1	58274-3
2	15	**1.541** 39.14	**1.312** 33.32	**.494** 12.55	A	—	786831-1	787177-1	58274-6
3	25	**2.088** 53.04	**1.852** 47.04	**.494** 12.55	A	748146-2	748146-4	748146-6	58274-1
4	37	**2.732** 69.39	**2.500** 63.50	**.494** 12.55	A	788458-1	786534-1	750060-1	58274-5
5	50	**2.635** 66.93	**2.406** 61.11	**.605** 15.37	A	748090-2	749892-1	—	58273-1

Notes: 1. All plugs are preloaded with straight posted ACTION PIN pin contacts.
2. Male screw retainers (page 1058) are used as mating hardware for connectors with 4-40 female screwlocks.

HD-20 All-Plastic Straight Posted PCB Connectors with ACTION PIN Contacts

Receptacles (Low and High Profile)



With Standard Mounting Holes



With Threaded Insert



With Fixed Female Screwlock

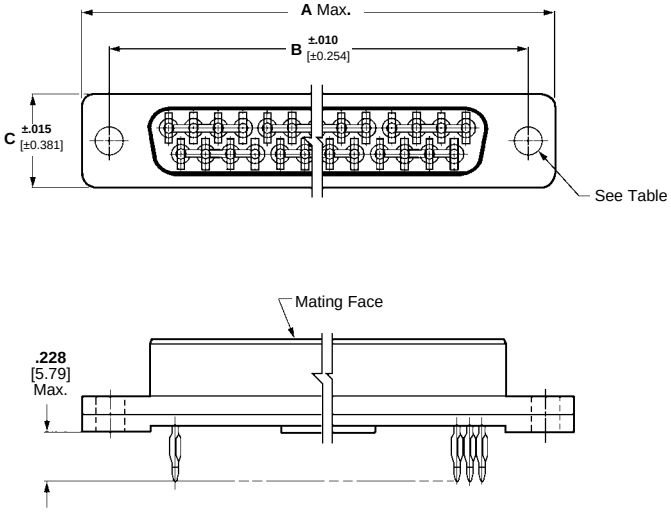

Material and Finish:

Housing—94V-0 rated thermoplastic, black

Threaded Inserts—Brass, unplated

Female Screwlocks—Brass, nickel plated

ACTION PIN Contacts—Copper alloy, duplex plated as follows:

A—.000030 [0.00076] gold on mating end, tin-lead on ACTION PIN post surface, with entire contact .000050 [0.00127] (min.) nickel underplated

B—Gold flash on mating end, tin-lead on ACTION PIN post surface, with entire contact .000050 [0.00127] (min.) nickel underplated

Related Product Data:

Mateable Connectors:

HDE—pages 1027, 1028

HDF—pages 1034-1038

Technical Documents:

Product Specification
108-40014

Shell Size	No. of Contact Positions	Dimensions A	B	C	D	Profile	Contact Finish (Plating Code)	Part Numbers: For .093 [2.36] (min.) Thick Pc Boards: With Standard Mounting Holes	With Threaded Inserts	With Fixed Female Screwlocks	Part Numbers: For .062 [1.57] (min.) Thick PC Boards: With Standard Mounting Holes	With Threaded Inserts	Seating Tool Part Numbers
1	9	**1.221** 31.01	**.984** 24.99	**.410** 10.41	**.395** 10.03	Low	A	—	—	745454-2	—	—	91164-1
					.695 17.65	High	A	—	745463-2	745455-2	—	—	91164-3
2	15	**1.546** 39.27	**1.312** 33.32	**.410** 10.41	**.395** 10.03	Low	A	—	—	745456-2	—	—	91165-1
					.695 17.65	High	A	—	—	—	—	745612-2	91165-3
3	25	**2.095** 53.21	**1.852** 47.04	**.410** 10.41	**.395** 10.03	Low	A	208069-2	—	745458-2	745588-2	—	91168-1
							B	—	—	745458-1	—	—	
					.695 17.65	High	A	—	745465-2	745031-2	—	—	91168-3
							B	208089-1	—	745031-1	—	—	
4	37	**2.737** 69.52	**2.500** 63.50	**.410** 10.41	**.395** 10.03	Low	A	745337-2	—	745459-2	745589-2	—	91166-1
							B	745337-1	—	—	—	—	
					.695 17.65	High	A	—	—	—	745599-2	—	—
5	50	**2.643** 67.13	**2.406** 61.11	**.517** 13.13	**.395** 10.03	Low	A	—	—	745461-2	—	—	91167-1

Notes: 1. All receptacles are preloaded with straight posted ACTION PIN socket contacts.
2. Male screw retainers (page 1058) are used as mating hardware for connectors with 4-40 female screwlocks.

For complete product information, order Catalog 82068

Products for Industrial & Commercial Applications
Dimensions are shown for reference purposes only.
Dimensions are in inches and millimeters unless otherwise specified. Values in brackets are metric equivalents.
Specifications subject to change.
Technical Support Center
1-800-522-6752
www.tycoelectronics.com

Features

- Military qualified connectors conform to the latest amendments of MIL-C-24308
- MIL-C-39029 contacts offer reliability and economies of high speed termination by automatic machine
- Choice of sizes—Size 1 through 5 for Series 109, standard density with 9, 15, 25, 37 and 50 contacts; Size 1 through 6 for Series 90, high density with 15, 26, 44, 62, 78 and 104 contacts
- Series 109 standard density connectors are available with cavities for power or coaxial contacts mixed with size 20 signal contacts
- Right-angle and straight PC board connectors in Series 109, standard density
- Preloaded, straight-posted connectors available in Series 90, high density
- Preloaded, solder cup connectors available in Series 109, standard density

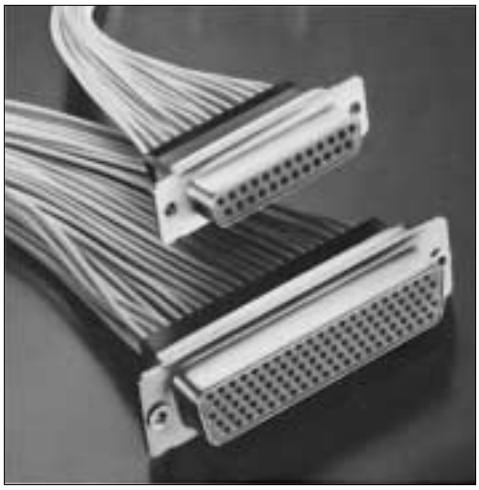

Connectors for crimp, snap-in contacts are available in both series.



Straight posted versions available in both (Series 109) standard density and (Series 90) high density connectors.



Coax or power contacts can be mixed with signal contacts.



Right-angle connectors board mount for Series 109, standard density connections.



A broad range of accessories accommodate many applications.

Standard Density Connectors

Crimp, Series 109

Material and Finish:

Shell—Steel, cadmium plated
Insert—Approved material per MIL-C-24308
Retention Clips—Stainless steel

Related Product Data:

Contacts—page 1102

Attention: Connector marking

Connector marking may differ from package marking. All connectors marked per MIL-C-24308.

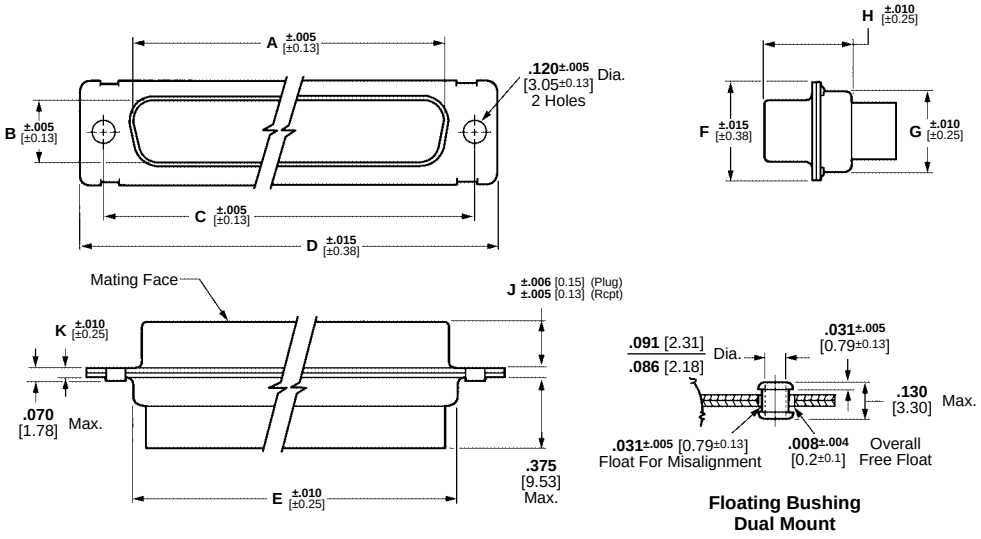

Floating Bushing Dual Mount

Series 109 Plugs per MIL-C-24308

No. of Contact Positions (Shell Size)	Dimensions										Standard Mount		Floating Bushing Mount	
	A[1]	B[1]	C	D	E	F	G	H	J	K	Military Part Numbers M24308/	AMP Part Numbers	Military Part Numbers M24308/	AMP Part Numbers
9 (1)	**.666** 16.92	**.329** 8.36	**.984** 24.99	**1.213** 30.81	**.759** 19.28	**.494** 12.55	**.422** 10.72	**.422** 10.72	**.235** 5.97	**.030** 0.76	4-259F	205162-1	4-324F	205412-1
15 (2)	**.994** 25.25	**.329** 8.36	**1.312** 33.32	**1.541** 39.14	**1.083** 27.51	**.494** 12.55	**.422** 10.72	**.422** 10.72	**.235** 5.97	**.030** 0.76	4-260F	205164-1	4-325F	205408-1
25 (3)	**1.534** 38.96	**.329** 8.36	**1.852** 47.04	**2.088** 53.04	**1.625** 41.3	**.494** 12.55	**.422** 10.72	**.426** 10.82	**.230** 5.84	**.039** 0.99	4-261F	205166-1	4-326F	205413-1
37 (4)	**2.182** 55.42	**.329** 8.36	**2.500** 63.5	**2.729** 69.32	**2.272** 57.71	**.494** 12.55	**.422** 10.72	**.426** 10.82	**.230** 5.84	**.039** 0.99	4-262F	205168-1	4-327F	205414-1
50 (5)	**2.079** 52.81	**.441** 11.2	**2.406** 61.11	**2.635** 66.93	**2.178** 55.32	**.605** 15.37	**.534** 13.56	**.426** 10.82	**.230** 5.84	**.039** 0.99	4-263F	205170-1	4-328F	205415-1

[1] Inside dimension

Series 109 Receptacles per MIL-C-24308

No. of Contact Positions (Shell Size)	Dimensions										Standard Mount		Floating Bushing Mount	
	A[1]	B[1]	C	D	E	F	G	H	J	K	Military Part Numbers M24308/	AMP Part Numbers	Military Part Numbers M24308/	AMP Part Numbers
9 (1)	**.643** 16.33	**.311** 7.9	**.984** 24.99	**1.213** 30.81	**.759** 19.28	**.494** 12.55	**.422** 10.72	**.429** 10.9	**.243** 6.17	**.030** 0.76	2-281F	205161-1	2-292F	205416-1
15 (2)	**.971** 24.66	**.311** 7.9	**1.312** 33.32	**1.541** 39.14	**1.083** 27.51	**.494** 12.55	**.422** 10.72	**.429** 10.9	**.243** 6.17	**.030** 0.76	2-282F	205163-1	2-293F	205417-1
25 (3)	**1.511** 38.38	**.311** 7.9	**1.852** 47.04	**2.088** 53.04	**1.625** 41.3	**.494** 12.55	**.422** 10.72	**.429** 10.9	**.243** 6.17	**.039** 0.99	2-283F	205165-1	2-294F	205418-1
37 (4)	**2.159** 54.84	**.311** 7.9	**2.500** 63.5	**2.729** 69.32	**2.272** 57.71	**.494** 12.55	**.422** 10.72	**.429** 10.9	**.243** 6.17	**.039** 0.99	2-284F	205167-1	2-295F	205419-1
50 (5)	**2.064** 52.43	**.423** 10.74	**2.406** 61.11	**2.635** 66.93	**2.178** 55.32	**.605** 15.37	**.534** 13.56	**.429** 10.9	**.243** 6.17	**.039** 0.99	2-285F	205169-1	2-296F	205420-1

[1] Outside dimension

Notes: 1. Size 20 contacts supplied with connectors are loose piece.
2. "F" is stamped on connectors following **M24308** Part Number as required. "F" designates cadmium shell plating.

Standard Density Connectors

Straight PCB, Series 109

Material and Finish:

Shell—Steel, cadmium plated

Insert—Approved material per MIL-C-24308

Contact—Copper alloy plated gold over nickel underplate
Socket body: .000050 [0.00127] min. gold over .000050 [0.00127] min. nickel
Mating area: .000050 [0.00127] min. gold over .000050 [0.00127] min. nickel

Spacer—Aluminum alloy, Iridite finish

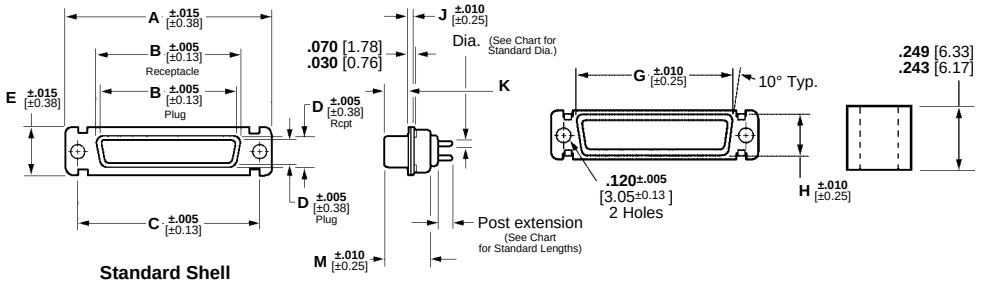

Standard Shell

MS Shell Size	Connector Style	Dimensions									
		A	B	C	D	E	G	H	J	K	M
1	Plug	**1.213** 30.81	**.666** 16.92	**.984** 24.99	**.329** 8.36	**.494** 12.55	**.759** 19.28	**.422** 10.72	**.030** 0.76	**.238/.229** 6.04/5.81	**.422** 10.72
	Receptacle	**1.213** 30.81	**.643** 16.33	**.984** 24.99	**.311** 7.90	**.494** 12.55	**.759** 19.28	**.422** 10.72	**.030** 0.76	**.248/.238** 6.29/6.04	**.429** 10.90
2	Plug	**1.541** 39.14	**.994** 25.25	**1.312** 33.32	**.329** 8.36	**.494** 12.55	**1.083** 27.51	**.422** 10.72	**.030** 0.76	**.238/.229** 6.04/5.81	**.422** 10.72
	Receptacle	**1.541** 39.14	**.971** 24.66	**1.312** 33.32	**.311** 7.90	**.494** 12.55	**1.083** 27.51	**.422** 10.72	**.030** 0.76	**.248/.238** 6.29/6.04	**.429** 10.90
3	Plug	**2.088** 53.04	**1.534** 38.96	**1.852** 47.04	**.329** 8.36	**.494** 12.55	**1.625** 41.28	**.422** 10.72	**.039** 0.99	**.236/.224** 5.99/5.68	**.426** 10.82
	Receptacle	**2.088** 53.04	**1.511** 38.38	**1.852** 47.04	**.311** 7.90	**.494** 12.55	**1.625** 41.28	**.422** 10.72	**.030** 0.76	**.248/.238** 6.29/6.04	**.429** 10.90
4	Plug	**2.729** 69.32	**2.182** 55.42	**2.500** 63.5	**.329** 8.36	**.494** 12.55	**2.272** 57.71	**.422** 10.72	**.039** 0.99	**.236/.224** 5.99/5.68	**.426** 10.82
	Receptacle	**2.729** 69.32	**2.159** 54.84	**2.500** 63.5	**.311** 7.90	**.494** 12.55	**2.272** 57.71	**.422** 10.72	**.030** 0.76	**.248/.238** 6.29/6.04	**.429** 10.90
5	Plug	**2.635** 66.93	**2.079** 52.81	**2.406** 61.11	**.441** 11.20	**.605** 15.37	**2.178** 55.32	**.534** 13.56	**.039** 0.99	**.236/.224** 5.99/5.68	**.426** 10.82
	Receptacle	**2.635** 66.93	**2.064** 52.43	**2.406** 61.11	**.423** 10.74	**.605** 15.37	**2.178** 55.32	**.534** 13.55	**.030** 0.76	**.248/.238** 6.29/6.04	**.429** 10.90

Receptacle Assemblies

Shell Size	No. Positions	Post Dia.	Post Ext. ±.020	Military Part Numbers M24308/	AMP Part Numbers
1	9	**.030** 0.76	**.156** 3.96	23-1F	443975-1
2	15	**.030** 0.76	**.156** 3.96	23-2F	443975-2
3	25	**.030** 0.76	**.156** 3.96	23-3F	443975-3
4	37	**.030** 0.76	**.156** 3.96	23-4F	443975-4
5	50	**.030** 0.76	**.156** 3.96	23-5F	443975-5
1	9	**.030** 0.76	**.188** 4.78	23-7F	443976-1
2	15	**.030** 0.76	**.188** 4.78	23-8F	443976-2
3	25	**.030** 0.76	**.188** 4.78	23-9F	443976-3
4	37	**.030** 0.76	**.188** 4.78	23-10F	443976-4
5	50	**.030** 0.76	**.188** 4.78	23-11F	443976-5
1	9	**.040** 1.02	**.156** 3.96	23-13F	443977-1
2	15	**.040** 1.02	**.156** 3.96	23-14F	443977-2
3	25	**.040** 1.02	**.156** 3.96	23-15F	443977-3
4	37	**.040** 1.02	**.156** 3.96	23-16F	443977-4
5	50	**.040** 1.02	**.156** 3.96	23-17F	443977-5
1	9	**.040** 1.02	**.188** 4.78	23-19F	443978-1
2	15	**.040** 1.02	**.188** 4.78	23-20F	443978-2
3	25	**.040** 1.02	**.188** 4.78	23-21F	443978-3
4	37	**.040** 1.02	**.188** 4.78	23-22F	443978-4
5	50	**.040** 1.02	**.188** 4.78	23-23F	443978-5

Plug Assemblies

Shell Size	No. Positions	Post Dia.	Post Ext. ±.020	Military Part Numbers M24308/	AMP Part Numbers
1	9	**.030** 0.76	**.156** 3.96	24-1F	1218124-1
2	15	**.030** 0.76	**.156** 3.96	24-2F	1218124-2
3	25	**.030** 0.76	**.156** 3.96	24-3F	1218124-3
4	37	**.030** 0.76	**.156** 3.96	24-4F	1218124-4
5	50	**.030** 0.76	**.156** 3.96	24-5F	1218124-5
1	9	**.030** 0.76	**.188** 4.78	24-7F	1218125-1
2	15	**.030** 0.76	**.188** 4.78	24-8F	1218125-2
3	25	**.030** 0.76	**.188** 4.78	24-9F	1218125-3
4	37	**.030** 0.76	**.188** 4.78	24-10F	1218125-4
5	50	**030** 0.76	**.188** 4.78	24-11F	1218125-5
1	9	**.040** 1.02	**.156** 3.96	24-13F	1218126-1
2	15	**.040** 1.02	**.156** 3.96	24-14F	1218126-2
3	25	**.040** 1.02	**.156** 3.96	24-15F	1218126-3
4	37	**.040** 1.02	**.156** 3.96	24-16F	1218126-4
5	50	**.040** 1.02	**.156** 3.96	24-17F	1218126-5
1	9	**.040** 1.02	**.188** 4.78	24-19F	1218127-1
2	15	**.040** 1.02	**.188** 4.78	24-20F	1218127-2
3	25	**040** 1.02	**.188** 4.78	24-21F	1218127-3
4	37	**.040** 1.02	**.188** 4.78	24-22F	1218127-4
5	50	**.040** 1.02	**.188** 4.78	24-23F	1218127-5

Products for Industrial & Commercial Applications

Dimensions are shown for reference purposes only.

Dimensions are in inches and millimeters unless otherwise specified. Values in brackets are metric equivalents.

Specifications subject to change.

Technical Support Center
1-800-522-6752
www.tycoelectronics.com

Standard Density Connectors

Right-Angle, PCB Plugs, Series 109

Material and Finish:

Shell—Steel, cadmium plated

Insert and Post Spacer—Approved material per MIL-C-24308

Contact—Copper alloy plated gold .000050 [0.00127] min. over nickel underplate .000050 [0.00127] min.

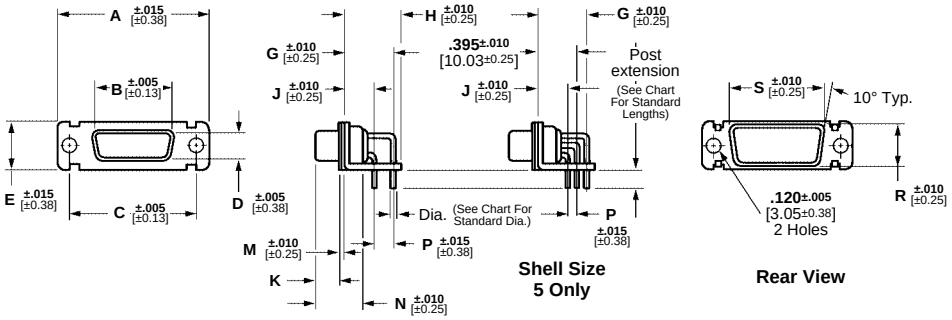

MS Shell Size	Connector Style	Dimensions													
		A	B	C	D	E	G	H	J	K	M	N	P	R	S
1	Plug	**1.213** 30.81	**.666** 16.92	**.984** 24.99	**.329** 8.36	**.494** 12.55	**.395** 10.03	**.484** 12.29	**.283** 7.19	**.238/.229** 6.04/5.81	**.030** 0.76	**.422** 10.72	**.112** 2.84	**.422** 10.72	**.759** 19.28
2	Plug	**1.541** 39.14	**.994** 25.25	**1.312** 33.33	**.329** 8.36	**.494** 12.55	**.395** 10.03	**.484** 12.29	**.283** 7.19	**.238/.229** 6.04/5.81	**.030** 0.76	**.422** 10.72	**.112** 2.84	**.422** 10.72	**1.083** 27.51
3	Plug	**2.088** 53.04	**1.534** 38.96	**1.852** 47.04	**.329** 8.36	**.494** 12.55	**.395** 10.03	**.484** 12.29	**.283** 7.19	**.236/.224** 5.99/5.68	**.039** 0.99	**.426** 10.82	**.112** 2.84	**.422** 10.72	**1.625** 29.59
4	Plug	**2.729** 69.32	**2.182** 55.42	**2.500** 63.5	**.329** 8.36	**.494** 12.55	**.395** 10.03	**.484** 12.29	**.283** 7.19	**.236/.224** 5.99/5.68	**.039** 0.99	**.426** 10.82	**.112** 2.84	**.422** 10.72	**2.272** 57.71
5	Plug	**2.635** 66.93	**2.079** 52.81	**2.406** 61.11	**.441** 10.44	**.605** 15.37	**.507** 12.88	**.594** 15.09	**.283** 7.19	**.236/.224** 5.99/5.68	**.039** 0.99	**.426** 10.82	**.112** 2.84	**.534** 13.56	**2.178** 55.32

Plug Assemblies

Shell Size	No. Positions	Post Dia.	Post Ext. ±.020	Military Part Numbers M24308/	AMP Part Numbers
1	9	**.030** 0.76	**.125** 3.18	24-25F	1218440-1
2	15	**.030** 0.76	**.125** 3.18	24-26F	1218440-2
3	25	**.030** 0.76	**.125** 3.18	24-27F	1218440-3
4	37	**.030** 0.76	**.125** 3.18	24-28F	1218440-4
5	50	**.030** 0.76	**.125** 3.18	24-29F	1218440-5
1	9	**.030** 0.76	**.156** 3.96	24-31F	1218441-1
2	15	**.030** 0.76	**.156** 3.96	24-32F	1218441-2
3	25	**.030** 0.76	**.156** 3.96	24-33F	1218441-3
4	37	**.030** 0.76	**.156** 3.96	24-34F	1218441-4
5	50	**.030** 0.76	**.156** 3.96	24-35F	1218441-5
1	9	**040** 1.02	**.125** 3.18	24-37F	1218442-1
2	15	**.040** 1.02	**.125** 3.18	24-38F	1218442-2
3	25	**.040** 1.02	**.125** 3.18	24-39F	1218442-3
4	37	**.040** 1.02	**.125** 3.18	24-40F	1218442-4
5	50	**.040** 1.02	**.125** 3.18	24-41F	1218442-5

Plug Assemblies

Shell Size	No. Positions	Post Dia.	Post Ext. ±020	Military Part Numbers M24308/	AMP Part Numbers
1	9	**.040** 1.02	**.156** 3.96	24-43F	1218443-1
2	15	**.040** 1.02	**.156** 3.96	24-44F	1218443-2
3	25	**040** 1.02	**.156** 3.96	24-45F	1218443-3
4	37	**.040** 1.02	**.156** 3.96	24-46F	1218443-4
5	50	**.040** 1.02	**.156** 3.96	24-47F	1218443-5
1	9	**.030** 0.76	**.188** 4.78	24-49F	1218444-1
2	15	**.030** 0.76	**.188** 4.78	24-50F	1218444-2
3	25	**.030** 0.76	**.188** 4.78	24-51F	1218444-3
4	37	**.030** 0.76	**.188** 4.78	24-52F	1218444-4
5	50	**.030** 0.76	**.188** 4.78	24-53F	1218444-5
1	9	**.040** 1.02	**.188** 4.78	24-55F	1218445-1
2	15	**.040** 1.02	**.188** 4.78	24-56F	1218445-2
3	25	**.040** 1.02	**.188** 4.78	24-57F	1218445-3
4	37	**.040** 1.02	**.188** 4.78	24-58F	1218445-4
5	50	**.040** 1.02	**.188** 4.78	24-59F	1218445-5

Note: The suffix "F" on M24308 Part Numbers designates cadmium shell plating.

Standard Density Connectors

Right-Angle, PCB Receptacles, Series 109

Material and Finish:

Shell—Steel, cadmium plated

Insert and Post Spacer: Approved material per MIL-C-24308

Contacts:

Socket Body - copper alloy with gold .000050 [0.00127] min. plate over nickel underplate .000050 [0.00127] min. Mating area: Copper alloy with gold plate .000050 [0.00127] min. over nickel underplate .000050 [0.00127] min.

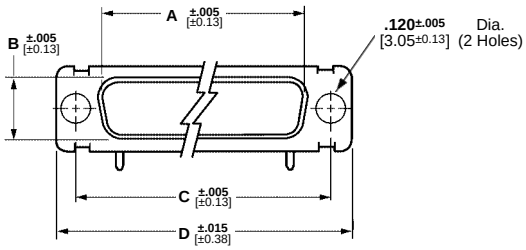

Note: for lettered dimensions see chart on page 1098.

9, 15, 25 and 37 Positions

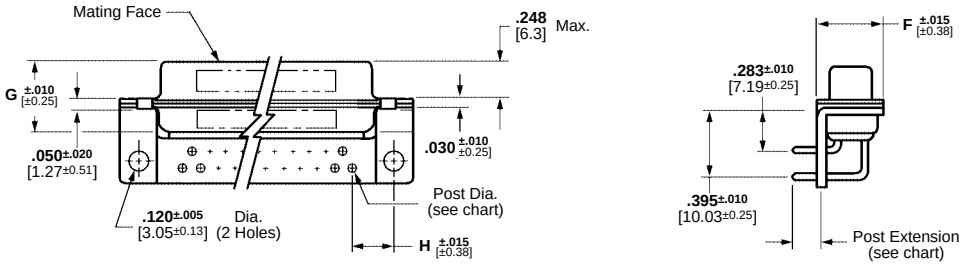

50 Positions

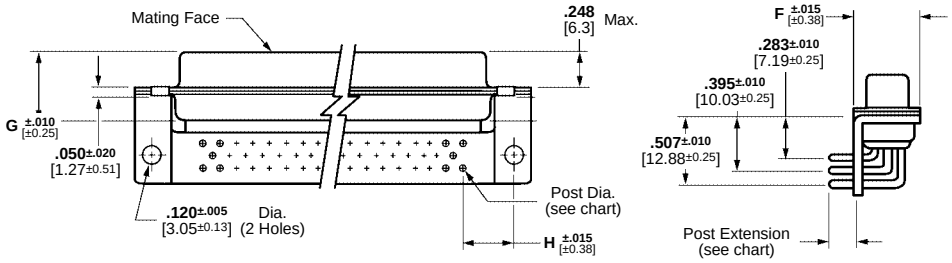

Plug Assemblies

Shell Size	No. Positions	Post Dia.	Post Ext. ±.020	Military Part Numbers M24308/	AMP Part Numbers
1	9	.030 0.76	.125 3.18	23-25F	1218434-1
2	15	.030 0.76	.125 3.18	23-26F	1218434-2
3	25	.030 0.76	.125 3.18	23-27F	1218434-3
4	37	.030 0.76	.125 3.18	23-28F	1218434-4
5	50	.030 0.76	.125 3.18	23-29F	1218434-5
1	9	.030 0.76	.156 3.96	23-31F	1218408-1
2	15	.030 0.76	.156 3.96	23-32F	1218408-2
3	25	.030 0.76	.156 3.96	23-33F	1218408-3
4	37	.030 0.76	.156 3.96	23-34F	1218408-4
5	50	.030 0.76	.156 3.96	23-35F	1218408-5
1	9	040 1.02	.125 3.18	23-37F	1218435-1
2	15	.040 1.02	.125 3.18	23-38F	1218435-2
3	25	.040 1.02	.125 3.18	23-39F	1218435-3
4	37	.040 1.02	.125 3.18	23-40F	1218435-4
5	50	.040 1.02	.125 3.18	23-41F	1218435-5

Receptacle Assemblies

Shell Size	No. Positions	Post Dia.	Post Ext. ±020	Military Part Numbers M24308/	AMP Part Numbers
1	9	.040 1.02	.156 3.96	23-43F	1218436-1
2	15	.040 1.02	.156 3.96	23-44F	1218436-2
3	25	040 1.02	.156 3.96	23-45F	1218436-3
4	37	.040 1.02	.156 3.96	23-46F	1218436-4
5	50	.040 1.02	.156 3.96	23-47F	1218436-5
1	9	.030 0.76	.188 4.78	23-49F	1218437-1
2	15	.030 0.76	.188 4.78	23-50F	1218437-2
3	25	.030 0.76	.188 4.78	23-51F	1218437-3
4	37	.030 0.76	.188 4.78	23-52F	1218437-4
5	50	.030 0.76	.188 4.78	23-53F	1218437-5
1	9	.040 1.02	.188 4.78	23-55F	1218438-1
2	15	.040 1.02	.188 4.78	23-56F	1218438-2
3	25	.040 1.02	.188 4.78	23-57F	1218438-3
4	37	.040 1.02	.188 4.78	23-58F	1218438-4
5	50	.040 1.02	.188 4.78	23-59F	1218438-5

Note: The suffix "F" on M24308 Part Numbers designates cadmium shell plating.

Products for Industrial & Commercial Applications

Dimensions are shown for reference purposes only.

Dimensions are in inches and millimeters unless otherwise specified. Values in brackets are metric equivalents.

Specifications subject to change.

Technical Support Center
1-800-522-6752
www.tycoelectronics.com

Crimp, Power / Coax / Signal / Combination, Series 109 Connectors

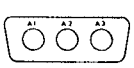

Shell Size	**2**
Contact Arrangement	**3C3[3]**
No. of Signal Contacts	**0**
No. of Coaxial/Power Contacts	**3**



Shell Size	**2**
Contact Arrangement	**11C1**
No. of Signal Contacts	**10**
No. of Coaxial/Power Contacts	**1**

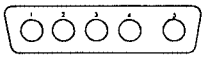

Shell Size	**3**
Contact Arrangement	**5C5**
No. of Signal Contacts	**0**
No. of Coaxial/Power Contacts	**5**



Shell Size	**3**
Contact Arrangement	**9C4**
No. of Signal Contacts	**5**
No. of Coaxial/Power Contacts	**4**

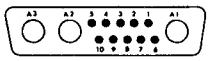

Shell Size	**3**
Contact Arrangement	**13C3**
No. of Signal Contacts	**10**
No. of Coaxial/Power Contacts	**3**

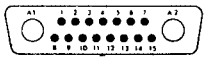

Shell Size	**3**
Contact Arrangement	**17C2**
No. of Signal Contacts	**15**
No. of Coaxial/Power Contacts	**2**

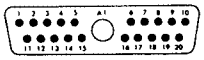

Shell Size	**3**
Contact Arrangement	**21C1**
No. of Signal Contacts	**20**
No. of Coaxial/Power Contacts	**1**

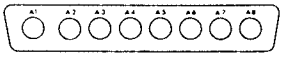

Shell Size	**4**
Contact Arrangement	**8C8**
No. of Signal Contacts	**0**
No. of Coaxial/Power Contacts	**8**



Shell Size	**4**
Contact Arrangement	**27C2**
No. of Signal Contacts	**25**
No. of Coaxial/Power Contacts	**2**

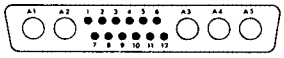

Shell Size	**4**
Contact Arrangement	**17C5**
No. of Signal Contacts	**12**
No. of Coaxial/Power Contacts	**5**



Shell Size	**4**
Contact Arrangement	**21C4**
No. of Signal Contacts	**17**
No. of Coaxial/Power Contacts	**4**

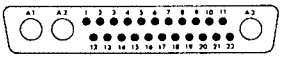

Shell Size	**4**
Contact Arrangement	**25C3**
No. of Signal Contacts	**22**
No. of Coaxial/Power Contacts	**3**

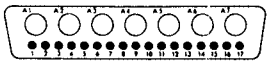

Shell Size	**5**
Contact Arrangement	**24C7**
No. of Signal Contacts	**17**
No. of Coaxial/Power Contacts	**7**

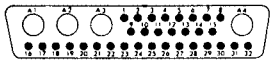

Shell Size	**5**
Contact Arrangement	**36C4**
No. of Signal Contacts	**32**
No. of Coaxial/Power Contacts	**4**

Material and Finish:

Shell—Steel or copper alloy

Plating—Cadmium, tin or gold

Insert—Approved material per MIL-C-24308

Retention Clips—Stainless steel or copper alloy

Contact Selection:

Standard:

Size 8 power: page 1101
Size 20 signal: page 1102

Insert Arrangement	Cad Plated Steel Shell (.120 Mounting Hole)		Tin Plated Steel Shell (.120 Mounting Hole)	
	Plug (Pin)	Receptacle (Socket)	Plug (Pin)	Receptacle (Socket)
3C3	448153-1	445705-4	448153-4	445705-1
11C1	211111-1	211112-1	211111-4	211112-4
5C5	212491-1	212059-1	212491-3	212059-3
9C4	212498-1	212502-1	212498-4	212502-5
13C3	208810-1	208811-1	208810-2	208811-2
17C2	212506-1	212510-1	212506-5	212510-4
21C1	212522-1	212526-1	212522-2	212526-2
8C8	446405-1	445730-1	446405-4	445730-5
27C2	212538-1	212542-1	212538-4	212542-4
17C5	212514-1	212518-1	212514-5	212518-5
21C4	212530-1	212534-1	212530-4	212534-4
25C3	208742-1	208551-1	208742-4	208551-4
24C7	208743-1	208552-1	208743-4	208552-4
36C4	208744-1	208550-1	208744-5	208550-4

Notes: [1] Plug insert arrangements shown. Receptacle arrangement is mirror image.
[2] Cable clamp/strain relief hardware cannot be used with these arrangements.
[3] The 3C3 arrangement can be mismated 180°. Consult Tyco Electronics for keyed part numbers.

Products for Industrial & Commercial Applications

Dimensions are shown for reference purposes only.

Dimensions are in inches and millimeters unless otherwise specified. Values in brackets are metric equivalents.

Specifications subject to change.

Technical Support Center
1-800-522-6752
www.tycoelectronics.com

Size 8 Contacts (Power) for Standard Density, Series 109 Power/Coax/ Signal Connectors

Crimp Contacts

Material and Finish:

Copper alloy, plated gold over nickel underplate

Retention Clips—Stainless steel or phosphor bronze

Note: clip may differ from view shown

Technical Documents:

Product Specification
108-10045 (current rating and wire size)

Hand Crimp Tool 608651-1
with positioner 608651-2

Extraction Tool
318813-1

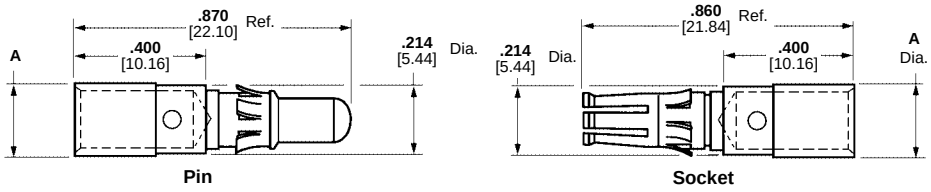

Pin **Socket**

Wire Size Range		Dimension A	Part Numbers	
AWG	mm²		Pin	Socket
8[2]	8	**.230** 5.84	211159-1	211161-1
10[2]	5	**.185** 4.69	211159-2	211161-2
12-14	2-3	**.150** 3.81	212007-1	212008-1
16-18	0.8-1.4	**.102** 2.59	212013-1	212014-1[1]

Notes: [1] 16-18 size use 608668-1 with Positioner 608668-2.
[2] Retention clip shown is for 12-14, 16-18 Awg. See AMP customer drawing for 8, 10 AWG Retention Clip.
[3] Use these contacts only with the **Standard** connectors on page 1100. Do not use with **Blindmate** connectors.

Printed Circuit Board Contacts

Right-Angle

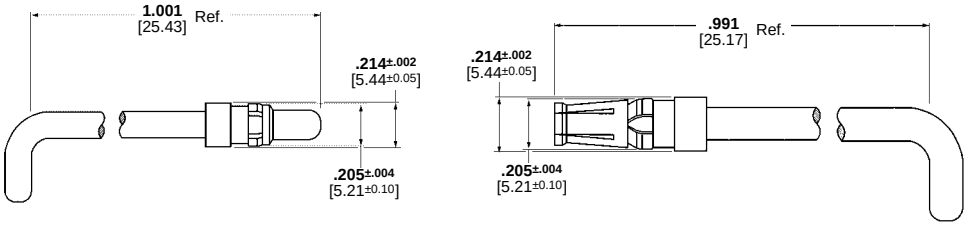

Pin
Part Number 213062-1[2]
213062-2[3]

Socket
Part Number 445548-1[2]
445548-2[3]

Vertical

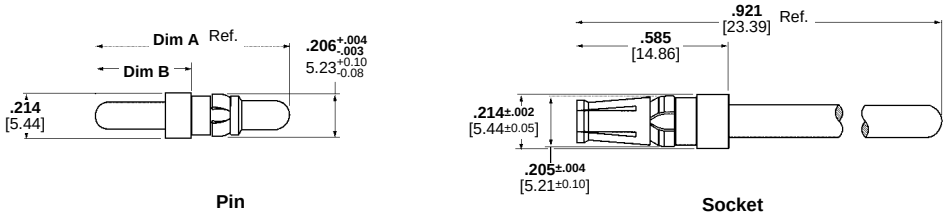

Pin
See Table

Socket
Part Number 445798-1[2]
445798-2[3]

Part Numbers	Dimension A	Dim B
449379-1	**.931** [23.65]	**.461** [11.71]
449379-2	**.845** [21.46]	**.375** [9.52]
1-449379-0[3]	**.931** [23.65]	**.461** [11.71]
1-449379-1[3]	**.845** [21.46]	**.375** [9.52]

Note: [1] Use these contacts only with the **Standard** connectors on page 1100. Do not use with **Blindmate** connectors.
[2] Standard Connector, .000050 [0.00127] gold plating.
[3] Standard Connector, .000030 [0.00076] gold plating.

Products for Industrial & Commercial Applications

Dimensions are shown for reference purposes only.

Dimensions are in inches and millimeters unless otherwise specified. Values in brackets are metric equivalents.

Specifications subject to change.

Technical Support Center
1-800-522-6752
www.tycoelectronics.com

Size 20 Crimp Contacts for Series 109 Connectors

Size 20 Crimp, Snap-In Contacts .040 [1.02] Pin Diameter

Material and Finish:

Pin and Socket body — Copper alloy, plated gold over nickel underplate

Socket Hood — Passivated stainless steel

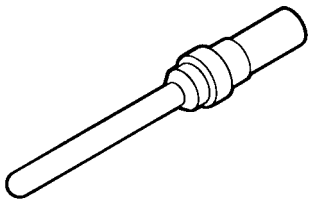

Pin
M39029/64-369
(Supersedes M24308/11-1)

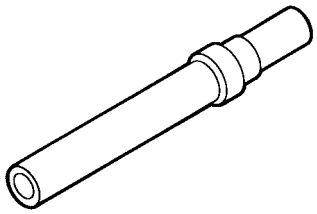

Socket
M39029/63-368
(Supersedes M24308/10-1)

Wire Size Range AWG	Wire Size Range [mm²]	Ins. Dia. (Max.)	Contact Configuration	Tape Mounted Contacts AMP Part Numbers	Loose Piece Contacts Military Part Numbers (M39029/)	Loose Piece Contacts AMP Part Numbers	Hand Tool Tool No. (M22520/)	Hand Tool Positioner No. (M22520/)	Contact Color Band
20-24	0.6-0.2	**.072** 1.83	Pin	205089-2	64-369	205089-1	02-01	02-08	orange, blue, white
			Socket	205090-2	63-368	205090-1	02-01	02-08	orange, blue, gray

[1] Tape mounted contacts are used in the AMP-TAPEMATIC Stripper/Crimper Machine Part Number **599406-7** (below).

Notes: [1] These contacts are used in Series 109 military connectors.
[2] Insertion/Extraction Tool Part Number **91067-2** (Military Part Number **M81969/1-02**) is used to install and remove pin and socket contacts.
[3] See AMP Instruction Sheet 408-7516 for wire length, tool and selector settings.
[4] Color bands are read in the direction of terminal (wire barrel) end to mating end.

Application Tools for MIL-C-39029 Contacts



Pin and Socket Insertion/Extraction Tool

Part Number 91067-2 or
MIL Number M81969/1-02
Insertion tip, for replacement
Part Number 126195-3
Extraction tip, for replacement
Part Number 126195-4



AMP-TAPEMATIC Stripper/ Crimper Machine Part Number
599406-7

Funnel Part Number 125905-1 **for Size 20 Contacts**

The AMP-TAPEMATIC Stripper/Crimper Machine strips wire and applies an 8-indent crimp termination per MIL-C-22520. The machine terminates pin and socket contacts which are tape mounted and reel fed. It offers production rates of up to 1200 finished leads per hour, provides overall lower applied costs and maintains a high degree of termination reliability.



Hand Crimping Tool
AMP Part Number 601966-1 **or**
MIL number M22520/2-01

Positioner
AMP Part Number 601966-5 **or**
MIL number M22520/2-08

This standard military-type hand tool terminates pins and sockets to wire with an 8-indent, M22520/2 crimp. It is ideally suited for prototype, field maintenance and other applications where volume production is not a factor.

Product Facts

- **Designed for both military and commercial applications**
- **Low engaging force is achieved by the manner in which Twist/Con Twist Pin Contacts are designed**
- **The metal shell and plastic shell are available with solder cup and solid or stranded wire terminations**
- **Mating force maximum is 10 oz. times the number of contacts**
- **Durability — No detrimental mechanical or electrical function of the connectors after 500 cycles of mating and unmating**
- **Current Rating — 3 amps max per contact**



MICRODOT Connectors MCK and MCD High Density Microminiature "D" Connectors described in this catalog comprise a complete connector system, which is adaptable to a numerous variety of form factors. Low engaging force is achieved by the manner in which the Twist/Con twist pin contacts are designed. By constructing the male contact as a breathing helical spring, electrical contact is achieved at many points around the periphery of the pin bundle rather than at a few discrete points, as in conventional pin designs. Normal twist pin engagement force is 6 ounces typically and 8 ounces maximum. The low force twist pins exhibit an engaging force of 4 oz. typically and 5 oz. maximum. Low force twist pins are standard in MIL-PRF-83513 configurations of MCK and MCD connectors and may be supplied as an option in all other configurations.

The MCK and MCD Series of connectors featured in this catalog are designed to meet the applicable requirements of MIL-PRF-83513, for intermateability, interchangeability, and performance. Designed for both military and commercial applications, the MCK's and MCD's are especially well suited for use in miniaturized airborne and space electronics, computers, and test equipment. The metal shell MCK's and plastic shell MCD's are available with solder cup, and solid or stranded wire terminations. MCK transition blocks are standard for printed circuit board mounting. Custom termination configurations for both MCK and MCD can be accommodated. Micro D's are also supplied in wired harness assemblies.

For complete product information, order Catalog 1308638

Product Facts

- **Designed for both military and commercial application**
- **Well suited for external conditions**
- **Precise contact alignment with extremely low engaging forces**
- **Product offering consist of metal shell, plastic shell, panel mount, printed circuit board and strip connectors**
- **Metal shell connector promotes high durability and reliability**



TWIST/CON High Density Microminiature Connectors described in this catalog comprise a complete contact system which is adaptable to a numerous variety of form factors. Precise contact alignment, with extremely low engaging forces, results from the manner in which the TWIST/CON contacts system is packaged — by constructing the male contact as a breathing helical spring, electrical contact is achieved at many points around the periphery of the pin bundle — instead of a few discrete points, as in conventional design.

Featured in this catalog is the TWIST/CON line, which accommodates roundwire and Flat Conductor Cable (FCC), Edgeboard Connectors.

Applications requiring frequent mating and disconnect call for the metal shell connector version. This style connector promotes high durability and reliability.

Designed for both military and commercial applications, this latest innovation is especially well suited to use in external conditions.

This catalog also features light weight plastic connectors in a strip (MCS) format as well as JACKMATE (MCJ) format for small package application requiring high reliability.

Edgeboard applications are covered in this catalog with a special High Density Standard Module (HDSM) Connector as well as MIL-C-55302 (MCEM) Connectors. The high mating forces of these larger connectors are greatly reduced with the use of the low force twist pins and sockets which are standard for this product line.

For complete product information, order Catalog 1308638

Products for Industrial & Commercial Applications

Dimensions are shown for reference purposes only.

Dimensions are in inches and millimeters unless otherwise specified. Values in brackets are metric equivalents.

Specifications subject to change.

Technical Support Center
1-800-522-6752
www.tycoelectronics.com

CHAMP .050 Series II Connectors

Series II Connectors for Shielded I/O Applications

Product Facts

- **Cable plug connectors terminate 28–30 AWG [.08–.09 mm²] wire**
- **180° cable exit**
- **PC board mounting receptacle connectors with rugged zinc die cast body and stamped metal shield**
- **Double-spring contact design to ensure intermateability and conformance to standards**
- **14 through 100 selected positions available**

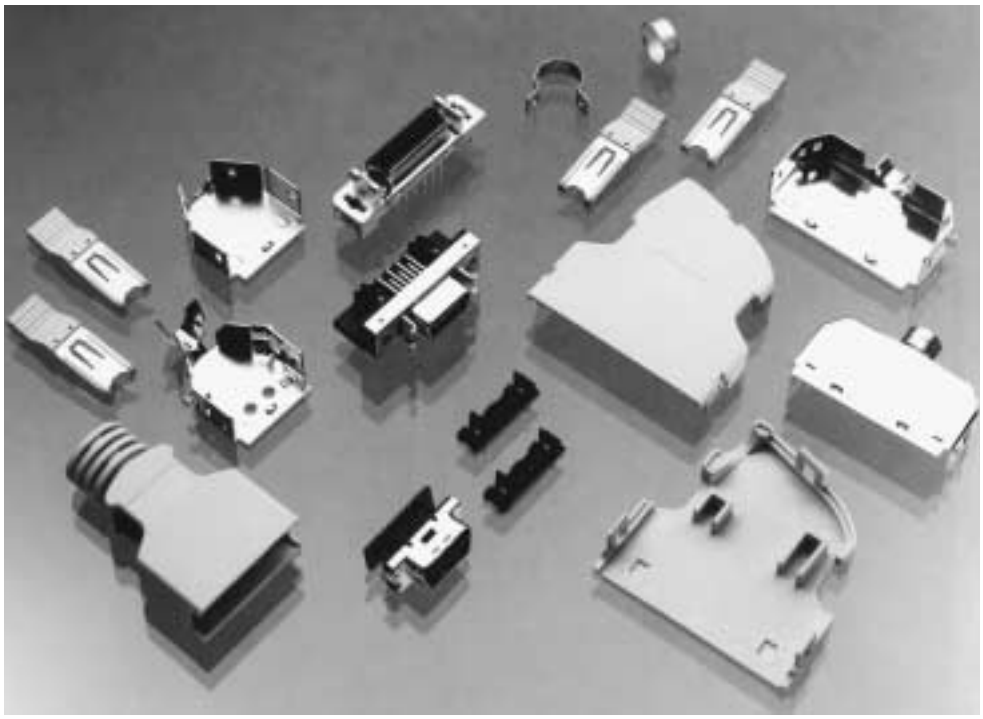

Performance Specifications:

Series II Connector:

Operating Temperature Range — –55°C to +85°C for Standard
–55°C to +105°C for High Temp

Current Rating — 1 Ampere Maximum—28 AWG [0.08 mm²]

Voltage Rating — 250 VAC Maximum

Termination Resistance — 35 Milliohms Maximum Initial

Insulation Resistance — 500 Megohms Minimum Initial

Mating Force — 75 Grams Maximum Per Contact

Rated Cycle Life — 500 Cycles

Technical Documents:

Product Specification
102-5288

Application Specifications
114-5166 — Integral Cable Clamp
114-5124 — Wire Terminations

For complete product information, order Catalog 82244

Products for Industrial & Commercial Applications
Dimensions are shown for reference purposes only.
Dimensions are in inches and millimeters unless otherwise specified. Values in brackets are metric equivalents.
Specifications subject to change.
Technical Support Center
1-800-522-6752
www.tycoelectronics.com

CHAMP .050 Series II Connectors

Plug Cable Connectors

Materials and Finish:

Housing, Covers — Glass-filled PBT, rated 94V-0, black

Contacts — Phosphor bronze, selectively plated with minimum of .000030 [0.00076] gold in mating area and tin-lead in termination area

Performance Specifications — Page 1105

Wire Accommodation — 28 AWG [0.08mm²] 7 Strand with .020–.028 [0.51–0.71]* insulation diameter. Most UL Type 2789 wires meet these dimensional requirements

*Depending on type of insulation and applicator tooling.

Mating Receptacle Connectors — Right-Angle — Page 1108
Vertical — Page 1108

Technical Documents:

Product Specification
108-5288

Application Specification
114-5166 — integral clamp
114-5124 — wire terminations

Recommended Cable

Montrose/CDT —
Part Number CBL-7334
Phone: 1-800-346-6626

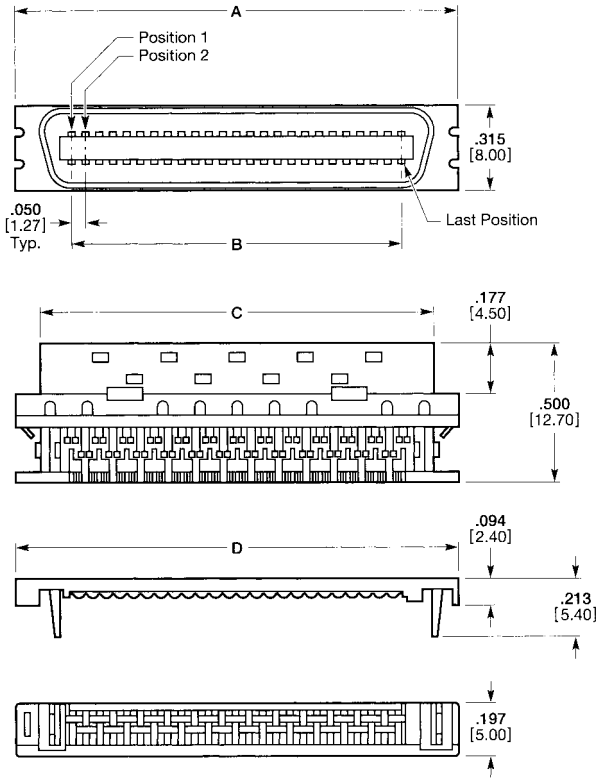

No. of Positions	Dimensions				Part Numbers 28 AWG [0.08mm²]
	A	B	C	D	
26	**1.024** 26.00	**.600** 15.24	**.843** 21.40	**1.020** 25.90	2-175677-4
36	**1.276** 32.40	**.850** 21.59	**1.091** 27.70	**1.272** 32.30	2-175677-5
50	**1.626** 41.30	**1.200** 30.48	**1.441** 36.60	**1.622** 41.20	2-175677-7
68	**2.075** 52.70	**1.650** 41.91	**1.890** 48.00	**2.071** 52.60	2-175677-8
80	**2.374** 60.30	**2.450** 62.23	**2.693** 68.40	**2.870** 72.90	3-175677-0
100	**2.874** 73.00	**1.950** 49.53	**2.193** 55.70	**2.370** 60.20	2-175677-9

For complete product information, order Catalog 82244

Products for Industrial & Commercial Applications
Dimensions are shown for reference purposes only.
Dimensions are in inches and millimeters unless otherwise specified. Values in brackets are metric equivalents.
Specifications subject to change.
Technical Support Center
1-800-522-6752
www.tycoelectronics.com

CHAMP .050 Series II Connectors

Enclosure Kits

Materials and Finish:

Enclosure — PBT, rated 94V-0, beige white (other colors available, contact Tyco Electronics)

Shields — Steel, plated nickel over copper underplating

Locking Spring — Stainless steel, overmolded with PBT, rated UL 94V-0, beige white

Performance Specifications — Page 1105

Cable Connectors — Plug — Page 1106

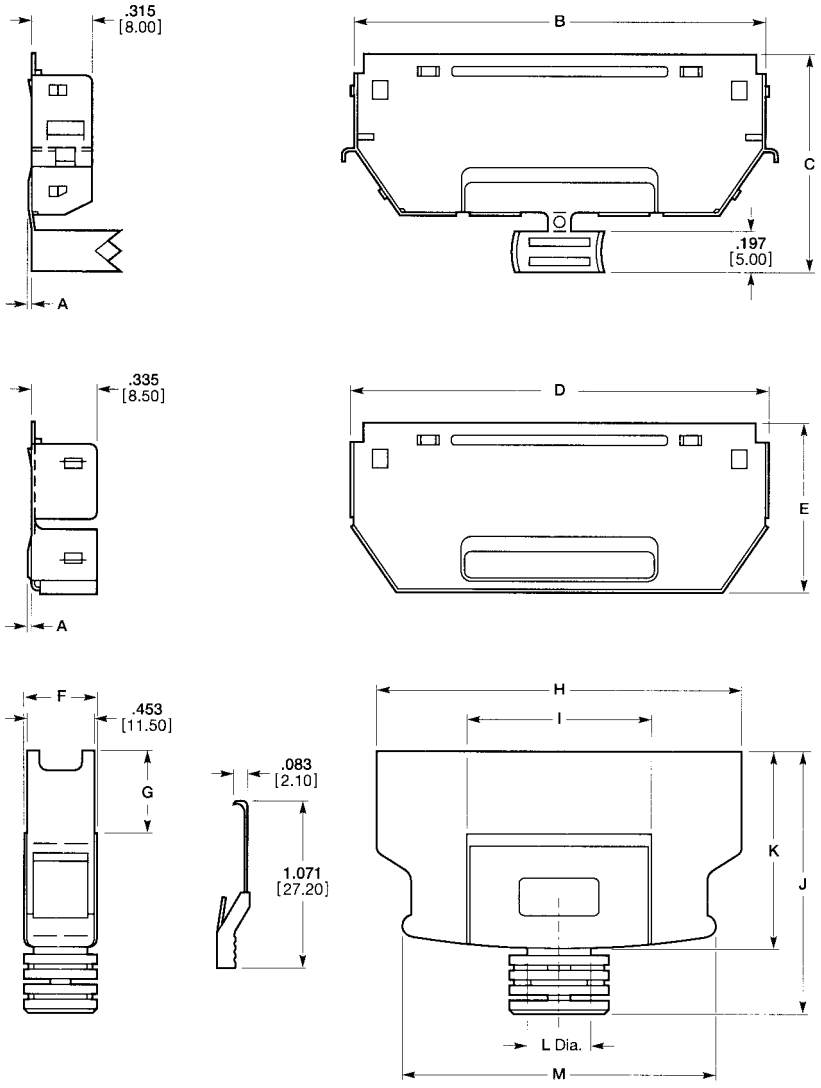

No. of Positions	Cable Dia.	Dimensions													Part Numbers
		A	B	C	D	E	F	G	H	I	J	K	L	M	
26	**.232–.272** 5.89–6.91	—	**1.083** 27.51	**1.102** 28.00	**1.134** 28.80	**.866** 22.00	**.453** 11.51	—	**1.317** 33.46	**.512** 13.00	**1.654** 42.00	**1.260** 32.00	**.280** 7.10	**0.975** 24.76	176793-4
36	**.252–.311** 6.40–7.90	—	**1.333** 33.86	**1.102** 28.00	**1.384** 35.15	**.866** 22.00	**.453** 11.51	—	**1.567** 39.80	**.512** 13.00	**1.654** 42.00	**1.260** 32.00	**.319** 8.10	**1.225** 31.11	176793-5
50	**2.83–.335** 7.18–8.51	—	**1.683** 42.75	**1.102** 28.00	**1.734** 44.04	**.866** 22.00	**.453** 11.51	—	**1.917** 48.69	**.512** 13.00	**1.654** 42.00	**1.260** 32.00	**.343** 8.70	**1.575** 40.00	176793-7
68	**.319–.378** 8.10–9.60	**.024** 0.60	**2.133** 54.18	**1.102** 28.00	**2.184** 55.47	**.866** 22.00	**.472** 12.00	**.563** 14.30	**2.367** 60.12	**1.181** 30.00	**1.654** 42.00	**1.260** 32.00	**.386** 9.80	**2.025** 51.43	176793-8
80	**.335–.401** 8.51–10.19	**.024** 0.60	**2.433** 61.80	**1.220** 31.00	**2.484** 63.09	**.984** 25.00	**.465** 11.80	**.614** 15.60	**2.667** 67.74	**1.338** 34.00	**1.772** 45.00	**1.378** 35.00	**.406** 10.30	**2.325** 59.05	1-176793-0
100	**.390–.433** 9.91–11.00	**.051** 1.30	**2.933** 74.50	**1.299** 33.00	**2.984** 75.79	**1.063** 27.00	**.531** 13.50	**.492** 12.50	**3.167** 80.44	**1.496** 38.00	**1.850** 47.00	**1.457** 37.01	**.441** 11.20	**2.825** 71.75	176793-9

For complete product information, order Catalog 82244

Products for Industrial & Commercial Applications
Dimensions are shown for reference purposes only.
Dimensions are in inches and millimeters unless otherwise specified. Values in brackets are metric equivalents.
Specifications subject to change.
Technical Support Center
1-800-522-6752
www.tycoelectronics.com

CHAMP .050 Series II Connectors

Right-Angle Receptacles, with Boardlocks

Materials and Finish:

Housing — Glass-filled nylon, rated 94V-0, black

Contacts — Phosphor bronze, selectively plated with minimum of .000030 [0.00076] gold in mating area and tin-lead in solder tail area

Retention Leg (Boardlock) — Phosphor bronze, tin-lead over nickel underplate

Shield — Steel, nickel plated over copper underplate

Frame — Die cast zinc, nickel plated

Performance Specifications — Page 1105

PC Board Accommodation — .062 [1.60]–.093 [2.36] nominal thickness

Panel Accommodation — .079 [2.00] maximum thickness

Mating Plug Connectors — Cable — Page 1106

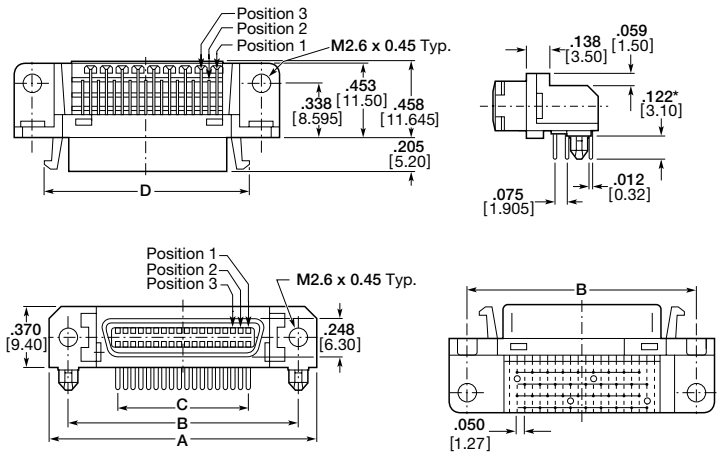

No. of Positions	Dimensions					Part Numbers
	A	B	C	D	E	
26	**.600** 15.24	**1.231** 31.26	**.797** 20.24	**1.073** 27.26	**1.463** 37.16	917738-4
36	**.850** 21.59	**1.481** 37.61	**1.047** 26.59	**1.323** 33.61	**1.713** 43.51	917738-5 1-917738-5
50	**1.200** 30.48	**1.831** 46.50	**1.397** 35.48	**1.673** 42.50	**2.063** 52.40	917738-7 1-917738-7
68	**2.513** 63.83	**2.281** 57.93	**1.650** 41.91	**2.123** 53.93	**2.134** 54.20	2-178238-8
80	**2.813** 71.45	**2.581** 65.55	**1.950** 49.53	**2.423** 61.55	**2.437** 61.90	3-178238-0
100	**3.313** 84.15	**3.081** 78.25	**2.450** 62.23	**2.923** 74.25	**2.937** 74.60	2-178238-9

*Alternate tail lengths: .153 [3.90] and .087 [2.20] available.

Vertical Receptacle

Materials and Finish:

Housing — Glass-filled nylon, rated 94V-0, black

Contacts — Phosphor bronze, selectively plated with minimum of .000030 [0.00076] gold in mating area and tin-lead in solder tail area

Shield — Steel, plated nickel over copper underplate

Frame — Die cast zinc, plated nickel over copper underplate

Performance Specifications — Page 1105

PC Board Accommodation — .062 [1.60]–.093 [2.40] nominal thickness

Panel Accommodation — .079 [2.0] maximum thickness

Mating Plug Connectors — Cable — Page 1106

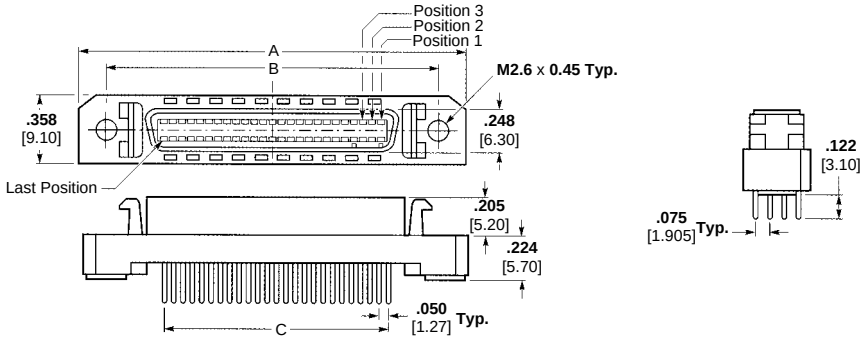

No. of Positions	Dimensions				Part Numbers
	A	B	C	D	
26	**1.463** 37.16	**1.231** 31.26	**0.600** 15.24	**1.087** 27.60	2-175887-4
36	**1.713** 43.51	**1.481** 37.61	**0.850** 21.59	**1.335** 33.90	2-175887-5
50	**2.063** 52.40	**1.831** 46.50	**1.200** 30.48	**1.685** 42.80	2-175887-7
68	**2.513** 63.83	**2.281** 57.93	**1.650** 41.91	**2.134** 54.20	2-175887-8
80	**2.813** 71.45	**2.581** 65.55	**1.950** 49.53	**2.437** 61.90	3-175887-0
100	**3.313** 84.15	**3.081** 78.25	**2.450** 62.23	**2.937** 74.60	2-175887-9

For complete product information, order Catalog 82244

Products for Industrial & Commercial Applications
Dimensions are shown for reference purposes only.
Dimensions are in inches and millimeters unless otherwise specified. Values in brackets are metric equivalents.
Specifications subject to change.
Technical Support Center
1-800-522-6752
www.tycoelectronics.com

CHAMP .050 Series II Connectors

Discrete Wire Application Tooling

For Terminating Cable to Series II Plug Connectors
(Base Part Number 175677**)**
(for low to medium volume production)

CHAMPOMATOR 2.5 Terminating Machine
Part Number 354786-6
(less accessories)Controller
Part Number
852423-1 **(USA/120 VAC)**
852423-3 **(Europe/230 VAC)**

Accessories available separately; contact sales engineer or Technical Support Center 1-800-522-6752.

Series II Tooling Package
Part Number 768900-5

Instruction Sheet — 408-4054
Connector Size — 14 through 100

Hand Applicator, Series II
Part Number 911123-1

Connector Sizes — 14 through 50 positions
Instruction Sheet — 411-5389

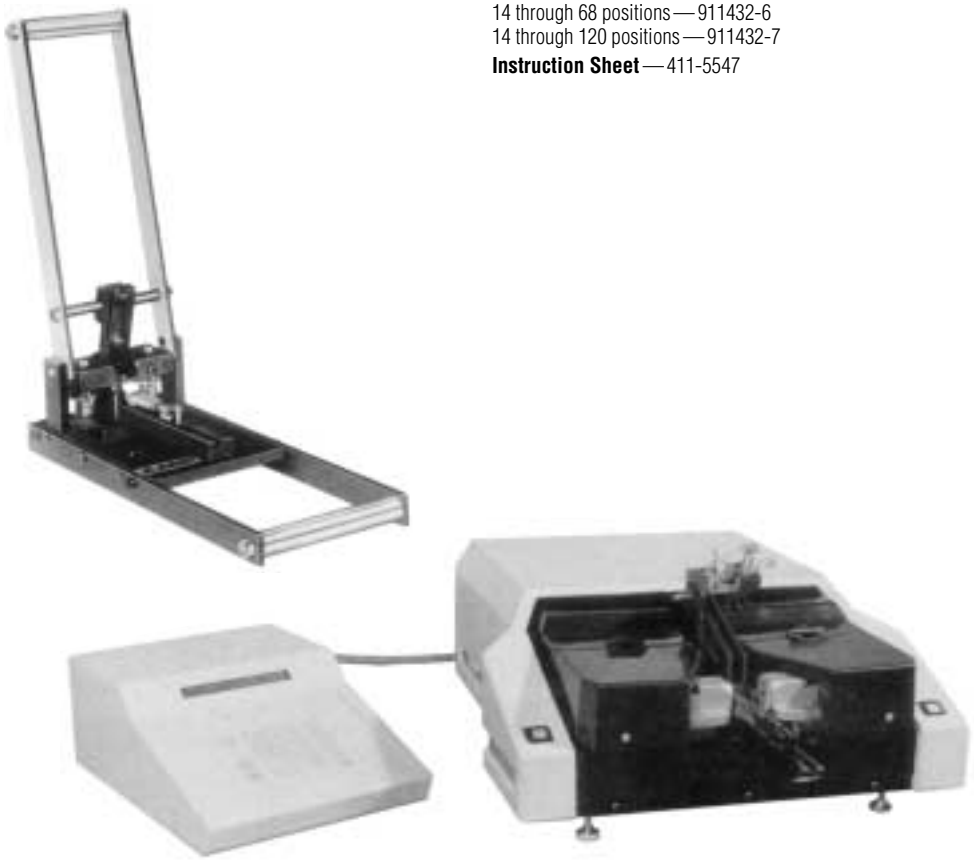

Arbor Tool & Tooling Package

Connector Sizes —
14 through 68 positions — 911149-6
14 through 120 positions — 911149-7

Extra Lacing Stations available. Order Wire Comb Kit
14 through 68 positions — 911432-6
14 through 120 positions — 911432-7

Instruction Sheet — 411-5547

For Crimping Integral Ferrules of Enclosure Kits
(Base Part Number 176793**)**

Toggle Bench Tool
Part Number 919620-1

Instruction Sheet — 411-5628

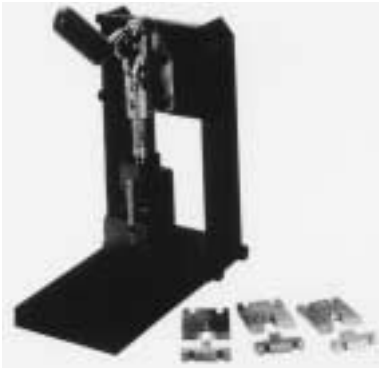

Manual Arbor Tool
Part Number 915697-2

Instruction Sheet — 411-5558



For complete product information, order Catalog 82244

Products for Industrial & Commercial Applications
Dimensions are shown for reference purposes only.
Dimensions are in inches and millimeters unless otherwise specified. Values in brackets are metric equivalents.
Specifications subject to change.
Technical Support Center 1-800-522-6752 www.tycoelectronics.com

CHAMP IDC Cable Connectors

Product Facts

- **Wide wire range**
- **Connectors available in 14, 24, 36, 50 and 64 positions with a choice of mounting methods: screw lock type, bail lock type and locking latch type**
- **Self-extinguishing thermoplastic housings and accessories**
- **Contacts on .085 [2.16] centers in dual position arrangements**
- **Optional dust covers and snap-on strain relief covers**



CHAMP Insulation Displacement Concept (IDC) Connectors provide a low cost method of terminating unstripped solid or stranded copper wires and cables to connectors. Application for the CHAMP IDC Connectors are widely diversified and are designed for specific field and industrial applications.

Connectors and Housing

Plug and receptacle connectors are furnished pre-loaded with contacts on .085 [2.16] centers. Connectors are available in 14, 24, 36, 50 and 64 positions, in standard black housings and molded from self-extinguishing plastic material for high impact and dielectric strength. Housing material is rated at an Oxygen Index Rating of 28% minimum.

Terminals

The terminal is precision formed of high conductivity, high strength copper alloy with 30 microinch gold minimum over 50 microinch nickel plating in contact area. The wire terminating area (rear of terminal) is stamped like a slotted reversed "U" and each leg contains a wire slot and strain relief slot with precisely controlled dimensions.

Wire Range and Types

The terminal is designed to accept 26-22 AWG [0.4-0.64 mm] solid wire and 28-22 AWG [0.08-0.4 mm^2] stranded wire (7 strands). The terminal is designed to accommodate most types of insulation—PVC, polyethylene, irradiated polyethylene and polypropylene.

Covers and Strain Relief

Several types of accessories are available to complete the connector assembly and to provide strain relief and protection. Made of high impact strength thermoplastic materials, all covers and strain relief have inner ribs that confine each wire in the wire termination slots.

Testing

Extensive testing, both laboratory and actual application have been conducted on this entire product line. These tests included heat aging, temperature cycling as well as shock and vibration. Both electrical and mechanical test results have met or exceeded performance objectives and copies of these test results are available from Tyco Electronics.

Applicator Tooling

Since your specific application will determine the degree of tooling required, consult pages 1134 thru 1136 in the application tooling section.

Products for Industrial & Commercial Applications
Dimensions are shown for reference purposes only.
Dimensions are in inches and millimeters unless otherwise specified. Values in brackets are metric equivalents.
Specifications subject to change.
Technical Support Center
1-800-522-6752
www.tycoelectronics.com

CHAMP IDC Cable Connectors

Plug

Style PS—Plug, Screw Lock (Thick Flange)[1]

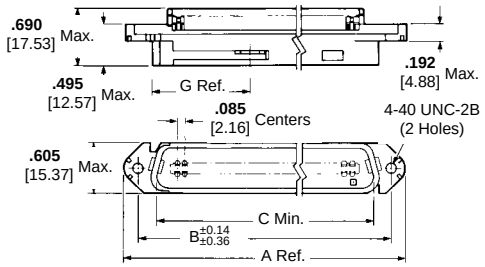

Style PB—Plug, Bail Lock

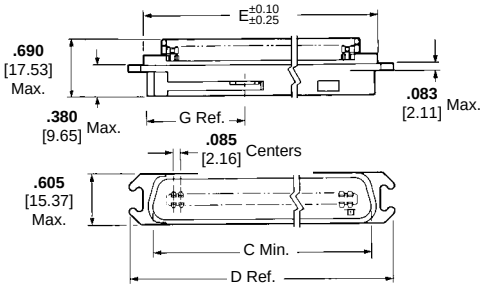

Receptacle

Style RS—Receptacle, Screw or Bail Lock (Thick Flange)[1]

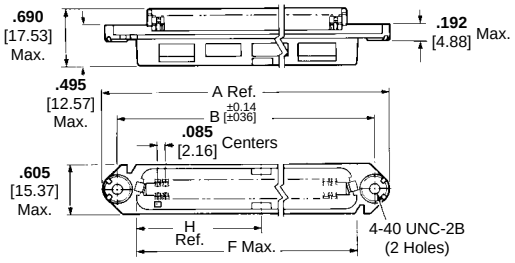

[1] Thick flange connectors are typically for cable-to-cable screw lock applications.

Style RP—Receptacle, Panel Mount, Screw or Bail Lock (Thin Flange)[2]

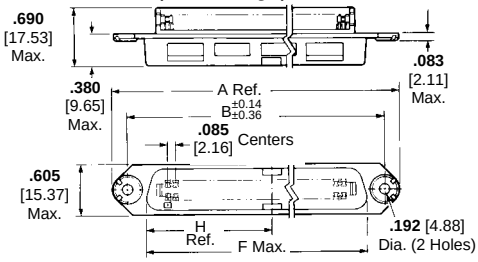

[2] Thin flange connectors are typically for panel mount applications.

Color Code	Letter Code	Wire Range (AWG)
Blue	B	(1) 24-26 Solid or 24 Stranded
Green	C	(1) 22 Solid or Stranded
Yellow	E	(1) 26, 27 or 28 Stranded

No. of Positions	Dimensions							
	A	B	C	D	E	F	G	H
14	**1.750** 44.45	**1.416** 35.97	**1.001** 25.43	**1.526** 38.76	**1.196** 30.38	**1.000** 25.40	**.644** 16.36	**.401** 10.19
24	**2.175** 55.25	**1.842** 46.79	**1.426** 36.22	**1.951** 49.56	**1.621** 41.17	**1.425** 36.20	**.646** 16.41	**.825** 20.96
36	**2.685** 68.20	**2.352** 59.74	**1.936** 49.17	**2.462** 62.53	**2.132** 54.15	**1.935** 49.15	**1.118** 28.40	**.854** 21.69
50	**3.280** 83.31	**2.946** 74.83	**2.531** 64.29	**3.056** 77.62	**2.726** 69.24	**2.530** 64.26	**1.123** 28.52	**1.461** 37.11
64	**3.875** 98.43	**3.542** 89.97	**3.126** 79.40	**3.651** 92.74	**3.321** 84.35	**3.125** 79.38	**1.608** 40.84	**1.562** 39.67

Note: These dimensions apply to all mating faces of all types of CHAMP Connectors.

No. of Positions	Wire Size				Housing Color Dot Des.	Contact Letter Code	Part Numbers			
	Solid		7 Strand				Plug		Receptacle	
	AWG	mm	AWG	mm²			Style PS	Style PB	Stype RS	Style RP
24	22	0.65	22	0.40	Green	C	552301-1	552317-1	552305-1	—
36							—	552318-1	—	—
50							552173-1	552319-1	552064-1	—
64							552303-1	—	552307-1	—
14	24-26	0.51-0.40	24	0.20	Blue	B	552282-1	552270-1	552312-1	2-552271-1
24							552283-1	552272-1	552313-1	2-552273-1
36							552284-1	552274-1	552314-1	2-552275-1
50							229974-1	552032-1	229975-1	2-552001-1
64							552285-1	552276-1	552315-1	2-552277-1
50	—	—	26-27-28	0.09	Yellow	E	552390-1	552471-1	552391-1	2-552476-1
64							552488-1	—	—	—

Notes: 1. A panel mount 50 position plug connector is available in thin flange with .187 [4.75] diameter mounting hole, **Part Number** 552686-1, which has B slot contacts.
2. Style RP is not compatible with integral locking latch receptacle. For thin flange panel mount plug connectors all standard mounting hardware may be utilized with the exception of bail lock mounting hardware.
3. Acceptable conductor insulations are polyvinyl chloride (PVC), polyethylene, irradiated polyethylene, polypropylene and TEFLON. **Maximum insulation diameter .045 [1.14] for tools that mass terminate conductors on one side at a time. For tools that insert one conductor per side at a time, .043 [1.09] insulation diameter is the maximum.** As a rule, harder insulations require smaller conductor insulation diameters.

Products for Industrial & Commercial Applications
Dimensions are shown for reference purposes only.
Dimensions are in inches and millimeters unless otherwise specified. Values in brackets are metric equivalents.
Specifications subject to change.
Technical Support Center
1-800-522-6752
www.tycoelectronics.com

CHAMP IDC Cable Connectors

Large Insulation Wire Connectors

Miniature Ribbon IDC Connectors that can accommodate 22 AWG wire with insulation diameters up to .056 [1.42]. The F-slot contacts handle large insulation diameter conductors using a folded beam contact design.

Only connector supplied.
180° Cover and Cable shown for reference

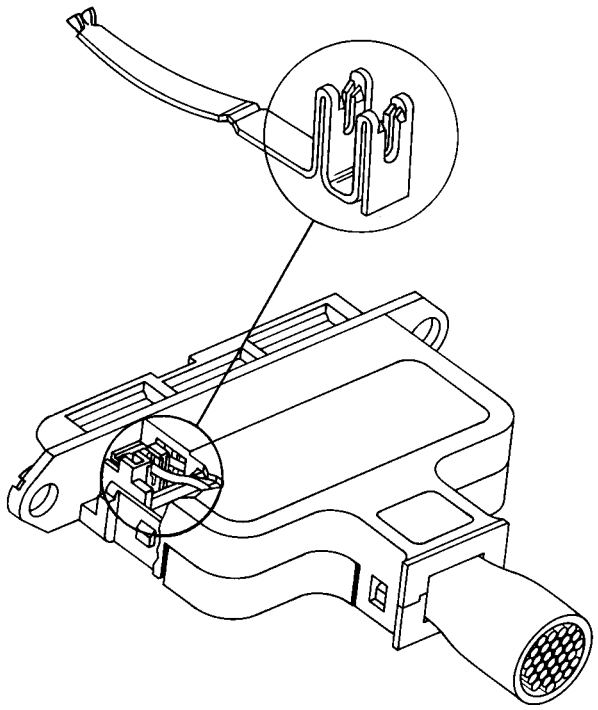

No. of Positions	Wire Size				Housing Color Dot Description	Part Numbers			
	Solid		7 Strand			Plug		Receptacle	
	AWG	mm	AWG	mm²		Style PS	Style PB	Style RS	Style RP
50	22	0.64	22	0.40	Brown	556039-1	—	555227-1	—
64						556409-1	555753-1	—	555151-1

Integral Locking Latch Receptacle

These special CHAMP connectors are designed with an integral latching system that eliminates the need for additional locking hardware. Receptacle assemblies are preassembled with two plated steel spring latches (one at each end) that latch into cutout slots in mating plug connectors. To release a mated pair, simply depress latches into recessed areas and disengage. Note, however, that integral latches are not repairable nor replaceable. Integral-latch connectors are presently available in 50 and 64 position sizes.

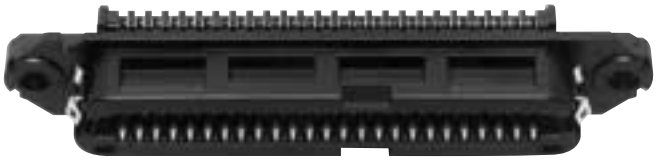

No. of Positions	Housing Color Dot Des.	Contact Letter Code	Part Numbers
50	Blue	B	553921-1
64			554381-2

Products for Industrial & Commercial Applications
Dimensions are shown for reference purposes only.
Dimensions are in inches and millimeters unless otherwise specified. Values in brackets are metric equivalents.
Specifications subject to change.
Technical Support Center
1-800-522-6752
www.tycoelectronics.com

Cable-to-Cable Applications for 50 Position Connector Kits

Cable-to-Cable Plug and Receptacle with Tapered Cover and Screw



Wire Size				Housing Color Dot Des.	Contact Letter Code	Cable Diameter Range	Dust Cover	Kit Part Numbers			
Solid		7 Strand						Plug		Receptacle	
AWG	mm	AWG	mm²					Black	Gray	Black	Gray
22	0.64	22	0.4	Green	C	Up to **.550** 13.97	No	552382-1	—	552383-1	—
24-26	0.51-0.40	24	0.20	Blue	B	**.350-.425** 8.89-10.80	No	229912-1	229912-4	229913-1	229913-4
							No	*6-229912-1	—	*6-229913-1	—
							Yes	1-229912-1	1-229912-4	1-229913-1	—
							Yes	*6-229912-3	*6-229912-4	*6-229913-3	—
						.425-.500 10.80-12.70	No	2-229912-1	—	—	—
							Yes	3-229912-1	—	3-229913-1	—
—	—	26, 27, 28	0.14-0.10, 0.09	Yellow	E	**.350-.425** 8.26-10.80	No	552402-1	—	—	—

***Note:** Part Numbers with prefix of "6" are bulk packed in quantities of 500.

Cable-to-Cable Hardware Kits



Bent Bail Lock Hardware Kit
Part Number 552561-4
(For use with 90° Strain Relief Cover— One kit required per assembly)

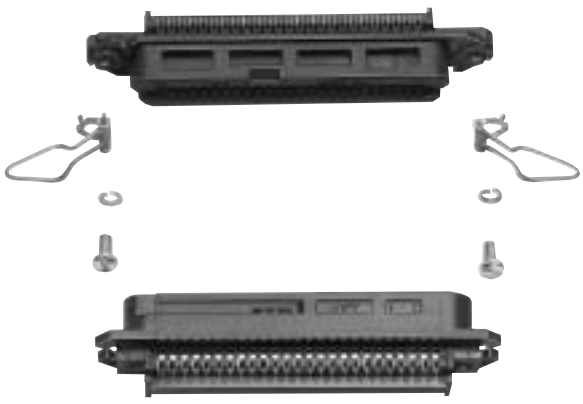



CHAMP-LOK Connector Hardware Kit
(One locking latch required per assembly)
Part Number 552723-3 **(64 Position Locking Latch)**

Notes: Only fastening hardware supplied, other items shown for reference purposes.

Cable-to-Cable Accessories

90° Snap-On Strain Relief Cover

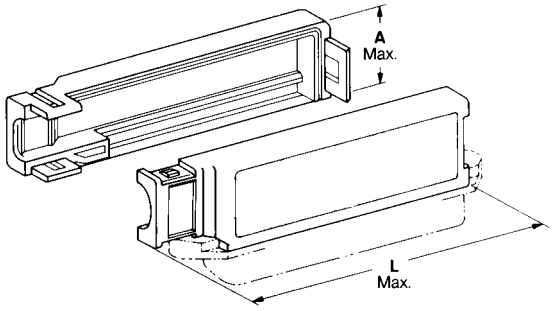

No. of Positions	Dimensions A	Dimensions L	Cable Range Diameter*	Part Numbers
14	**.684** 17.37	**1.863** 47.32	**.185-.230** 4.70-5.84	552412-1
			.250-.300 6.35-7.62	1-552412-1
24	**.684** 17.37	**2.288** 58.12	**.250-.300** 6.35-7.62	552413-1
			.305-.360 7.75-9.14	1-552413-1
36	**.684** 17.37	**2.798** 71.07	**.330-.380** 8.38-9.65	3-552414-1
50	**.684** 17.37	**3.388** 86.06	**.340-.400** 8.64-10.16	552014-1
	.922 23.42	**3.388** 86.06	**.315-.415** 8.00-10.54	1-552011-1
			.415-.465 10.54-11.81	552011-1
	1.127 28.63	**3.590** 91.19	**.475-.540** 12.07-13.72	552731-1
64	**1.127** 28.63	**4.183** 106.25	**.410-.475** 10.41-12.07	552496-1
			.475-.540 12.07-13.72	1-552496-1
			.540-.605 13.72-15.37	2-552496-1

*Strain relief cover cable diameter range is a guideline. The appropriate strain relief cover depends on cable stiffness, cable packing and fillers.

180° Snap-On Strain Relief Cover

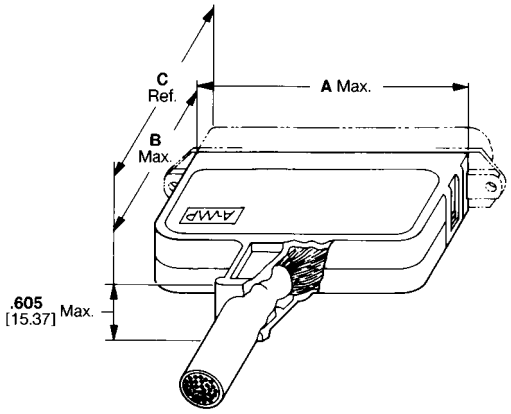

No. of Positions	Dimensions A	Dimensions B	Dimensions C	Cable Range Diameter*	Part Numbers
14	**.994** 25.25	**1.455** 36.96	**1.824** 46.33	**.175-.220** 4.45-5.59	552079-1
				.220-.265 5.59-6.73	1-552079-1
				.265-.310 6.73-7.87	2-552079-1
24	**1.419** 36.04	**1.455** 36.96	**1.824** 46.33	**.230-.280** 5.84-7.11	552076-1
				.280-.320 7.11-8.13	1-552076-1
				.320-.380 8.13-9.65	2-552076-1
36	**1.934** 49.12	**1.455** 36.96	**1.824** 46.33	**.290-.360** 7.37-9.14	552073-1
				.360-.430 9.14-10.92	552073-5
				.430-.500 10.92-12.70	552073-6
50	**2.520** 64.01	**1.555** 39.50	**1.924** 48.87	**.330-.380** 8.38-9.65	3-552008-1
				.380-.430 9.65-10.92	2-552008-1
				.430-.490 10.92-12.45	552008-1
				.480-.550 12.19-13.97	4-552008-1
				.430-.500 10.92-12.70	552003-1[1]
64	**3.119** 79.22	**1.655** 42.04	**2.024** 51.41	**.480-.540** 12.19-13.72	552082-1

[1] With probe holes.

Dust Cover

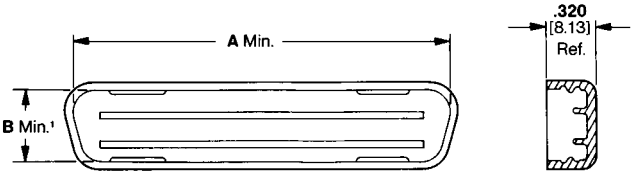

No. of Positions	Plug Cover (Blue) A	Plug Cover (Blue) Part Numbers	Receptacle Cover (Red) A	Receptacle Cover (Red) Part Numbers
24	**1.575** 40.01	—	**1.421** 36.09	229969-4
36	**2.085** 52.96	229968-3	**1.931** 49.05	229969-3
50	**2.700** 68.58	229968-1	**2.526** 64.16	229969-1
64	**3.275** 83.19	229968-2	**3.121** 79.27	229969-2

[1] B Dimension—.610 [15.49]
Plug and .478 [12.14] Receptacles

Products for Industrial & Commercial Applications
Dimensions are shown for reference purposes only.
Dimensions are in inches and millimeters unless otherwise specified. Values in brackets are metric equivalents.
Specifications subject to change.
Technical Support Center
1-800-522-6752
www.tycoelectronics.com

Cable-to-Cable Accessories

90° Standard Slide-On Strain Relief Cover Kit (for 50 Position Only)

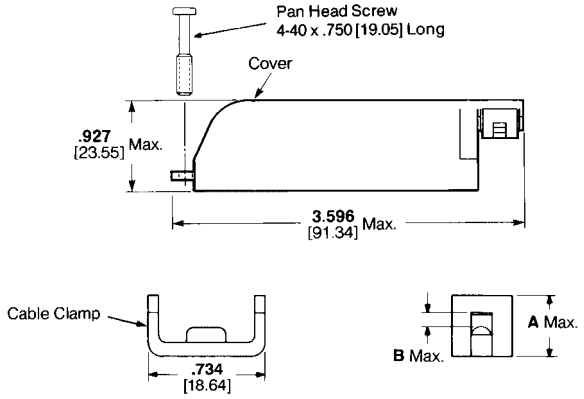

90° Tapered Slide-On Strain Relief Cover Kit (for 50 Position Only)

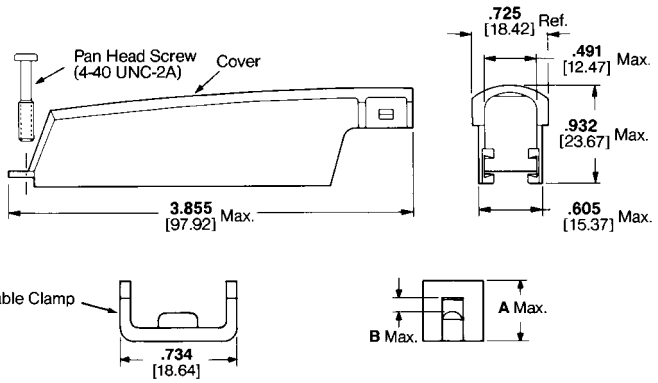

Cable Range Diameter	Dimensions		Kit Part Numbers		Component Part Numbers			
	A	B	Standard Cover	Tapered Cover	Cable Clamp	Screw	90° Tapered Cover	90° Slide-On Cover
.425-.500 10.80-12.70	**.475** 12.07	**.202** 5.13	552960-1	552560-5	1-229910-1	229911-1	229909-1	552617-1
.350-.425 8.89-10.80	**.380** 9.65	**.107** 2.72	552960-2	552560-1	229910-1	229911-1	229909-1	552617-1
.500-.550 12.70-13.97	**.540** 13.72	**.267** 6.78	552960-5	—	4-229910-1	229911-1	229909-1	552617-1

Cable-to-Panel Accessories

Style RP—Receptacle, Panel Mount, Screw or Bail Lock (Thin Flange)

Note: See page 1111 for Style RP part numbers.

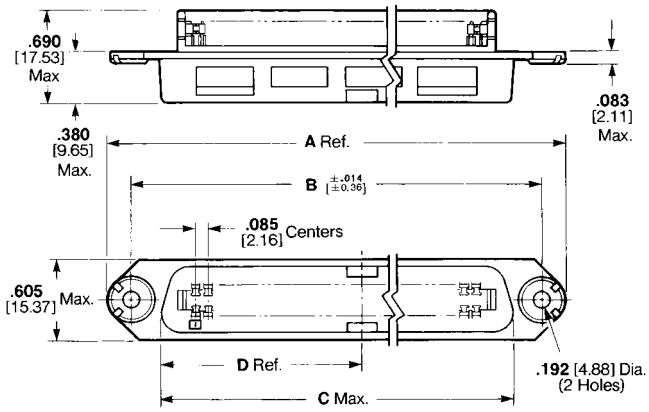

No. of Positions	Dimensions			
	A	B	C	D
14	**1.750** 44.45	**1.416** 35.97	**1.000** 25.40	**.401** 10.19
24	**2.175** 55.25	**1.842** 46.79	**1.425** 36.20	**.825** 20.96
36	**2.685** 68.20	**2.352** 59.74	**1.935** 49.15	**.854** 21.69
50	**3.280** 83.31	**2.946** 74.83	**2.530** 64.26	**1.461** 37.11
64	**3.875** 98.43	**3.542** 89.97	**3.125** 79.38	**1.562** 39.67

Snap-On Strain Relief

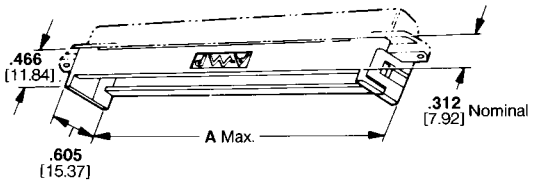

Note: Two required per connector assembly.

No. of Positions	Dimensions A	Low Profile Part Numbers
24	**1.467** 37.26	**1-552298-1**
36	**1.977** 50.22	**1-552297-1**
50	**2.572** 65.33	**1-552027-1**
64	**3.167** 80.44	**1-552296-1**

Cable-to-Panel Accessories

Snap-In Panel Mount Strain Relief

No additional panel mounting hardware required.

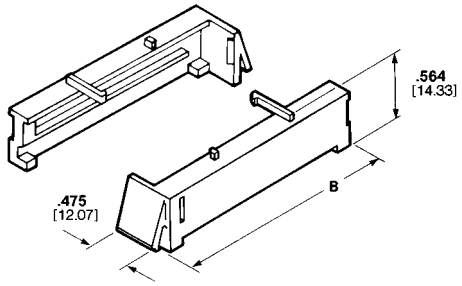

Note: Two required per assembly.

No. of Positions	Dimension B	Panel Thickness	Color	Part Number
50	**2.514** 63.86	**.090** 2.29	Black	552962-3

Note: 1. For use with thin flange connectors only.
2. Recommended for use with CHAMP-LOK Connector Assembly Hardware. No panel mounting hardware necessary when utilized.
3. Strain Relief recommended for installation of Panel Mount Connectors to prevent inadvertent contact or conductor damage.

Cable-to-Panel Hardware Kits

(One kit required per assembly)



Screw Lock Hardware Kit For Rear Panel Mount Applications
Part Number 552568-1

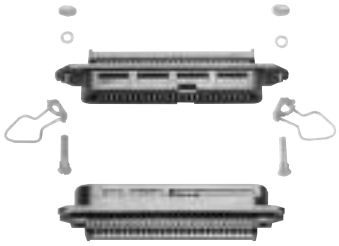

Bail Lock Hardware Kit
Part Number 552567-1



Bent Bail Lock Hardware Kit For 90° Strain Relief Cover
Part Number 552567-2

Products for Industrial & Commercial Applications
Dimensions are shown for reference purposes only.
Dimensions are in inches and millimeters unless otherwise specified. Values in brackets are metric equivalents.
Specifications subject to change.
Technical Support Center
1-800-522-6752
www.tycoelectronics.com

Shielded Cable Connectors

Product Facts

- **Designed for shielding, NOT just as metal shell connector**
- **Available in 24-, 36- and 50-position plugs and receptacles**
- **Available in bail and screw lock plug and thru-hole receptacle styles with pre-loaded insulation displacement contacts in a choice of two wire slot sizes**
- **Capable of using any standard CHAMP connector applicator tooling**
- **Unique, high tensile strain relief with adjustable ratchet**
- **Conducive to post molding simply by deleting 180° cover kit**
- **No outer crimp ferrule required**
- **Fully compatible with all die cast, metal shell panel mount CHAMP connectors in a variety of termination styles, and intermateable with all those of a similar design**



The CHAMP Connector product line continues to expand, fulfilling the needs of the various industries. The Shielded CHAMP Cable Connectors have been specifically designed to produce the optimum in shielding effectiveness while still offering low initial cost and ease of assembly with the applied-cost-savings of a proven insulation displacement system.

Shielded CHAMP Cable Connectors are available in 24, 36 and 50 position plugs and receptacles with either bail lock or screw lock plug and thru-hole receptacle styles. Connectors are shipped with contacts preloaded and are ready for termination in all standard CHAMP Connector applicator tooling. Two different contact sizes are available—B-slot, 24 AWG [0.51 mm] and 26 AWG [0.04 mm] (solid) or 24 AWG [0.20 mm^2] (7-strand); and E-slot, 26-27-28 AWG [0.14-0.10-0.09 mm^2] (7-strand) wire.

Superior shielding performance is achieved due to minimal leakage from a specially designed two-piece, precision formed shield. Positive contact with the panel mounted connector is obtained by the interface of metal “spring fingers” which protrude through small openings around the perimeter of the plug and contact plate on receptacle. Highly effective braid termination is achieved with an outstanding stored energy design incorporated into the two-piece shield.

In addition to the superior shielding effectiveness, another important feature of the connector is the design of the outer plastic strain relief cover, which uses a ratcheting wedge that provides greater strain relief as more tension is applied to the cable. Should post molding be desired, the 180° cover kit may be deleted.

Products for Industrial & Commercial Applications
Dimensions are shown for reference purposes only.
Dimensions are in inches and millimeters unless otherwise specified. Values in brackets are metric equivalents.
Specifications subject to change.
Technical Support Center
1-800-522-6752
www.tycoelectronics.com

Shielded Cable Connector Kits

Material and Finish:

Housing and Cover — Thermoplastic, black

Terminals — Gold over nickel plated high strength copper alloy

Shield — Bright nickel plated carbon steel

Strain Relief — Flame retardant NYLON, black

Ferrule — Copper alloy

Hardware — Zinc plated steel

Specifications:

Insulation Diameter — .045 [1.14] max.

Terminal Center-to-Center Spacing — .085 [2.16]

Slot Designation stamped on contacts which are preloaded in housing.

B-Slot — 24 AWG [0.51] mm] and 26 AWG [0.40 mm] (solid) or 24 AWG [0.20 mm²] (7 strand)

E-Slot — 26-27-28 AWG [0.12-0.10-0.09 mm²] (7 strand) wire

Note: Connector kits shipped unassembled.

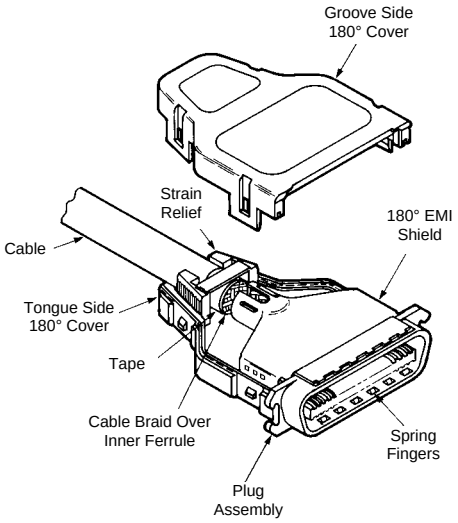

Plug Connector Kit

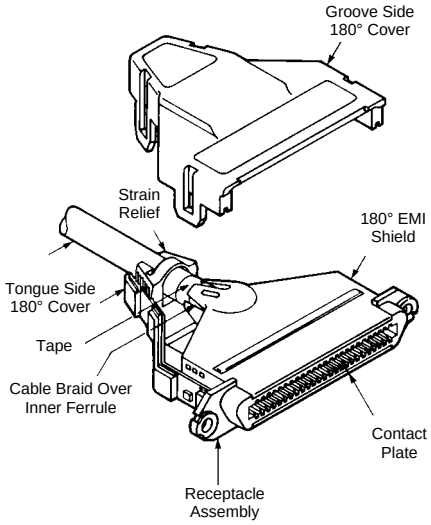

Receptacle Connector Kit

Inner Ferrule



Inside Diameter	Inner Ferrule Part Number
.350 8.89	554725-3
.400 10.16	554725-4

Inside Diameter	Inner Ferrule Part Number
.450 11.43	554725-5
.500 12.70	554725-6

No. of Positions	Cable Range	Part Numbers						
		Shielded Plug Kit				Shielded Receptacle Kit		
		Screw Lock		Bail Lock		Screw or Bail Lock		Cover Kits
		B Slot	E Slot	B Slot	E Slot	B Slot	E Slot	
24	**.250-.500** 6.35-12.70	—	554948-3[4]	—	—	—	—	554944-1
36	**.250-.500** 6.35-12.70	—	—	554950-2	554950-1	—	—	554945-1
50	**.350-.625** 8.89-15.88	554954-2	554954-1	554953-2[1]	554953-1[1]	554955-2[2]	554955-1[2]	554946-1[3] 554946-2

[1] SCSI applicable.
[2] SCSI applicable with Hardware Kit **Part Number** 552561-6.
[3] For cable diameter of .500 [12.70] or less use -1 kit. For cable diameter greater than .500 [12.70] use -2 kit.
[4] Connector with M3.5 threads kits includes M3.5 x 2.00 [50.80] standoff stud.

Products for Industrial & Commercial Applications
Dimensions are shown for reference purposes only.
Dimensions are in inches and millimeters unless otherwise specified. Values in brackets are metric equivalents.
Specifications subject to change.
Technical Support Center
1-800-522-6752
www.tycoelectronics.com

CHAMP Latch Low Profile Connectors

Product Facts

- **Ready to use connectors—strain relief covers preassembled to connector bodies**
- **Overall assembled dimension of .820 [20.83]**
- **Simple one-step termination operation**
- **May be used in "dead-end" or "daisy-chain" applications**
- **Hardware kits available for Cable-to-Cable or Cable-to-Panel applications**
- **Available in 24, 36 and 50 positions**
- **Capable of mass termination without time consuming soldering and prestripping of wire**
- **Terminates .050 [1.27] centerline 26 AWG [0.40 mm] (solid); 28 AWG [0.08-0.09 mm^2] (stranded); 28 AWG [0.32 mm] (solid) or 30 AWG [0.25 mm] (solid) copper ribbon cable, including certain twisted pair types from .032-.045 [0.81-1.14] thick**
- **Available in standard connectors, preassembled and loose-piece shielded**

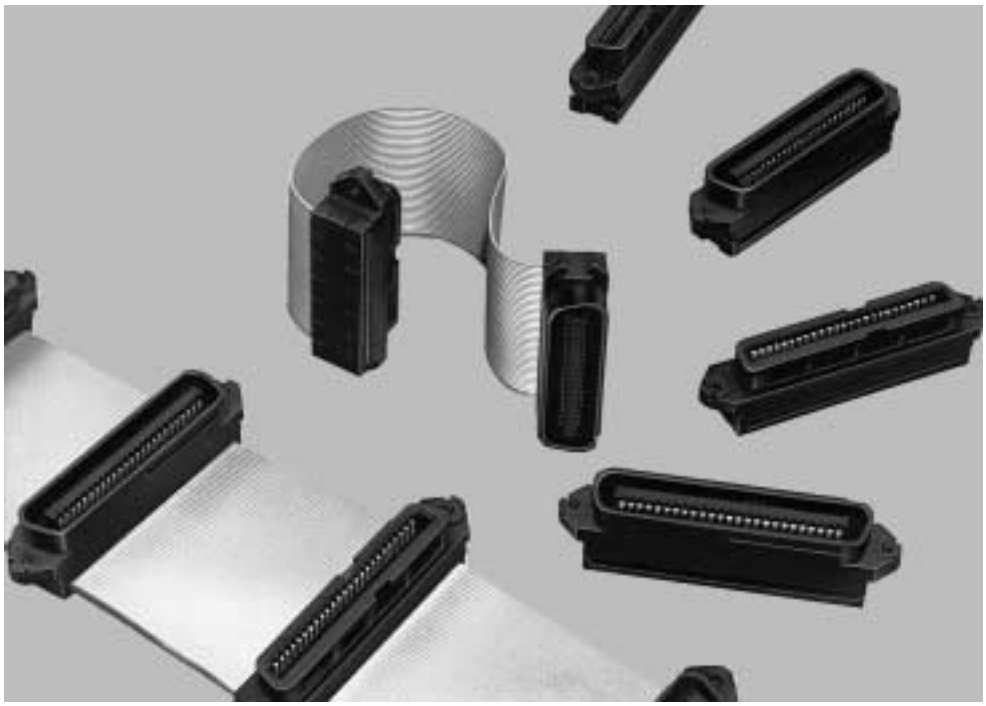

The CHAMP Latch Low-Profile Connector comes ready to use—just slide the cable in and squeeze. The underside of the strain relief cover is fluted to assist in proper cable orientation. Plastic "barbs" sticking up from the connector body act as guides for proper cable alignment during insertion. When terminated, these "barbs" pierce the cable insulation between the conductors and lock on to the strain relief cover.

Another advantage to this connector is its overall assembled dimension (.820 [20.83]), which takes up less space inside or outside of the equipment.

Standard connectors are available in 14, 24, 36 and 50 position plugs or receptacles. Shielded CHAMP Latch Connector version receptacles are available loose piece and preassembled in 24, 36, and 50 positions. A 64 position plug or receptacle can be supplied with an assembled height of 1.130 [28.70]. For 64 position plug and receptacle part numbers and specifications, contact AMP. CHAMP Latch Connectors provide a fast, reliable means of mass terminating .050 [1.27] centerline ribbon cable without time-consuming soldering and prestripping of wire. They are capable of terminating 26 AWG [0.40 mm] (solid); 28 AWG [0.08-0.09 mm^2] (stranded) 28 AWG [0.32 mm] (solid) or 30 AWG [0.25 mm] (solid) copper ribbon cable.

Termination of CHAMP Latch Low Profile Connectors is accomplished in a simple onestep operation using the appropriate CHAMP Latch tooling. The ability to make "daisy chain" terminations requires nothing more than depressing the stop bar on the hand tool or repositioning the stop bar provided on the base plate for the manual applicator.

The housings and covers are constructed of black thermoplastic. The terminals are gold over nickel plated high strength copper alloy on the mating face and gold flash over nickel plate on the terminating side. The mating face consists of 2 rows of terminals on .085 [2.16] centers. Terminating side consists of terminals on .100 [2.54] centers for an effective .050 [1.27] staggered termination. EMI Shield, for Shielded Connectors, are die cast zinc with nickel plating.

Connector hardware kits are available for Cable-to-Cable (Screw Lock, Bail Lock and CHAMP-LOK connectors) applications, and Cable-to-Panel (Screw Lock, Bail Lock, Metric Screw Lock for IEEE-488 Applications and CHAMP-LOK connector) applications.

Note: CHAMP Latch connectors have been tested on a wide variety of .050 [1.27] centerline cables conforming to AMP drawings 746395, 746396 and 86901. If cables other than those specified are used, forward sample of cable for approval to Tyco Electronics. Contact Technical Support Center 1-800-522-6752 for address.

Products for Industrial & Commercial Applications
Dimensions are shown for reference purposes only.
Dimensions are in inches and millimeters unless otherwise specified. Values in brackets are metric equivalents.
Specifications subject to change.
Technical Support Center 1-800-522-6752 www.tycoelectronics.com

CHAMP Latch Low Profile Connectors

Material and Finish:

Housing and Covers — Thermoplastic (black)

Terminals — Gold over nickel plated high strength copper alloy on mating face and gold flash over nickel plate on terminating side

Panel Mount Plug Assembly

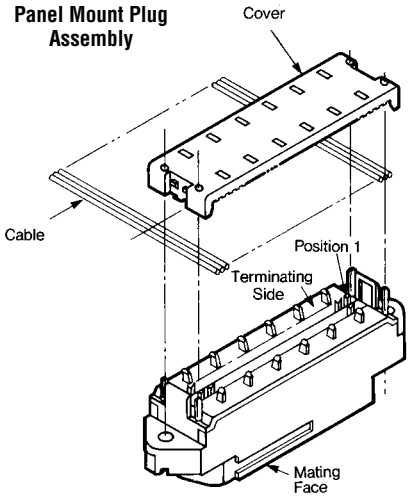

Panel Mount Receptacle Assembly

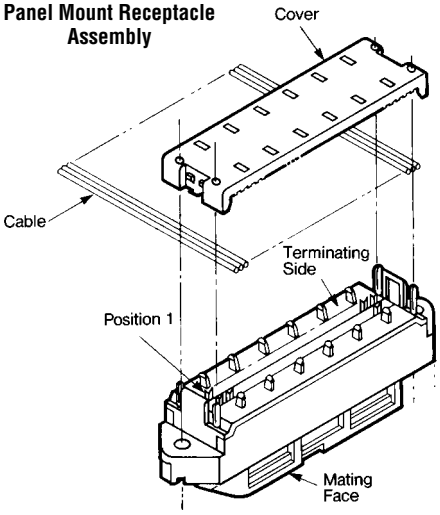

No. of Positions	Part Numbers				
	Bail Lock Plug Assembly	Screw Lock Plug Assembly	Screw Lock Receptacle Assembly	Panel Mount Plug Assembly	Panel Mount Receptacle Assembly
14	—	553596-1	553597-1	—	—
24	—	553598-1	553599-1	554103-1	554088-1
36	554084-1	553600-1	553601-1	—	554089-1
50	554085-1	553602-1	553603-1	554105-1	554090-1

CHAMP Latch Connectors 64 Position

Style PS

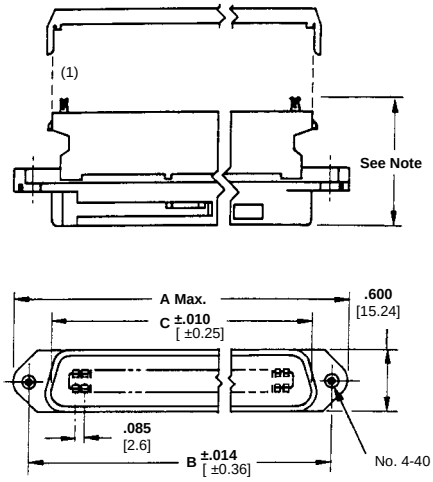

Style PB

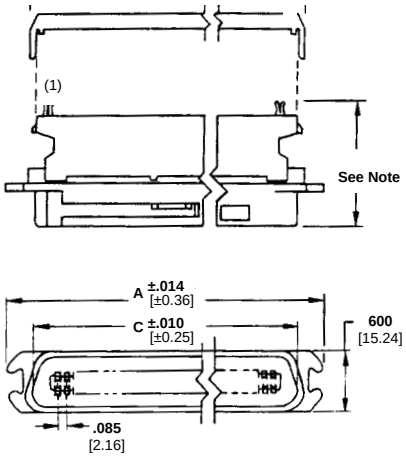

Connector Code:
PS=Plug, Screw Lock
PB=Plug, Bail Lock

Style	Dimension			Part Numbers
	A	B	C	
PS	**3.875** 98.43	**3.542** 89.97	**3.135** 79.63	552837-1
PB	**3.651** 92.74	—	**3.135** 79.63	552933-1

Note: 1.130 [28.7] without strain relief cover, 1.168 [29.67] with strain relief cover

Products for Industrial & Commercial Applications
Dimensions are shown for reference purposes only.
Dimensions are in inches and millimeters unless otherwise specified. Values in brackets are metric equivalents.
Specifications subject to change.
Technical Support Center
1-800-522-6752
www.tycoelectronics.com

CHAMP Latch Connectors 64 Position

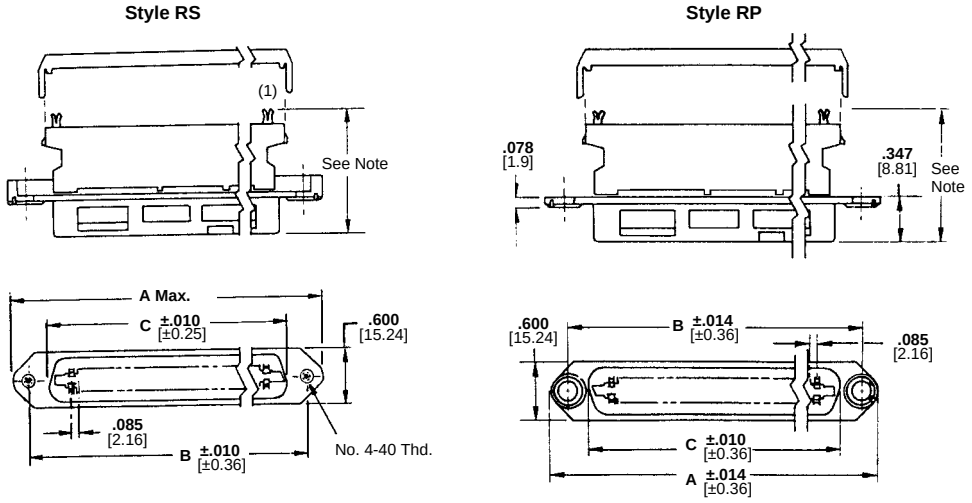

Connector Code:
RS=Receptacle, Screw or Bail Lock
RP=Receptacle, Panel Mount,
Screw or Bail Lock

Style	Dimension			Part Numbers
	A	B	C	
RS	**3.875** 98.43	**3.542** 89.97	**3.115** 79.12	552838-1
RP	**3.875** 98.43	**3.542** 89.97	**3.115** 79.12	552843-1

Note: 1.130 [28.7] without strain relief cover, 1.168 [29.67] with strain relief cover

CHAMP Latch Low Profile Connectors



CHAMP-LOK Hardware Kit
Part Number 552723-1
(36 & 50 Position)
Part Number 552723-2
(914 & 24 Position)

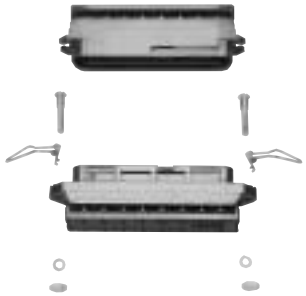

Bail Lock Hardware Kit
Part Number 552561-3

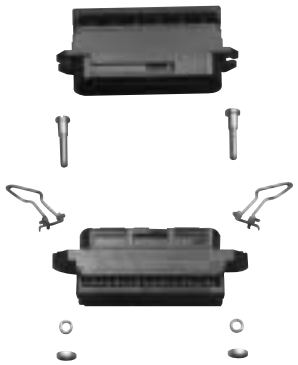

Bail Lock Hardware Kit
Part Number 552567-3



CHAMP-LOK Connector Hardware Kit
Part Number 553359-1 **(36 & 50 Position)**

Shielded CHAMP Latch Connectors

Product Facts

- **Ready to use strain relief covers preassembled to connectors**
- **Simple one-step termination**
- **Dead end or daisy-chain applications**
- **Hardware kits available for panel mounting**
- **Terminates conductors without time-consuming soldering**
- **Terminates .050 [1.27] centerline 26 AWG [0.40 mm], 28 AWG [0.32 mm] and 30 AWG [0.25 mm] (solid) or 28 AWG [0.08-0.09 mm^2] (stranded) wire**



Shielded CHAMP Latch panel mount connectors are designed to provide the optimum in EMI protection at the chassis and still permit mating with CHAMP Connectors and other compatible connectors in 24, 36 and 50 position sizes.

The housing and covers are constructed of black thermoplastic. The terminals are gold over nickel plated high strength copper alloy on the mating face and gold flash over nickel plate on the terminal side. The mating face consists of 2 rows of terminals on .085 [2.16] centers. Terminating side consists of terminals on .100 [2.54] centers for an effective .050 [1.27] staggered termination. Die cast shields are die cast zinc with nickel plating. Hardware kits are available for panel mount in standard or IEEE metric screw lock.

Shielded CHAMP Latch Panel Mount Connectors

CHAMP Latch Connectors for .050 [1.27] Ribbon Cable



Material and Finish:

Housing and Strain Relief Clip — thermoplastic (black)

Terminals — gold over nickel plated high strength copper alloy on mating face and gold flash over nickel plate on terminating side

EMI Shield — nickel plated die casting

Loose Piece End View

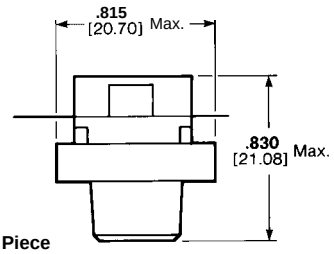

Preassembled Bail Lock End View

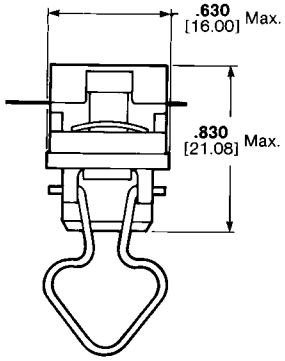

Loose Piece

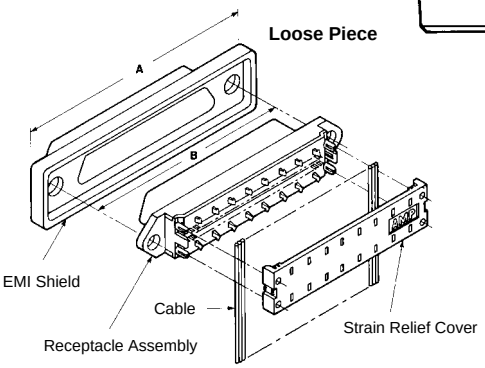

No. of Positions	Loose Piece			Preassembled				
	Dimension		Part Numbers	Dimensions		Bail Lock Part Number	Screw Lock Part Numbers	
	A	B		A	B	4-40 Hole	6-32 Hole	4-40 Hole
24	**2.380** 60.45	**1.842** 46.79	—	**2.205** 56.01	**1.842** 46.79	—	554434-1[3]	—
36	**2.380** 60.45	**2.352** 59.74	554348-1	**2.715** 68.96	**2.352** 59.74	554346-2	—	—
50	**3.475** 88.27	**2.946** 74.83	554350-1	**3.310** 84.07	**2.947** 74.85	—	—	554436-2[1, 2]

[1] SCSI applicable with Bail Lock Hardware Kit **Part Number** 554818-2.
[2] SCSI applicable.
[3] Can be used with Interface Bus Applications per IEEE-488.

CHAMP Latch Hardware Kits

Material and Finish:

Mounting Stud — Bright zinc plated carbon steel

Pan Head Screw — Passivated stainless steel

Metric Standoff Stud — Black oxide coated carbon steel

Only fastening hardware supplied, other items shown for reference purposes.

Loose Piece Shield



Metric Screw Lock Hardware Kit per IEEE-488 Application
For Front Panel Mount
Part Number 553636-2
For Rear Panel Mount
Part Number 553636-3

Preassembled Shield

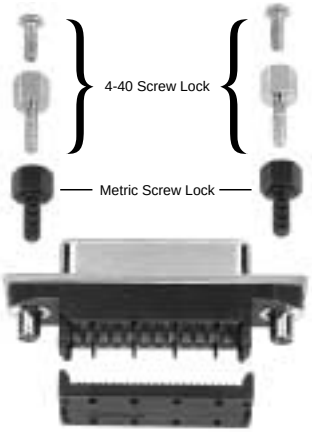

Part Number 554272-1
(for use with 4-40 Screw Lock, Rear Panel Mount Only)

Metric Screw Lock Hardware Kit for 24-Position IEEE-488, Preassembled,
Part Number 554808-1 **Rear Panel Mount Only**

CHAMP PCB Connectors

Product Facts

- **Capable of being used with single- or double-sided printed circuit boards**
- **Eliminates the need to hand solder, except for Edge Mount Connectors**
- **Connectors fully intermateable with others of similar design**
- **UL 94V-O self-extinguishing thermoplastic housings and accessories**
- **Connectors available in 14, 24, 36, 50 and 64 positions with a choice of mounting methods: screw, bail mount, or locking latch types**
- **Capable of accommodating printed circuit board thicknesses of .062 [1.57], .093 [2.36] or .125 [3.18]**
- **Diversified applications throughout the following markets—medical equipment, data control systems, telephone interconnect systems and electronic instrumentation (commercial and industrial)**
- **Operating temperature range of -40°C to +105°C**

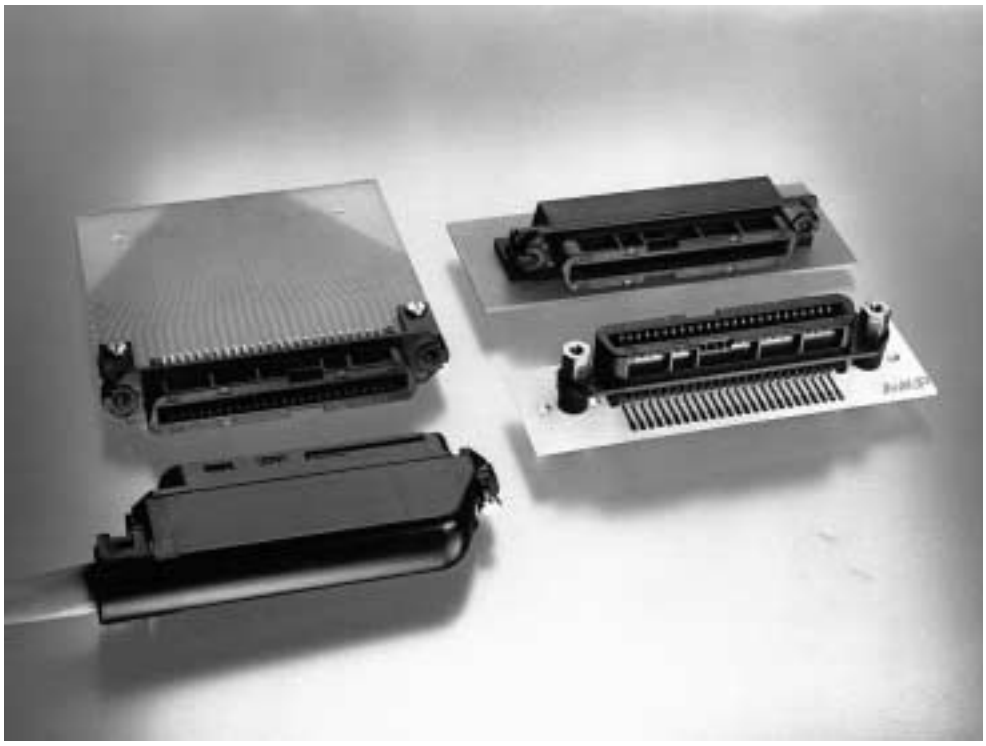

CHAMP Printed Circuit Board Connectors are fully intermateable with existing connectors of a similar design. They are capable of accommodating printed circuit board thicknesses from .062-.125 [1.57-3.18].

Applications for this type of connector are widely diversified and are used in the following markets:

- Medical Equipment
- Data Control Systems
- Telephone Interconnect Systems
- Electronic Instrumentation (Commercial and Industrial)

The connector is designed for high density wave solderable applications, eliminating the need for hand soldering, except for Edge Mount Connectors and can be applied to either single- or double-sided boards. The surface mounting area is minimal and allows full usage of available printed circuit land area.

These connectors are available in 14, 24, 36, 50 and 64 positions with a choice of mounting methods for your specific needs, i.e. screw, bail mount or locking latch types. Board mounting for Right-Angle Connectors is accomplished by nut and bolt, pop riveting or an optional self-tapping screw arrangement. Edge and Vertical Mount Connectors are board mounted by a wide choice of hardware applicable to your specific applications.

The connector requires minimum hardware and installation time and is compatible with conventional printed circuit mass production soldering processes, thereby providing cost savings.

For additional information concerning the CHAMP Printed Circuit Board Connectors, consult Tyco Electronics.

Products for Industrial & Commercial Applications

Dimensions are shown for reference purposes only.

Dimensions are in inches and millimeters unless otherwise specified. Values in brackets are metric equivalents.

Specifications subject to change.

Technical Support Center
1-800-522-6752
www.tycoelectronics.com

CHAMP PCB Connectors

Right-Angle Connectors

Material and Finish:

Housing, bracket, plate and comb — black thermoplastic, 94V-0 rated

Terminal — selectively plated gold over nickel plated high strength copper alloy, tin plated tails

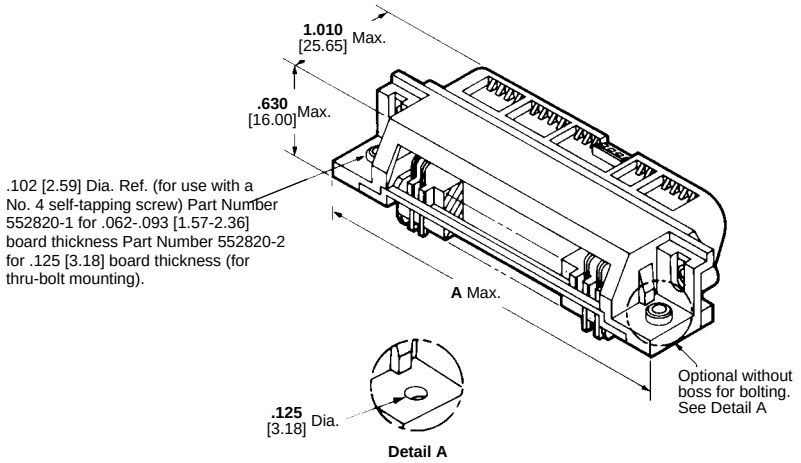

Receptacle–Side View

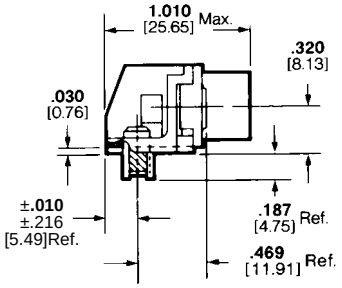

Plug–Side View

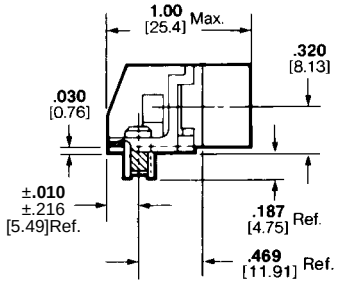

Standard Orientation

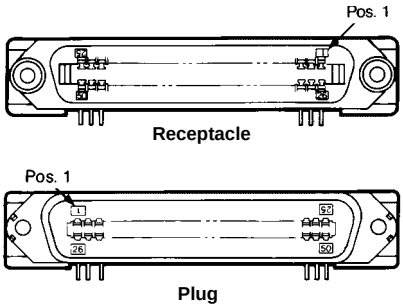

Reverse Orientation

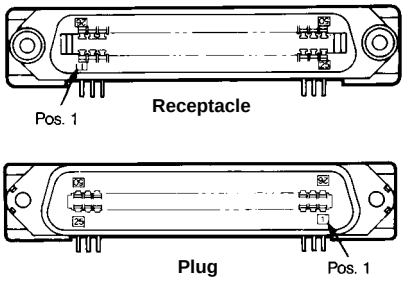

Self-Tapping

No. of Positions	Dimension A	Part Numbers			
		Standard Orientation		Reverse Orientation	
		Receptacle	Plug	Receptacle	Plug
14	**1.750** 44.45	552738-1	—	—	—
24	**2.175** 55.25	552740-1	552741-1	552791-2[1]	—
36	**2.685** 68.20	552742-1	552743-1	—	—
50	**3.280** 83.31	552725-1	552726-1	552725-3	552726-3
64	**3.875** 98.43	552744-1	—	552744-2	—

[1] For IEEE-488 applications.

Thru-Bolt Mounting (See Detail A)

No. of Positions	Dimension A	Part Numbers	
		Standard Orientation	Reverse Orientation
		Receptacle	Receptacle
24	**2.175** 55.25	—	552791-4[1]
50	**3.280** 83.31	552725-2	—

[1] For IEEE-488 applications.

Products for Industrial & Commercial Applications
Dimensions are shown for reference purposes only.
Dimensions are in inches and millimeters unless otherwise specified. Values in brackets are metric equivalents.
Specifications subject to change.
Technical Support Center
1-800-522-6752
www.tycoelectronics.com

Right-Angle Connector Hardware Kits

Only fastening hardware supplied, other items shown for reference purposes



Screw Lock Hardware Kit
Part Number 552631-1
Rear Panel Mount Only
(One kit required per assembly)
For pc board-to-panel applications
(Panel thickness .062 [1.57] max.)



Bail Lock Hardware Kit
Part Number 552561-3
(For use with 180° Strain Relief Cover)
(One kit required per assembly)
For pc board-to-cable applications

Notes: 1. Recommended right-angle connector pc board mounting hardware to be a No. 4 self-tapping screw, **Part Number** 552820-1 for .062-.093 [1.57-2.36] and **Part Number** 552820-2 for .125 [3.18] board thickness.
2. Metric hardware is also available for use with the 24 Position Right-Angle Receptacle per IEEE-488 **Part Number** 552791-1 or -2.
• For Standard Mount—**Part Number** 552633-3
• For Rear Panel Mount—**Part Number** 552633-4



Bent Bail Lock Hardware Kit
Part Number 552561-4
(For use with 90° Strain Relief Cover)
(One kit required per assembly)
For pc board-to-cable applications



CHAMP-LOK Connector Kit
Part Numbers 552723-1 **(36 and 50 Position),**
552723-2 **(14 and 24 Position)**
and 552723-3 **(64 Position Only)**
(One latch required per assembly)
For pc board-to-cable applications



Screw Lock Hardware Kit
Part Number 229911-1
(two required per assembly)
For pc board-to-cable applications

Products for Industrial & Commercial Applications
Dimensions are shown for reference purposes only.
Dimensions are in inches and millimeters unless otherwise specified. Values in brackets are metric equivalents.
Specifications subject to change.
Technical Support Center
1-800-522-6752
www.tycoelectronics.com

Vertical Connectors

Plug

Vertical Mount Style PV—Plug, Screw Lock

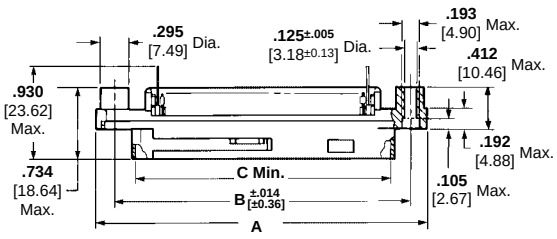

Receptacle

Style RV—Receptacle, Screw or Bail Lock

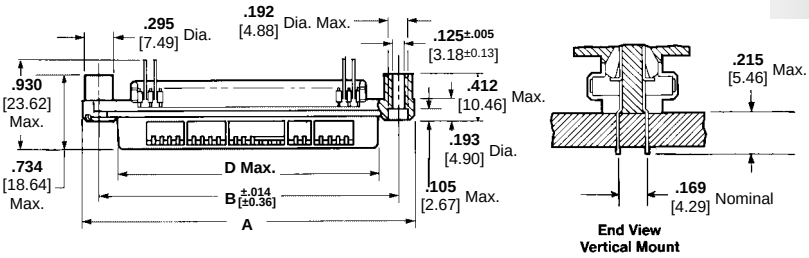

No. of Positions	Dimensions				Part Numbers	
					Plug	Receptacle
	A	B	C	D	Style PV Vertical Mount	Style RV Vertical Mount
24	**2.175** 55.25	**1.842** 46.79	**1.426** 36.22	**1.425** 36.20	—	552224-1[1]
36	**2.685** 68.20	**2.352** 59.74	**1.936** 49.17	**1.935** 49.15	—	552235-1
50	**3.280** 83.31	**2.946** 74.83	**2.531** 64.29	**2.530** 64.26	552116-1	552118-1

[1] .189 [4.80] Diameter Mounting Hole, for IEEE Application.

Notes: 1. Printed circuit board material—glass-filled polyester 94V-0 rated.
2. Order all hardware required separately.

Vertical Mount Hardware Kits

Only fastening hardware supplied, other items shown for reference purpose



Screw Lock Hardware Kit—
Part Number 552563-1
(One kit required per assembly)



Bent Bail Lock Hardware Kit—
Part Number 552562-2
(One kit required per assembly)



Bail Lock Hardware Kit—
Part Number 552562-1
(One kit required per assembly)



J-Hook Screw Lock Hardware Kit—
Part Number 552690-1
(One kit required per assembly)

ACTION PIN (Compliant Pin) PCB Connectors



ACTION PIN connectors for printed circuit board applications combine the high reliability of the CHAMP Insulation Displacement connector interface with the utilization and cost savings of ACTION PIN terminals. They are available in both plug and receptacles in 14, 24, 36, 50 and 64 position sizes.

The connectors are supplied preloaded with contacts and a plastic cover which serves as the bearing surface to press the connector into the board. Rapid assembly is made possible by use of a simple arbor tool. The plastic cover also serves as a dust cover which may be left in place until ready to use.

The connectors may be mounted on pc boards with a thickness of .062 [1.57] to .125 [3.18]. They are designed for interface with standard CHAMP IDC cable-to-panel plugs or receptacles and are available for use with screw lock, bail lock or unique CHAMP-LOK connector locking clip hardware.

The design of the ACTION PIN terminal permits insertion into printed circuit boards having either plated-thru or unplated holes. In plated-thru holes, completely reliable termination may be accomplished either by press fit of the pins or by both press fitting and subsequent conventional soldering. In unplated holes, the pins must be soldered in place.

For the connectors with self-retained contacts, hardware to secure connector to the pc board may not be required if unmating force of mating connectors does not exceed 1 lb. [4.45 N] per terminal (50 lbs. [222.4 N] for 50 positions.)

Products for Industrial & Commercial Applications
Dimensions are shown for reference purposes only.
Dimensions are in inches and millimeters unless otherwise specified. Values in brackets are metric equivalents.
Specifications subject to change.
Technical Support Center
1-800-522-6752
www.tycoelectronics.com

ACTION PIN (Compliant Pin) PCB Connectors

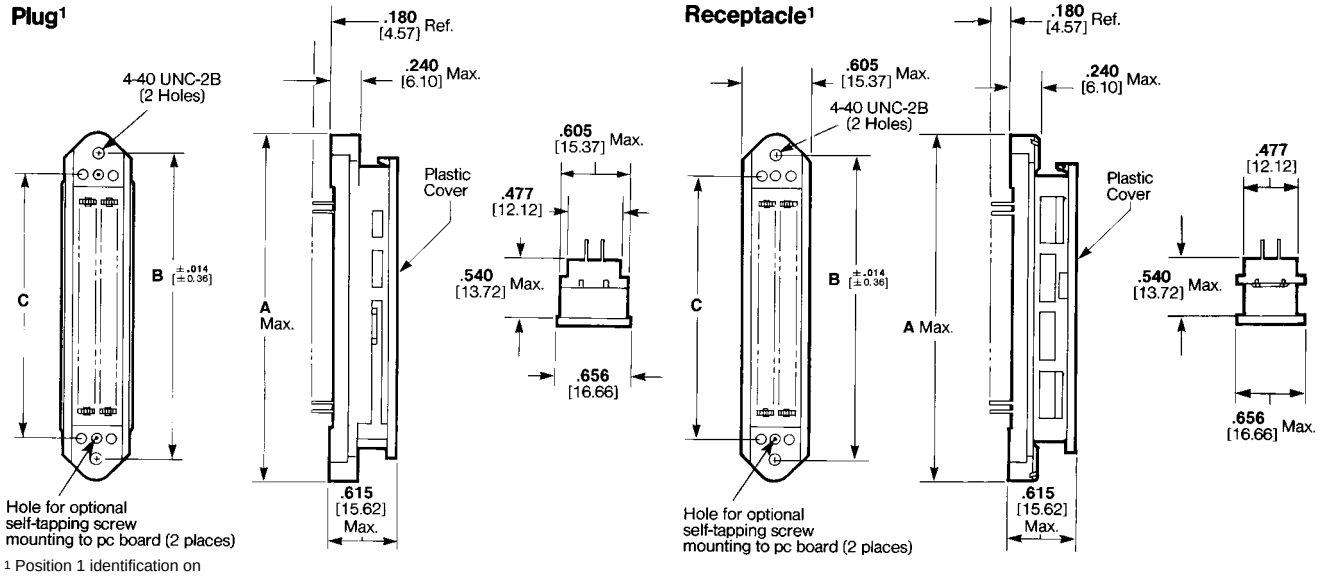

1 Position 1 identification on mating side of housing flange.



No. of Positions	Dimensions			Part Numbers	
	A	B	C	Plug	Receptacle
14	**1.750** 44.45	**1.416** 35.97	**1.016** 25.81	—	553443-1
24*	**2.175** 55.25	**1.842** 46.79	**1.442** 36.63	553444-2	553443-2
36	**2.685** 68.20	**2.352** 59.74	**1.952** 49.58	553444-3	553443-3
50	**3.280** 83.31	**2.946** 74.83	**2.546** 64.67	553444-4 554758-11	553443-4 554753-11 557984-12
64	**3.875** 98.43	**3.542** 89.97	**3.142** 79.81	553444-5 554759-11	553443-5

*For IEEE-488 Applications use **Part Number** 553609-1.
1 Connector contains self retained terminals.
2 Shielded for screw lock application.
Hardware on page 1124 is compatible with the ACTION PIN Connectors on this page.

Products for Industrial & Commercial Applications
Dimensions are shown for reference purposes only.
Dimensions are in inches and millimeters unless otherwise specified. Values in brackets are metric equivalents.
Specifications subject to change.
Technical Support Center
1-800-522-6752
www.tycoelectronics.com

Shielded PCB Connectors

Product Facts

- Excellent protection from electromagnetic interference or electrostatic discharge to sensitive circuitry
- Connectors compatible and intermateable with all others of similar design
- Available in three different panel-mount styles
- The shielded right-angle, edge-mount and vertical-mount CHAMP connectors for pc board application are rear panel-mounted
- Choice of fastening hardware—standard screw lock, bail lock, metric screw locks per IEEE-488 applications
- Connectors available in kit form or preassembled versions
- Thick die-cast metal shell offers superior shielding over a wide frequency range
- Shell protects equipment from inadvertent electrostatic discharge
- Housings are stackable
- Applied cost savings
- Available in 24, 36 and 50 positions



Shielded CHAMP Connectors afford excellent protection from electromagnetic interference or electrostatic discharge to sensitive circuitry. These connectors are completely compatible and intermateable with all others of a similar design, yet they are unique because of their superior construction.

They are available in three different panel-mount styles. Each style consists of an appropriate CHAMP connector and a rugged die-cast metal shell. The shielded right-angle, edge mount and vertical mount CHAMP connector versions for pc board applications must be rear panel-mounted.

A choice of fastening hardware is available in each of the styles noted above. They include standard screw lock, bail lock or metric screw lock as required by IEEE-488.

Each connector is shipped in bulk or individual kit form and consists of the die cast metal shell and appropriate style connector. After pc board mounting, it is easily installed to the panel with the appropriate hardware kit, which is ordered separately.

The thick die-cast metal shell offers superior shielding over a wider frequency range than drawn sheet metal or plated/filled plastics. This shell also protects the equipment from inadvertent electrostatic discharge because the die-casting, together with the fastening hardware, assures a reliable chassis ground connection.

Due to its inherent rigidity, the die-cast housing may be stacked without distortion or bending of connector flanges and panel. This advantage contributes to the overall effectiveness of the system.

The Shielded CHAMP right-angle pc board connector offers a low-cost transition to or from double-sided circuitry, the Shielded CHAMP edge-mount and vertical-mount connectors also allow accessibility to both sides of double-sided boards. All three of these styles are available in 24, 36 and 50 position sizes.

Products for Industrial & Commercial Applications
Dimensions are shown for reference purposes only.
Dimensions are in inches and millimeters unless otherwise specified. Values in brackets are metric equivalents.
Specifications subject to change.
Technical Support Center
1-800-522-6752
www.tycoelectronics.com

Shielded Right-Angle Connectors

Preassembled Bail Lock



Material and Finish:

Housing, Bracket Adaptor Comb and Terminal Support Plate — polyester, black

Bail-Clip — passivated stainless steel

Receptacle Shield — bright nickel over copper plated die casting

Terminals — selectively plated gold over nickel plated high strength copper alloy, tin plated tails

Ground Bracket — zinc plated carbon steel

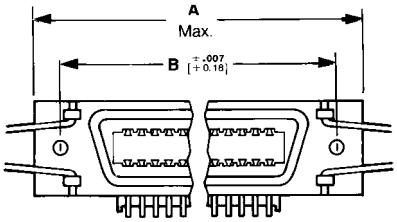

Standard Orientation

No. of Positions	Preassembled Shielded Bail Lock			
	Dimensions		Screw Size	Part Numbers Standard
	A	B		
36	**2.710** 68.83	**2.352** 59.74	4-40	555233-1
50	**3.305** 83.95	**2.946** 74.83	4-40	554901-1[1]

[1] SCSI applicable

Preassembled Screw-Lock



Material and Finish:

Housing, bracket, connector comb and terminal support plate — thermoplastic (black)

Terminals — selectively plated gold over nickel plated high strength copper alloy, tin plated tails

EMI Shield — Nickel plated die casting

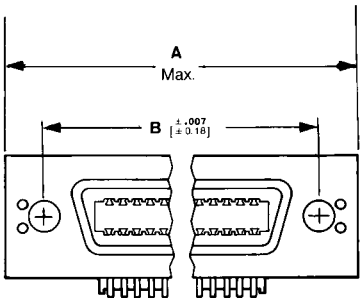

Standard Orientation

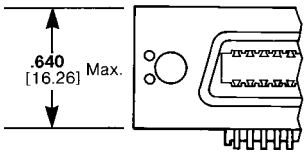

Reverse Orientation

No. of Positions	Preassembled Screw Lock				
	Dimensions		Screw Size	Part Numbers	
	A	B		Standard	Reverse
24	**2.205** 56.01	**1.842** 46.79	6-32	553811-1[2]	553811-2[2]
50	**3.305** 83.95	**2.946** 74.83	4-40	553813-3[1]	553813-4[1]

[1] SCSI applicable with use of bail lock hardware kit **Part Number** 554818-2.
[2] Can be used with Interface Bus Application per IEEE-488.

Shielded Right-Angle Connectors

Board Locking Grounding

Material and Finish:

Housing, Bracket Adapter Comb and Terminal Support Plate — polyester, black

Bail-Clip — passivated stainless steel

Receptacle Shield — bright nickel over copper plated die casting

Terminals — selectively plated gold over nickel plated high strength copper alloy, tin plated tails

Ground Bracket — tin-lead plated carbon steel

Rear Panel Mounting Detail (Shown for reference only)

Standard Profile Connector

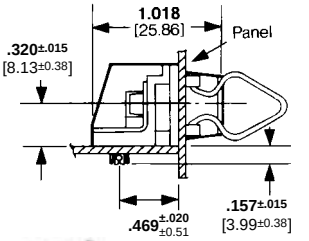



Low Profile Connector

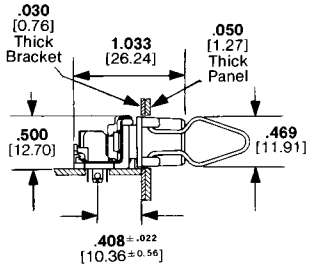

(See chart footnotes)

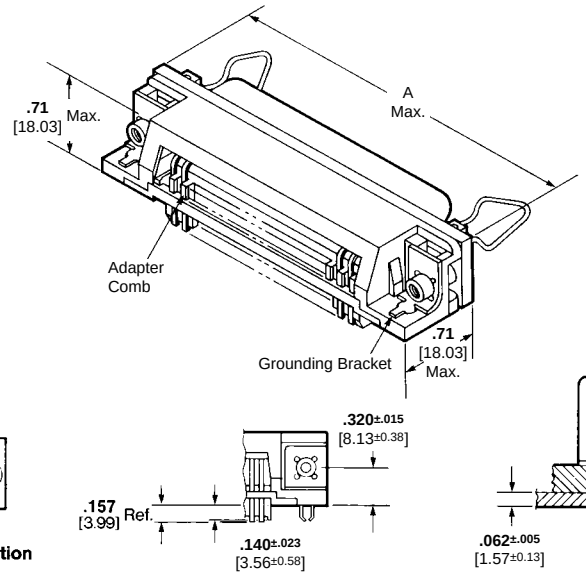

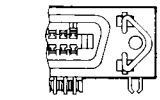

Standard Orientation

No. of Positions	Dimension A	Hardware Type	Screw Size	Part Numbers		
				Standard	Reverse	Low-Profile
24	**2.205** 56.01	Screw Lock	6-32	554923-2[1]	554923-1[1]	555139-1[4] 555139-2[4]
36	**2.715** 68.96	Bail Lock	4-40	555119-1[1] 555520-2[1,3]	—	—
50	**3.320** 84.33	Bail Lock	4-40	555057-1[1,2]	—	—
50	**3.320** 84.33	Screw Lock	4-40	557932-2[5]	557932-1[5]	—

[1] Maximum Pc board thickness is .062 [1.57]
[2] SCSI applicable
[3] Has drawn metal shield
[4] Shielded with ground bracket 4-40 thread (low profile)
[5] Plated Backshell

Shielded Right-Angle Connector Hardware Kits

(Only fastening hardware supplied; other items shown for reference purposes.)

Material and Finish:

Bracket — Zinc plated carbon steel

Pan Head Screw — passivated stainless steel

Screw Lock — zinc plated with yellow chromate over steel

Metric Screw Lock — black oxide coated carbon steel



Screw Lock Hardware Kit Part Number 554272-1 **(one kit required per assembly)**



Metric Screw Lock Hardware Kit for 24-Pos. IEEE-488 Application Only Part Number 554808-1 **(one kit required per assembly)**

Preassembled Shield Hardware Mounted View

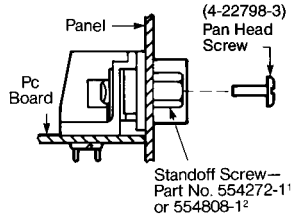

[1] Contains two 4-40 X .65 [16.51] long standoff screws, plus two 4-40 X .312 [7.92] long pan head screws.
[2] Contains two metric standoff screws with M 3.5 X 0.6-6H (internal threads) and 6-32 UNC-2A (external threads), for IEEE-488 applications.

Products for Industrial & Commercial Applications
Dimensions are shown for reference purposes only.
Dimensions are in inches and millimeters unless otherwise specified. Values in brackets are metric equivalents.
Specifications subject to change.
Technical Support Center
1-800-522-6752
www.tycoelectronics.com

Shielded Vertical Mount Connectors

Material and Finish:

Housing — thermoplastic (black)
Terminals — selectively plated gold over nickel plated high strength copper alloy, tin plated tails
EMI Shield — nickel plated die casting



Screw Lock



Bail Lock

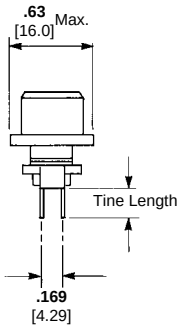

No. of Positions	Tine Length	Part Numbers		
		Screw Lock		Bail Lock
		6-32 Hole	4-40 Hole	4-40 Hole
24	**.115** 2.92	554501-1[3]	—	—
36	**.100** 2.54	—	—	555757-2[4]
	.215 5.46	—	—	554145-4
50	**.115** 2.92	—	—	554216-3[2]
	.215 5.46	—	554217-4[1]	—

[1] SCSI applicable with use of Bail Lock Hardware Kit **Part Number** 554818-2.
[2] SCSI applicable.
[3] Can be used with Interface Bus Applications per IEEE-488.
[4] Low-profile, stamped shield.

Shielded Vertical Mount Connector Hardware Kits

Only fastening hardware supplied, other items shown for reference purposes.

Material and Finish:

Pan Head Screw—zinc plated steel
Metric Standoff Screw—black oxide coated steel

Screw Lock

Part Number 554043-2 **(Screw)**



Metric
Part Number 554858-1 **(Kit)**

Recommended Pc Board Mounting Hardware Screw Length for PC Board Thickness

Screw Length (Maximum)	PC Board Thickness
.260 6.60	**.062** 1.57
.290 7.37	**.093** 2.36

Application Tooling

Portable Hand Operated Tool (MI-1)
Refer to IS 408-7559



Lacing Fixture
Refer to IS 408-7559

Standard Tool Part Number 229378-1

The standard portable hand-operated tool (MI-1) is designed for field applications and medium volume production and is capable of terminating all connectors up to 50 positions with 90° wire dress.

Lacing Fixture Part Number 230328-3

90° or 180° wire dress can be obtained with the MI-1 tool by using the removable lacing combs and placing them in the lacing fixture (shown above and ordered separately) all connectors up to 50 positions. Will not accommodate 64 positions.

Comb Kit* (6 per kit) Part Number 230327-1

For greater productivity, additional operators can use additional comb sets and lacing fixtures with a single tool.

*50-position Comb No. 231619-1 is for small conductor diameter insulation (less than .035 [0.89]) and two are required per MI-1 Tool.

Note: Best results obtained with conductor diameter to .045 [1.14] Max. with PVC insulation.

Half-Tap Tool Part Number 229378-3

For half-tap (daisy chain), 90° wire dress applications.

Multiple Wire Tool (90° wire dress) Part Number 2-229378-0

Multiple Wire Conversion Kit Part Number 230596-1

If required, the standard tool may be converted to multiple wire termination capability by use of separate multiple wire tools or a simple conversion kit.

50-Position Tool Part Number 231925-1

64-Position Tool Part Number 231880-2

F-Slot conversion tool for existing MI-1 Part Number 231928-1

For termination of F-Slot Cable Connectors.

64-Position Tool Part Number 231880-1 Reference IS 408-9412

The 64-position Comb Kit No. 231619-3 for small conductor diameter insulation (less than .035 [0.89]).

For termination of 64-position, 90° wire dress connectors only.

Palm Grip Hand Tool Kit
Part Number 229764-2, 14-64 Positions
Part Number 229451-2, 50 Position Only
Refer to IS 408-7642



The Palm Grip Hand Tool Kit is recommended for field application and low volume production. The kit includes the items listed in the chart below.

Item	Part Number
Palm Grip Tool	229451-1
Index Slides for:	
14 positions	229706-1
24 Positions	229707-1
36 Positions	229708-1
50 Positions	229621-1
64 Positions	229709-1
Cable Clamp	229622-1
Ratchet Release	229765-1
Insertion/Extraction Tool	230238-1
Tool Carrying Case	229710-1

T-Handle Wire Insertion Tool
Part Number 229384-1
Refer to IS 408-7558



The T-Handle Wire Insertion Tool is designed for minor repair work on all CHAMP connectors. It does not have the capacity of shearing the wire in the termination process.

Terminal
Insertion/Extraction Tool
Part Number 230238-1
Refer to IS 408-7787



The Insertion/Extract tool is designed to replace damaged contacts in the CHAMP plug and receptacle connectors.

Products for Industrial & Commercial Applications
Dimensions are shown for reference purposes only.
Dimensions are in inches and millimeters unless otherwise specified. Values in brackets are metric equivalents.
Specifications subject to change.
Technical Support Center
1-800-522-6752
www.tycoelectronics.com

Application Tooling

Product Facts

- Terminates discrete wire and laminated cable using the insulation displacement termination technique
- Accepts 14, 24, 36, 50 or 64 Position CHAMP Connectors
- Contains tooling assembly and conversion kits for each position
- Designed to terminate laminated cable with 28-24 AWG [0.08-0.2mm²] (stranded) or 28-24 AWG [0.32-0.51mm] (solid) conductors on .085 [2.16] centerline spacing
- Produces reliable electrical path between conductor and contact
- Able to terminate most conductors up to .045 [1.14] insulation diameter



90° Dress CHAMP Applicator and Manual Arbor Tool



180° Dress CHAMP Applicator and Manual Arbor Tool

Description	Connector Positions	Part Numbers	
		Laminated Cable on .085 [2.16] Centerline	Discrete Wire Cable 90°/180° Dress
CHAMP Applicator Only	14 thru 64	231592-2[1]	231593-2[2]
CHAMP Applicator with Manual Arbor Tool for large wire (.058 [1.47]Max.)	24 thru 64	—	820805-1[3]

Use with Manual Arbor Tool **Part Number** 91085-2 refer to Instruction Sheet 408-7777
[1] Refer to Instruction Sheet 408-3137
[2] Refer to Instruction Sheet 408-3133
[3] Refer to Instruction Sheet 408-9856

Arbor Tooling

CHAMP Miniature Applicator System

The CHAMP Arbor Tool System is capable of terminating approved laminated cables on .085 [2.16] centers without cable preparation and discrete wires in 14, 24, 36, 50 and 64 position CHAMP insulation displacement connectors.

The system consists of a manual Arbor Tool and Applicator.

Applicators are compatible with Arbor Tooling currently applying other AMP products.

The Arbor Tool offers speed gained by true mass termination and a production oriented system offering maximum flexibility and efficiency. Connector and cable size conversions can be accomplished with a minimum of downtime.

Application Tooling

CHAMPOMATOR 2.5 Terminating Machine

See page 13018

Controller (Required)

Part Number 852423-X

-1 120V - USA

-2 100V - Far East

-3 230V - Europe

CM 409-5791

CHAMPOMATOR 3A Terminating Machine

See page 13019

Part Number 1-761420-3
CM 409-5771

Note: Consult Tyco Electronics for appropriate part numbers.

Line Detwister

Part Number 852725-1 (electric)

Part Number 852725-2 (pneumatic)

CHAMP Latch Tooling

Semi-Automatic Bench Tooling



Controller Applicator

CHAMPOMATOR 2.5 Terminating Machine

Part No.	Customer Description	Manual	IS
354786-2	180° Wire Dress	409-5839	408-9867
354786-3	90° Wire Dress		

Automatic Tooling



CHAMP Latch Hand Tool
Part Number 231561-1
IS 408-3135



This tool is capable of terminating ribbon cable with 26 AWG [0.46 mm] (solid); 28 AWG [0.32 mm] (solid) and 28 AWG [0.08-0.09 mm^2] (stranded) or 30 AWG [0.25 mm] (solid) conductors to 24, 36 and 50 position low profile connectors.

If using other AMP-LATCH Ribbon Cable Connectors, use Hand Tool Kit **Part Number** 768340-1 (IS 408-9828) and Locator Kit **Part Number** 768351-1 (IS 408-9839). Tool Kit includes bench mount for increased productivity. This provides the most versatile and economical tooling.

CHAMP Latch Applicator (only)
Part Number 231576-1
IS 408-3134

Shown installed in Manual Arbor Tool
Part Number 91085-2

IS-408-7777



This tooling is capable of terminating the same solid or stranded conductors as the hand tool. The tooling is a two-piece kit that includes a locator and a cable stop insert.

The locator features a connector track to support the connector, a connector stop to position the connector and a cable guide to align the cable with the connector.

The reversible cable stop insert accommodates dead-end (flush) or daisy-chain (feed-thru) terminations with .200 [5.08] minimum spacing between connectors.

If using other AMP-LATCH Ribbon Cable Connectors use Arbor Tool **Part Number** 91085-2 or Pneumatic Auto-Cycle Tool, **Part Number** 91112-3 (IS 408-6732) with base tool **Part Number** 768338-1 (IS 408-9827), and Locator Kit, **Part Number** 768351-1 (IS 408-9839).

For 64 Position CHAMP Latch use Applicator, **Part Number** 230537-1 (includes tooling). Tooling Only, **Part Number** 230536-1.

IS 408-6504

Products for Industrial & Commercial Applications
Dimensions are shown for reference purposes only.
Dimensions are in inches and millimeters unless otherwise specified. Values in brackets are metric equivalents.
Specifications subject to change.
Technical Support Center
1-800-522-6752
www.tycoelectronics.com

Product Facts

- **Cost-effective shielded connector for data, communication and medical system interconnections**
- **Plug has insulation displacement contacts for mass termination of cable for 28 to 24 AWG [0.08 to 0.2 mm²] 7-strand wire**
- **Integral wire guidance system provides effortless conductor indexing and seating prior to mass termination of the plug (round cable only)**
- **Durability, 3000 cycles**
- **Available in 4, 6, 8 and 16 position plug and receptacle styles**
- **Compatible with shielded flat, round and coiled cables**
- **Plug supplied with preloaded contacts on .050 [1.27] centerlines**
- **Variety of keying options available for each size**
- **Dual strain reliefs—one for conductors and one for the cable jacket**
- **Low insertion force receptacle design**
- **Plug and receptacle assemblies and most cable assemblies are recognized under the Component Program of Underwriters Laboratories Inc. and are certified by the Canadian Standards Association**

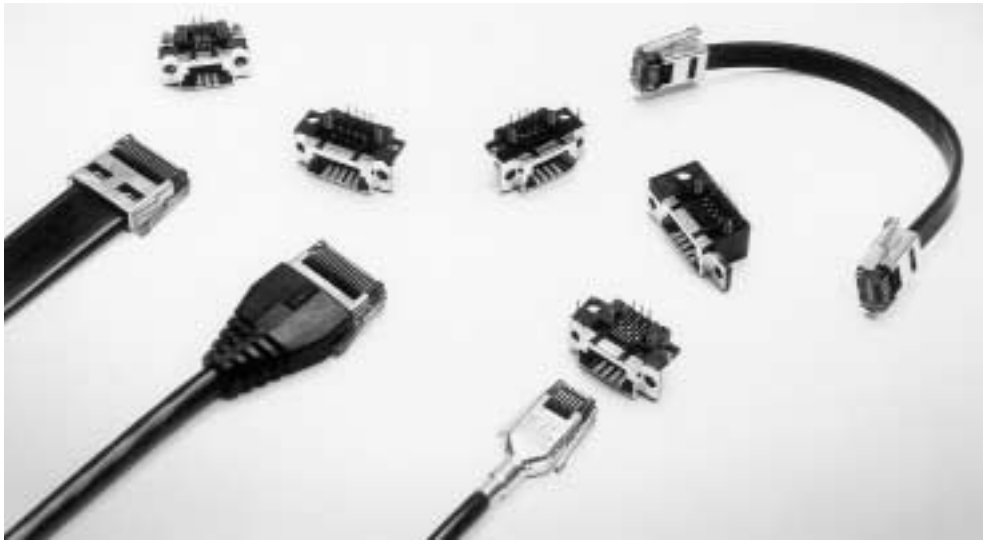

The SDL (Shielded Data Link) connector meets industry's demand for a cost-effective shielded connector. This connector provides EMI/RFI protection for a wide range of applications from critical medical systems to point-of-sale equipment, including computers, computer peripherals, video games and process control equipment. This connector is also compatible with flat, round and coil cables that use 28 to 24 AWG [0.08 to 0.2 mm²] 7-strand wire.

The SDL plug can be mass terminated using a proven reliable insulation displacement wire termination technique. Mass termination dramatically reduces the labor cost of attaching a connector to a cable. Design enhancements have yielded effortless wire indexing and seating prior to the mass termination.

The SDL connector mates smoothly and effortlessly because of its low force contact design. It locks in place with a tactile feel and an audible click which is caused by the action of the two plastic latches.

Each connector size is available with a choice of several standard molded-in keying arrangements. The geometry of the plug and receptacle eliminates the possibility of inserting the plug upside down.

The gold-to-gold contact configuration of the SDL connector has been proven in the data systems and telecommunications markets after years of successful service.

Need more information?

Call the Technical Support Center:
1-800-522-6752

The Technical Support Center is staffed with specialists well versed in all AMP products. The Center can provide you with:

- Engineering Support
- Catalogs
- Technical Documents
- Product Samples
- AMP FAX Service—Product Information faxed to you immediately
- Authorized Distributor Locations

Performance Specifications:

Current/Voltage Rating —
30 VAC/42 VDC at 1.5 amps max.

Operating Temperature —
–20°C to +80°C

Shielding Effectiveness —
20 dB min. from 30 MHz to 500 MHz and 10 dB min. from 500 MHz to 1 GHz

Mating Force —
8.5 lbs [37.81 N] max.

Unmating Force —
7 lbs [31.14 N] max.

Current Cycling —
500 min.

Note: Above testing was conducted utilizing an 8-conductor flat aluminum, polyester shielded cable.

For complete product information, order Catalog 82101

Plug Assemblies for Flat Cables

50 Series Plug Assemblies for Flat Cable (24 AWG or 26 AWG [0.2 mm² or 0.12-0.15 mm²] Cable)

Material and Finish:

Housings—Smoke gray, polycarbonate, 94V-2 rated

Contacts—Copper alloy, plated .000050 [0.00127] min. gold on mating area over nickel underplating

Shield—Copper alloy, plated bright tin-lead

Cable Requirements

These parts are for termination of flat cable with individual conductor insulation diameters of .045/.050 [1.14/1.27] (50 Series).

For Cable Preparation and Material Restrictions see Application Specification 114-2086.

Recognized under the Component Program of Underwriters Laboratories Inc. File No. E28476

Certified by Canadian Standards Association File No. LR35510

Application Tooling

Die sets for connectors listed in the table on the next page fit into the following:

Hand Tool Frame Number 58194-1

Pneumatic Machine Number 312522-1

(Requires Die Holder Number 58201-1)

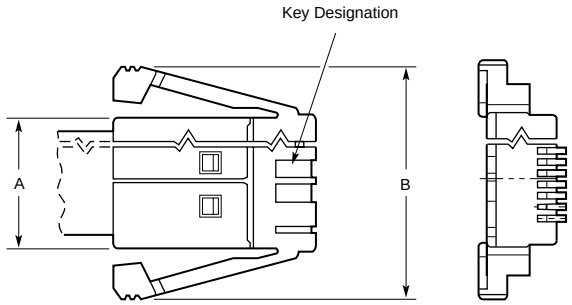

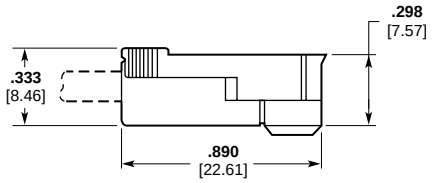

Note: One plug assembly required for each flat cable termination.

Number of Conductors	Dimensions A	Dimensions B	Key[1]	Part Numbers[2]	Die Sets for Connectors
4	**.375** 9.52	**.664** 16.87	A	1-520423-1	58261-1
			C	3-520423-1	

[1] Other keying options are available; contact Tyco Electronics for information.
[2] Prefix number of plug assemblies designates key configuration. Suffix number of plug assemblies is a code for the number of conductors. Prefix and suffix numbers of plug assemblies must match prefix and suffix numbers of the intended mating receptacles. Keys are molded in as an integral part of the plug and receptacle.

Plug Assemblies for Round Cable

50 Series (24 AWG or 26 AWG [0.2 mm² or 0.12–0.15 mm²]) Plug Components for Round Cable

Material and Finish:

Housing—smoke gray, polycarbonate, 94V-2 rated

Contacts—Copper alloy, plated .000050 [0.00127] min. gold on mating area over nickel underplating

Shield—Steel, plated bright tin

Cable Requirements

These parts are for termination of round cable with individual conductor insulation diameters of .045/.050 [1.14/1.27] (50 Series) or .035/.038 [0.89/0.97] (36 Series).

For Cable Preparation and Material Restrictions see Application Specification 114-2090.

Recognized under the Component Program of Underwriters Laboratories Inc. File No. E28476

Certified by Canadian Standards Association File No. LR35510

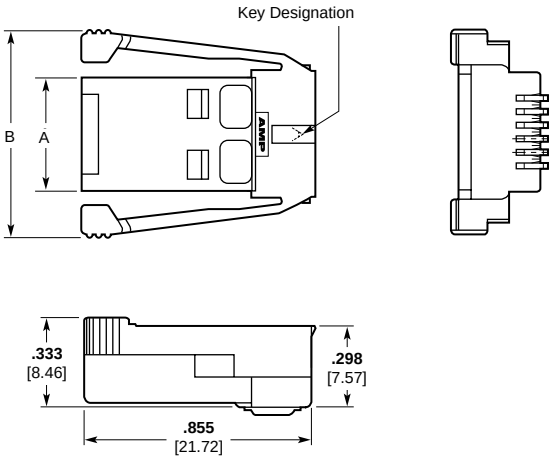

Boot (for round cable only)

(Slides over cable and completed plug assembly)

Material

Thermoplastic rubber, black or gray

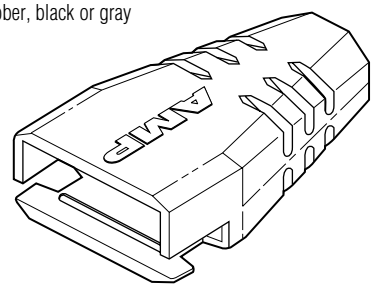

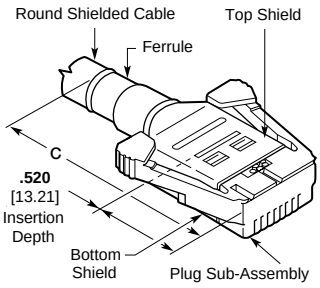

Note: Plug sub-assembly—top shield, bottom shield and ferrule are required for each round cable termination.

Application Tooling

Die sets for connectors and ferrules listed in the table below fit into the following

Hand Tool Frame Number 58194-1

Pneumatic Machine Number 312522-1 (Requires Die Holder Number 58201-1)

Number of Conductors	Dimensions A	B	C	Key[1]	Part Numbers[2] Sub-assemblies 50 Series	36 Series	Die Sets for Connectors	Top Shield	Bottom Shield	Ferrule	Die Sets for Ferrules	Boot	Cable O.D.
6	**.440** 11.18	**.764** 19.41	**1.670** 42.42	A	1-520424-2	—	58195-2	520462-1	520463-1	—	—	520852-1	—
				C	943010-2	—				520435-1	1-58166-1	943013-2	**.211–.225** 5.36–5.73
8	**.540** 13.72	**.864** 21.95	**1.850** 46.99	A	1-520424-3	1-520532-3	58195-3	520464-1	520465-1	520436-1	58166-5	520853-1	**.179–.212** 4.55–5.38
				C	3-520424-3	3-520532-3				520437-1	1-58166-2		**.224–.244** 5.69–6.20
16	**.940** 23.88	**1.264** 32.11	**2.020** 51.31	A	1-520424-6	—	58195-6	520466-1	520467-1	520440-1	58166-7	520854-1	**.229–.272** 5.82–6.91
										520441-1	1-58166-3		**.288–.308** 7.32–7.83

[1] Other keying options are available; contact Tyco Electronics for information.
[2] Prefix number designates key configuration. Suffix number is a code for the number of conductors. Prefix and suffix numbers of plug assemblies must match prefix and suffix numbers of the intended mating receptacles. Keys are molded in as an integral part of the plug and receptacle.
[3] Connector for Medical Information Bus (M.I.B.). Special polarization will not mate with standard product. Mates with No. 943013-2 only.

Side Entry Receptacles

Panel Ground and PCB Ground

Material and Finish

Contacts—Copper alloy, plated .000050 [0.00127] min. gold on mating area with tin-lead plated solder tails over nickel underplating on entire contact

Shield—Copper alloy, plated bright tin-lead

Housing—Black, polyester or polysulfone, 94V-0 rated

Recognized under the Component Program of Underwriters Laboratories Inc.
File No. E28476

Certified by Canadian Standards Association
File No. LR35510

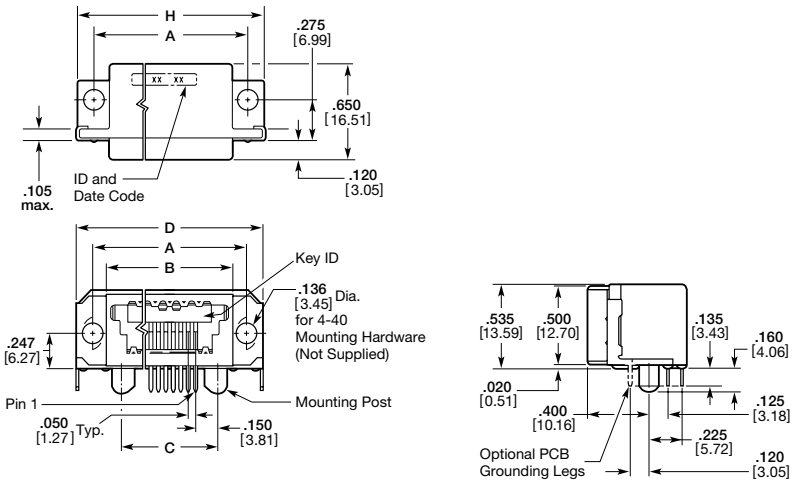

Number of Conductors	Dimensions A	B	C	D	H	Key[1]	Part Numbers[2] Side Entry Panel Ground	Side Entry PCB Ground
4	**.850**	**.659**	**.450**	**1.100**	**1.050**	A	—	1-520459-1
	21.59	16.74	11.43	27.94	26.67	E	—	5-520459-1
6	**.950**	**.759**	**.550**	**1.200**	**1.150**	A	—	1-520459-2
	24.13	19.28	13.97	30.48	29.21	—	—	943013-2[3]
8	**1.050**	**.859**	**.650**	**1.300**	**1.250**	A	—	1-520459-3
	26.67	21.82	16.51	33.02	31.75	C	—	3-520459-3
16	**1.450**	**1.259**	**1.050**	**1.700**	**1.650**	E	5-520421-6	—
	36.83	31.98	26.67	43.18	41.91			

[3] Connector for Medical Information Bus (M.I.B.) special polarization–will not mate with standard product. Mates with Number 943010-2 only.

Side Entry Boardlock Receptacles, Panel Ground and PCB Ground

Material and Finish

Contacts—Copper alloy, plated .000050 [0.00127] min. gold on mating area with tin-lead plated solder tails over nickel underplating on entire contact

Shield—Copper alloy, plated bright tin-lead

Housing—Black, polyester or polysulfone, 94V-0 rated

Recognized under the Component Program of Underwriters Laboratories Inc.
File No. E28476

Certified by Canadian Standards Association
File No. LR35510

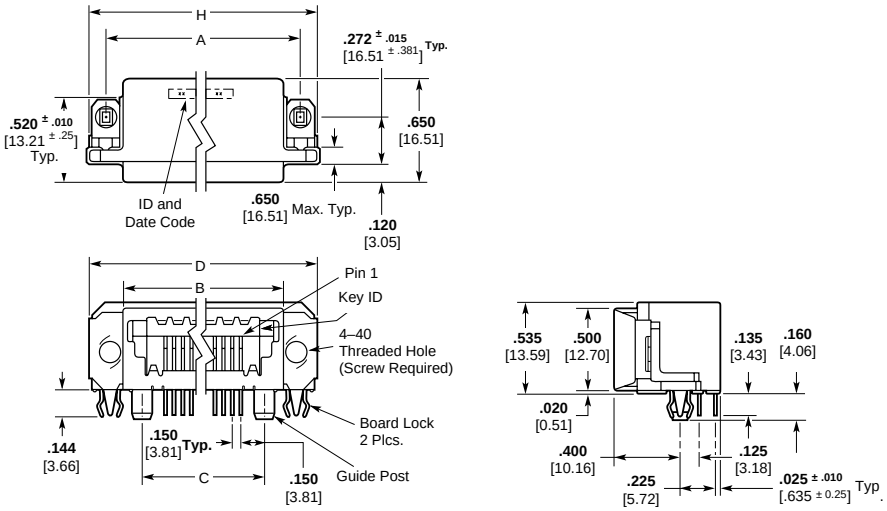

Number of Conductors	Dimensions A	B	C	D	H	Key[1]	Part Numbers[2]
4	**850**	**.660**	**.450**	**1.100**	**1.050**	D	4-943036-1
	21.59	16.76	11.43	27.94	26.67	E	5-943036-1
8	**1.050**	**.860**	**.650**	**1.300**	**1.250**	A	1-943036-3
	26.67	21.84	16.51	33.02	31.75		
16	**1.450**	**1.260**	**1.050**	**1.700**	**1.650**	A	1-943036-6
	36.83	32.00	26.67	43.18	41.91		

[1] Other keying options are available; contact Tyco Electronics for information.
[2] Prefix number designates key configuration. Suffix number is a code for the number of conductors. Prefix and suffix numbers of plug assemblies must match prefix and suffix numbers of the intended mating receptacles. Keys are molded in as an integral part of the plug and receptacle.
Notes 1 and 2 apply to above chart also.

For complete product information, order Catalog 82101

Products for Industrial & Commercial Applications
Dimensions are shown for reference purposes only.
Dimensions are in inches and millimeters unless otherwise specified. Values in brackets are metric equivalents.
Specifications subject to change.
Technical Support Center
1-800-522-6752
www.tycoelectronics.com

Top Entry Receptacles

Panel Ground

Material and Finish

Contacts—Copper alloy, plated .000050 [0.00127] min. gold on mating area with tin-lead plated solder tails over nickel underplating on entire contact

Shield—Copper alloy, plated bright tin-lead

Housing—Black, polyester or polysulfone, 94V-0 rated

Recognized under the Component Program of Underwriters Laboratories Inc.
File No. E28476

Certified by Canadian Standards Association
File No. LR35510

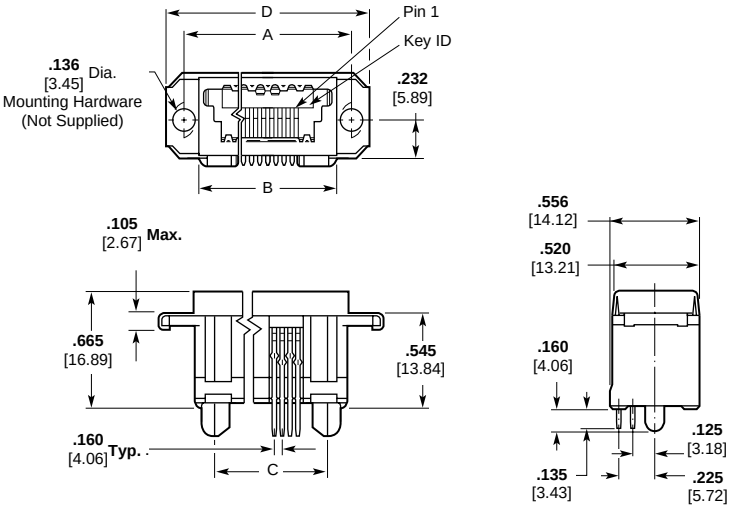

Number of Conductors	Dimensions				Key[1]	Part Numbers[2]
	A	B	C	D		
4	**.850** 21.59	**.660** 16.76	**.450** 11.43	**1.100** 27.94	A	1-520422-1
					D	4-520422-1
					E	5-520422-1
6	**.950** 24.13	**.760** 19.30	**.550** 13.97	**1.200** 30.48	E	5-520422-2
8	**1.050** 26.67	**.860** 21.84	**.650** 16.51	**1.300** 33.02	C	3-520422-3
					E	5-520422-3
16	**1.450** 36.83	**1.260** 32.00	**1.050** 26.67	**1.700** 43.18	A	1-520422-6

[1] Other keying options are available; contact Tyco Electronics for information.
[2] Prefix number designates key configuration. Suffix number is a code for the number of conductors. Prefix and suffix numbers of plug assemblies must match prefix and suffix numbers of the intended mating receptacles. Keys are molded in as an integral part of the plug and receptacle.

Product Facts

- **Compact size, same envelope dimension for all sizes — 4 through 8**
- **Available in stacked configurations**
- **Stacked visual keying available**
- **Right-angle and vertical receptacles incorporate one-piece shield for excellent shielding effectiveness**
- **Polarized and keyed to prevent mismating**
- **Housings made of 94V-0 rated thermoplastic, IR reflow compatible**
- **Right-angle receptacles compatible with robotic pick-and-place assembly**
- **Receptacles with fully formed socket contacts with proven retention system**
- **Receptacles accept plug connectors with or without latches**

Commercial Approvals

- **Recognized under the Component Program of the Underwriters Laboratories Inc., File No. E28476**
- **Certified by Canadian Standards Association File No. LR 7189**
- **Produced under a Quality Management System certified to ISO 9001**

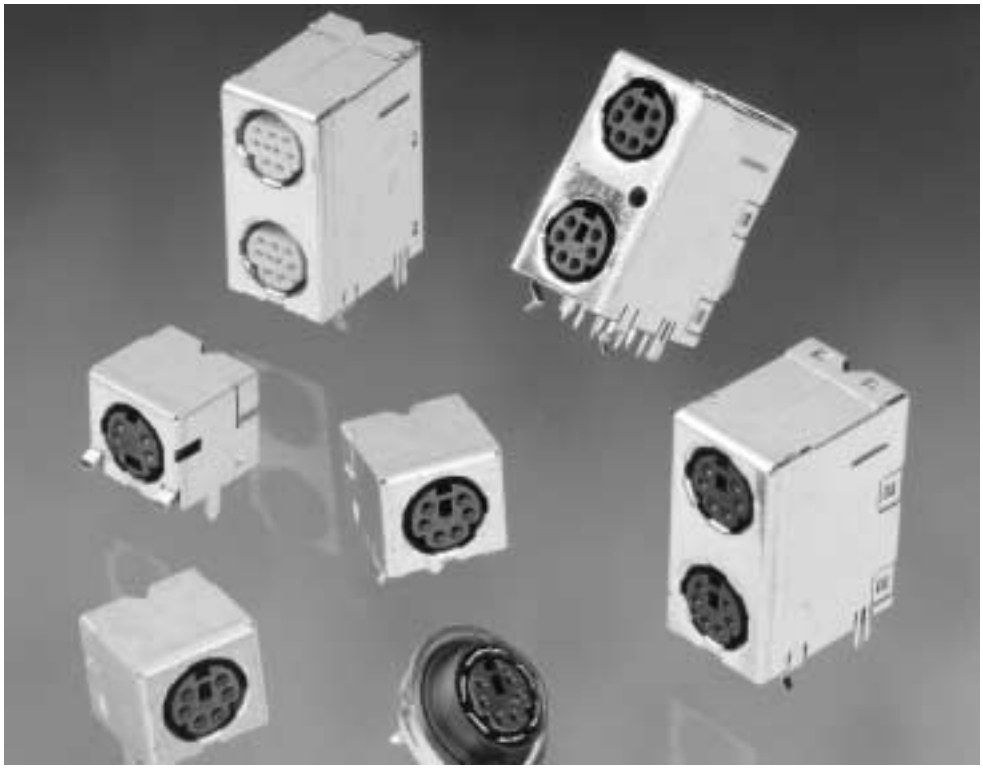

Shielded Miniature Circular DIN printed circuit board receptacles are ideal I/O connectors where board real estate is at a premium.

Miniature Circular DIN, pcb thru-hole receptacles are available in a choice of right-angle or vertical mount designs.

Right-angle receptacles are designed for automated assembly. They incorporate registration notch controlled datum surfaces and contact locations needed for robotic pick-up and placement. The housings, made of 94V-0 rated material, are designed to withstand the rigors of IR reflow soldering. The right-angle design incorporates a one-piece copper alloy shield and features optional front panel grounding fingers which ensure direct grounding.

Super VHS Shields are available — contact Tyco Electronics.

Thru-hole contacts are tin-lead plated for easy soldering, while the receptacle's stand-off design prevents shield damage to the pc board traces, and enhances cleaning after soldering.

Vertical mount receptacles are offered in unshielded and two shielded configurations — with or without front panel screw-down.

Performance Specifications:

Voltage Rating — 30 VAC rms, or 30 VDC

Current Rating — 1 ampere, max.

Dielectric Withstanding Voltage — 500 VAC rms

Termination Resistance — 30 milliohms, max.

Mating Force — 9 lbs [40 N], max.

Unmating Force — 2 lbs [8.9 N], min.

Durability — 100 mating cycles for gold flash plating
250 mating cycles for .000015 [0.00038] gold plating
500 mating cycles for .000030 [0.00076] gold plating

Application Temperature — Max. 255˚C for 4 min.

Operating Temperature Range — -55°C to +105°C

For complete product information, order Catalog 82212

Right-Angle Board-Mount Receptacles, Thru-Hole

Material and Finish:

Housing — Thermoplastic, 94V-0 rated, black

Contacts — Copper alloy, duplex plated as follows:

A — Gold flash in mating area, .000120 [0.00305] min. tin-lead on solder tail, all over .000050 [0.00127] min. nickel underplating

B — .000030 [0.00076] gold min. in mating area, .000120 [0.00305] min. tin-lead on solder tail, all over .000050 [0.00127] min. nickel underplating

Shield — Copper alloy, plated .000059 -.000158 [1.50-4.00µm] thick bright tin

Technical Documents:

Product Specification
108-1225

Application Specification
114-40031

Notes:

1. Recommended pc board thickness is .062 [1.57].

Part Number 749231-1



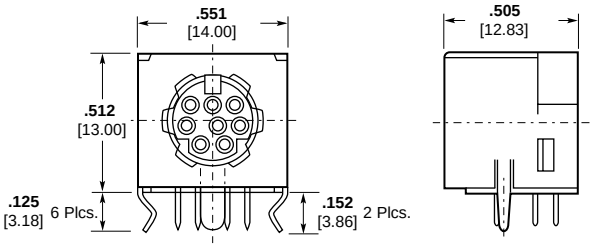

With Hold-Down

Part Number 749265-1



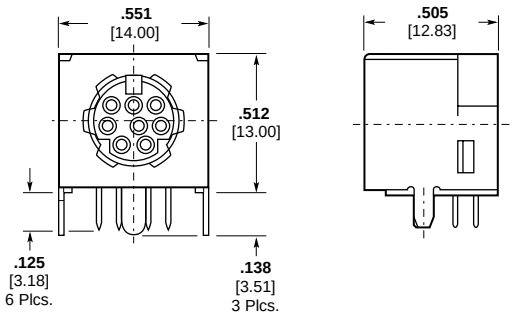

Without Hold-Down

Part Number 750071-1



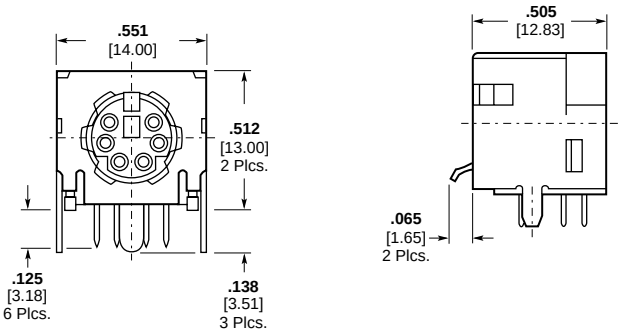

Without Hold-Down With Front Panel Grounding Finger

No. of Positions	Duplex Plating Code	Part Numbers		
		With Hold-Down	Without Hold-Down	With Front Panel Grounding Fingers
4	A	749230-1	—	—
	B	749181-1	749264-1	750069-1[1]
5	B	749274-1	—	—
6	A	749231-1	749265-1	—
	B	749180-1	749266-1	750071-1[1]
7	B	—	749270-1	—
8	A	749232-1	749268-1	—
	B	—	—	750073-1[1]

[1] This connector ensures grounding to the front panel when the gap between the pc board edge and the panel is no greater than .060 [1.52].

For complete product information, order Catalog 82212

6-Position Over 6-Position Stacked Receptacles, Thru-Hole

Material and Finish:

Housing — Thermoplastic, 94V-0 rated, black

Contacts — Copper alloy, duplex plated

A — .000030 [0.00076] gold min. in mating area, .000120 [0.00305] min. tin-lead on solder-tail, all over .000050 [0.00127] min. nickel underplating

Shield — Copper alloy, plated .000100 [0.00254] min. tin-lead over .000030 [0.00076] min. nickel

Technical Documents:

Product Specification
108-51010

Application Specification
114-51004

Notes:

1. Recommended pc board thickness is .062 [1.57].

Part Number 786580-1

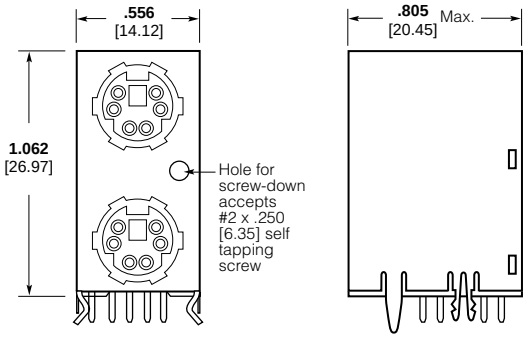



Part Number 84405-1

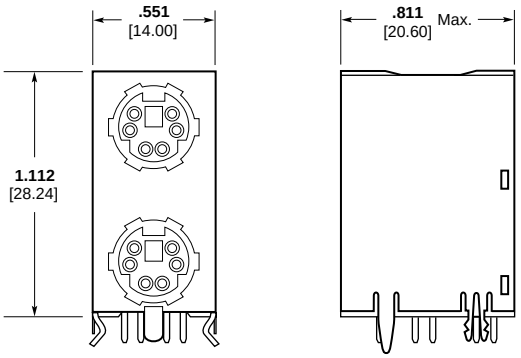



For complete product information, order Catalog 82212

Products for Industrial & Commercial Applications
Dimensions are shown for reference purposes only.
Dimensions are in inches and millimeters unless otherwise specified. Values in brackets are metric equivalents.
Specifications subject to change.
Technical Support Center
1-800-522-6752
www.tycoelectronics.com

Vertical Mount Receptacles, Thru-Hole

Material and Finish:

Housing — Thermoplastic, 94V-0 rated, black

Outer Shield — Copper alloy, plated .000100 [0.00254] min. tin-lead over .000100 [0.00254] min. copper

Inner Shield — Copper alloy, plated .000100 [0.00254] min. tin-lead over .000050 [0.00127] min. nickel

Contacts — Copper alloy, duplex plated as follows:

B — .000030 [0.00076] gold min. in mating area, .000050 [0.00127] min. nickel underplating

C — .000015 [0.00038] gold min. in mating area, .000120 [0.00305] min. tin-lead on solder tail, all over .000050 [0.00127] min. nickel underplating

Technical Documents:

Product Specification
108-1225

Application Specification
114-40031

Notes:

1. Recommended pc board thickness is .062 [1.57].

Part Number 750337-2



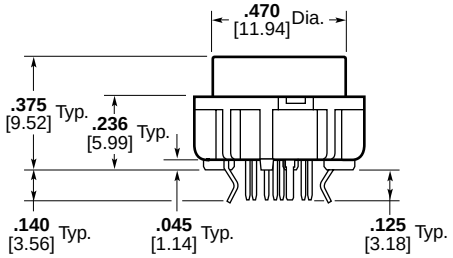

Unshielded

Part Number 750329-2



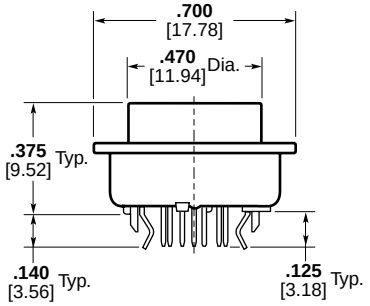

Shielded

Part Number 750131-2



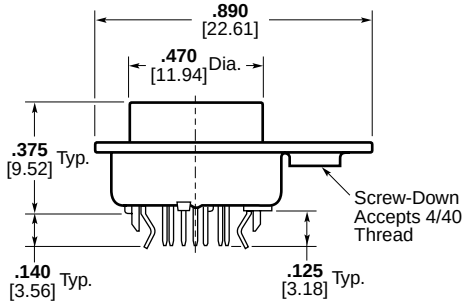

Shielded with Front Panel Screw-Down

No. of Positions	Duplex Plating Code	Part Numbers		
		Unshielded	Shielded	Shielded With Front Panel Screw-Down
4	C	750315-1	750317-1	—
	B	750315-2	—	750319-2
6	C	750327-1	—	—
	B	750327-2	750329-2	750131-2
	B	—	—	750730-2*
8	C	—	750338-1	—
	B	750337-2	—	750340-2

* Screw-Down hole aligns with polarization key on side closet to key.

For complete product information, order Catalog 82212

Products for Industrial & Commercial Applications
Dimensions are shown for reference purposes only.
Dimensions are in inches and millimeters unless otherwise specified. Values in brackets are metric equivalents.
Specifications subject to change.
Technical Support Center
1-800-522-6752
www.tycoelectronics.com

Product Facts

- **True mass displacement termination of jacketed cable with tinsel, solid or stranded conductors**
- **Available for round or flat oval cable**
- **One-piece construction with preloaded contacts**
- **FCC and EIA/TIA industry standard size and performance**
- **Selectively gold plated terminals**
- **Plugs supplied in loose piece form, some available in strip form**
- **Various positions and housing styles available**
- **Semiautomatic and manual termination capabilities**
- **Recognized by Underwriters Laboratories Inc., File No. E81956**
- **Certified by Canadian Standards Association Certificate No. LR 7189A**
- **Produced under a Quality Management System certified to ISO 9001**

A copy of the certificate is available upon request

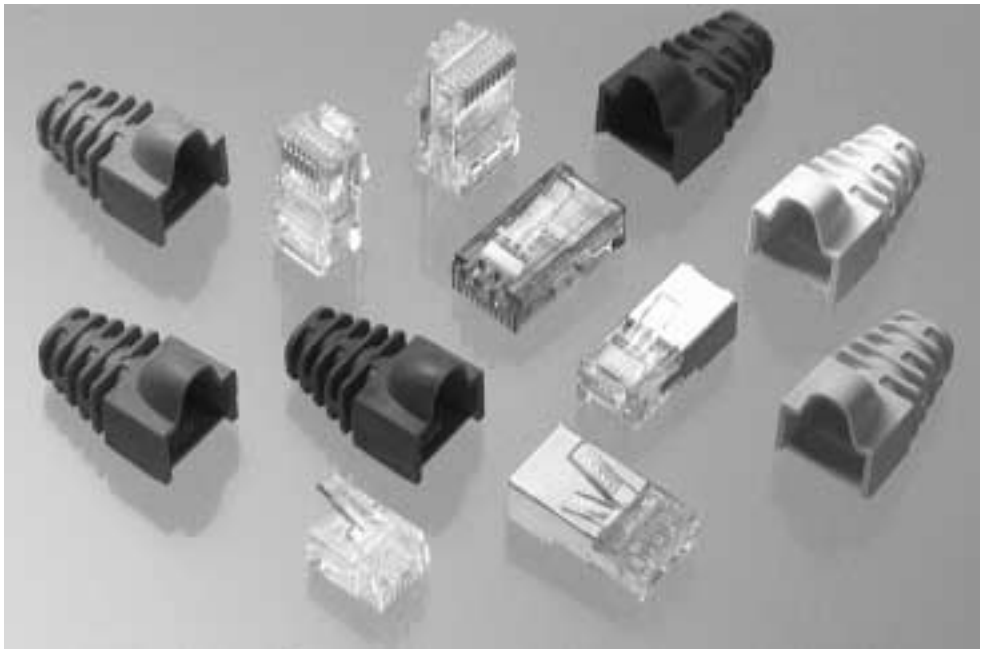

Photo-109887

The Modular Plugs consist of unshielded and shielded varieties. They offer compact size, high reliability and will meet FCC Rules and Regulations, Part 68; and the high performance Category 5 plugs exceed TIA/EIA-568A requirements.

Mass termination of the plugs provide a low applied cost. A variety of application tooling is available.

Modular Plugs accommodate both single or multicore tinsel, solid and stranded wire for telephone or non-telephone applications. Modular Plugs are produced and sold under license from AT&T and mate with FCC accepted jacks, shielded or unshielded.

Application Tooling for Modular Plugs is available in a wide variety from hand tools to more sophisticated automated tools. These tools give fast and accurate termination of Modular Plugs onto cable.

Specifications:

Electrical:

Applications — 150 VAC max. at 15 A @ 25°C, derated to 2A @ 70°C

Dielectric Withstanding Voltage — 1000 Volts AC

Insulation Resistance — 500 Megohms

Mechanical:

Cable-to-Plug Tensile Strength — 17 lbs [76N] min.

Durability — 750 mating cycles

Temp. Rating — 40˚ C to +60˚ C

Material and Finish:

Housing — Polycarbonate, UL 94V-0 Flammability Rating

Terminal —.014 [.36] thick, phosphor bronze; underplated with 100 µin Nickel, and plated with 50 µin Gold in contact region and gold flash on remainder of terminal.

Technical Documents:

Product Specification
108-1163

For complete product information, order Catalog 1307282

Unshielded Modular Plugs

2-, 4-, 6-Position

Photo-109865-5

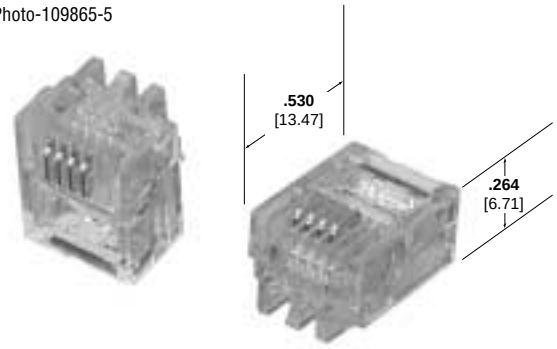

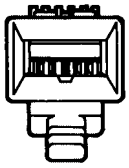

Flat Oval Cable

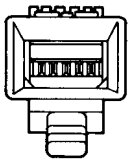

Round Cable

Description	Plug Part Numbers			
	10,000/Box	1,000/Box	100/Box	25/Bag
6/2-Position Flat Oval Stranded Line	—	5-641333-2	—	—
6/4-Position Flat Oval Solid Line	—	5-556384-2	5-556384-3	—
6/4-Position Flat Oval Stranded Line	5-641335-1	5-641335-2	5-641335-3	—
6/6-Position Flat Oval Solid Line	—	5-555042-2	5-555042-3	5-555042-4
6/6-Position Flat Oval Stranded Line	5-641337-1	5-641337-2	5-641337-3	—
6/6-Position Round Stranded Line	—	5-554710-2	5-554710-3	5-554710-4
6/6-Position Flat Oval Small Solid Conductor Line*	—	5-557970-2	—	—

*Small conductor products are for .029 - .034 [.737 - .864] OD conductors. Small Conductor product housings are tinted blue to differentiate from Standard Product.
Standard products cover .029 - .039 [.737 - .991] when a small conductor product does not exist.

6-Position Long Body

Photo-109865-4

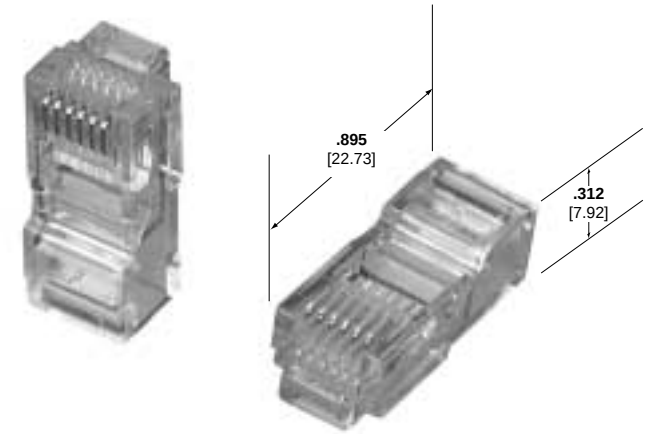

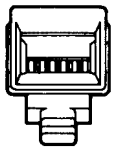

Flat Oval Cable

Description	Plug Part Numbers
	100/Box
6/6-Position Long Flat Oval Solid Line	5-555426-3
6/6-Position Long Flat Oval Stranded	5-555176-3

Note: 1. On any modular plug, Terminal No. 1 is the terminal to the extreme left as you face the cable opening, latch tab down.
2. For appropriate cable specifications and termination procedures, refer to Application Specifications 114-6016 & 114-6053

For complete product information, order Catalog 1307282

Unshielded Modular Plugs

8-Position

Photo-109865-2

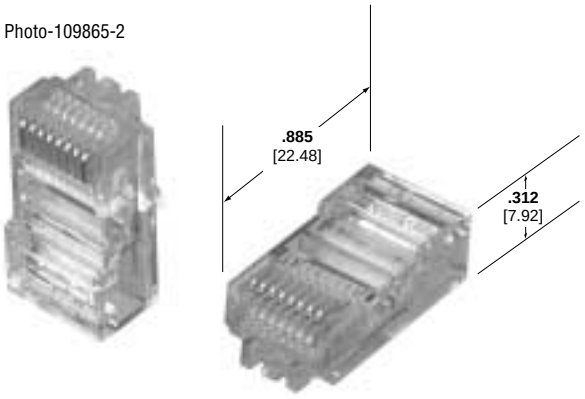

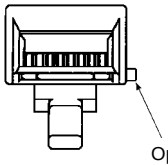

Flat Oval Cable

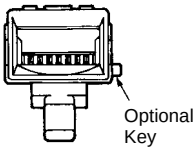

Round Cable

Description	Plug Part Numbers			
	10,000/Box	500/Box	100/Box	25/Bag
8/8-Position Flat Oval Solid	5-554720-1	5-554720-2	5-554720-3	5-554720-4
8/8-Position Flat Oval Stranded	5-554739-1	5-554739-2	5-554739-3	5-554739-4
8/8-Position Round Solid	—	5-557315-2	5-557315-3	5-557315-4
8/8-Position Round Stranded	5-554169-1	5-554169-2	5-554169-3	5-554169-4
8/8-Position Flat Oval Small Solid Conductor	—	5-557972-2	5-557972-3	—
8/8-Position Flat Oval Small Stranded	—	5-557973-2	—	—
8/8-Position Round Cable Small Stranded	5-557961-1	5-557961-2	—	—
8/8-Position Keyed Flat Oval Solid	—	5-555417-2	—	—
8/8-Position Keyed Flat Oval Stranded	—	5-554743-2	—	—
8/8-Position Keyed Round Stranded	—	—	5-554170-3	—

*Small conductor products are for .029 - .034 [.737 - .864] OD conductors. Small Conductor product housings are tinted blue to differentiate from Standard Product.
Standard products cover .029 - .039 [.737 - .991] when a small conductor product does not exist.

4-Position Handset

Photo-109865-7

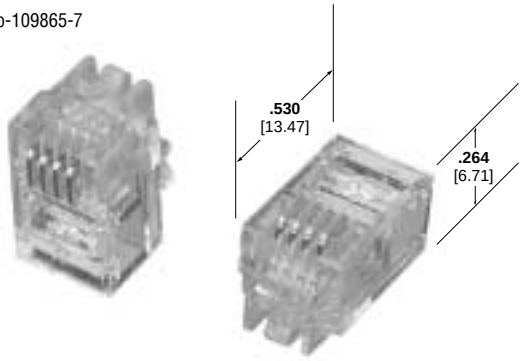

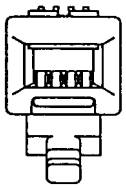

Flat Oval Cable

Description	Plug Part Numbers		
	1,000/Box	100/Box	25/Bag
4-Position Flat Oval Stranded	5-641334-2	5-641334-3	5-641334-7

For complete product information, order Catalog 1307282

Products for Industrial & Commercial Applications
Dimensions are shown for reference purposes only.
Dimensions are in inches and millimeters unless otherwise specified. Values in brackets are metric equivalents.
Specifications subject to change.
Technical Support Center
1-800-522-6752
www.tycoelectronics.com

Unshielded Modular Plugs

6-Position with Offset Latch

Photo-109865-6

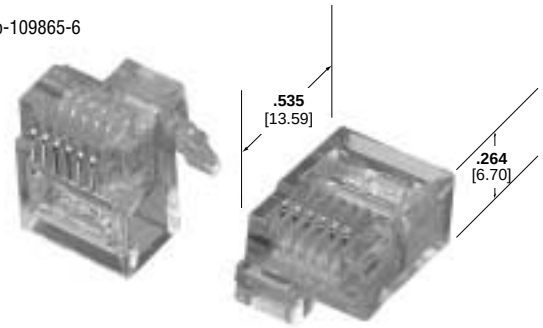

Description	Plug Part Numbers		
	1,000/Box	100/Box	25/Bag
6-Position Round Stranded Offset	—	5-555238-2	—
6-Position Flat Oval Solid Offset	—	5-555236-2	5-555236-3
6-Position Flat Oval Stranded Offset	5-555237-1	5-555237-2	5-555237-3

Note: Offset latch product conforms to FCC requirements except for latch location.

8-Position Long Body

Photo-109865-8

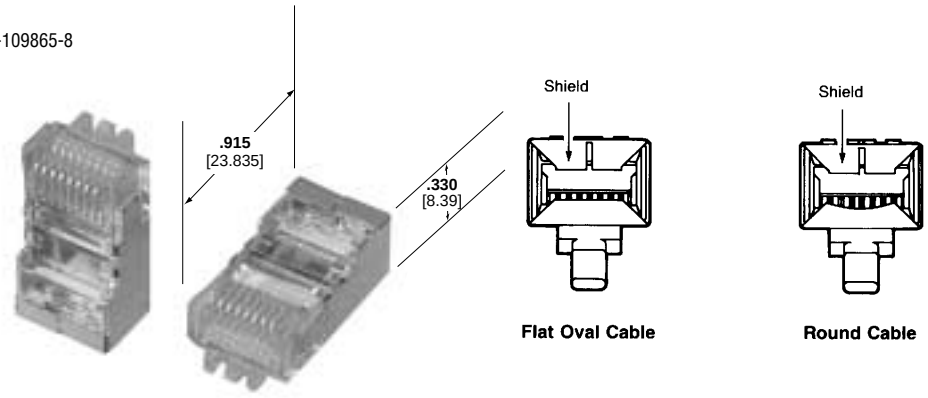

Description	Plug Part Numbers			
	Style	500 pcs/Box	100 pcs/Box	25 pcs/Bag
8/8-Position Small Stranded	Round Cable	5-406342-2	5-406342-3	—
8/8-Position Line, Stranded	Round Cable	5-569532-2	5-569532-3	—
8/8-Position Line, Solid	Round Cable	5-569530-2	5-569530-3	5-569530-4
8/4-Position Line, Stranded	Flat Oval Cable	5-569542-2	5-569542-3	—

For complete product information, order Catalog 1307282

High Performance Modular Plugs

UPDATED 11/01

Product Facts

- Exceeds EIA/TIA 568A and TSB-40A Requirements for Category 5, 4-Pair (RJ45) UTP Applications
- Utilizes a load bar for easier cable preparation and termination
- Load bar aids in maintaining 1/2" twist requirements
- Field or factory terminated
- For stranded or solid cable
- Quicker and easier terminations

Photo-109865-9

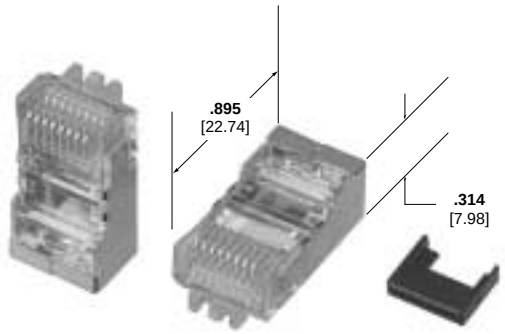

Description	Plug Part Numbers		
	500/Box	100/Box	25/Bag
8-Position, Unshielded, Stranded	5-558530-2	5-558530-3	5-558530-4
8-Position, Unshielded, Solid	5-569278-2	5-569278-3	5-569278-4
8-Position, Shielded, Stranded	5-569552-2	5-569552-3	5-569552-4
8-Position, Shielded, Solid	5-569550-2	5-569550-3	5-569550-4

For complete product information, order Catalog 1307282

Products for Industrial & Commercial Applications
Dimensions are shown for reference purposes only.
Dimensions are in inches and millimeters unless otherwise specified. Values in brackets are metric equivalents.
Specifications subject to change.
Technical Support Center
1-800-522-6752
www.tycoelectronics.com

Application Tooling for Modular Plugs

Economy Hand Tool

- Strips and terminates cable
- Light weight
- Low cost

Photo-70411A



Terminates	Economy Hand Tool
2-, 4- and 6-Position Plugs	231648-1
4-Position Handset Plugs	231649-1

Professional Hand Tool

- Cuts, strips and terminates cable
- Ratchet control provides complete termination cycle
- All plug sizes, except 10-Position, are accommodated using interchangeable die sets

Photo-89755-1

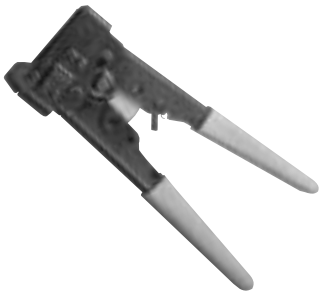

IS 408-9767

Terminating Tool w/ die	Corresponding Die Set		
	Description	Color	Die Numbers
2-231652-1 2-231652-2*	8-Position Line	Black	853400-1
2-231652-3	4-Position Handset	Green	853400-3
2-231652-6	6-Position Offset-Latch	Orange	853400-6
2-231652-7	6-Position Long Body	Violet	853400-7
2-231652-4* 2-231652-8	4-,6-Position Line	Blue	853400-8
3-231652-0 3-231652-1*	8-Position High Performance	White	1-853400-0

*Packaged in a clear, plastic clamshell for point-of-purchase display.

PRO-CRIMPER II Hand Tool

- Ratchet control provides complete termination cycle
- Die sets are interchangeable
- Contact insertion height easily adjusted

IS 408-4093 (for use with 10 position plugs only)



Photo-96179-1

Part Number 58560-1

Tool Assembly with Die Set

Part Number 58560-2

Die Set Only
Contact the Technical Support Center (1-800-522-6752) for specific modular plug part numbers.

Professional Hand Tool Kits

Photo-89756-2



Description	Kit Numbers
Carrying Case with Set of Replacement Strip Blades and Small Screwdriver	231666-9
Carrying Case with Frame, 4-, 6- and 8-Position Die Sets, Set of Replacement Strip Blades and Small Screwdriver	1-231666-0
Carrying Case with Frame, 4-Position Handset, 4-, 6- and 8-Position Die Sets, Set of Replacement Strip Blades and Small Screwdriver	1-231666-1
Blade Replacement Kit (5 cutter blades and 5 sets of strip blades)	231662-4
[1] Cutter Blade	856727-1
[1] Set of Strip Blades	231662-5

For complete product information, order Catalog 1307282

Products for Industrial & Commercial Applications
Dimensions are shown for reference purposes only.
Dimensions are in inches and millimeters unless otherwise specified. Values in brackets are metric equivalents.
Specifications subject to change.
Technical Support Center 1-800-522-6752 www.tycoelectronics.com

Application Tooling for Modular Plugs

Modular Plug Single Terminator

- Compact, low-cost, air-powered bench unit
- Interchangeable tooling for different size plugs
- Contact insertion height easily adjusted
- Up to 250 terminations per hour

IS 408-9919



Photo-91950-2

Plug Style	Tooling Kit (only shipped with terminator)	Terminator Numbers
NONE	—	354711-1
Line Plug	354714-1	354711-2
8-Position	354714-2	354711-3
Handset	354714-3	354711-4
Long Body	354714-4	354711-5
10-Position	354714-5	354711-6
6 Offset	354714-6	354711-7
8-Position High Performance	354714-7	354711-8

Modular Plug Dual Terminator

- Tests both ends for shorts and opens
- Can be programmed to test individual positions and crossovers
- Terminates up to 200 dual-ended cables per hour

IS 408-9743



Power Unit/Tester Tool No. 1320840-1 (-2, CE Approved) (termination modules ordered separately; see chart below)

Termination Module

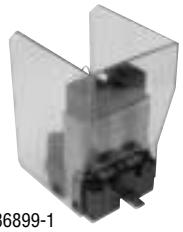

Photo-86899-1

Modular Plug Applied	Termination Module
4- and 6-Position Line	856196-1
8-Position Long Body	856196-2
4-Position Handset	856196-3
6-Position Long Body	856196-4
6-Position Offset	856196-5
8-Position High Performance	1-856196-1

AMP-O-LECTRIC Termination Machine Model "G"

Part Number 354500-1

Refer to tooling section for specific information on AMP-O-LECTRIC machine

Modular Plug Applicators

Terminates	Applicator Part Numbers for Model "G"
2-Position Plugs	1-469268-4
4-Position Handset Plugs	1-469268-1
4-Position Plugs	1-469268-2
6-Position Plugs	1-469268-5
6-Position Offset Latch Plugs	1-469268-6

Note: [1] For flat cable only

For complete product information, order Catalog 1307282

Products for Industrial & Commercial Applications
Dimensions are shown for reference purposes only.
Dimensions are in inches and millimeters unless otherwise specified. Values in brackets are metric equivalents.
Specifications subject to change.
Technical Support Center
1-800-522-6752
www.tycoelectronics.com

Modular Jacks consist of single, multi-port, and high performance pc board mount jacks in shielded and unshielded varieties. They offer compact size, high reliability and meet FCC Rules and Regulations, Part 68. The housing materials are available in polyester for wave solder applications and high temperature Nylon, PCT or SPS for IR reflow applications. All housing materials are UL 94V-0 flame retardant. All shields consist of copper alloy base metal with tin-lead plating over copper underplate. All contacts are overall nickel plated phosphor bronze, with selectively plated gold in the contact area, and tin-lead in the solder area.

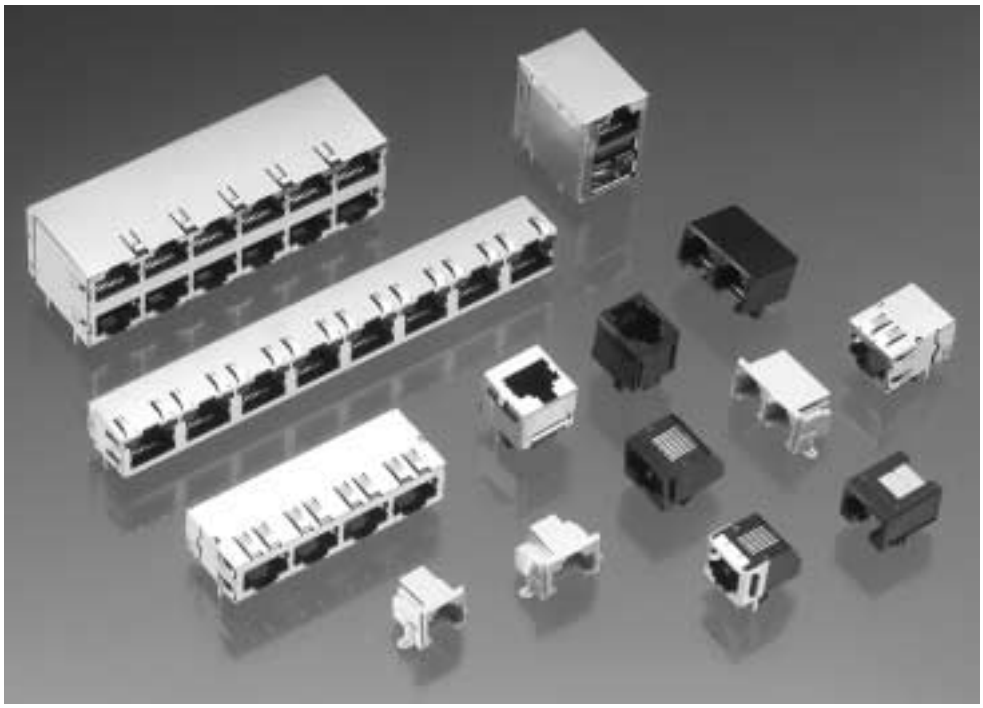

Photo 109381

Single Port Modular Jacks are available in both side or top entry and shielded or unshielded. The side entry additionally comes in a variety of heights from 17.4mm to 11.5mm. They are designed for direct mounting on pc boards and ease of soldering and board cleaning. The shielded mod jacks are available with and without panel grounds.

Multi-Port Modular Jacks are for applications requiring printed circuit board mounted, shielded and unshielded, ganged modular jacks. These 8-position right angle jacks incorporate an industry pc board footprint.

High Performance Modular Jacks exceed Near End Crosstalk (NEXT) requirements of -40dB at 100 MHz, on all 4-pair combinations and meet requirements of FCC, Part 68. They are available in single or multi-port configurations, shielded or unshielded. The need for customized printed circuit boards to achieve high performance is eliminated.

Single Port Modular Jacks

Product Facts

- **Meets or exceeds FCC Part 68 rules and regulations; REA PE-76; and UL 1863, Communication Circuit Accessories**
- **Meets 1000 volt dielectric requirement**
- **Available in both top and side entry**
- **Designed for direct mounting on pc boards**
- **Designed for ease of soldering and board cleaning**
- **Available in both shielded and unshielded versions**
- **Shielded jack available with two grounding paths - pc board and panel**
- **20 dB shielding effectiveness from 30 MHz to 400 MHz**
- **Selectively gold plated contacts for lower cost**
- **All jacks are UL 94V-0 flame retardant polyester, standard color black, unless specified otherwise**
- **Listed by Underwriters Laboratories Inc., File No. E81956**
- **Certified by Canadian Standards Association, File No. LR 7189A**
- **Produced under a Quality Management System Certified to ISO 9001**

  A copy of the certificate is available upon request

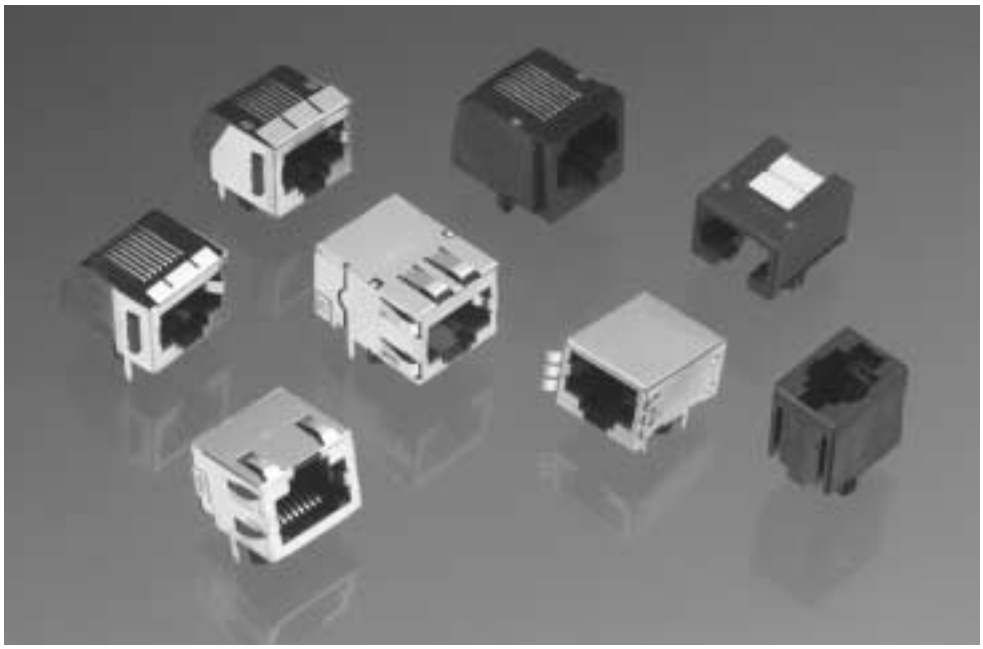

Photo 109387

Specifications:

Electrical:

Current Rating — 1.5 amp max. @ 25°C, derated to 0.2 amp max. @ 70°C ambient

Voltage Rating — 150 volts AC max.

Dielectric Withstanding Voltage — 1000 VAC, RMS, 60 Hz, 1 min.

Surge Test — to 1000 volts

Mechanical:

PC Board Retention — will not dislodge from pc board when subjected to 1 lb. [4.4N] pull before soldering and 10 lb. [44N] pull after soldering

Durability — 750 mating cycles

Material and Finish:

Housing — Through-hole: Polyester (wave solder compatible), UL 94V-0 rated; Surface Mount: Polyphenylene Sulfide, UL 94V-0 rated

Contact — .014 [0.36] thk. Phosphor bronze; plated .000050 [0.00127] gold in contact area and .000150 [0.00381] tin-lead on solder tails, over .000050 [0.00127] nickel underplate

Technical Documents:

Product Specification
108-01163

Application Specification
114-02048

Single Port Modular Jacks

Side Entry, Unshielded

17.4mm Height

8 Position

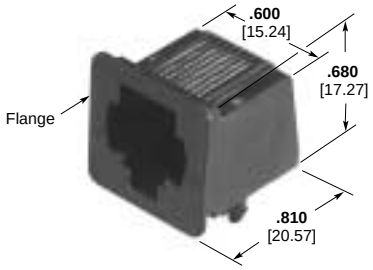

Photo 109319-7

Positions/Contacts	Flanged	Tray Packaging Part Numbers
4/4	Y	520241-2
6/4	Y	520242-2
6/6	Y	520242-3
8/8	Y	520243-4

16.2mm Height

4 Position

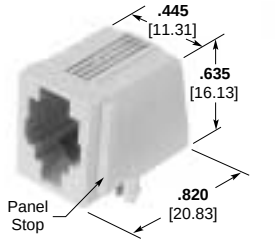

Photo 109321-2

6 Position

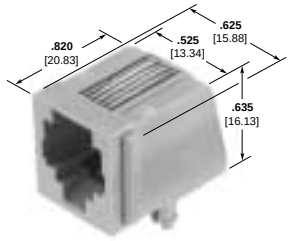

Photo 109321-3

8 Position

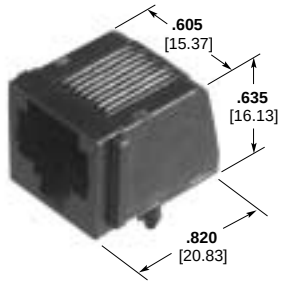

Photo 109319-4

Positions/Contacts	Panel Stops	Notes	Keyed	Tray Packaging Part Numbers
4/4	Y		—	520249-2
4/4	—		—	555980-1
6/2	Y		—	520250-1
6/2	—		—	520470-4
6/4	Y		—	520250-2
6/4	Y	Gray color	—	520250-4
6/4	—		—	555979-1
6/6	Y		—	520250-3
6/6	—		—	520470-3
6/6	Y	Off set latch, gray color	Y	555003-1
8/8	Y		—	520251-4
8/8	—		—	520426-4
8/8	Y		Y	520252-4
8/8	—		Y	554517-1

For complete product information, order Catalog 82066

Products for Industrial & Commercial Applications
Dimensions are shown for reference purposes only.
Dimensions are in inches and millimeters unless otherwise specified. Values in brackets are metric equivalents.
Specifications subject to change.
Technical Support Center
1-800-522-6752
www.tycoelectronics.com

Single Port Modular Jacks

Side Entry, Unshielded

13.4mm Height

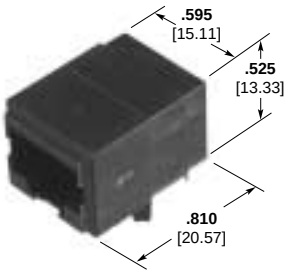

Photo 109319-5

Position/Contact	(IR) Reflow Compatible	Keyed	Tray Packaging Part Numbers
8/8	Y	—	557785-1
10/10	Y	—	558065-1
10/10	Y	Y	558066-1

12.6mm Height

6 Position

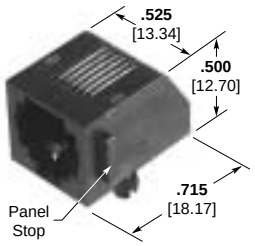

Photo 109319-9

8 Position

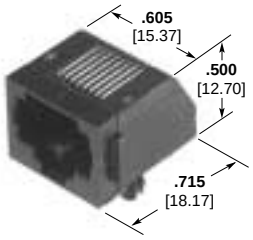

Photo 109320-2

Positions/ Contacts	(IR) Reflow Compatible	Panel Stops	Keyed	Notes	Tray Packaging Part Numbers	Tube Packaging Part Numbers
6/2	—	—	—		555165-5	—
6/4	—	Y	—		555163-2	—
6/4	—	—	—		555165-2	—
6/6	—	Y	—		555163-1	555163-4
6/6	Y	—	—		569026-1	—
6/6	—	—	—		555165-1	555165-4
8/8	—	Y	—		555162-1	—
8/8	—	—	—		555164-1	555164-4
8/8	—	Y	Y		555166-1	—
8/8	—	—	Y		555167-1	555167-3
8/8	Y	—	Y		569118-1	—
8/8	—	—	Y	0.110 solder tail length	—	555167-4

For complete product information, order Catalog 82066

Products for Industrial & Commercial Applications
Dimensions are shown for reference purposes only.
Dimensions are in inches and millimeters unless otherwise specified. Values in brackets are metric equivalents.
Specifications subject to change.
Technical Support Center
1-800-522-6752
www.tycoelectronics.com

Single Port Modular Jacks

Side Entry, Shielded

Low Profile, Face Shield

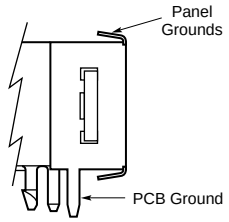

6 Position

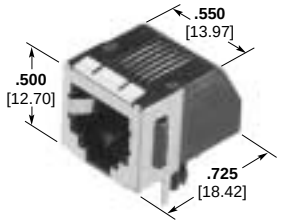

Photo 109320-1

8 Position

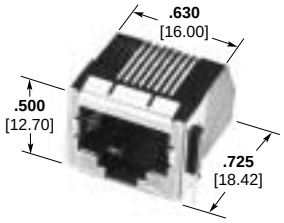

Photo 109264-8

Positions/ Contacts	(IR) Reflow Compatible	Panel Ground	Keyed	Notes	Tray Packaging Part Numbers	Tube Packaging Part Numbers
6/4	—	Y	—		555140-2	—
6/4	—	—	—		555154-2	—
6/6	—	—	—		555154-1	—
6/6	—	Y	—		555140-1	—
6/6	—	Y	—	0.100 solder tail length	555140-4	—
8/8	—	—	—		555153-1	555153-3
8/8	—	—	—	0.110 solder tail length	555153-5	—
8/8	—	—	—	0.090 solder tail length	555153-6	—
8/8	—	Y	—		555141-1	—
8/8	—	—	Y		556591-1	—
8/8	—	Y	Y	0.110 solder tail length	558382-1	
8/8	Y	—	—		406429-1	—
8/8	—	Y	—	Special shield, — .120 PCB ground	556926-1	—

Note: SHIELDED PRODUCT WITH PANEL GROUNDS ALWAYS CONTAINS PCB GROUNDS

Low Profile, Full Shield

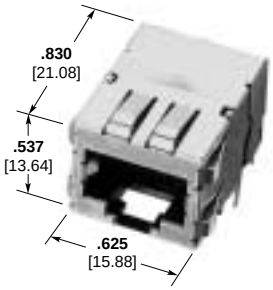

Photo 109264-3

Positions/ Contacts	(IR) Reflow Compatible	Panel Ground	PCB GRD LOC.*	Notes	Tray Packaging Part Numbers
8/8	Y	Y	0.180		1116614-1
8/8	Y	Reverse	-0.120		569942-1
8/8	Y	PCB Tabs Only	-0.120		406017-1
8/8	Y	PCB Tabs Only	-0.120	Keyed	558310-1

Note: SHIELDED PRODUCT WITH PANEL GROUNDS ALWAYS CONTAINS PCB GROUNDS
***Hole location varies among modular jack assemblies and is determined by the dimension from the center of the boardlock or guide pin mounting legs to the center of the shield tab solder tine. See page 1163.

Surface Mount, Inverted Latch

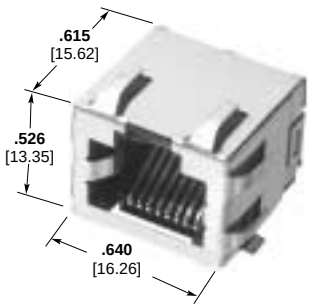

Photo 110731-1

Positions/ Contacts	(IR) Reflow Compatible	Panel Ground	Tape Packaging Part Numbers
6/6	Y	Y	1339212-1
8/8	Y	Y	1339160-1

For complete product information, order Catalog 82066

Single Port Modular Jacks

Top Entry

Unshielded

4 Position

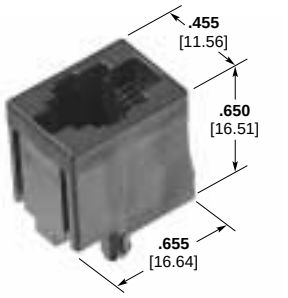

Photo 109864-5

6 Position

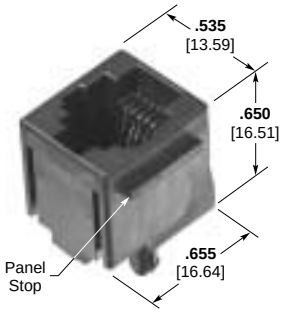

Photo 109864-4

8 Position

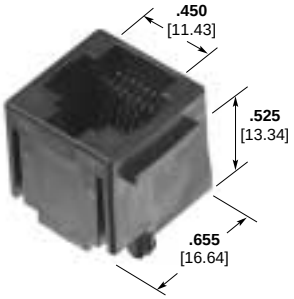

Photo 109864-3

Positions/ Contacts	(IR) Reflow Compatible	Panel Stops	Keyed	Notes	Tray Packaging Part Numbers	Tube Packaging Part Numbers
4/4	—	Y	—		520257-2	—
4/4	—	—	—		558872-1	—
6/4	—	—	—		520425-2	—
6/6	—	Y	—		520258-3	—
6/6	—	—	—		520425-3	—
6/6	—	Y	Y	Offset latch, gray color	554990-1	—
6/6	Y	—	—		569984-1	—
8/8	Y	—	—		569284-1	—
8/8	—	—	—		556416-1	556416-2
8/8	—	Y	—		520259-4	—
8/8	—	Y	Y		520260-4	—
8/8	—	—	Y		555799-1	—

Shielded

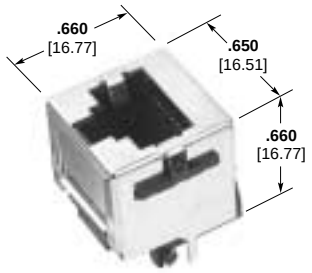

Photo 109864-7

Positions/Contacts	Keyed	Notes	Tray Packaging Part Numbers
8/8	—	Panel Stop .525 from PCB	557969-1
8/8	Y		557730-1
8/8	—	Panel Stop .241 from PCB	557484-1
8/8	—	0.120 solder tail length	557969-2
8/8	—	0.135 solder tail length	406436-1

Note: SHIELDED PRODUCT WITH PANEL GROUNDS ALWAYS CONTAINS PCB GROUNDS.
See Page 1163 Schematic.

For complete product information, order Catalog 82066

Multi-Port Modular Jacks

Product Facts

- **Meets or exceeds FCC Part 68 rules and regulations with standard pc board footprints**
- **Low profile and narrow width allow more ports to be packed into less space**
- **Unshielded and shielded versions in popular size configurations**
- **Positive connection throughout life of equipment with insert molded contacts**
- **Accurately positioned solder tails reduce assembly labor while selectively deposited gold plating results in lower cost**
- **Center mounting leg available on 8 port shielded and unshielded versions**
- **Available with two grounding paths; pc board & panel**
- **Listed by Underwriters Laboratories Inc., File No. E81956**
- **Certified by Canadian Standards Association, File No. LR 7189A**
- **Produced under a Quality Management System Certified to ISO 9001**

A copy of the certificate is available upon request

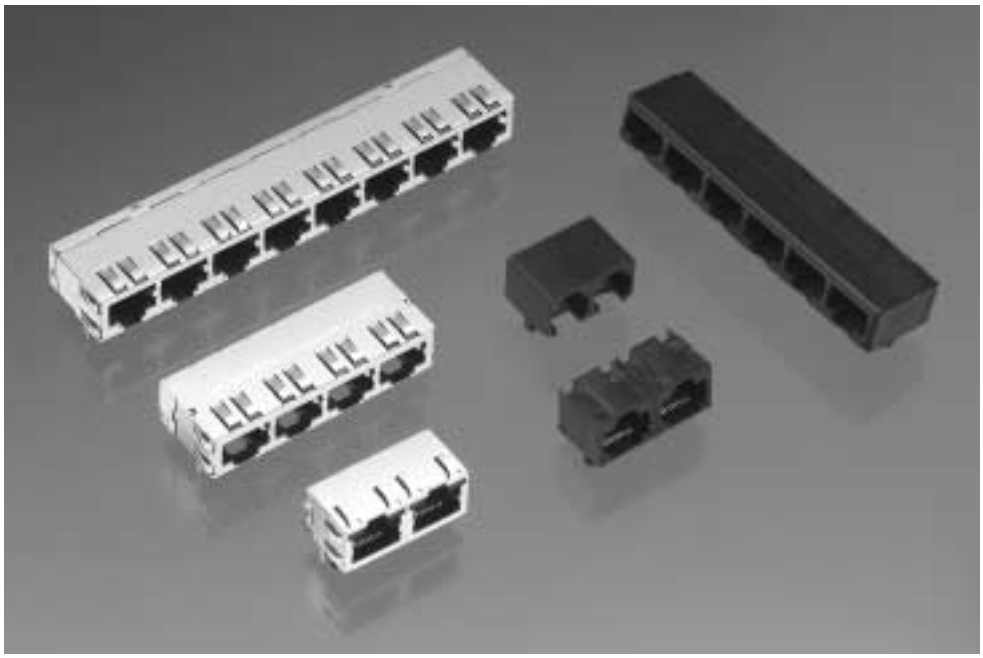

Photo 109383

Specifications:

Electrical:

Current Rating — 1.5 amp max. @ 25°C

Voltage Rating — 150 VAC max.

Dielectric Withstanding Voltage — 1000 VAC

Insulation Resistance — 500 megohms min.

Shielding Effectiveness — 20dB min., 10 to 200 MHz

Mechanical:

Durability — 750 mating cycles

Mating/Unmating Forces — 5 lbs. max.

Operating Temperature — 40°C to 70°C

Material and Finish:

Housing — High temperature nylon, black UL 94V-0 rated

Contact — .013 [0.33] Phosphor bronze; plated .000050 [0.00127] gold in localized area and .000150 [0.00381] tin-lead on solder tails, over .000050 [0.00127] nickel underplate

Shield — .010 [0.25] or .0077 [0.20] copper alloy tin-lead plated

Technical Documents:

Product Specification
108-01163

Application Specification
114-02048

Multi-Port Modular Jacks

Unshielded

Standard Latch

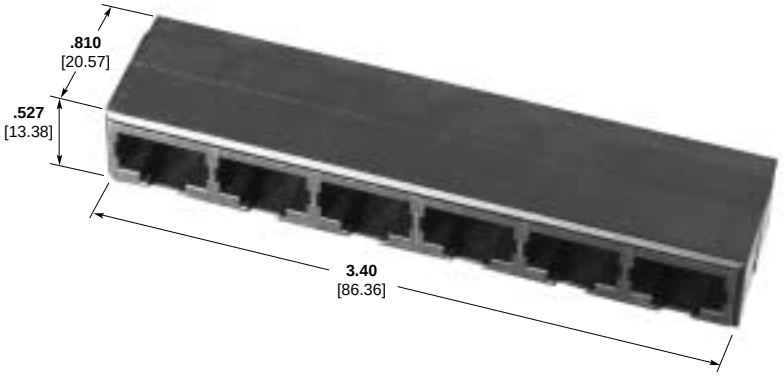

Photo 109265-6

No. of Ports	Positions/ Contacts	IR Reflow Compatible	Tray Packaging Part Numbers
1X2	8/8	Y	406014-1
1X4	8/8	Y	557562-1
1X5	8/8	Y	557563-1
1X6	8/8	Y	557564-1
1X8	8/8	Y	557566-1

Shielded Standard Latch

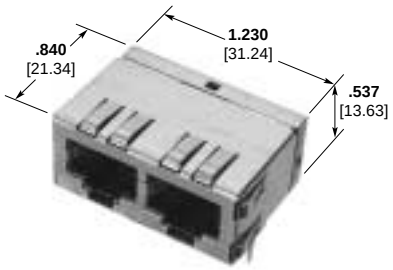

Photo 109263-2

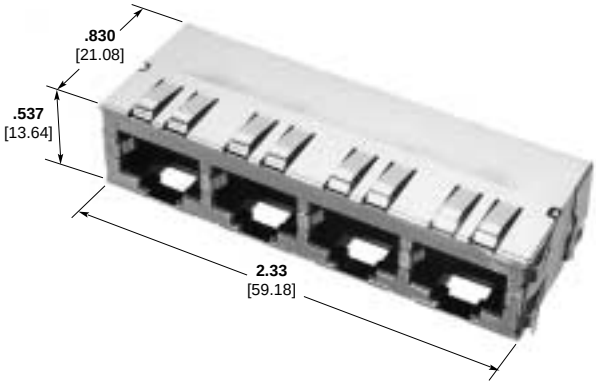

Photo 109262-7

No. of Ports	Positions/Contacts	Panel Ground	No. of Rear PCB Grounds	PCB Ground Location*	Tray Packaging Part Numbers
1X2	8/8	—	0	0.180	406016-2
1X2	8/8	—	1	0.180	406016-1
1X2	8/8	Y	1	0.180	569941-1
1X4	8/8	Y	0	0.180	1339167-1
1X4	8/8	Y	3	0.180	1339167-2
1X4	8/8	Y	1	0.180	1339167-3
1X4	8/8	Y	3	0.145	1339167-4
1X4	8/8	Y	3	0.145	1116589-1
1X4	8/8	—	1	0.180	406135-1
1X6	8/8	—	1	0.180	557572-1
1X6	8/8	Y	1	0.180	406205-2

Note: SHIELDED PRODUCT WITH PANEL GROUNDS ALWAYS CONTAINS PCB GROUNDS
*Hole location varies among modular jack assemblies and is determined by the dimension from the center of the boardlock or guide pin mounting legs to the center of the shield tab solder tine. See page 1163.

For complete product information, order Catalog 82066

Products for Industrial & Commercial Applications
Dimensions are shown for reference purposes only.
Dimensions are in inches and millimeters unless otherwise specified. Values in brackets are metric equivalents.
Specifications subject to change.
Technical Support Center
1-800-522-6752
www.tycoelectronics.com

High Performance Modular Jacks

Product Facts

- **Performance exceeds Near End Crosstalk (NEXT) requirements of -40dB on all pair combinations at 100 MHz per EIA/TIA 568A**
- **Meets all dimensional, tolerance and metallic plating requirements of FCC Part 68**
- **Available in single port or multiple port configurations, shielded or unshielded**
- **Accurately positioned solder tails reduce assembly labor while selectively deposited gold plating results in lower cost**
- **Eliminate need for customized printed circuit board compensation to achieve high performance**
- **Listed by Underwriters Laboratories Inc., File No. E81956**
- **Certified by Canadian Standards Association, File No. LR 7189A**
- **Produced under a Quality Management System Certified to ISO 9001**

A copy of the certificate is available upon request

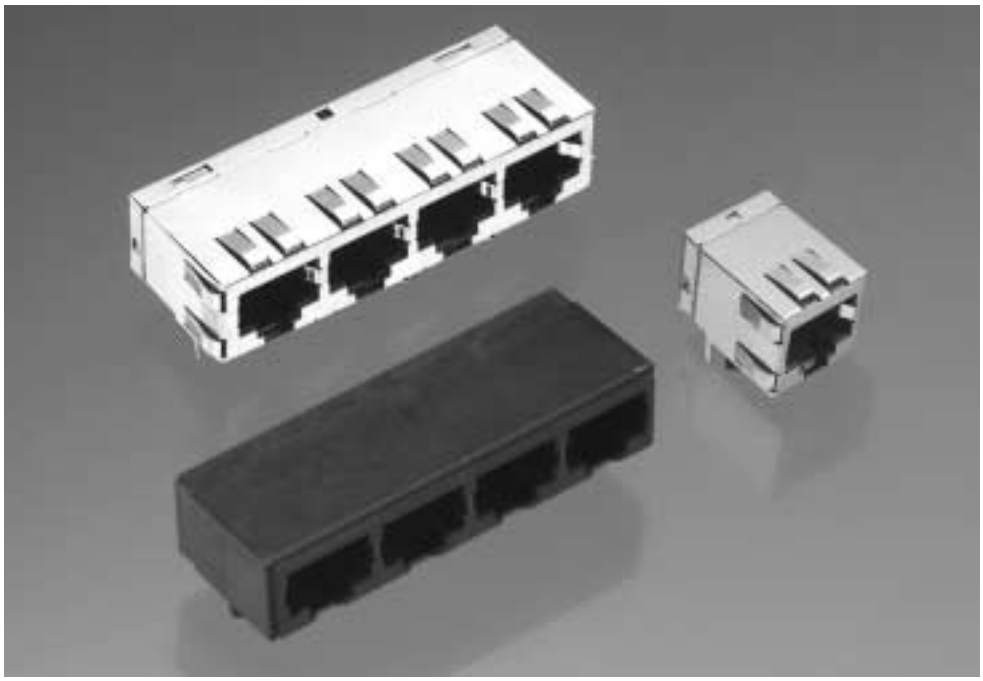

Photo 109384

Specifications:

Electrical:

Current — 1.5 amp maximum @ 25°C

Voltage — 150 VAC maximum

Operating Temperature — -40°C to 70°C

Insulation Resistance — 500 megohms min.

Dielectric Withstanding Voltage — 1000 VAC, RMS

Mating/Unmating Forces — 5 pounds maximum

Durability(Mating Cycles) — 750 minimum

Material and Finish:

Housing — High temperature Nylon, Black, UL 94V-0 rated, IR reflow compatible

Contact — Phosphor bronze, gold over nickel in contact area, tin-lead over nickel in solder area

Shield — Brass, bright tin-lead plated

Technical Documents:

Product Specification
108-01163-2

Application Specification
114-02048

High Performance Modular Jacks

Single Port, Side Entry

Unshielded

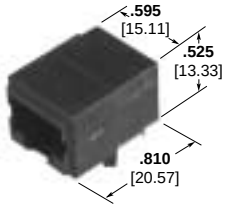

Photo 109319-5

Positions/Contacts	Keyed	Tray Packaging Part Numbers
8/8	—	1116518-1

Shielded

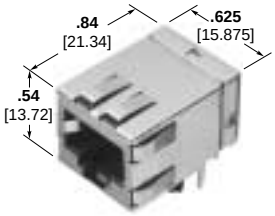

Photo 110056

Positions/Contacts	Panel Ground	No. of Rear PCB Grounds	PCB Ground Location*	Tray Packaging Part Numbers
8/8	0	Y	0.180	406217-1
8/8	Y	0	-0.120	406299-1
8/8	N	0	-0.120	1116526-1

Note: SHIELDED PRODUCT WITH PANEL GROUNDS ALWAYS CONTAINS PCB GROUNDS

*Hole location varies among modular jack assemblies and is determined by the dimension from the center of the boardlock or guide pin mounting legs to the center of the shield tab solder tine. See page 1163.

Multi-Port

Unshielded

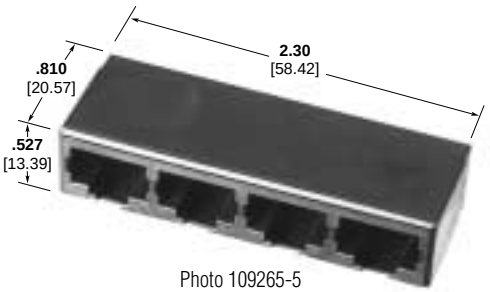

Photo 109265-5

No. of Ports	Positions/ Contacts	Tray Packaging Part Numbers
1X4	8/8	1116523-1
1X6	8/8	1116524-1
1X8	8/8	1116525-1

Shielded

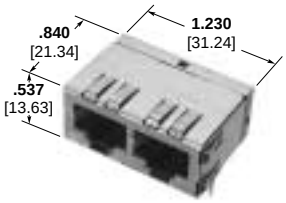

Photo 109263-2

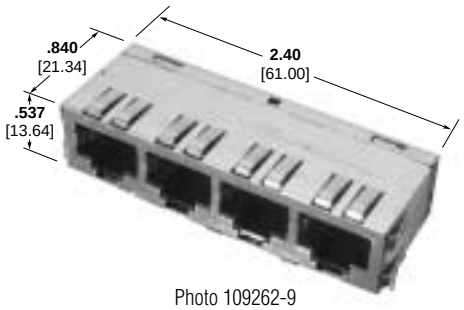

Photo 109262-9

No. of Ports	Positions/Contacts	Panel Ground	No. of Rear PCB Grounds	PCB Ground Location*	Tray Packaging Part Numbers
1X2	8/8	Y	0	0.180	406566-1
1X2	8/8	—	1	0.180	406566-2
1X2	8/8	—	0	0.180	406443-1
1X4	8/8	—	0	0.180	1116528-1
1X4	8/8	Y	0	0.180	406203-1
1X4	8/8	Y	3	0.180	406203-3

NOTE: SHIELDED PRODUCT WITH PANEL GROUNDS ALWAYS CONTAINS PCB GROUNDS

*Hole location varies among modular jack assemblies and is determined by the dimension from the center of the boardlock or guide pin mounting legs to the center of the shield tab solder tine. See page 1163.

For complete product information, order Catalog 82066

Contact Numbering/Shield PCB Ground Tab Location

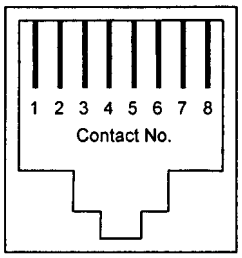

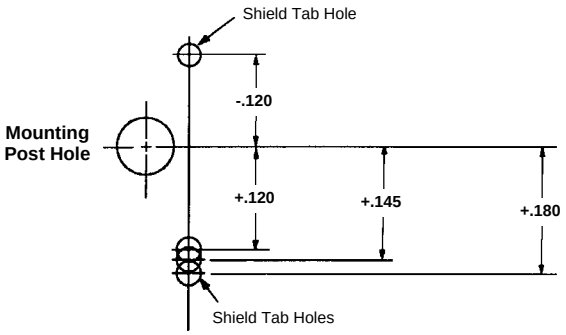

Engineering Notes

Table of Contents

Card Edge Connectors
Standard Edge .050 Series PCI 2003-2006
Standard Edge .050 Series 2007-2010
Standard Edge II 2011-2017
Low Profile 2018-2020

AMPMODU 50/50 Grid Board-to-Board Connectors
.050 x .050 [1.27 x 1.27] Centerline 2021
Board-to-Board Vertical Receptacles and Headers 2022-2024
Board-to-Board Right-Angle Headers 2025, 2026

AMPMODU System 50 Board-to-Board Connectors
.050 x .100 [1.27 x 2.54] Centerline 2027
Board-to-Board Headers, Thru-Hole 2028-2035
Board-to-Board Receptacles, Thru-Hole 2036-2038
Board-to-Board Headers and Receptacles, Surface Mount 2039-2041

AMPMODU .025 [0.64] Square Interconnection System
.100 x .100 [2.54 x 2.54] Centerline 2042-2046
Board-to-Board Headers and Receptacles 2047
Standard Headers -- Unshrouded 2047-2052
Breakaway and Retention Headers -- Unshrouded 2053-2060
Reeled Breakaway Headers -- Unshrouded 2061, 2062
Breakaway Headers, Surface-Mount Compatible, High Temperature -- Unshrouded 2063-2067
Breakaway Headers, Surface Mount 2068, 2069
Standard Profile Headers -- Shrouded 2070-2080
ACTION PIN Headers -- Shrouded and Unshrouded 2081-2087
Horizontal Mount Receptacle Assemblies, Mod II 2088-2090
Vertical Mount Receptacle Assemblies, Mod II & Mod IV 2091-2099
Surface Mount Vertical Receptacles, Mod IV 2100-2105
AMPMODU Two-Piece Printed Circuit Board Connectors 2106-2115

Wire-to-Board Receptacles 2116
Mod IV Wire-Applied Contacts and Housings 2117-2125
Short Point, Crimp Snap-In Wire Applied Contacts and Housings 2126-2128
MTE Interconnection System (Insulation Displacement Contact) 2129, 2130
Receptacle Assemblies 2131-2135
Pin Assemblies 2136, 2137
Coupling Shrouds 2138, 2139
Headers 2140-2148
Colored MTE Headers and Receptacles 2149
Interchangeable Contacts (Crimp, Snap-In) 2150, 2151
MT and Shielded MT Interconnection System 2152-2157

Application Tooling for .100 [2.54] Centerline AMPMODU Connectors 2158, 2159

Technical Documents 2160-2163

AMPMODU .031 x .062 [0.79 x 1.57] Interconnection System
Mod I Receptacle Contacts, Asssemblies, and Housings 2164-2171
Mod I Headers and Machine Applied Posts 2172-2174
Locking Clip Contacts and Housings 2175, 2176
Application Tooling 2177
Performance Specifications 2178
Technical Documents 2178

PC/104 and PC/104-*Plus* Connectors
Press-Fit 2179-2182
Solder 2183
Accessories 2184

Products for Industrial & Commercial Applications
Dimensions are shown for reference purposes only.
Dimensions are in inches and millimeters unless otherwise specified. Values in brackets are metric equivalents.
Specifications subject to change.
Technical Support Center
1-800-522-6752
www.tycoelectronics.com

Table of Contents

.100 [2.54] Centerline MTA-100 IDC Connectors and Headers 2185-2187
Closed End and Feed-Thru Connectors and Accessories 2188-2190
Posted Connectors (Wire-to-Wire), Closed End and Feed-Thru 2191
Headers.....2192-2196

.100 [2.54] Centerline CST-100 II Crimp Contacts and Housings
Contacts and Housings.....2197
CST-100 Shrouded Headers, Straight and Right-Angle 2198

.156 [3.96] Centerline MTA-156 IDC Connectors and Headers 2199-2201
Closed End Connectors 2202
Feed-Thru Connectors 2203
Accessories 2204-2205
Posted Connectors (Wire-to-Wire), Closed End and Feed-Thru 2206
Headers.....2207-2211

MTA-156 IDC Quad Connectors 2212
Quad Connectors, Closed End and Feed-Thru 2213

.156 [3.96] Centerline SL-156 Crimp Contacts and Housings 2214
Crimp Contacts and Keying Plugs 2215
Standard Housings, Wire-to-Board.....2216
Housings and Crimp Contacts for Large Insulation Diameter (LID) Wire.....2217
Housings with Through-Board Latch 2218

MTA Connectors Approved Wire Listing (MTA-100 and MTA-156) 2219

IDC Flat Ribbon Cable 2220
.100 [2.54] Centerline, PVC Insulation 2221
.156 [3.96] Centerline, PVC Insulation 2222
Prepared IDC Ribbon Cable (Prenotched, Cut-to-Length, etc.).....2223

MTA Application Tooling 2224-2227

CHAMP .050 Series I Board-to-Board Connectors 2228-2230

0.8mm Free Height (FH) Surface Mount Board-to-Board Connectors
Board-to-Board Stacking Heights 2231, 2232
Vertical Plugs 2233-2236
Vertical Receptacles 2237-2239

CT (Common Termination) Wire-to-Board Connectors
.079 [2.0] Centerline 2240
Receptacle Assemblies 2241
Post Header Assemblies 2242, 2243
MT AMP-IN Header 2244
Application Tooling 2245

Economy Interconnection (EI) Series Wire-to-Board and Wire-to-Wire Connectors
.098 [2.50] Centerline 2246, 2247
Wire-Applied Receptacles.....2248, 2249
Post Headers 2250, 2251
Wire-Applied Plugs 2252

Micro MaTch Miniature Board-to-Board and Wire-to-Board Connectors
.050 [1.27] Centerline.....2253-2259

Printed Circuit Board Terminals and Disconnects
AMP-BARREL Terminals 2260, 2261
Test Probe Receptacles 2262
Power Taps 2263-2266
Right-Angle Power Tap 2267, 2268

Product Facts

- **High density .050 [1.27] centerline contact spacing**
- **Easy mating of high circuit count daughter boards**
- **Polarizing web for positive board-to-connector registration**
- **Choice of plastic pylons or metal holddowns**

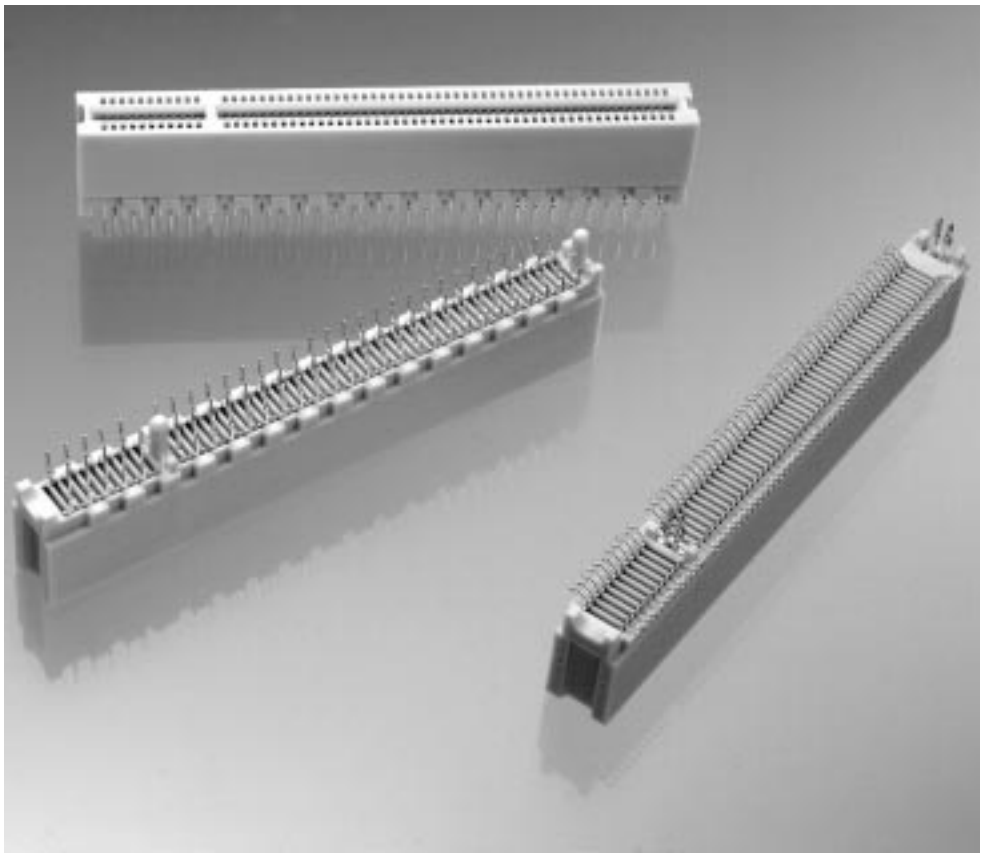

Connectors that support PCI expansion cards are derived from those on the MC bus. The MC connectors are well defined and have proven value and reliability.

There are four connectors that can be used depending upon the PCI implementation. The differences between these connectors are 32 bit and 64 bit, and the 5 volt and 3.3 volt signaling environments. PCI-X is a version of PCI at 133 MHz which is under development and employs standard PCI connectors. PCI-X is limited to 1 slot versus 4 slots of PCI.

A key differentiates the signaling environment voltages. The same physical connector is used for the 32 bit signaling environments. In one orientation, the key accepts 5 volt boards. When rotated 180°, the connector accepts 3.3 volt signaling boards. The pin numbering of the connector changes for the different signaling environments to maintain the same relative position of signals on the connector.

Performance Specifications:

Durability—Tested to 100 mating cycles

Mating Force—8 oz [2.22 N] max. per contact pair

Unmating Force—.5 oz [0.14 N] min. per contact pair

Contact Resistance—20 milliohms max. (initial) 30 milliohms max. (final)

Insulation Resistance—1000 megohms min.

Dielectric Withstanding Voltage—500 VAC (at sea level)

Capacitance—2 picofarads max.

Current Rating—1 ampere max.

Voltage Rating—203 VAC

Thermal Shock—–55°C to +85°C for 5 cycles

Mixed Flowing Gas—Class II with mated board for 20 days

Technical Documents:

Product Specification
108-14034

Application Specification
114-26012

Qualification Test Report
501-203

For complete product information, order Catalog 82619

Products for Industrial & Commercial Applications

Dimensions are shown for reference purposes only.

Dimensions are in inches and millimeters unless otherwise specified. Values in brackets are metric equivalents.

Specifications subject to change.

Technical Support Center
1-800-522-6752
www.tycoelectronics.com

32 Bit, 3.3 and 5 Volt Signaling

60 Dual Positions with 2 Plastic Pylons or 2 Metal Holddowns

Material and Finish:

Housing Y—High temperature thermoplastic 94V-0 rated, white

Housing Z—Nylon 6/6, white

Contacts—Phosphor bronze, plated as follows:

Plating A—Duplex plated gold flash in contact area, .000100 [0.00254] min. tin-lead on solder tails, with entire contact underplated .000050 [0.00127] min. nickel

Plating B—Duplex plated .000015 [0.00038] min. gold in contact area, .000100 [0.00254] min. tin-lead on solder tails, with entire contact underplated .000050 [0.00127] min. nickel

Plating C—Duplex plated .000030 [0.00076] min. gold in contact area, .000100 [0.00254] min. tin-lead on solder tails, with entire contact underplated .000050 [0.00127] min. nickel

Related Product Data:

Performance Specifications—page 2003

Technical Documents:

Product Specification
108-14034

Application Specification
114-26012

Plastic Pylons

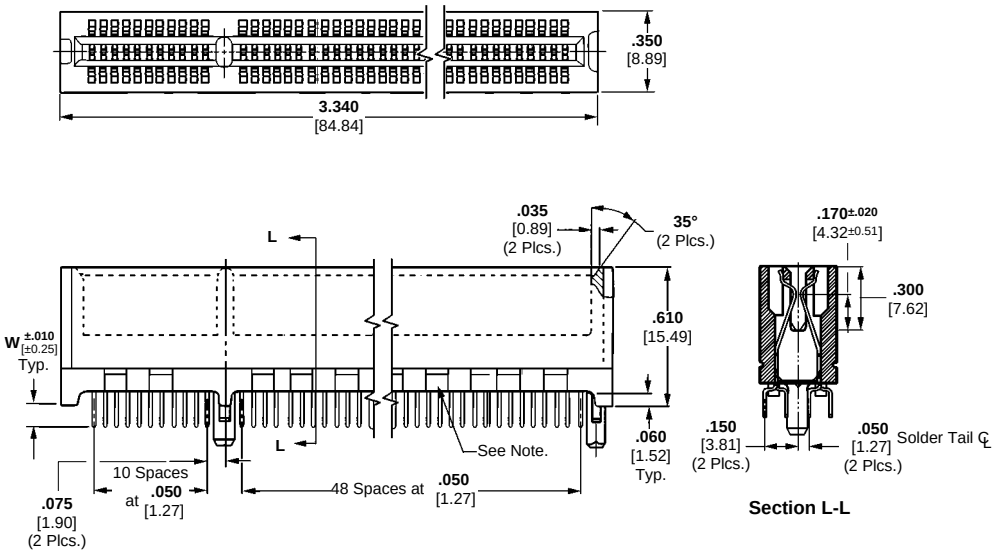

Metal Holddowns

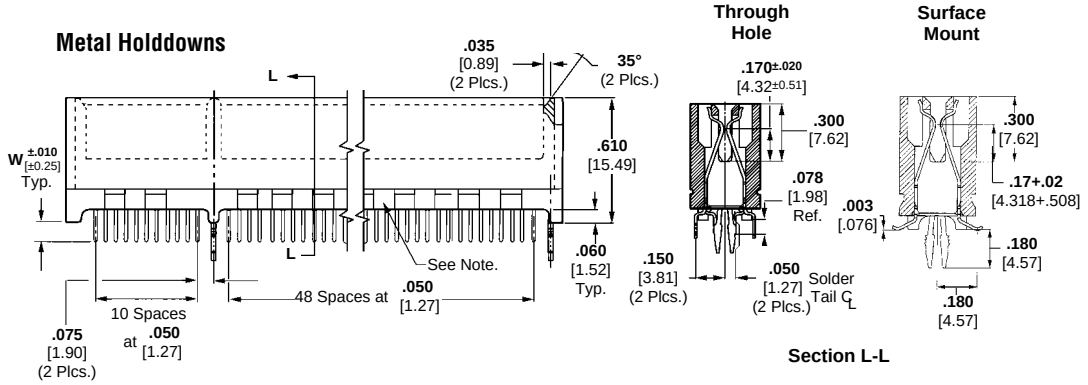

W (Post Length)	Housing Material	Contact Finish	Part Numbers	
			2 Plastic Pylons	2 Metal Holddowns
.100 2.54	Y	Plating A	145154-1	145167-1
		Plating B	145154-2	—
		Plating C	145154-4	145167-4
.118 3.00	Z	Plating A	11299-1	—
		Plating B	11299-6	—
.125 3.18	Y	Plating C	145154-8	—
Surface Mount	Y	Plating C	—	145098-1

Notes: 1. Connectors are supplied with either cored (shown above) or solid side walls.
2. Other connector sizes can be made available, consult Tyco Electronics.

For complete product information, order Catalog 82619

Products for Industrial & Commercial Applications

Dimensions are shown for reference purposes only.

Dimensions are in inches and millimeters unless otherwise specified. Values in brackets are metric equivalents.

Specifications subject to change.

Technical Support Center
1-800-522-6752
www.tycoelectronics.com

64 Bit, 3.3 Volt Signaling

92 Dual Positions with 3 Plastic Pylons or 3 Metal Holddowns

Material and Finish:

Housing—High temperature thermoplastic 94V-0 rated, white

Contacts—Phosphor bronze, plated as follows:

Plating B—Duplex plated .000015 [0.00038] min. gold in contact area, .000100 [0.00254] min. tin-lead on solder tails, with entire contact underplated .000050 [0.00127] min. nickel

Plating C—Duplex plated .000030 [0.00076] min. gold in contact area, .000100 [0.00254] min. tin-lead on solder tails, with entire contact underplated .000050 [0.00127] min. nickel

Related Product Data:

Performance Specifications—page 2003

Technical Documents:

Product Specification
108-14034

Application Specification
114-26012

Plastic Pylons

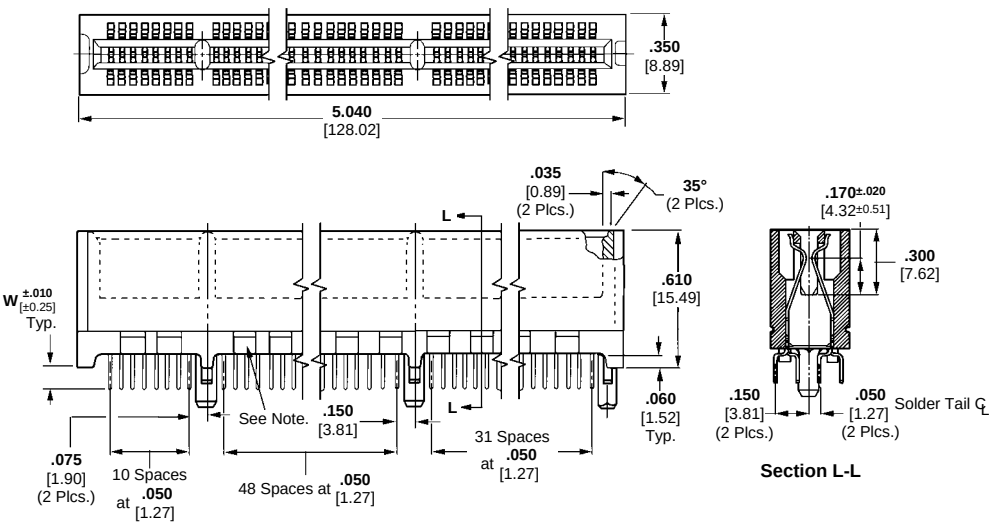

Metal Holddowns

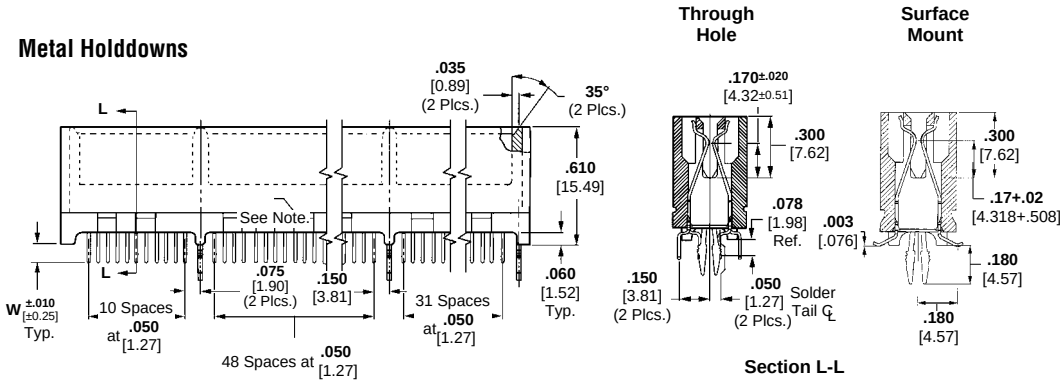

W (Post Length)	Contact Finish	Part Numbers 3.3 Volt: 3 Plastic Pylons	Part Numbers 3.3 Volt: 3 Metal Holddowns
.100 2.54	Plating B	—	145168-2
	Plating C	145165-4	145168-4
.125 3.18	Plating C	145165-8	—
Surface Mount	Plating C	—	145246-1

Notes: 1. Connectors are supplied with either cored (shown above) or solid side walls.
2. Other connector sizes can be made available, consult Tyco Electronics.

For complete product information, order Catalog 82619

Products for Industrial & Commercial Applications

Dimensions are shown for reference purposes only.

Dimensions are in inches and millimeters unless otherwise specified. Values in brackets are metric equivalents.

Specifications subject to change.

Technical Support Center
1-800-522-6752
www.tycoelectronics.com

64 Bit, 5 Volt Signaling

92 Dual Positions with 3 Plastic Pylons or 3 Metal Holddowns

Material and Finish:

Housing—High temperature thermoplastic 94V-0 rated, white

Contacts—Phosphor bronze, plated as follows:

Plating B—Duplex plated .000015 [0.00038] min. gold in contact area, .000100 [0.00254] min. tin-lead on solder tails, with entire contact underplated .000050 [0.00127] min. nickel

Plating C—Duplex plated .000030 [0.00076] min. gold in contact area, .000100 [0.00254] min. tin-lead on solder tails, with entire contact underplated .000050 [0.00127] min. nickel

Related Product Data:

Performance Specifications—page 2003

Technical Documents:

Product Specification
108-14034

Application Specification
114-26012

Plastic Pylons

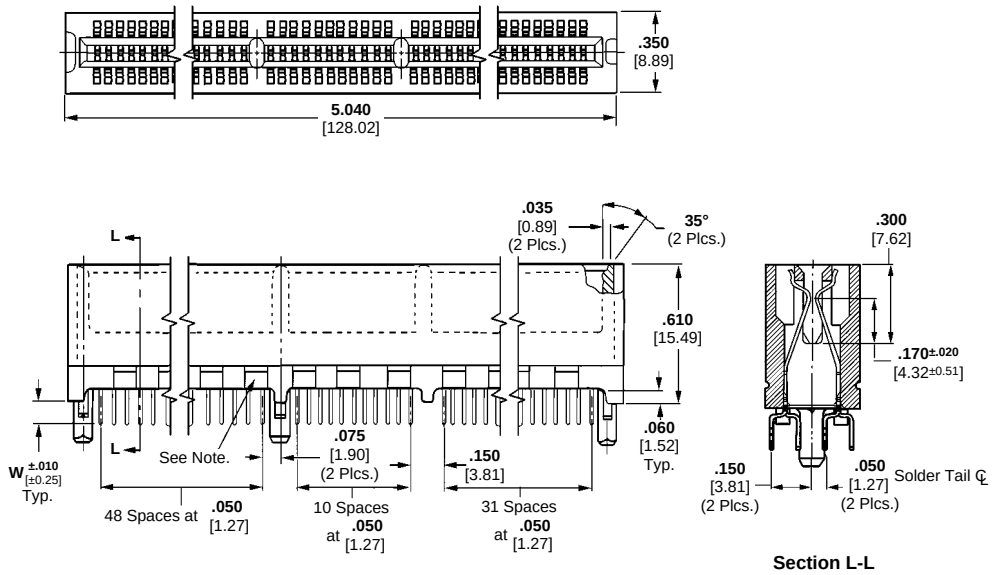

Section L-L

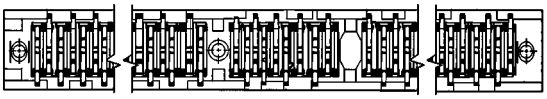

Metal Holddowns

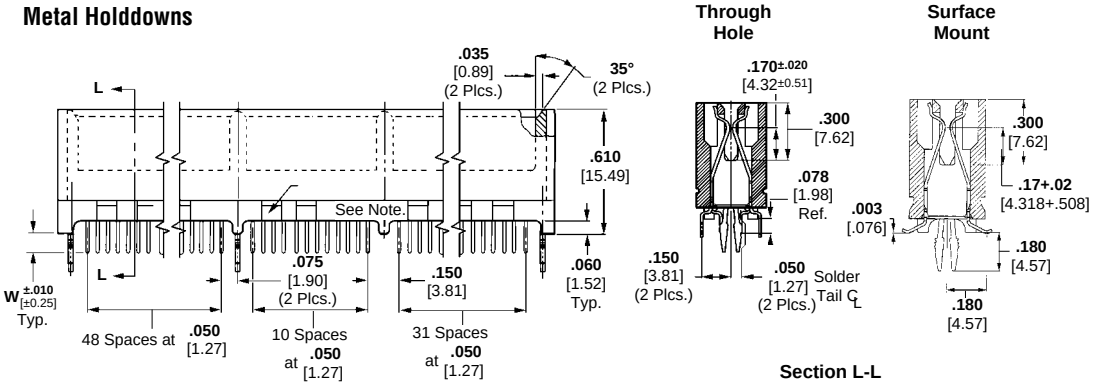

Section L-L

W (Post Length)	Contact Finish	Part Numbers 5 Volt	
		3 Plastic Pylons	3 Metal Holddowns
.100 2.54	Plating B	145166-2	—
	Plating C	145166-4	145169-4
.125 3.18	Plating C	145166-8	145169-8
Surface Mount	Plating C	—	145113-1

Notes: 1. Connectors are supplied with either cored (shown above) or solid side walls.
2. Other connector sizes can be made available, consult Tyco Electronics.

For complete product information, order Catalog 82619

Products for Industrial & Commercial Applications

Dimensions are shown for reference purposes only.

Dimensions are in inches and millimeters unless otherwise specified. Values in brackets are metric equivalents.

Specifications subject to change.

Technical Support Center
1-800-522-6752
www.tycoelectronics.com

Product Facts

- **High density .050 [1.27] centerline spacing of contacts**
- **Easy mating of high-circuit count daughter boards**
- **Compatible with infrared reflow (IR) soldering techniques**
- **Polarizing web for positive board-to-connector registration**
- **Choice of plastic pylons or metal holddowns**
- **Recognized under the Component Program of Underwriter Laboratories Inc. File No. E28476**
- **Certified by Canadian Standards Association, File No. LR 7189**

Performance Specifications:

Contact Current Rating* —1 ampere

Termination Resistance — 20 milliohms max. (initial) 30 milliohms max. (final)

Dielectric Withstanding Voltage — 500 VAC min.

Insulation Resistance — 1000 megohms min.

Mating Force — .5 oz. [0.14 N] per contact pair

Unmating Force — 1 oz. [0.3 N] per contact pair

Durability (Tested to) — 100 mating cycles

Application Temperature — +215°C for 120 seconds max.

Temperature Range — –55°C to +85°C

***Consult AMP engineering when paralleling contacts for power applications.**

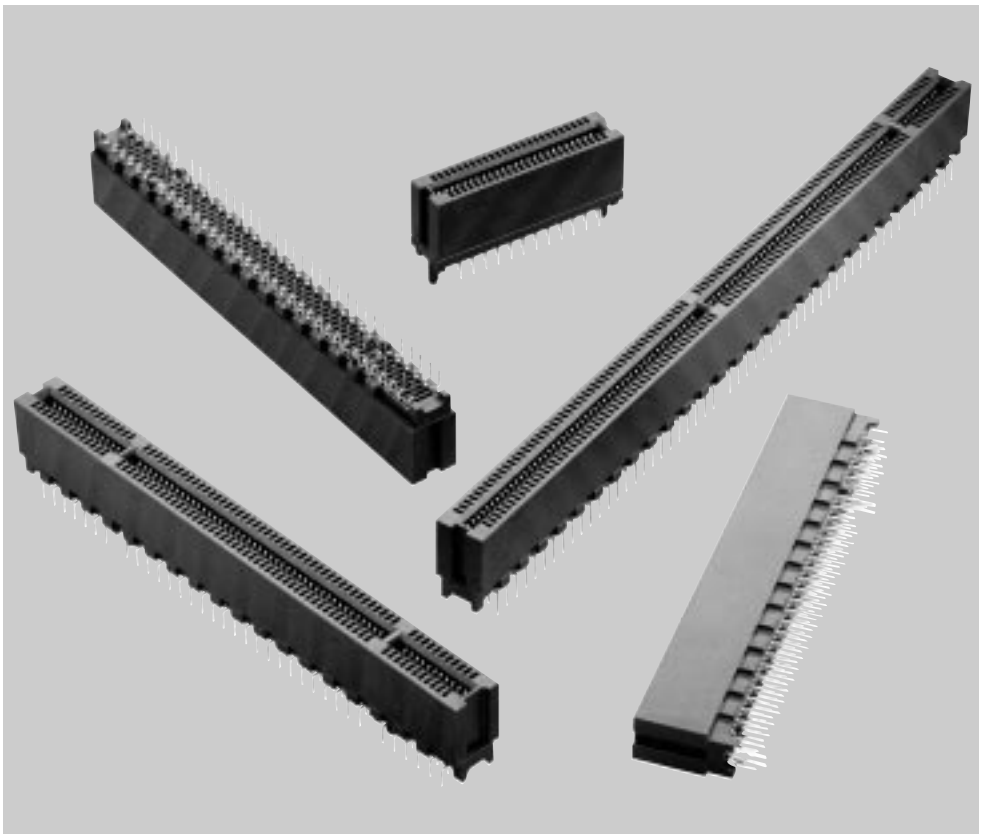

The need to conserve space and pack more function into a given area has demanded that .050 [1.27] centerline spacing become a reality. AMP Standard Edge .050 Series connectors are the ideal vehicle for mother/daughter board applications requiring this real estate.

These rugged connectors have two rows of contacts on .050 [1.27] centerlines. Polarizing webs provide positive board-to-connector registration, while insertion force allows even high circuit-count daughter boards to mate easily. The connectors accept .054 to .070 [1.37 to 1.78] thick daughter boards and feature an overstress protected contact design.

AMP Standard Edge .050 Series connectors are ideal for fast automated robotic assembly with registration features and dimensional tolerancing for more accurate pickup and placement, and are packaged in robotics-compatible trays.

Plastic guide posts or metal holddowns align the connector with the mother board and retain it for soldering. To make circuit routing easy, connector solder posts are arranged in a four-row .100 [2.54] staggered grid. High-temperature tolerant materials promote that these connectors withstand infrared reflow (IR) soldering, while standoffs ease flux cleaning.

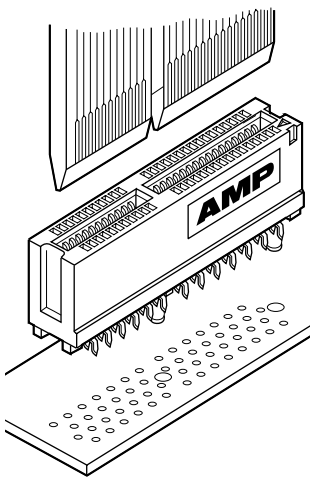

High Density for DataBus Applications

For complete product information, order Catalog 82619

Products for Industrial & Commercial Applications

Dimensions are shown for reference purposes only.

Dimensions are in inches and millimeters unless otherwise specified. Values in brackets are metric equivalents.

Specifications subject to change.

Technical Support Center
1-800-522-6752
www.tycoelectronics.com

Configuration; 1 Key—2 Plastic Pylons

Material and Finish:

Housing—High temperature thermoplastic, brown

Contacts—Phosphor bronze, duplex plated .000030 [0.00076] min. gold in contact area, .000100 [0.00254] min. tin-lead on solder tails, with entire contact underplated .000050 [0.00127] min. nickel

Related Product Data:

Performance Specifications—page 2007

Technical Documents:

Product Specification
108-14034

Application Specification
114-26012

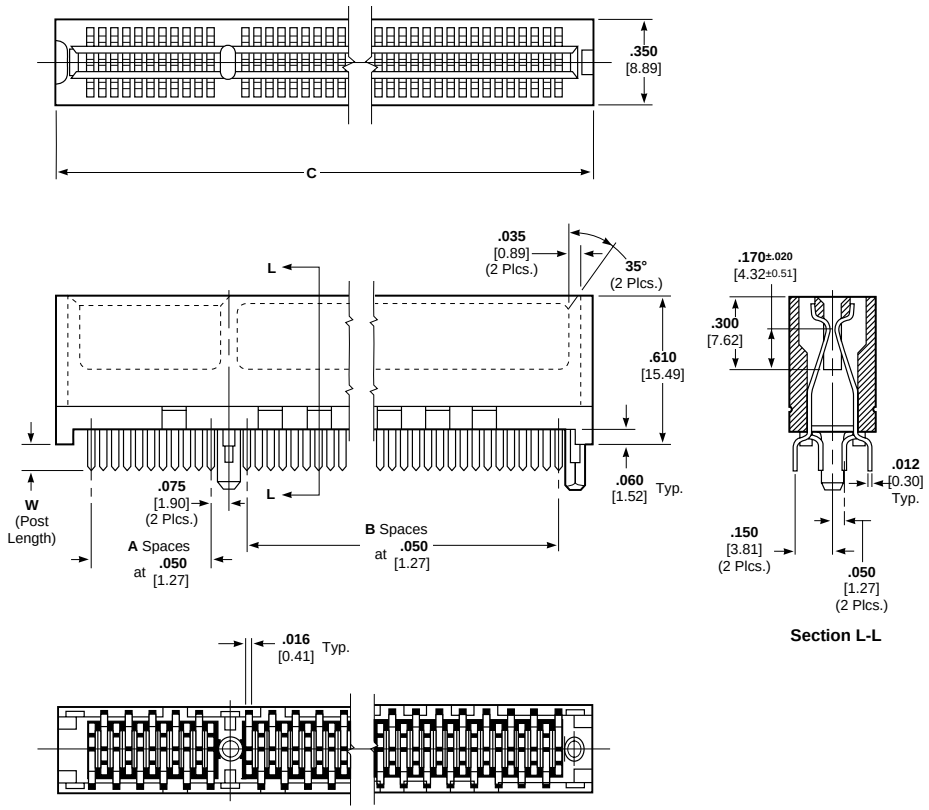

No. of Dual Positions	Dimensions			W (Post Length)	PC Board Hole Layout	Connector Part Numbers
	A	B	C			
23	10	11	**1.490** 37.85	**.100** 2.54	A	650090-7
30	10	18	**1.840** 46.74	**.100** 2.54	B	650090-6
40	10	28	**2.340** 59.44	**.100** 2.54	B	650090-3
				.140 3.56	B	650181-2
45	10	33	**2.590** 65.79	**.100** 2.54	A	650090-2
56	10	44	**3.140** 79.76	**.100** 2.54	B	650090-1[1]
				.140 3.56	B	650181-1
80	37	41	**4.340** 110.24	**.100** 2.54	C	650090-9
91	41	48	**4.890** 124.21	**.100** 2.54	A	650092-1[2]
				.140 3.56	A	650092-2

[1] Connector used for VL Local Bus and MCA Bus applications.
[2] Connector used for MCA Bus applications.

Notes: 1. Other connector sizes can be made available, consult Tyco Electronics.
2. .125 [3.18] post length is available, consult Tyco Electronics.

For complete product information, order Catalog 82619

Products for Industrial & Commercial Applications

Dimensions are shown for reference purposes only.

Dimensions are in inches and millimeters unless otherwise specified. Values in brackets are metric equivalents.

Specifications subject to change.

Technical Support Center
1-800-522-6752
www.tycoelectronics.com

Configuration; 1 Key—2 Plastic Pylons

Material and Finish:

Housing—High temperature thermoplastic, brown

Contacts—Phosphor bronze, duplex plated .000030 [0.00076] min. gold in contact area, .000100 [0.00254] min. tin-lead on solder tails, with entire contact underplated .000050 [0.00127] min. nickel

Related Product Data:

Performance Specifications—page 2007

Technical Documents:

Product Specification
108-14034

Application Specification
114-26012

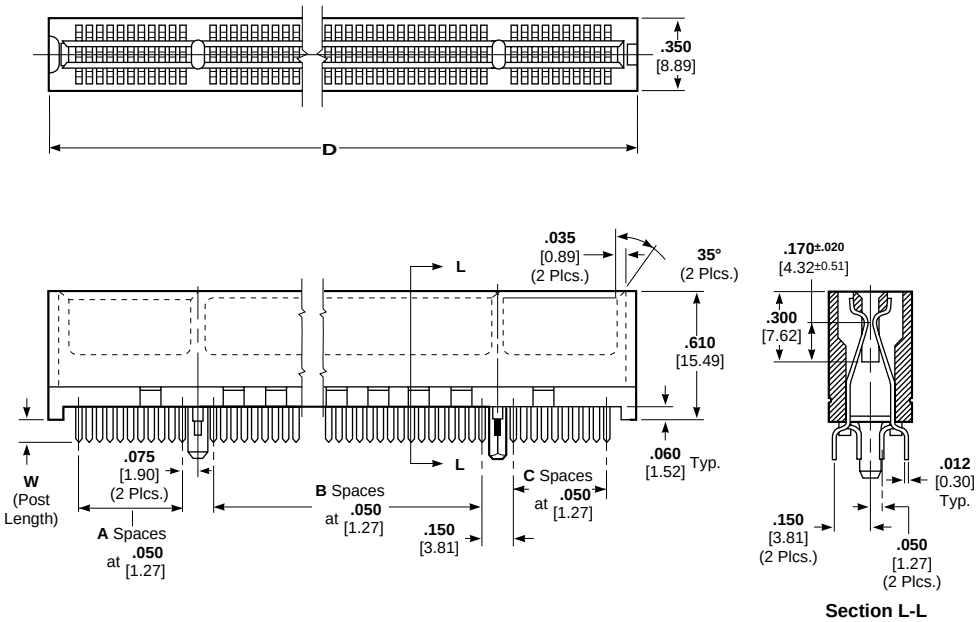

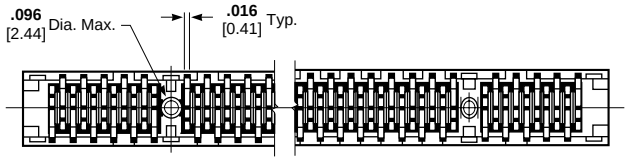

No. of Dual Positions	Dimensions				W (Post Length)	PC Board Hole Layout	Connector Part Numbers
	A	B	C	D			
66	10	44	9	**3.740** 95.00	**.100** 2.54	A	650091-1*
					.140 3.56	A	650091-2

*Connectors used for MCA Bus applications.

Notes: 1. Other connector sizes can be made available, consult Tyco Electronics.
2. .125 [3.18] post length is available, consult Tyco Electronics.

Configuration; 1 Key/1 Web —3 Metal Holddowns

120 Dual Positions

Material and Finish:

Housing—High temperature thermoplastic, brown

Holddowns—Brass, plated .000150 [0.00381] min. tin-lead over .000050 [0.00127] min. nickel

Contacts—Phosphor bronze, duplex plated .000030 [0.00076] min. gold in contact area, .000100 [0.00254] min. tin-lead on solder tails, with entire contact underplated .000050 [0.00127] min. nickel

Related Product Data:

Performance Specifications—page 2007

Technical Documents:

Product Specification
104-14034

Application Specification
114-26012

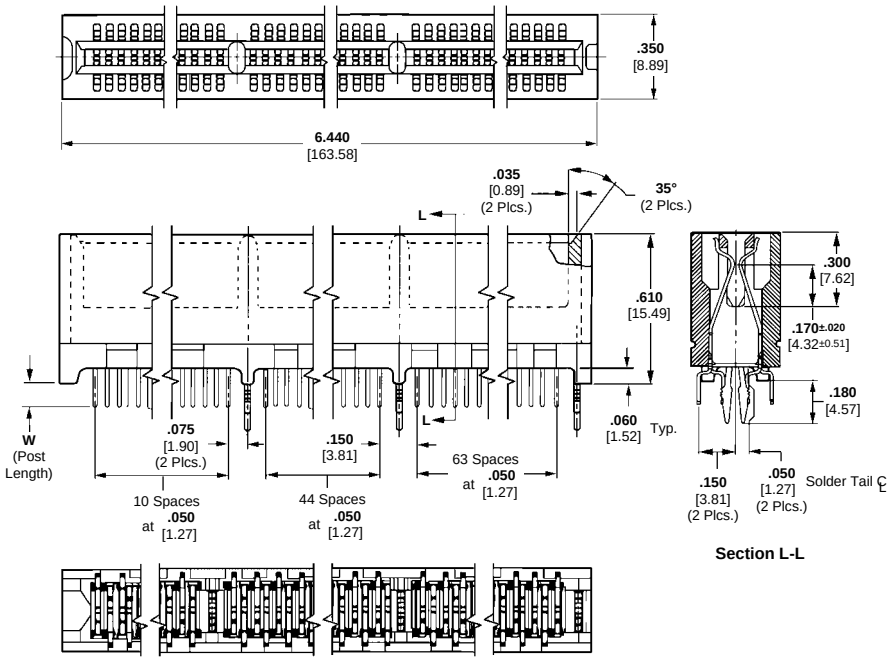

No. of Dual Positions	W (Post Length)	Connector Part Numbers
120	**.140** 3.56	145031-3

Note: Other connector sizes can be made available, consult Tyco Electronics.

Configuration; End Key

Material and Finish:

Housing—High temperature thermoplastic, brown

Contacts—Phosphor bronze, duplex plated .000030 [0.00076] min. gold in contact area, .000100 [0.00254] min. tin-lead on solder tails, with entire contact underplated .000050 [0.00127] min. nickel

Related Product Data:

Performance Specifications—page 2007

Technical Documents:

Product Specification
108-14034

Application Specification
114-26012

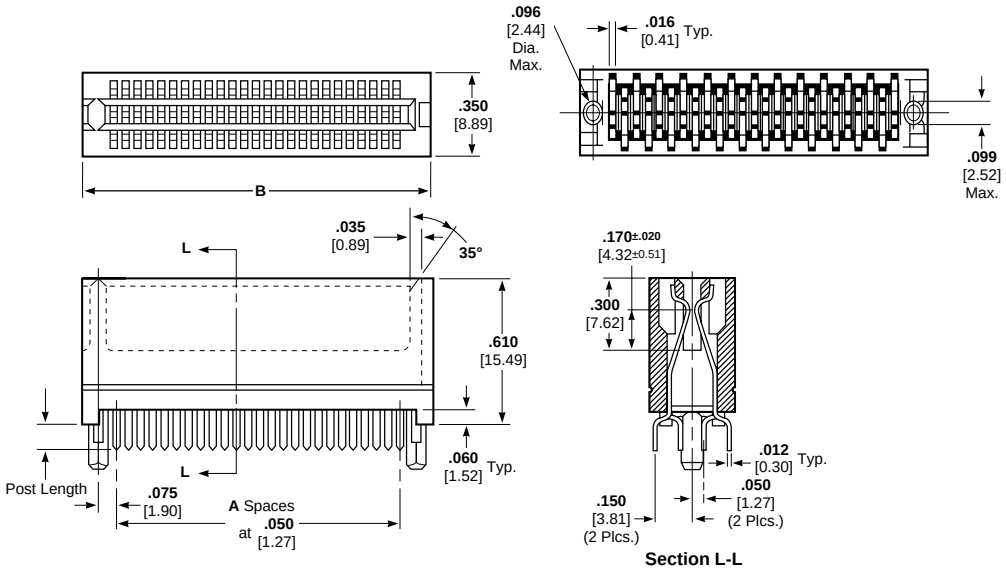

No. of Dual Positions	Dimensions				Post Length	Connector Part Numbers
	A	B	C	D		
25	24	**1.480** 37.59	**1.350** 34.29	**1.310** 33.27	**.100** 2.54	650719-1

Note: Other connector sizes can be made available, consult Tyco Electronics.

For complete product information, order Catalog 82619

Products for Industrial & Commercial Applications

Dimensions are shown for reference purposes only.

Dimensions are in inches and millimeters unless otherwise specified. Values in brackets are metric equivalents.

Specifications subject to change.

Technical Support Center
1-800-522-6752
www.tycoelectronics.com

Product Facts

- **Maximum number of dual positions**
  .100 [2.54] Centerlines-70
  .125 [3.18] Centerlines-50
- **Selective gold plating of contacts for high performance at low cost**
- **.025 [0.64] square solid posts meet standard wrap-type specifications**
- **For flow solder applications**
- **Glass-filled polyester housing is 94V-0 rated**
- **Accepts double sided PC boards, .054-.070 [1.27-1.78] thick**
- **Recognized under the Component Program of Underwriters Laboratories Inc., File No. E28476**
- **Certified by Canadian Standards Association, File No. LR 7189**

Performance Specifications:

Contact Rating* — 3 amperes continuous (UL and CSA)

Contact Resistance — 10 milliohms max.

Operating Temperature — –55°C to +85°C

Voltage Rating (Sea Level) — .100 [2.54] centerline—1000 VAC (test)
.125 [3.18] centerline—1500 VAC (test)

Insulation Resistance — 5000 megohms min., after exposure to humidity

Vibration Tolerance — 10 to 500 hertz

Contact Engagement Force — 12 oz [3.3 N] average per pair with .062 [1.57] PC board

Contact Separation Force — 2 oz [0.6 N] average per pair with .062 [1.57] PC board

Humidity Tolerance — 90%-95% for 96 hours

***Consult Tyco Electronics engineering when paralleling contacts for power applications.**

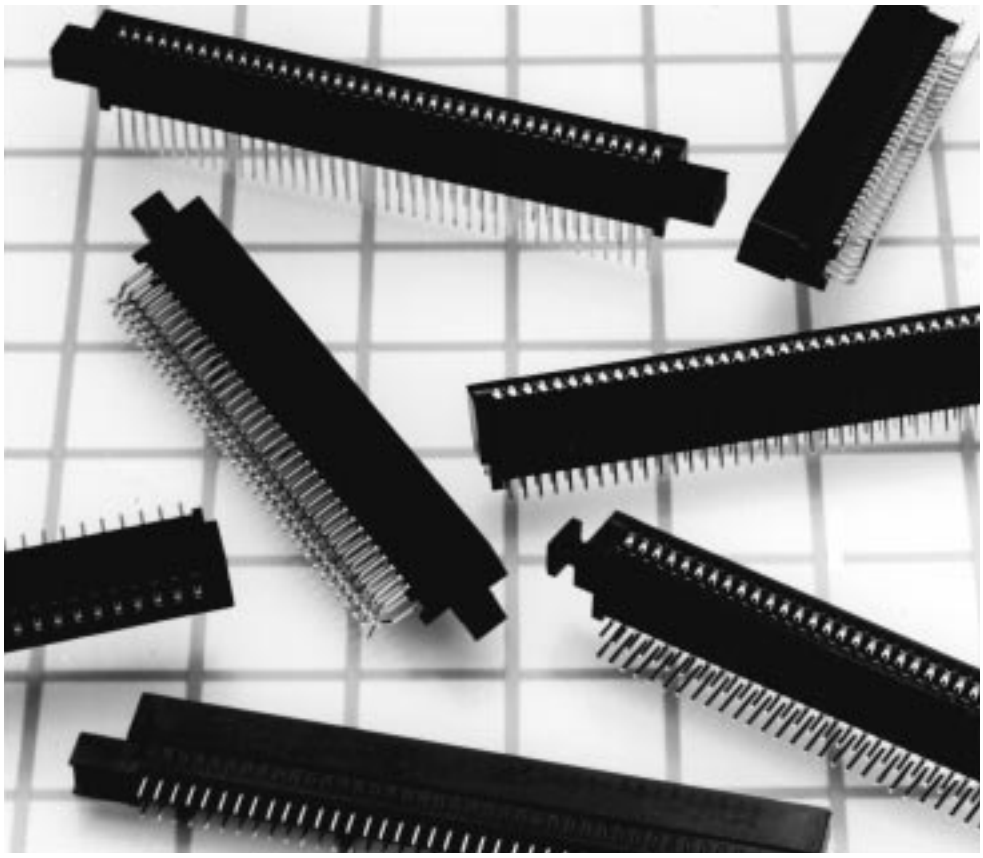

AMP Standard Edge II Connectors provide high reliability and economy in packages compatible with industry standards for double sided printed circuit boards.

Tyco Electronics offers Standard Edge II Connectors with or without mounting ears, for rack mounting and soldering. Contacts are arranged on .100 [2.54] centers, .200 [5.08] row-to-row; and .125 [3.18] centers, .250 [6.35] row-to-row.

Right-angle connectors are also available with contacts arranged on .100 [2.54] centers, .150 [3.81] row-to-row or .200 [5.08] row-to-row.

Card extenders with contacts on .100 [2.54] and .125 [3.18] centers also are available.

Precision formed phosphor bronze contacts are selectively gold plated. Phosphor bronze has excellent strength characteristics which help the connector absorb load deflection movement of a PC board while maintaining sufficient contact force for good electrical connection. Bifurcated cantilever beam contacts provide redundant contact.

For complete product information, order Catalog 82619

.100 [2.54] Centerline, Vertical Solder Posts, Without Mounting Ears

Material and Finish:

Housing—Black glass-filled polyester, 94V-0 rated

Contacts—Phosphor bronze, duplex plated as follows:

Plating A—.000030 [0.00076] gold in contact area, tin on posts, with entire contact nickel underplated

Plating B—.000015 [0.00038] gold in contact area, tin on posts, with entire contact nickel underplated

Plating C—Gold flash in contact area, tin on posts, with entire contact nickel underplated

Technical Documents:

Product Specification
108-9039

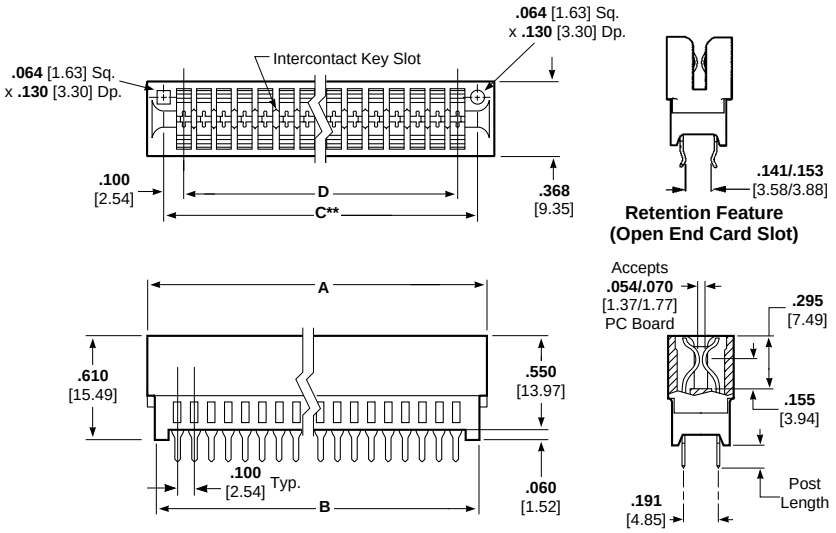

No. of Dual Positions	Dimensions				Post Length*	Part Numbers		
	A	B	C**	D		Plating A	Plating B	Plating C
3	**.560** 14.22	**.450** 11.43	Open End	**.200** 5.08	**.125**	650263-1[1]	—	—
6	**.860** 21.84	**.750** 19.05	**.700** 17.78	**.500** 12.70	**.125** **.187**	7-530843-5 7-530843-6	—	—
10	**1.260** 32.00	**1.150** 29.21	**1.100** 27.94	**.900** 22.86	**.125** **.187**	5-530843-0 4-530843-9	—	—
12	**1.460** 37.08	**1.350** 34.29	**1.300** 33.02	**1.100** 27.94	**.125**	530843-1	—	—
15	**1.760** 44.70	**1.650** 41.91	**1.600** 40.64	**1.400** 35.56	**.125**	530843-2	—	—
17	**1.960** 49.78	**1.850** 46.99	**1.800** 45.72	**1.600** 40.64	**.125**	5-530843-3	—	—
18	**2.060** 52.32	**1.950** 49.53	**1.900** 48.26	**1.700** 43.18	**.125**	530843-3	2-530843-7	176137-1[1]
20	**2.260** 57.40	**2.150** 54.61	**2.100** 53.34	**1.900** 48.26	**.125**	5-530843-4	—	—
22	**2.460** 62.48	**2.350** 59.69	**2.300** 58.42	**2.100** 53.34	**.125**	530843-4	—	—
25	**2.760** 70.10	**2.650** 67.31	**2.600** 66.04	**2.400** 60.96	**.125**	530843-5	—	—
28	**3.060** 77.72	**2.950** 74.93	**2.900** 73.66	**2.700** 68.58	**.125**	530843-6	—	—
30	**3.260** 82.80	**3.150** 80.01	**3.100** 78.74	**2.900** 73.66	**.125** **.187**	530843-7 1-530843-8	—	—
31	**3.360** 85.34	**3.250** 82.55	**3.200** 81.28	**3.000** 76.20	**.125**	6-530843-5	7-530843-0	—
36	**3.860** 98.04	**3.750** 95.25	**3.700** 93.98	**3.500** 88.90	**.125**	530843-8	—	—
40	**4.260** 108.20	**4.150** 105.41	**4.100** 104.14	**3.900** 99.06	**.187**	2-530843-0	—	—
50	**5.260** 133.60	**5.150** 130.81	**5.100** 129.54	**4.900** 124.46	**.125**	1-530843-1	—	—

*Metric equivalent for post lengths are **.125** = 3.18; **.187** = 4.75.
**C dimension is card slot length.
[1] Connectors with Retention Feature.

Notes: 1. Other connector sizes can be made available, consult Tyco Electronics.
2. High temperature IR reflow compatible connectors can be made available, consult Tyco Electronics.

Intercontact Keying Plug

Material:

Natural color polyester

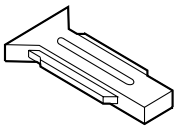

Part Number 650025-2
(**.100** [2.54] Centerline)

For complete product information, order Catalog 82619

Products for Industrial & Commercial Applications

Dimensions are shown for reference purposes only.

Dimensions are in inches and millimeters unless otherwise specified. Values in brackets are metric equivalents.

Specifications subject to change.

Technical Support Center
1-800-522-6752
www.tycoelectronics.com

.125 [3.18] Centerline, Vertical Solder Posts, Without Mounting Ears

Material and Finish:

Housing—Black glass-filled polyester, 94V-0 rated

Contacts—Phosphor bronze, plated with .000030 [0.00076] gold in contact area, tin on posts, with entire contact nickel underplated

Technical Documents:

Product Specification
108-9039

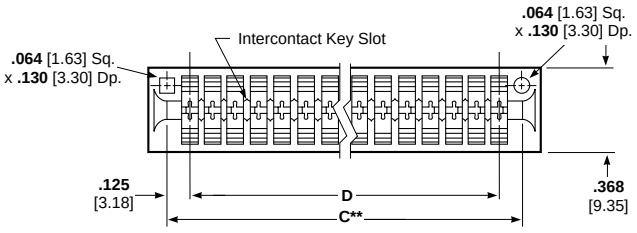

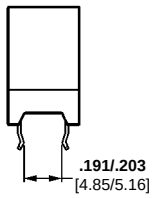

Retention Feature

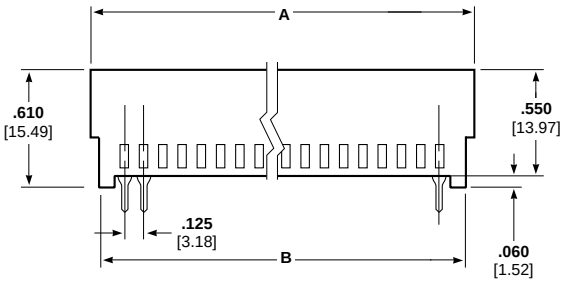

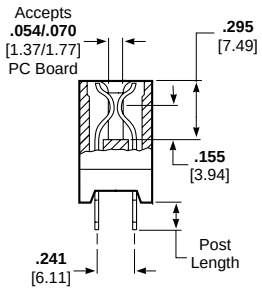

Intercontact Keying Plug

Material:

Natural color polyester

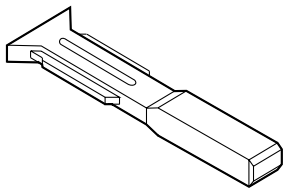

Part Number 650025-1
(**.125** [3.18] Centerline)

No. of Dual Positions	Dimensions				Post Length*	Part Numbers
	A	B	C**	D		
6	**1.035** 26.29	**.875** 22.22	**.875** 22.22	**.625** 15.88	**.125**	650207-1[1]
28	**3.785** 96.14	**3.625** 92.08	**3.625** 92.08	**3.375** 85.73	**.187**	1-530844-7

*Metric equivalent for post lengths are **.125** = 3.18; **.187** = 4.75
**C dimension is card slot length.
[1] Connector with Retention Feature.

Notes: 1. Other connector sizes can be made available, consult Tyco Electronics.
2. High temperature IR reflow compatible connectors can be made available, consult Tyco Electronics.

.100 [2.54] and .125 [3.18] Centerline, Vertical Solder Posts, Low and Mid-High Mounting Ears

Material and Finish:

Housing—Black glass-filled polyester, 94V-0 rated

Contacts—Phosphor bronze, plated with .000030 [0.00076] gold in contact area, tin on posts, with entire contact nickel underplated

Technical Documents:

Product Specification
108-9039

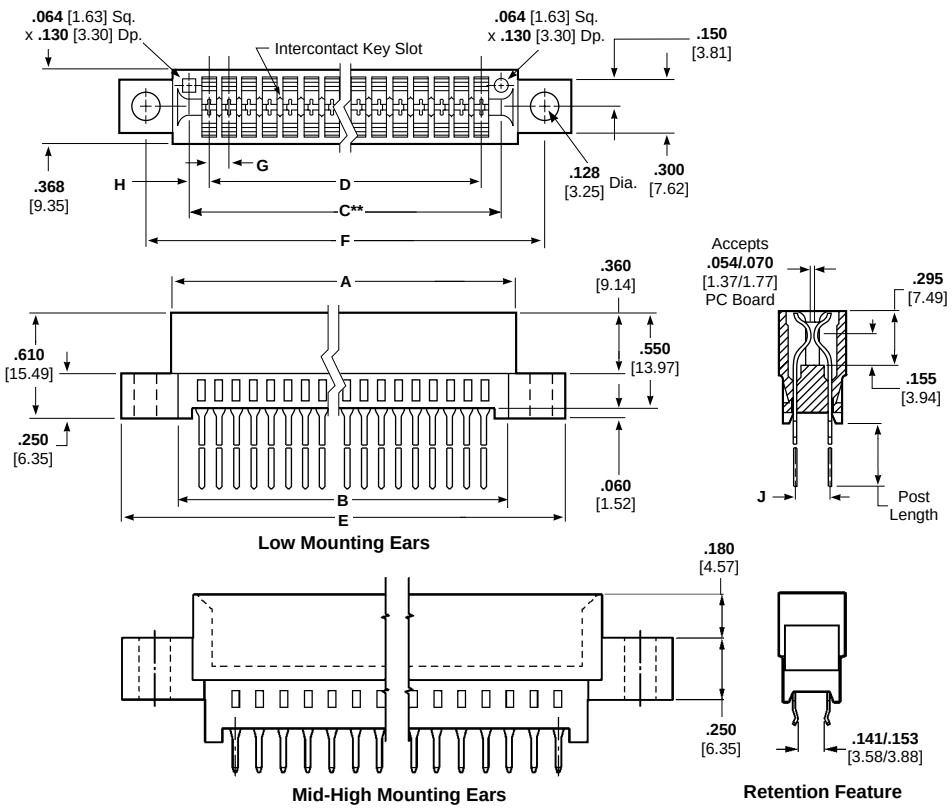

Intercontact Keying Plugs

Material:

Natural color polyester

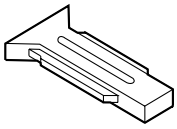

Part Number 650025-2
(**.100** [2.54] Centerline)

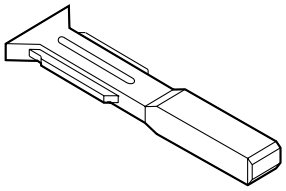

Part Number 650025-1
(**.125** [3.18] Centerline)

.100 [2.54] Centerline

No. of Dual Positions	Dimensions									Post Length*	Part Numbers
	A	B	C**	D	E	F	G	H	J		
15	**1.760** 44.70	**1.650** 41.91	**1.600** 40.64	**1.400** 35.56	**2.385** 67.18	**2.075** 52.71	**.100** 2.54	**.100** 2.54	**.191** 4.85	**.125**	530841-2
25	**2.760** 70.10	**2.650** 67.31	**2.600** 66.04	**2.400** 60.96	**3.345** 84.96	**3.075** 78.11	**.100** 2.54	**.100** 2.54	**.191** 4.85	**.125** **.187**	530841-5 1-530841-6
50	**5.260** 133.60	**5.150** 130.81	**5.100** 129.54	**4.900** 124.46	**5.845** 148.46	**5.575** 141.60	**.100** 2.54	**.100** 2.54	**.191** 4.85	**.125**	1-530841-1

*Metric equivalent for post lengths are **.125** = 3.18; **.187** = 4.75
****C** dimension is card slot length.

Notes: 1. Other connector sizes can be made available, consult Tyco Electronics.
2. High temperature IR reflow compatible connectors can be made available, consult Tyco Electronics.

.125 [3.18] Centerline

No. of Dual Positions	Dimensions									Post Length*	Part Numbers
	A	B	C**	D	E	F	G	H	J		
28	**3.785** 96.14	**3.505** 89.03	**3.625** 92.08	**3.375** 85.73	**4.305** 109.35	**4.045** 102.74	**.125** 3.18	**.125** 3.18	**.241** 6.11	**.187**	3-531341-0[2]

*Metric equivalent for post lengths are **.125** = 3.18; **.187** = 4.75
****C** dimension is card slot length.
[1] Connector with Retention Feature.
[2] Connector with Mid-High Mounting Ears.

Notes: 1. Other connector sizes can be made available, consult Tyco Electronics.
2. High temperature IR reflow compatible connectors can be made available, consult Tyco Electronics.

For complete product information, order Catalog 82619

Products for Industrial & Commercial Applications
Dimensions are shown for reference purposes only.
Dimensions are in inches and millimeters unless otherwise specified. Values in brackets are metric equivalents.
Specifications subject to change.
Technical Support Center
1-800-522-6752
www.tycoelectronics.com

.100 [2.54] Right-Angle Solder Posts, with Low and No Mounting Ears

Material and Finish:

Housing—Black glass-filled polyester, 94V-0 rated

Contacts—Phosphor bronze, duplex plated as follows:
Plating A—.000030 [0.00076] gold in contact area, tin on posts, with entire contact nickel underplated
Plating B—.000015 [0.00038] gold in contact area, tin on posts, with entire contact nickel underplated

Related Product Data:

Performance Specifications—page 2011

Technical Documents:

Product Specification
108-9039

Intercontact Keying Plug

Material:

Natural color polyester

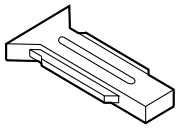

Part Number 650025-2
(**.100** [2.54] Centerline)

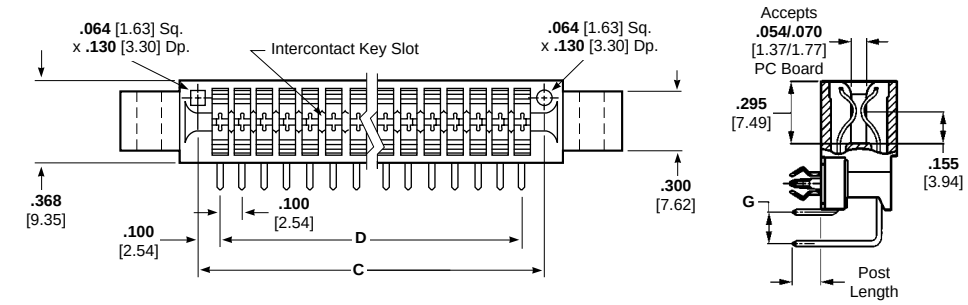

With Board Locks

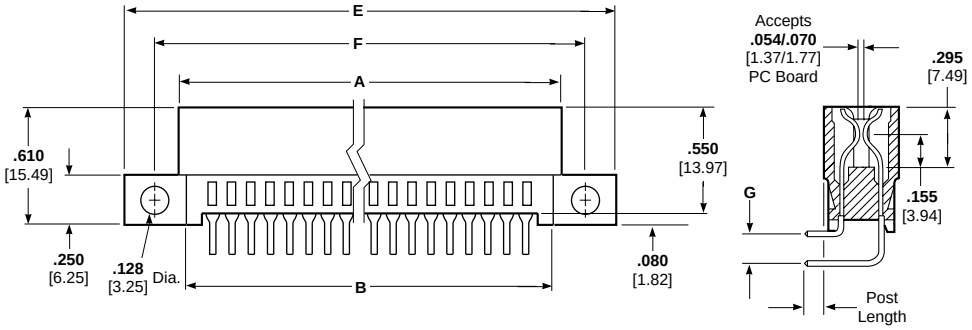

Low Mounting Ears

Low Mounting Ears

No. of Dual Positions	Dimensions							Post Length[2]	Part Numbers (Plating A)
	A	B	C*	D	E	F	G[1]		
12	**1.460** 37.08	**1.350** 34.29	**1.300** 33.02	**1.100** 27.94	**2.045** 51.94	**1.775** 45.08	**.100x .150**	**.090**	145089-1[3]
18	**2.060** 52.32	**1.950** 49.53	**1.900** 48.26	**1.700** 43.18	**2.645** 67.18	**2.375** 60.32	**.100x .150**	**.090**	645384-1
20	**2.260** 57.40	**2.150** 54.61	**2.100** 53.34	**1.900** 48.26	**2.845** 72.30	**2.575** 65.40	**.100x .150**	**.090**	645384-3

*__C__ dimension is card slot length.

[1] Metric equivalent for **.100 x .150** and **.100 x .200** are [2.54 x 3.81] and [2.54 x 5.08].
[2] Metric equivalent for post length is **.090** = [2.27].
[3] Connector with Board Locks.

Note: Other connector sizes can be made available, consult Tyco Electronics.

No Mounting Ears

No. of Dual Positions	Dimensions					Post Length[2]	Part Numbers	
	A	B	C*	D	G[1]		Plating A	Plating B
15	**1.760** 44.70	**1.650** 41.91	**1.600** 40.64	**1.400** 35.56	**.100x .150**	**.090**	650118-1	—
17	**1.960** 49.78	**1.850** 46.99	**1.800** 45.72	**1.600** 40.64	**.100x .200**	**.090**	650187-1	—
25	**2.760** 70.10	**2.350** 67.61	**2.600** 66.04	**2.400** 60.96	**.100x .150**	**.090**	—	532600-2
31	**3.360** 85.34	**3.250** 82.55	**3.200** 81.28	**3.000** 76.20	**.100x .150**	**.090**	—	532600-4
32	**3.460** 87.88	**3.350** 85.09	**3.300** 83.82	**3.100** 78.74	**.100x .150**	**.090**	—	532600-5
19	**2.160** 54.86	**2.750** 69.85	**2.700** 68.58	**1.800** 45.72	**.100x .150**	**.090**	—	532600-6

*__C__ dimension is card slot length.

[1] Metric equivalent for **.100 x .150** and **.100 x .200** are [2.54 x 3.81] and [2.54 x 5.08].
[2] Metric equivalent for post length is **.090** = [2.27].

Notes: 1. Other connector sizes can be made available, consult Tyco Electronics.
2. High temperature IR reflow compatible connectors can be made available, consult Tyco Electronics.

For complete product information, order Catalog 82619

Products for Industrial & Commercial Applications
Dimensions are shown for reference purposes only.
Dimensions are in inches and millimeters unless otherwise specified. Values in brackets are metric equivalents.
Specifications subject to change.
Technical Support Center
1-800-522-6752
www.tycoelectronics.com

.100 [2.54] Centerline Vertical Solder Posts, Retention Feature, Without Mounting Ears

Material and Finish:

Housing—Black glass-filled polyester, 94V-0 rated

Contacts—Phosphor bronze, duplex plated as follows:

Plating A—.000030 [0.00076] gold in contact area, tin on posts, with entire contact nickel underplated

Plating B—.000015 [0.00038] gold in contact area, tin on posts, with entire contact nickel underplated

Plating C—Gold flash in contact area, tin on posts, with entire contact nickel underplated

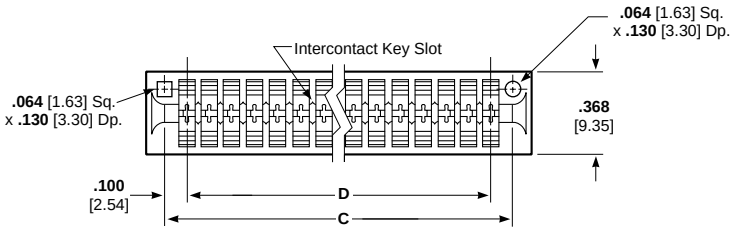

Technical Documents:

Product Specification
108-9039

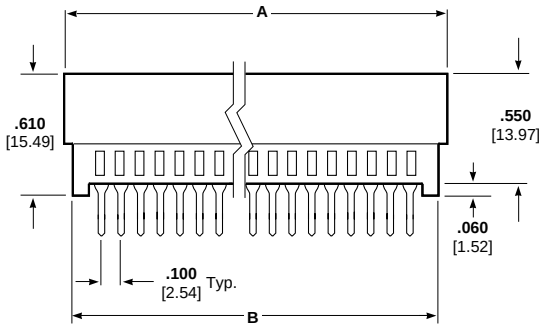

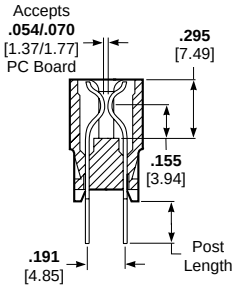

Intercontact Keying Plug

Material:

Natural color polyester

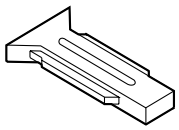

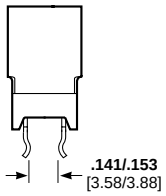

Retention Feature

Part Number 650025-2
(**.100** [2.54] Centerline)

No. of Dual Positions	Dimensions				Post Length*	Retention Feature	Part Numbers
	A	B	C**	D			Plating A
18	**2.060** 52.32	**1.950** 49.53	**1.900** 48.26	**1.700** 43.18	**.125**	3-6, 31-34	645235-4
31	**3.360** 85.34	**3.250** 82.55	**3.200** 81.28	**3.000** 76.20	**.125**	3-6, 29-32 or 31-34, 57-60	645235-1
50	**5.260** 133.60	**5.150** 130.81	**5.100** 129.54	**4.900** 124.46	**.125**	3-6, 49-52, 95-98	645235-3
60	**6.260** 159.00	**6.150** 156.21	**6.100** 154.94	**5.900** 149.86	**.125**	3-6, 55-58, 63-66, 115-118	645235-8

*Metric equivalent for post length is **.125** = [3.18].
**__C__ dimension is card slot length.

Notes: 1. Other connector sizes can be made available, consult Tyco Electronics.
2. High temperature IR reflow compatible connectors can be made available, consult Tyco Electronics.

For complete product information, order Catalog 82619

Products for Industrial & Commercial Applications
Dimensions are shown for reference purposes only.
Dimensions are in inches and millimeters unless otherwise specified. Values in brackets are metric equivalents.
Specifications subject to change.
Technical Support Center
1-800-522-6752
www.tycoelectronics.com

.100 [2.54] Centerline, Special 18/31 Dual Combination Connector, Vertical Solder Posts, Without Mounting Ears

Material and Finish:

Housing—Black glass-filled polyester, 94V-0 rated, except where noted

Contacts—Phosphor bronze, plated with .000030 [0.00076] gold in contact area (except where noted), tin on posts, with entire contact nickel underplated

Technical Documents:

Product Specification
108-9039

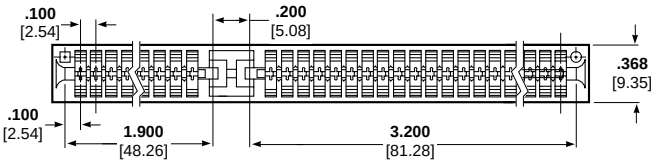

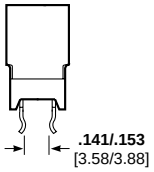

Retention Feature

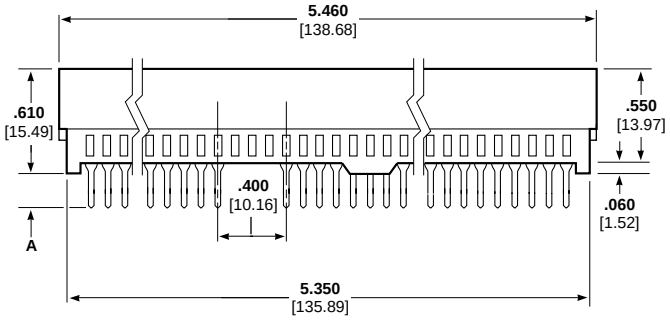

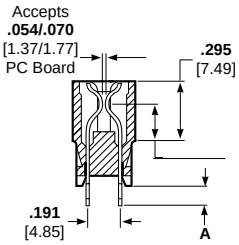

Solder Posts

Intercontact Keying Plug

Material:

Natural color polyester

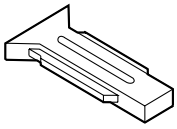

Part Number 650025-2
(**.100** [2.54] Centerline)

No. of Dual Positions	Post Type	Dimension A	Retention Feature	Part Numbers
52	Solder Posts	**.125** 3.18	3-6, 41, 42, 51, 52, 93-96	645169-2 536128-1[1]
52	Solder Posts	**.125** 3.18	None	645169-3
52	Solder Posts	**.125** 3.18	3-14, 41, 42, 51, 52, 85-96	645169-4
52	Solder Posts	**.125** 3.18	5, 6, 31, 32, 41, 42, 93, 94	176139-1[2]
52	Solder Posts	**.187** 4.75	None	650616-1

[1] Housing material is high temperature glass-filled polyester, gray.
[2] Contact area is gold flash.

Notes: 1. Card slot length is **5.300** [134.62].
2. Other connector sizes can be made available, consult Tyco Electronics.
3. High temperature IR reflow compatible connectors can be made available, consult Tyco Electronics.

Product Facts

- **Low profile housing is .460 [11.68] deep**
- **6 through 43 dual positions on .156 [3.96] centerline; 6 though 50 dual positions on .125 [3.18] centerline**
- **Solder eyelet for wire-to-board or solder post for mother-daughter board application**
- **Selective gold plating of contact area for high performance at low cost**
- **Alternate platings are available on request**
- **Contacts bifurcated for redundancy**
- **Tin plate for high solderability of solder eyelets and posts**
- **Accepts .055-.070 [1.40-1.78] thick printed circuit boards**
- **Housings available with or without mounting ears**
- **Intercontact keying available**
- **UL 94V-0 rated, glass-filled polyester housings**
- **Variety of solder post lengths**
- **5 ampere current rating per contact***
- **Recognized under the Component Program of Underwriters Laboratories Inc. File No. E28476**



For printed circuit board packaging, AMP Low Profile Edge Connectors provide high performance, low cost connections on .125 [3.18] and .156 [3.96] centerline spacings. .100 [2.54] centerline connectors can be made available, consult Tyco Electronics.

Mounted connector housings extend only .460 [11.68] from the mother board to allow efficient use of available space.

These low profile connectors are available in 6 through 43 dual position sizes on .156 [3.96] centerline spacing and with 6 through 50 dual positions on .125 [3.18] centers. Connectors are supplied with either solder posts for mother-daughter board applications or solder eyelet contacts for wire-to-board use.

Low Profile Edge Connectors feature clear slot entry and accept .055-.070 [1.40-1.78] thick double-sided printed circuit boards. Solder posts are available with .150 [3.18] and .180 [4.57] long tails on .140 [3.56] or .200 [5.08] row-to-row spacing.

Impact-resistant thermoplastic housing, UL rated 94V-0, have molded-in cavity identification and are available with or without mounting ears. Additional features of the housings include intercontact keying provisions, probe slots and identification of number one position.

The precision formed contacts made of phosphor bronze are gold plated on the contact mating surface only. This selective plating provides high reliability while maintaining low cost. Solder eyelets and posts are tin plated for excellent solderability. The contact is bifurcated for redundancy. Shorting contacts are available.

All connector configurations are furnished preloaded. Selectively loaded connectors can be made available for added economy.

***Consult Tyco Electronics engineering when paralleling contacts for power applications.**

For complete product information, order Catalog 82619

Products for Industrial & Commercial Applications

Dimensions are shown for reference purposes only.

Dimensions are in inches and millimeters unless otherwise specified. Values in brackets are metric equivalents.

Specifications subject to change.

Technical Support Center
1-800-522-6752
www.tycoelectronics.com

Low Profile Connectors, .125 [3.18] Centerline

Material and Finish:

Housing—Green, glass-filled polyester

Contacts—Phosphor bronze, duplex plated .000030 [0.00076] gold in contact area; .000100 [0.00254] bright tin on posts, with entire contact underplated .000030 [0.00076] nickel

Technical Documents:

Product Specification
108-9044

Instruction Sheet
408-7772

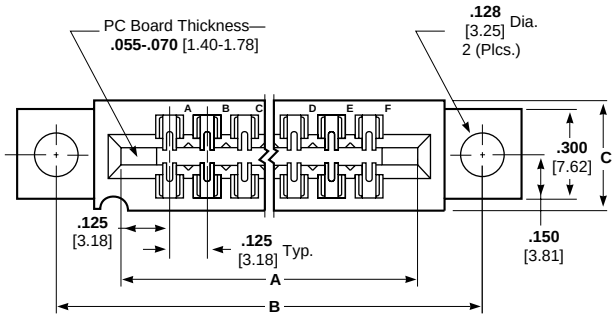

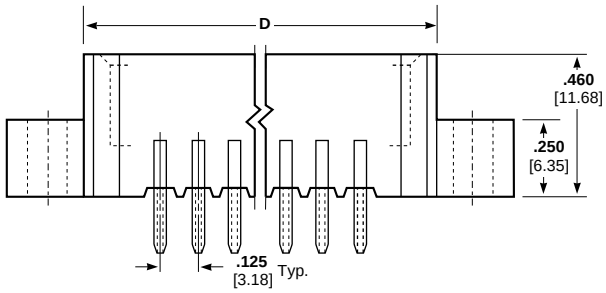

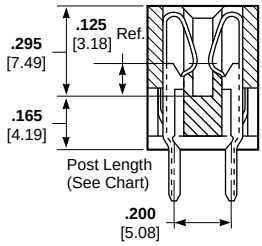

Flow Solder Post
.200 [5.08] Row-to-Row Spacing

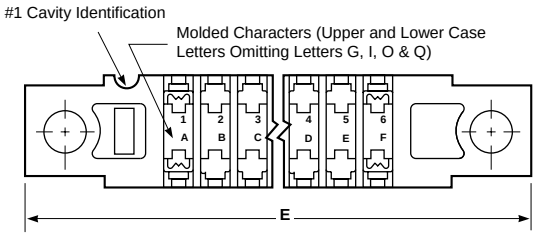

Flow Solder Post
.200 [5.08] Row-to-Row Spacing

No. of Dual Positions	Dimensions					Post Length*	Without Mounting Ears
	A	B	C	D	E		
6	**.875** 22.23	—	**.370** 9.40	**1.035** 26.29	—	**.150**	2-530671-1
15	**2.000** 50.80	**2.420** 61.47	**.370** 9.40	**2.160** 54.86	**2.680** 68.07	**.150**	2-530671-3

For complete product information, order Catalog 82619

Products for Industrial & Commercial Applications
Dimensions are shown for reference purposes only.
Dimensions are in inches and millimeters unless otherwise specified. Values in brackets are metric equivalents.
Specifications subject to change.
Technical Support Center
1-800-522-6752
www.tycoelectronics.com

Low Profile Connectors, .156 [3.96] Centerline

Material and Finish:

Housing—Green, glass-filled polyester

Contacts—Phosphor bronze, duplex plated .000030 [0.00076] gold in contact area; .000100 [0.00254] bright tin on posts, with entire contact underplated .000030 [0.00076] nickel

Insert—Brass

Technical Documents:

Product Specification
108-9044

Instruction Sheet
408-7772

Mounting Ear with Insert

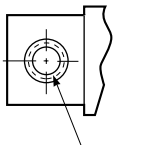

Threaded Inserts
4-40 NC-2B
(2 per connector)

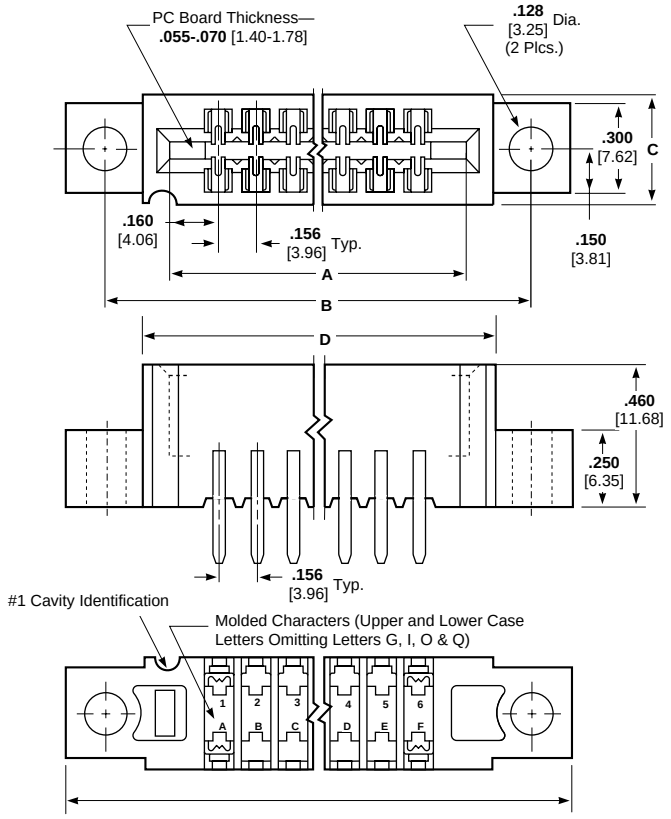

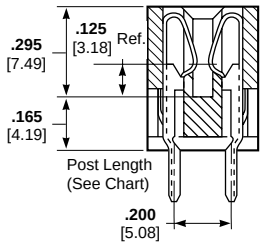

Flow Solder Post
.200 [5.08] Row-to-Row Spacing

Flow Solder Post .200 [5.08] Row-to-Row Spacing

No. of Dual Positions	Dimensions A	B	C	D	E	Post Length*	With Mounting Ears	With Mounting Ears and Inserts	Without Mounting Ears
6	**1.100** 27.94	**1.535** 38.99	**.370** 9.40	**1.240** 31.50	**1.785** 45.34	**.150**	—	—	2-530666-1
10	**1.724** 43.79	**2.159** 54.84	**.370** 9.40	**1.864** 47.35	**2.409** 61.19	**.150**	2-530655-2	—	—
15	**2.504** 63.60	**2.939** 74.65	**.370** 9.40	**2.644** 67.16	**3.189** 81.00	**.150**	2-530655-4	—	—
22	**3.596** 91.34	**4.031** 102.39	**.370** 9.40	**3.736** 94.89	**4.281** 108.74	**.150**	—	—	2-530666-6
						.180	—	2-530678-6	—
43	**6.872** 174.55	**7.307** 185.60	**.437** 11.10	**7.012** 178.10	**7.557** 191.95	**.150**	—	3-530677-3	—

Flow Solder Post .140 [3.56] Row-to-Row Spacing and Solder Eyelet Contact .235 [5.97] Row-to-Row Spacing

No. of Dual Positions	Dimensions A	B	C	D	E	Post Length*	Solder Eyelet Contact With Mounting Ears
18	**2.972** 75.49	**3.407** 86.54	**.370** 9.40	**3.112** 79.04	**3.657** 92.89	—	2-530654-5

*Metric equivalents for post length are **.150** = [3.81]; **.180** = [4.57].

[1] For **.040** [1.02] diameter hole.

Note: Other connector sizes can be made available, consult Tyco Electronics.

For complete product information, order Catalog 82619

Products for Industrial & Commercial Applications

Dimensions are shown for reference purposes only.

Dimensions are in inches and millimeters unless otherwise specified. Values in brackets are metric equivalents.

Specifications subject to change.

Technical Support Center
1-800-522-6752
www.tycoelectronics.com

AMPMODU 50/50 Grid Connectors

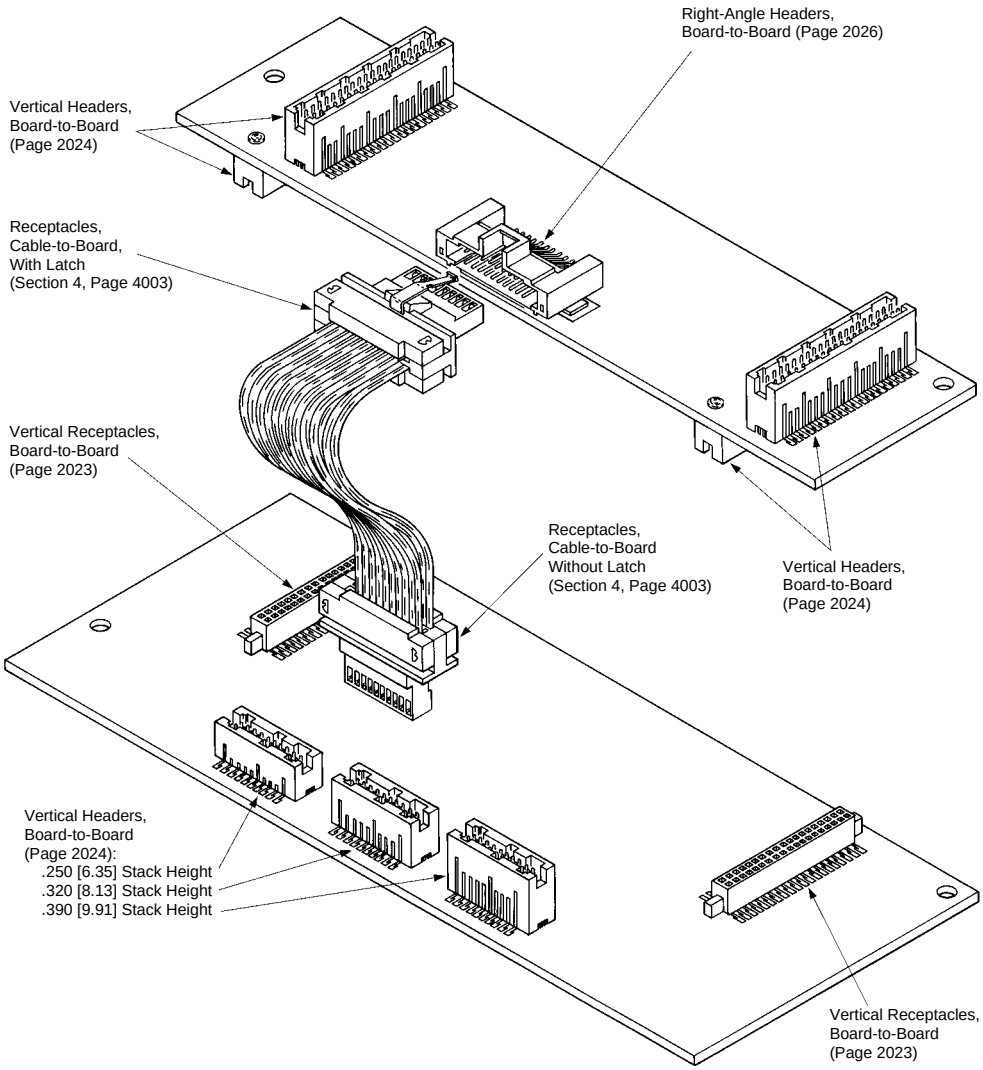

Performance Specifications:

Board-to-Board Connectors, Vertical and Right-Angle —

Mating Force — 6.4 oz (1.78 N] max. per contact

Unmating Force — 1.0 oz [0.28 N] min. per contact

Durability — Tested to 200 cycles min.

Current Rating — (30°C T rise): .5 ampere per contact

Operating Temperature Range — -65°C to +105°C

Termination Resistance — 16 milliohms max. (initial)

Insulation Resistance — 5000 megohms min. (initial)

Dielectric Withstanding Voltage — 300 VAC

Cable-to-Board Connectors:

Mating Force — 6.4 oz (1.78 N] max. per contact

Unmating Force Without Latch — .5 oz [0.14 N] min. per contact

Durability — Tested to 200 cycles min.

Current Rating — (10°C T rise): .5 ampere per contact

Operating Temperature Range — -65°C to +105°C

Termination Resistance — 25 milliohms max. (initial and final)

Insulation Resistance — 5000 megohms min. (initial)

Dielectric Withstanding Voltage — 300 VAC

Produced under a Quality Management System certified to ISO 9001

A copy of the certificate is available upon request.

ISO 9001 Certified

For complete product information, order Catalog 1307819

Board-to-Board Vertical Receptacles and Headers

Product Facts

- Surface-mount products for parallel board-to-board applications, as well as right-angle board-to-board and cable-to-board applications
- High density .050 x .050 [1.27x1.27] centerline grid
- Three board-to-board stack heights: .250 [6.35], .320 [8.13] and .390 [9.91]
- Non-protrusive metallic holddowns
- Reliable dual beam receptacle contacts for redundant contact
- Duplex plated receptacle and post contacts; gold plated on mating areas, tin-lead plated on tails
- Compatible with standard surface-mount processing (VPR and IR)
- Receptacle and header allow for drainage of processing fluids
- Tape and reel packaging available, contact AMP for details
- Polarized header and receptacle assemblies
- Sizes of 10, 20, 30, 40, 50, 60, 70, 80 and 100 positions
- Recognized under the Component Program of Underwriters Laboratories Inc., File No. E28476
- Certified by Canadian Standards Association File No. LR7189

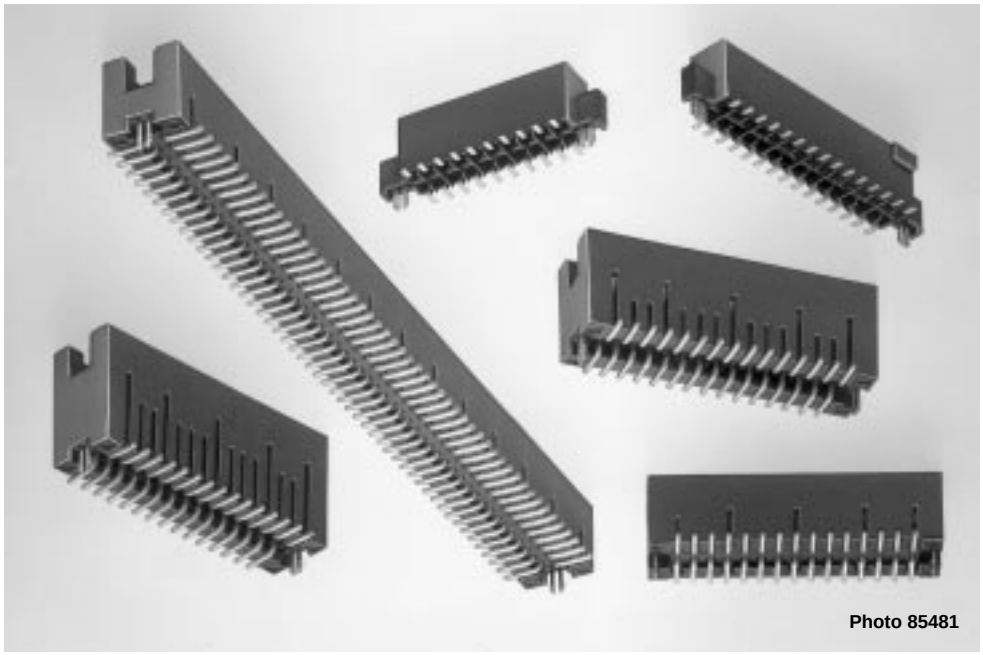

Photo 85481

AMPMODU 50/50 Grid Vertical Headers and Receptacles are designed for parallel board-to-board stacking in high density applications.

Right-angle board-to-board and cable-to-board applications are also possible, since the vertical receptacles also mate with non-latching right-angle headers (page 6) and the vertical headers also mate with non-latching cable connectors.

Available are double row, vertical shrouded headers and receptacles in sizes ranging from 10 through 100 positions (in 10 position increments).

Parallel board-to-board stack heights of .250 [6.35], .320 [8.13] and .390 [9.91] are achievable by selection of the appropriate header. The receptacle is the same for all three stack height headers.

Non-protrusive metallic holddowns are designed for use in .062 [1.57] or thicker PC boards and allow surface mounting to both sides of the board. In addition to providing retention during processing, the holddowns are soldered during reflow and therefore provide long term strain relief for the lead solder joints.

AMPMODU 50/50 Grid Vertical Headers and Receptacles are compatible with standard surface-mount processes; IR (infrared) and VPR (vapor phase reflow). The surface-mount connectors have been designed so that dimensioning, tolerances, referenced datums, holddown characteristics and packaging methods result in a system that is compatible with robotic assembly.

The headers and receptacles feature polarization to prevent misalignment.

Non-Protrusive Metallic Holddowns

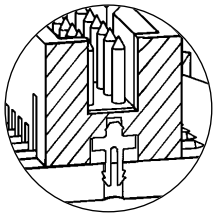

Three Board Stack Heights

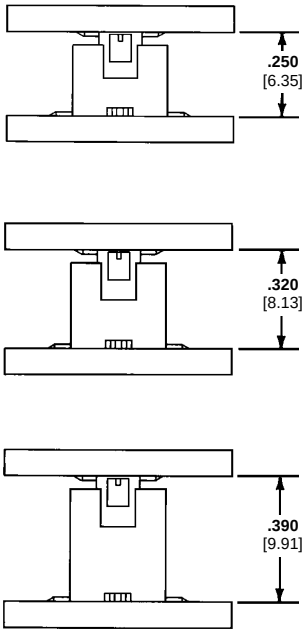

For complete product information, order Catalog 1307819

Products for Industrial & Commercial Applications

Dimensions are shown for reference purposes only.

Dimensions are in inches and millimeters unless otherwise specified. Values in brackets are metric equivalents.

Specifications subject to change.

Technical Support Center
1-800-522-6752
www.tycoelectronics.com

Board-to-Board Vertical Receptacles, Double Row, .050 x .050 [1.27 x 1.27] Centerline

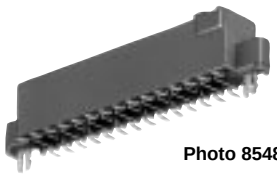

Photo 85482

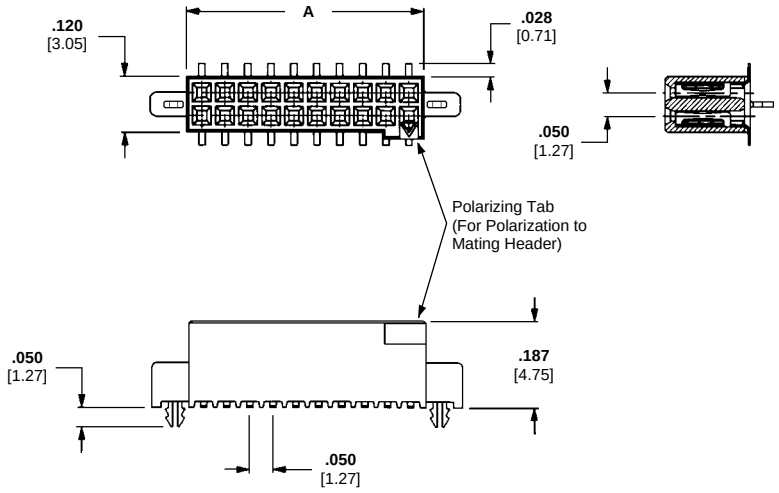

Material and Finish:

Housing—Glass-filled thermoplastic, black, 94V-0 rated

Contacts—Beryllium copper; duplex plated .000030 [0.00076] gold in mating area, .000150 [0.00381] tin-lead on solder tail, with entire contact underplated .000050 [0.00127] nickel

Holddown—Copper alloy; plated .000150 [0.00381] tin-lead over .000050 [0.00127] nickel

Related Product Data:

Mating Headers — pages 2024, 2026

Performance Specifications — page 2021

Technical Documents:

Product Specification
108-1332

Application Specification
114-7010

Packaging
Tube or Tape and Reel

No. of Positions	Dimension A	Receptacle Part Numbers	
		Tube	Tape and Reel*
10	**.266** 6.75	104652-1	147384-1
20	**.516** 13.11	104652-2	147384-2
30	**.766** 19.46	104652-3	147384-3
40	**1.016** 25.81	104652-4	147384-4
50	**1.266** 32.16	104652-5	147384-5
60	**1.516** 38.51	104652-6	147384-6
70	**1.766** 44.86	104652-7	147384-7
80	**2.016** 51.21	104652-8	147384-8
100	**2.516** 63.91	1-104652-0	147384-9

* Parts packaged in tape and reel have vacuum pick and place cover.

Board-to-Board Vertical Headers, Double Row, .050 x .050 [1.27 x 1.27] Centerline

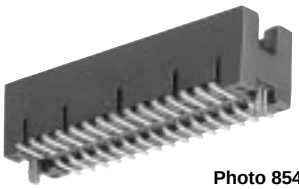

Photo 85480

For .250 [6.35] Mated Height

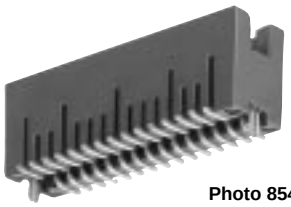

Photo 85479

For .320 [8.13] Mated Height

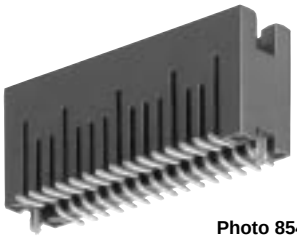

Photo 85478

For .390 [9.91] Mated Height

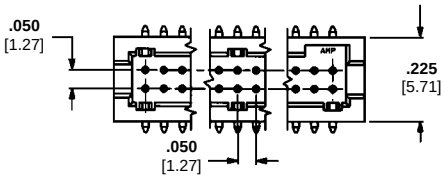

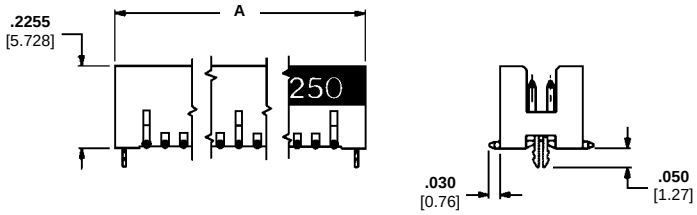

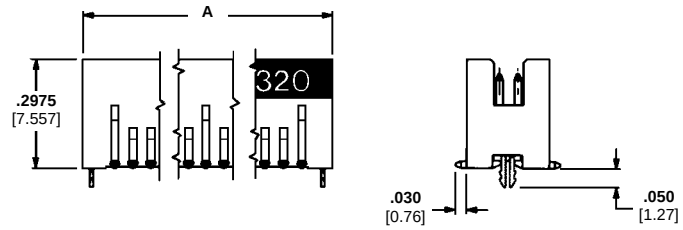

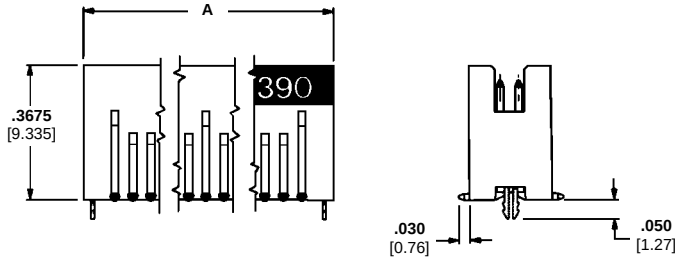

Material and Finish:

Housing—Glass-filled thermoplastic, black, 94V-0 rated

Contacts—Phosphor bronze; duplex plated .000030 [0.00076] gold in mating area, .000150 [0.00381] tin-lead on solder tail, with entire contact underplated .000050 [0.00127] nickel

Holddown—Copper alloy; plated .000150 [0.00381] tin-lead over .000050 [0.00127] nickel

Related Product Data:

Mating Receptacles — page 2023

Performance Specifications — page 2021

Technical Documents:

Product Specification
108-1332

Application Specification
114-7010

Packaging
Tube or Tape and Reel

No. of Positions	Dimension A	Header Part Numbers					
		.250 [6.35] Mated Height		.320 [8.13] Mated Height		.390 [9.91] Mated Height	
		Tubes	Tape & Reel*	Tubes	Tape & Reel*	Tubes	Tape & Reel*
10	**.372** 9.44	104655-1	147381-1	104656-1	147382-1	104693-1	147383-1
20	**.622** 15.79	104655-3	147381-2	104656-2	147382-2	104693-2	147383-2
30	**.872** 22.14	104655-4	147381-3	104656-3	147382-3	104693-3	147383-3
40	**1.122** 28.49	104655-5	147381-4	104656-4	147382-4	104693-4	147383-4
50	**1.372** 34.84	104655-6	147381-5	104656-5	147382-5	104693-5	147383-5
60	**1.622** 41.19	104655-7	147381-6	104656-6	147382-6	104693-6	147383-6
70	**1.872** 47.54	104655-8	147381-7	104656-7	147382-7	104693-7	147383-7
80	**2.122** 53.89	104655-9	147381-8	104656-8	147382-8	104693-8	147383-8
100	**2.622** 66.59	1-104655-1	147381-9	1-104656-0	147382-9	1-104693-0	147383-9

*Parts packaged in tape and reel have vacuum pick and place cover.

For complete product information, order Catalog 1307819

Products for Industrial & Commercial Applications
Dimensions are shown for reference purposes only.
Dimensions are in inches and millimeters unless otherwise specified. Values in brackets are metric equivalents.
Specifications subject to change.
Technical Support Center
1-800-522-6752
www.tycoelectronics.com

Board-to-Board Right-Angle Headers

Product Facts

- Surface-mount products for right-angle board-to-board and cable-to-board applications
- Double-row, right-angle shrouded headers
- High density .050 x .050 [1.27 x 1.27] centerline grid
- Latching and non-latching versions available
- Non-protrusive metallic holddowns
- Metallic tabs, when soldered to PC board pad, provide added mechanical support
- Duplex plated post contacts; gold plated on mating area, tin plated on tails
- Compatible with standard surface-mount processing (VPR and IR)
- Standoffs on header housings allow for drainage of processing fluids
- All headers are polarized
- Sizes of 10, 20, 30, 40, 50, 60, 70, 80 and 100 positions
- Recognized under the Component Program of Underwriters Laboratories Inc., File No. E28476
- Certified by Canadian Standards Association File No. LR7189



AMPMODU 50/50 Grid Right-Angle Headers will accommodate a variety of high density packaging applications; right-angle board-to-board applications when mated with vertical receptacles (page 3) and right-angle cable-to-board applications when mated with cable connectors. The small .050 x .050 [1.27 x 1.27] centerline contact spacing allows efficient use of the PC board area.

Mechanical support of the headers to the PC board is provided by non-protrusive metallic holddowns designed for .062 [1.57] or thicker PC boards. These holddowns are of the same design as those used in the vertical headers (page 4) and receptacles (page 3). There are also metallic tabs that are soldered to the surfaces of the PC board pads for added support.

AMPMODU 50/50 Grid Right-Angle Headers are available in double-row, in either latching or non-latching versions, and in sizes ranging from 10 through 100 positions (in 10 position increments). The latching version provides positive retention when mated with the latching cable connector. All headers feature polarization to prevent misalignment during mating.

Board-to-Board Right-Angle Headers, Double Row, .050 x .050 [1.27 x 1.27] Centerline

Non-Latching Header

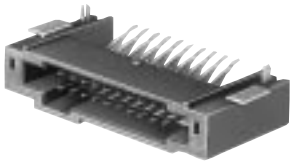

Latching Header

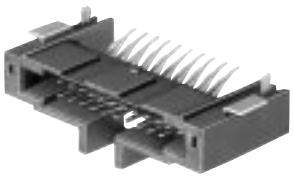

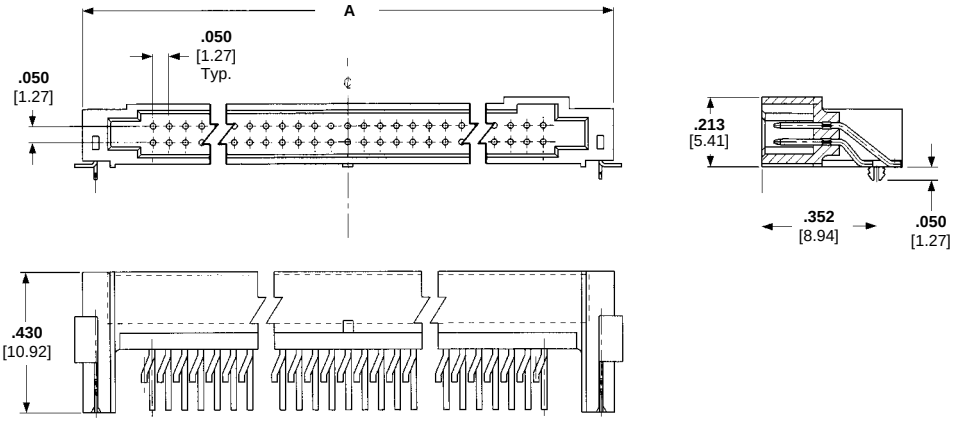

Material and Finish:

Housing — Liquid crystal polymer, black, 94V-0 rated

Contacts — Brass; duplex plated .000030 [0.00076] gold in mating area, .000150 [0.000381] tin-lead on solder tail, with entire contact underplated .000050 [0.00127] nickel

Holddown — Copper alloy; plated .0000150 [0.00381] tin-lead over .000050 [0.00127] nickel

Related Product Data:

Mating Receptacles — page 2023

Performance Specifications — page 2021

Technical Documents:

Product Specification
108-1443

Application Specification
114-7010

Packaging
Tube

No. of Positions	Dimension A	Header Part Numbers	
		Latching	Non-Latching
10	**.630** 16.00	104895-1	104894-1
20	**.880** 22.35	104895-2	104894-2
30	**1.130** 28.70	104895-3	104894-3
40	**1.380** 35.05	104895-4	104894-4
50	**1.630** 41.40	104895-5	104894-5
60	**1.880** 47.75	104895-6	104894-6
70	**2.130** 54.10	104895-7	104894-7
80	**2.380** 60.45	104895-8	104894-8
100	**2.880** 73.15	1-104895-0	1-104894-0

Note: Refer to Tyco Electronics Customer Drawings for additional PC board layout information and dimensional tolerances.

For complete product information, order Catalog 1307819

Products for Industrial & Commercial Applications
Dimensions are shown for reference purposes only.
Dimensions are in inches and millimeters unless otherwise specified. Values in brackets are metric equivalents.
Specifications subject to change.
Technical Support Center
1-800-522-6752
www.tycoelectronics.com

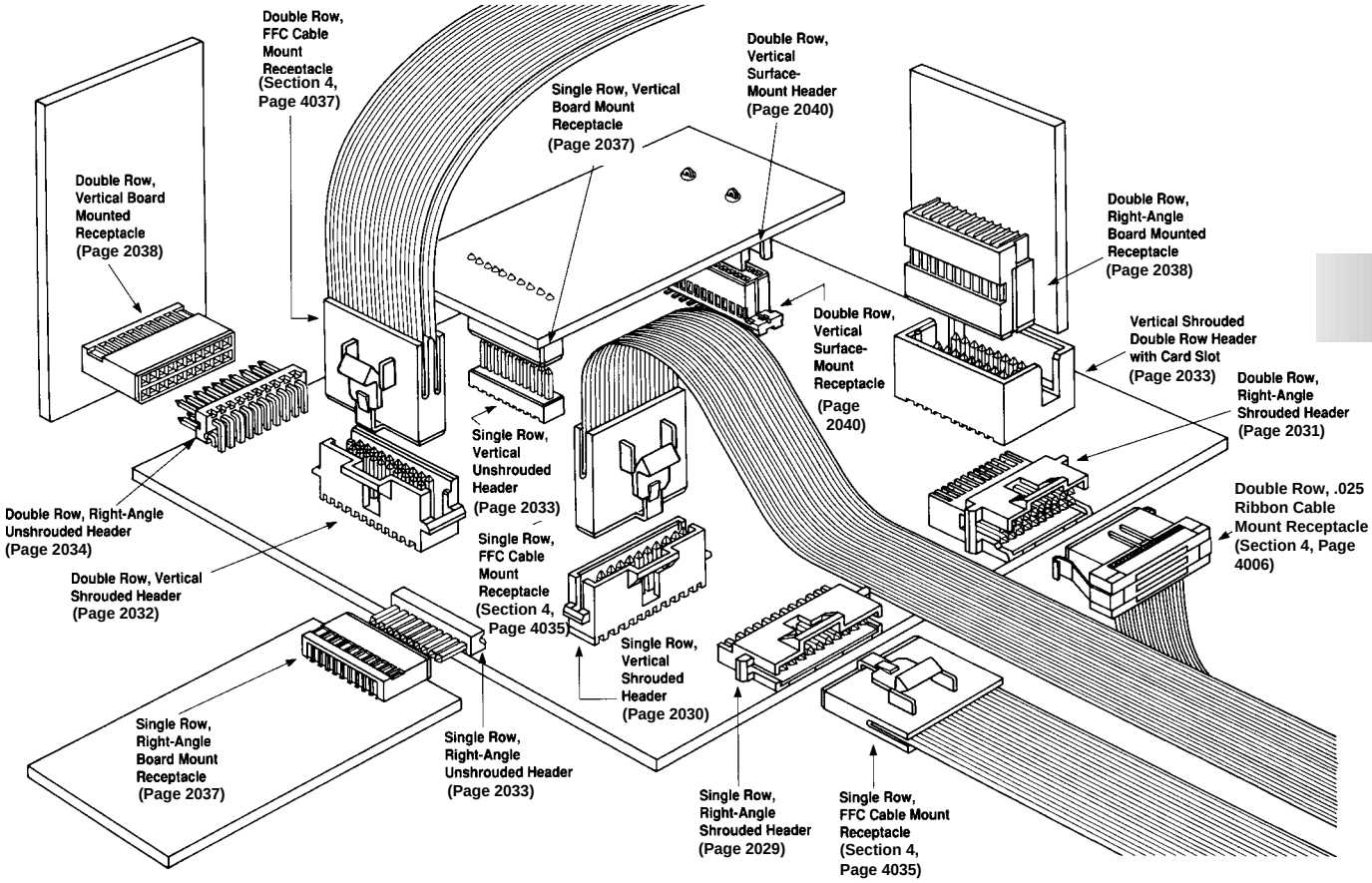

2 PCB and Wire Connectors

■ **Recognized under the Component Program of Underwriters Laboratories Inc. File No. E28476**

■ **Certified by Canadian Standards Association*, File No. LR 7189**

*CSA certification pending on certain products, as noted.

Dimensioning:

Dimensions are in inches and millimeters. Values in brackets are metric equivalents. Metric symbols used are:

mm (millimeter)
cm (centimeter)
m (meter)
mm² (square millimeter)
C (Celsius)
N (newton)
kg (kilogram)

■ **Produced under a Quality Management System certified to ISO 9001**

A copy of the certificate is available upon request.

The AMPMODU System 50 connector family includes a wide variety of high density board-to-board (thru-hole and surface-mount) and cable-to-board connectors. System 50 is composed of one- and two- row receptacles and post headers on .050 x .100 [1.27 x 2.54] spacing between contacts for extreme density and efficient use of printed circuit board area.

System 50 receptacles and header assemblies can be categorized in three groups: board-mount headers, board-mount receptacles and cable-to-board receptacles. Receptacle contacts and mating .015 [0.38] square posts are formed from high conductivity copper alloy and are selectively plated with gold for higher performance and reliability.

Board-mounted thru-hole post headers and receptacle connectors are available for right-angle and vertical mating configurations. Surface-mounted connectors are available in vertical, double row styles for parallel stacking applications. Shrouded post headers provide polarization to mating cable receptacles and aid alignment of mating connectors. Unshrouded headers allow close stacking of daughter cards. Vertical stacking connectors space parallel mated boards as shown in the illustration on page 58. Housings on all board-mount assemblies are made of high temperature tolerant materials and incorporate stand-offs for free drainage of flux cleaning solutions.

Cable-to-board connectors have integral latches for positive locking to shrouded mating headers (thru-hole or surface-mount). Ribbon cable connectors mass terminate 30 AWG [0.05 mm²] solid and 32 AWG [0.03 mm²] stranded, .025 [0.64] centerline ribbon cable with PVC or TEFLON insulation. (See Section 4).

Connectors for mass termination to FFC cable or flexible etched circuitry have dual beam contacts; options include shielded cable and solder tabs. Both types of cable connectors are available as component parts and as completed assemblies. (See Section 4).

The variety of components and application possibilities, combined with small size and outstanding quality, make System 50 perfect for high density systems.

For complete product information, order Catalog 1307819

Products for Industrial & Commercial Applications
Dimensions are shown for reference purposes only.
Dimensions are in inches and millimeters unless otherwise specified. Values in brackets are metric equivalents.
Specifications subject to change.
Technical Support Center 1-800-522-6752 www.tycoelectronics.com

Thru-Hole Headers––Shrouded, .050 x .100 [1.27 x 2.54] Centerline, Board-to-Board

Product Facts

- High density; contacts spaced on .050 x .100 [1.27 x 2.54] centers
- Single row; select sizes 4 thru 50 positions
- Double row; select sizes 10 thru 100 positions
- Stand-offs for ease of cleaning
- High temperature tolerant thermoplastic housings
- Shrouded and unshrouded headers available in single and double row, vertical and right-angle configurations

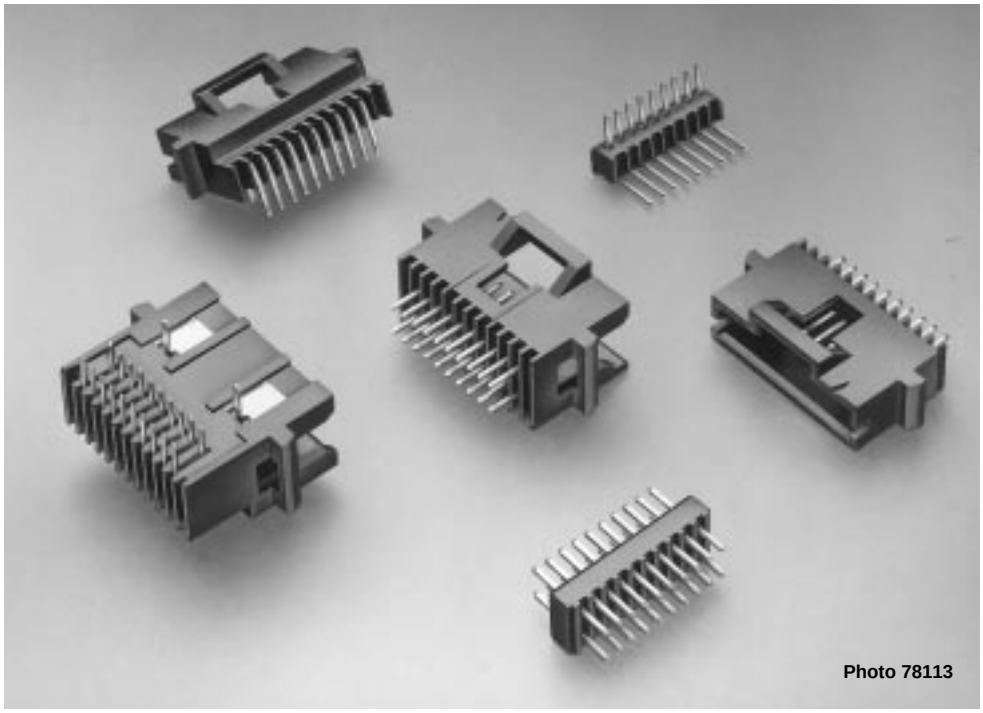

Photo 78113

The AMPMODU System 50 interconnection system is designed to meet industry's need for a high density interconnect system. The Board Mounted Thru-Hole Headers are available in shrouded and unshrouded versions. They are composed of single and double row post headers with .050 x .100 [1.27 x 2.54] spacing between contacts for extreme density and efficient use of printed circuit board area. The headers are available in 4 through 50 positions, in a single row configuration, and 10 through 100 positions, in a double row design.

Board mounted post headers are available in right-angle and vertical configurations. Shrouded post headers provide polarization and alignment features for mating printed circuit boards and cable connectors, while unshrouded headers allow close stacking of daughter cards. Housings for the headers are made of black thermoplastic material with a 94V-0 rating. The housings have stand-offs for free drainage of flux cleaning solutions.

For complete product information, order Catalog 1307819

Products for Industrial & Commercial Applications
Dimensions are shown for reference purposes only.
Dimensions are in inches and millimeters unless otherwise specified. Values in brackets are metric equivalents.
Specifications subject to change.
Technical Support Center
1-800-522-6752
www.tycoelectronics.com

Thru-Hole Headers––Shrouded, .050 x .100 [1.27 x 2.54] Centerline, Board-to-Board

Single Row, Right-Angle with Solder Clips

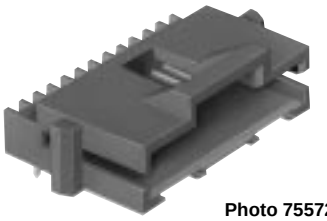

Photo 75572

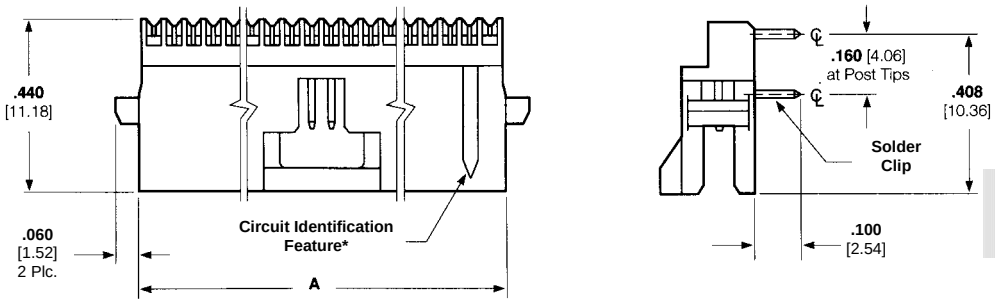

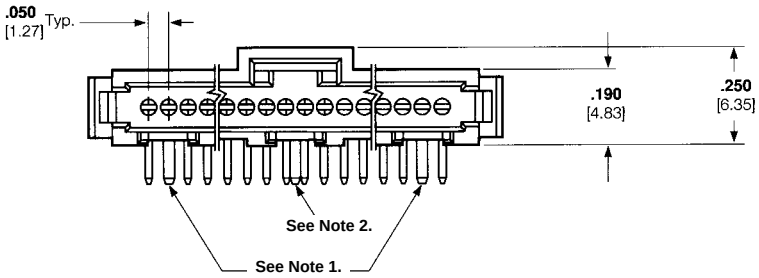

Material and Finish:

Housing—Black thermoplastic, 94V-0 rated

Contacts—Copper alloy, plated .000030 [0.00076] gold in mating area, .000150 [0.00381] tin-lead on solder posts, with entire contact underplated .000050 [0.00127] nickel

Related Product Data:

Performance Characteristics—page 2041

Mateable Connectors—page 2037

Technical Documents:

Product Specification
108-1093

Application Specification
114-25031

No. of Positions	Dimension A	Part Numbers
4	**.330** 8.38	104074-7
5	**.380** 9.65	104074-2
6	**.430** 10.92	104074-8
8	**.530** 13.46	1-104074-0
10	**.630** 16.00	104074-1
12	**.730** 18.54	1-104074-1
15	**.880** 22.35	104074-3
20	**1.130** 28.70	104074-4
22	**1.230** 31.24	1-104074-4
25	**1.380** 35.05	104074-5
28	**1.530** 38.86	2-104074-0
30	**1.630** 41.40	104074-6
36	**1.930** 49.02	1-104074-6
40	**2.130** 54.10	1-104074-7
45	**2.380** 60.45	1-104074-8
50	**2.630** 66.80	1-104074-9

*Circuit identification feature omitted on 4, 5 and 6 position headers.
Notes: [1] Solder Clips located as shown for 10 through 30 position headers.
[2] Solder Clips located as shown for 4 through 8 and 36 through 50 position headers.

Thru-Hole Headers––Shrouded, .050 x .100 [1.27 x 2.54] Centerline, Board-to-Board

Single Row, Vertical

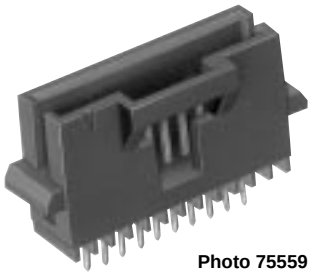

Photo 75559

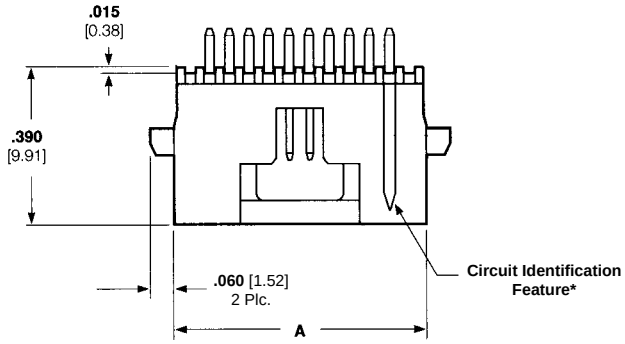

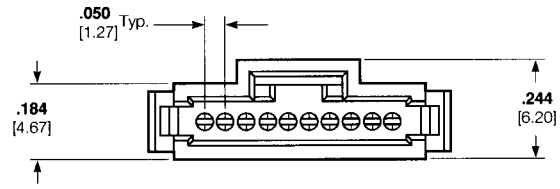

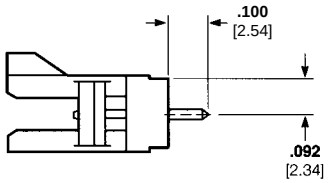

Material and Finish:

Housing—Black thermoplastic, 94V-0 rated

Contacts—Copper alloy, plated .000030 [0.00076] gold in mating area, .000150 [0.00381] tin-lead on solder posts, with entire contact underplated .00050 [0.00127] nickel

Related Product Data:

Performance Characteristics—page 2041

Mateable Connectors—page 2037

Board-to-Board Spacing—page 2041

Technical Documents:

Product Specification
108-1093

Application Specification
114-25031

No. of Positions	Dimension A	Part Numbers
4	**.330** 8.38	104071-7
5	**.380** 9.65	104071-2
6	**.430** 10.92	104071-8
8	**.530** 13.46	1-104071-0
10	**.630** 16.00	104071-1
12	**.730** 18.54	1-104071-1
15	**.880** 22.35	104071-3
17	**.980** 24.89	1-104071-3
20	**1.130** 28.70	104071-4
22	**1.230** 31.24	1-104071-4
25	**1.380** 35.05	104071-5
30	**1.630** 41.40	104071-6
36	**1.930** 49.02	1-104071-6
40	**2.130** 54.10	1-104071-7
50	**2.630** 66.80	1-104071-9

*Circuit identification feature omitted on 4, 5, and 6 position headers.

Thru-Hole Headers––Shrouded, .050 x .100 [1.27 x 2.54] Centerline, Board-to-Board

Double Row, Right-Angle with Solder Clips

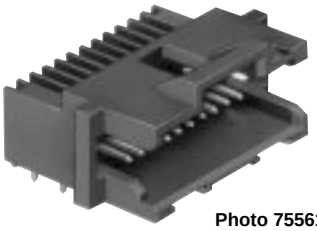

Photo 75561

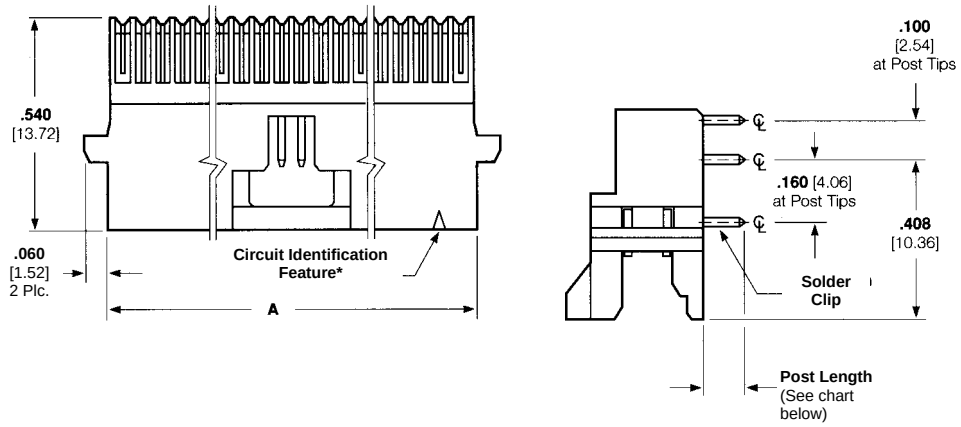

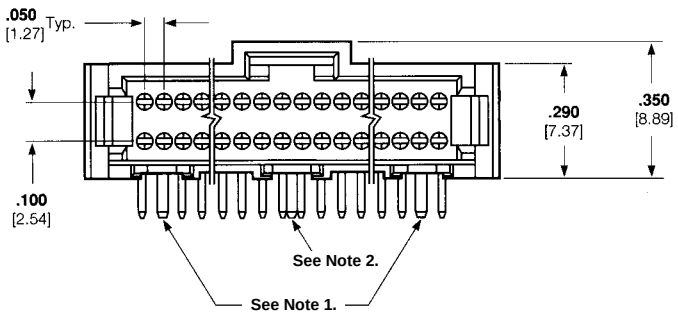

Material and Finish:

Housing—Black thermoplastic, 94V-0 rated

Contacts—Copper alloy, plated .000030 [0.00076] gold in mating area, .000150 [0.00381] tin-lead on solder posts, with entire contact underplated .000050 [0.00127] nickel

Related Product Data:

Performance Characteristics—page 2041

Mateable Connectors—pages 2038, 2040

Technical Documents:

Product Specification
108-1093

Application Specification
114-25031

No. of Positions	Dimension A	Part Numbers	
		Post Length	
		.100 [2.54]	.145 [3.68]
10	**.380** 9.65	104069-4	—
20	**.630** 16.00	104069-1	—
24	**.730** 18.54	1-104069-2	1-104477-0
26	**.780** 19.81	1-104069-3	—
30	**.880** 22.35	104069-5	104477-3
34	**.980** 24.89	1-104069-4	—
40	**1.130** 28.70	104069-6	104477-4
50	**1.380** 35.05	104069-2	104477-5
60	**1.630** 41.40	104069-7	104477-9
68	**1.830** 46.48	1-104069-8	—
72	**1.930** 49.02	1-104069-6	104477-1
80	**2.130** 54.10	104069-3	104477-6
100	**2.630** 66.80	1-104069-7	104477-7

*Circuit identification feature omitted on 8, 10 and 12 position headers.
Notes: 1 Solder Clips located as shown for 16 through 100 position headers.
2 Solder Clips located as shown for 8 through 12 and 60 through 100 position headers.

For complete product information, order Catalog 1307819

Products for Industrial & Commercial Applications
Dimensions are shown for reference purposes only.
Dimensions are in inches and millimeters unless otherwise specified. Values in brackets are metric equivalents.
Specifications subject to change.
Technical Support Center
1-800-522-6752
www.tycoelectronics.com

Thru-Hole Headers––Shrouded, .050 x .100 [1.27 x 2.54] Centerline, Board-to-Board

Double Row, Vertical

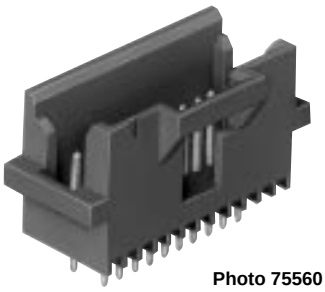

Photo 75560

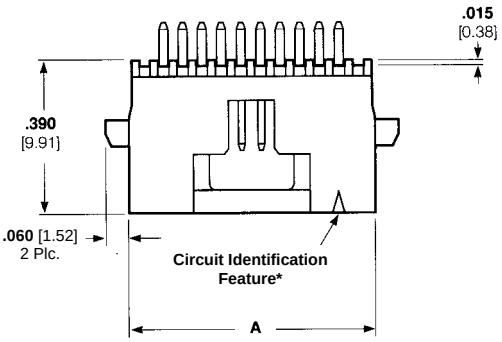

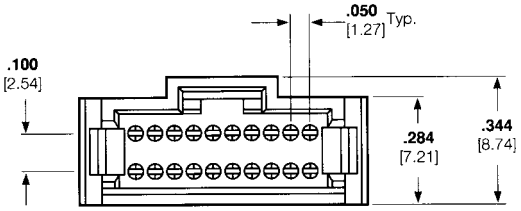

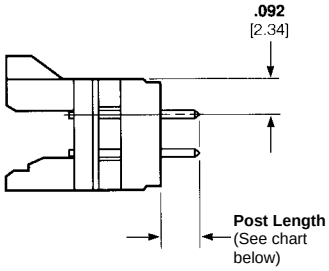

Material and Finish:

Housing—Black thermoplastic, 94V-0 rated

Contact—Copper alloy, plated .000030 [0.00076] gold in mating area, .000150 [0.00381] tin-lead on solder posts, with entire contact underplated .000050 [0.00127]nickel

Related Product Data:

Performance Specifications—page 2041

Mateable Connectors—pages 2038, 2040

Board-to-Board Spacing—page 2041

Technical Documents:

Product Specification
108-1093

Application Specification
114-25031

No. of Positions	Dimension A	Part Numbers	
		Post Length	
		.100 [2.54]	.145 [3.68]
10	**.380** 9.65	104068-2	—
12	**.430** 10.92	104068-8	—
14	**.480** 12.19	104068-9	—
16	**.530** 13.46	1-104068-0	—
20	**.630** 16.00	104068-1	104666-1
24	**.730** 18.54	1-104068-1	—
26	**.780** 19.81	1-104068-2	—
30	**.880** 22.35	104068-3	104666-2
34	**.980** 24.89	1-104068-3	—
40	**1.130** 28.70	104068-4	104666-3
44	**1.230** 31.24	1-104068-4	—
50	**1.380** 35.05	104068-5	104666-4
60	**1.630** 41.40	104068-6	104666-7
68	**1.830** 46.48	1-104068-8	104666-8
72	**1.930** 49.02	1-104068-5	—
80	**2.130** 54.10	1-104068-6	104666-5
100	**2.630** 66.80	1-104068-7	104666-6

*Circuit identification feature omitted on 10 and 12 position headers.

For complete product information, order Catalog 1307819

Products for Industrial & Commercial Applications
Dimensions are shown for reference purposes only.
Dimensions are in inches and millimeters unless otherwise specified. Values in brackets are metric equivalents.
Specifications subject to change.
Technical Support Center
1-800-522-6752
www.tycoelectronics.com

Thru-Hole Headers––Shrouded, .050 x .100 [1.27 x 2.54] Centerline, Board-to-Board

Double Row, Vertical With Card Slots

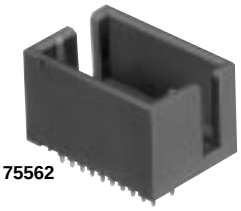

Photo 75562

Material and Finish:

Housing—Black thermoplastic, 94V-0 rated

Contacts—Copper alloy, plated .000030 [0.00076] gold in mating area, .000150 [0.00381] tin-lead on solder posts, with entire contact underplated .000050 [0.00127] nickel

Related Product Data:

Performance Specifications—page 2041

Mateable Connectors—page 2038

Technical Documents:

Product Specification
108-1093

Application Specification
114-25031

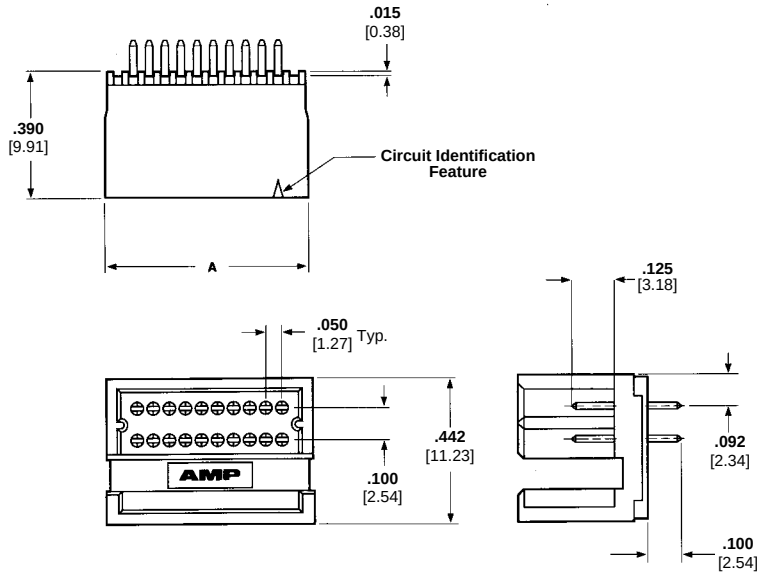

No. of Positions	Dimension A	Part Numbers
10	**.394** 10.01	104076-5
20	**.644** 16.36	104076-1
30	**.894** 22.71	104076-6
40	**1.144** 29.06	104076-3
50	**1.394** 35.41	104076-7
60	**1.644** 41.76	104076-2
100	**2.644** 67.16	104076-8

Thru-Hole Headers—Unshrouded, .050 x .100 [1.27 x 2.54]

Single Row, Right-Angle

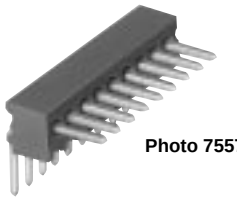

Photo 75575

Material and Finish:

Housing—Black thermoplastic, 94-V-0 rated

Contacts—Copper alloy, plated .000030 [0.00076] gold in mating area, .000150 [0.00381] tin-lead on solder posts, with entire contact underplated .000050 [0.00127] nickel

Related Product Data:

Performance Characteristics—page 2041

Mateable Connectors—page 2037

Technical Documents:

Product Specification
108-1093

Application Specification
114-25031

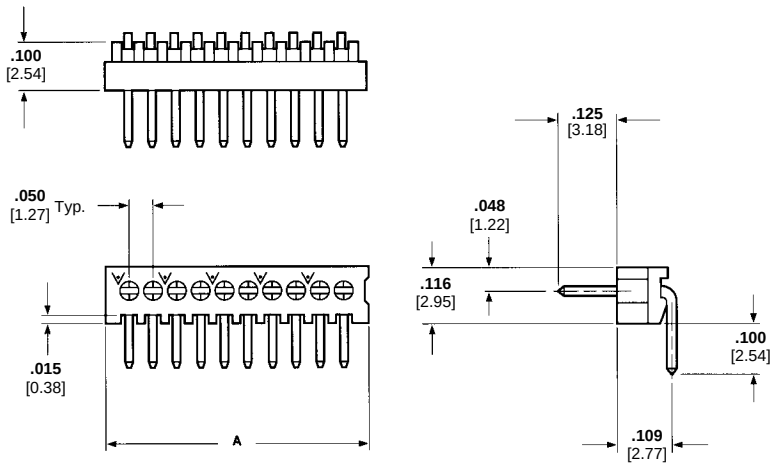

No. of Positions	Dimension A	Part Numbers
4	**.215** 5.46	104186-1
15	**.765** 19.43	104186-9
20	**1.015** 25.78	1-104186-1
25	**1.265** 32.13	1-104186-3
30	**1.515** 38.48	1-104186-5
31	**1.565** 39.75	2-104186-0
40	**2.015** 51.18	1-104186-7

For complete product information, order Catalog 1307819

Thru-Hole Headers––Unshrouded, .050 x .100 [1.27 x 2.54] Centerline, Board-to-Board

Single Row, Vertical

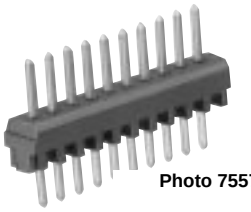

Photo 75574

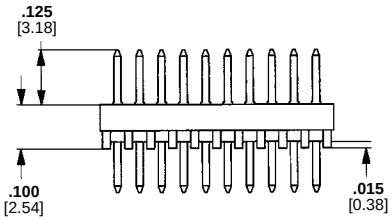

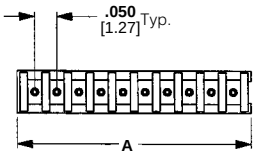

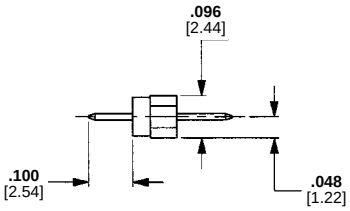

Material and Finish:

Housing—Black thermoplastic, 94V-0 rated

Contacts—Copper alloy, plated .000030 [0.00076] gold in mating area, .000150 [0.00381] tin-lead on solder posts, with entire contact underplated .000050 [0.00127] nickel

Related Product Data:

Performance Specifications—page 2041

Mateable Connectors—page 2037

Board-to-Board Spacing—page 2041

Technical Documents:

Product Specification
108-1093

Application Specification
114-25031

No. of Positions	Dimension A	Part Numbers
4	**.215** 5.46	104178-1
8	**.415** 10.54	104178-5
10	**.515** 13.08	104178-6
20	**1.015** 25.78	1-104178-1
25	**1.265** 32.13	1-104178-3

Double Row, Right-Angle

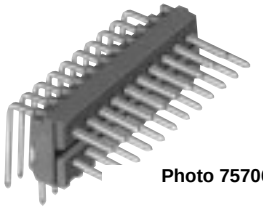

Photo 75706

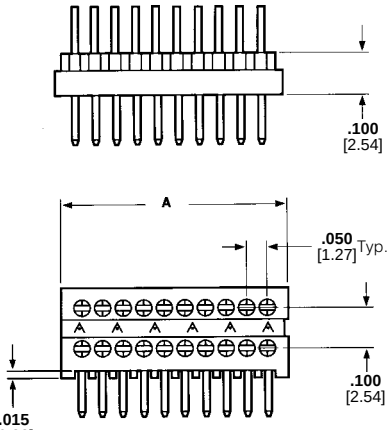

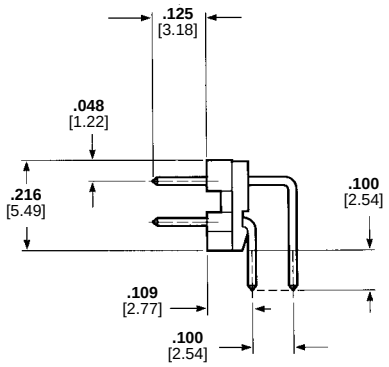

Material and Finish:

Housing—Black thermoplastic, 94V-0 rated

Contacts—Copper alloy, plated .000030 [0.00076] gold in mating area, .000150 [0.00381] tin-lead on solder posts, with entire contact underplated .000050 [0.00127] nickel

Related Product Data:

Performance Specifications—page 2041

Mateable Connectors—pages 2038, 2040

Technical Documents:

Product Specification
108-1093

Application Specification

No. of Positions	Dimension A	Part Numbers
10	**.265** 6.73	104118-3
20	**.515** 13.08	104118-7
30	**.765** 19.43	1-104118-0
40	**1.015** 25.78	1-104118-2
50	**1.265** 32.13	104118-1
60	**1.515** 38.48	1-104118-4
80	**2.015** 51.18	1-104118-6
100	**2.515** 63.88	1-104118-7

For complete product information, order Catalog 1307819

Products for Industrial & Commercial Applications
Dimensions are shown for reference purposes only.
Dimensions are in inches and millimeters unless otherwise specified. Values in brackets are metric equivalents.
Specifications subject to change.
Technical Support Center
1-800-522-6752
www.tycoelectronics.com

Thru-Hole Headers––Unshrouded, .050 x .100 [1.27 x 2.54] Centerline, Board-to-Board

Double Row, Vertical

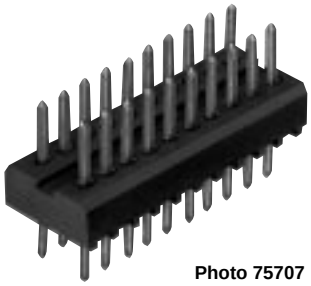

Photo 75707

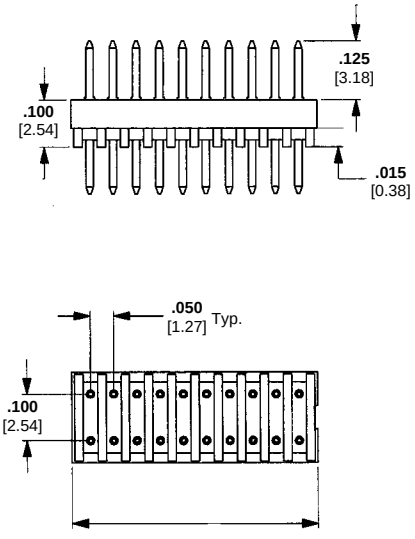

Material and Finish:

Housing—Black thermoplastic, 94V-0 rated

Contacts—Copper alloy, plated .000030 [0.00076] gold in mating area, .000150 [0.00381] tin-lead on solder posts, with entire contact underplated .000050 [0.00127] nickel

Related Product Data:

Performance Characteristics—page 2041

Mateable Connectors—pages 2038, 2040

Board-to-Board Spacing—page 2041

Technical Documents:

Product Specification
108-1093

Application Specification
114-25031

No. of Positions	Dimension A	Part Numbers
20	**.515** 13.08	103916-2
30	**.765** 19.43	103916-9
40	**1.015** 25.78	1-103916-1
50	**1.265** 32.13	1-103916-3
60	**1.515** 38.48	1-103916-4
80	**2.015** 51.18	1-103916-6
100	**2.515** 63.88	1-103916-7

Thru-Hole Receptacles, .050 x .100 [1.27 x 2.54] Centerline, Board-to-Board

Product Facts

- High density; contacts spaced on .050 x .100 [1.27 x 2.54] centers
- Right-angle and vertical styles
- Single row; select sizes 5 thru 50 positions
- Double row; select sizes 10 thru 100 positions
- Contacts are selectively plated with gold
- Stand-offs for removal of solder flux

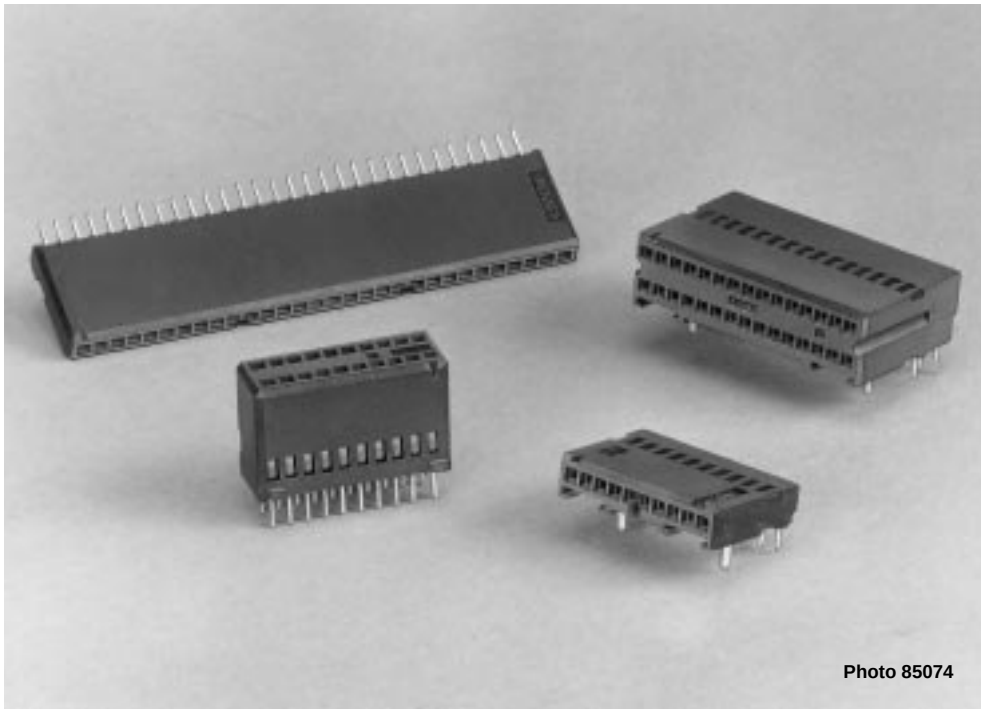

Photo 85074

The AMPMODU System 50 thru-hole receptacles offer a wide variety of high density board-to-board connectors. The .050 [1.27] spacing between each contact provides an extremely dense interconnect package and results in a more efficient use of the printed circuit board space.

AMPMODU System 50 thru-hole receptacles are available in right-angle and vertical configurations and are composed of single and double row versions. The single row versions are available in select sizes of 5 thru 50 positions and double row in positions from 10 thru 100.

Receptacle contacts and mating .015 [0.38] square posts are formed from high conductivity copper alloy and are selectively plated with gold for higher performance and reliability. The receptacle housings are made of black thermoplastic, with a 94V-0 rating to withstand high temperatures of reflow soldering and incorporate stand-offs for free drainage of flux cleaning solutions.

For complete product information, order Catalog 1307819

Products for Industrial & Commercial Applications
Dimensions are shown for reference purposes only.
Dimensions are in inches and millimeters unless otherwise specified. Values in brackets are metric equivalents.
Specifications subject to change.
Technical Support Center
1-800-522-6752
www.tycoelectronics.com

Thru-Hole Receptacles, .050 x .100 [1.27 x 2.54] Centerline, Board-to-Board

Single Row, Right-Angle With Solder Clips

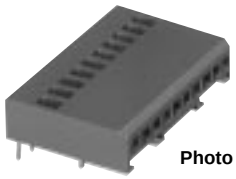

Photo 75570

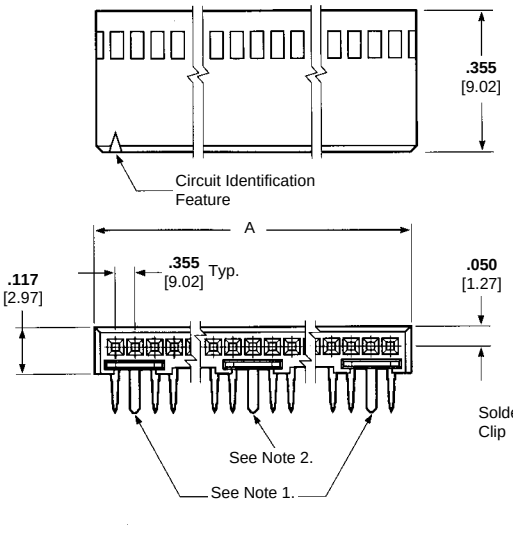

Material and Finish:

Housing—Black thermoplastic 94V-0 rated

Contacts—Copper alloy, plated .000030 [0.00076] gold in mating area, .000150 [0.00381] tin-lead on solder posts, with entire contact underplated .000050 [0.00127] nickel

Related Product Data:

Performance Specifications—page 2041

Mateable Connectors—page 2033, 2034

Technical Documents:

Product Specification 108-1093

Application Specification 114-25031

No. of Positions	Dimension A	Part Numbers
10	**.544** 13.82	104196-2
15	**.794** 20.17	104196-4
20	**1.044** 26.52	104196-5

Notes: [1] Solder Clips located as shown for 10 through 25 position receptacles.
[2] Solder Clips located as shown for 5 and 25 position receptacles.

Single Row, Vertical

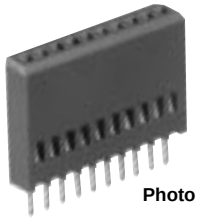

Photo 75576

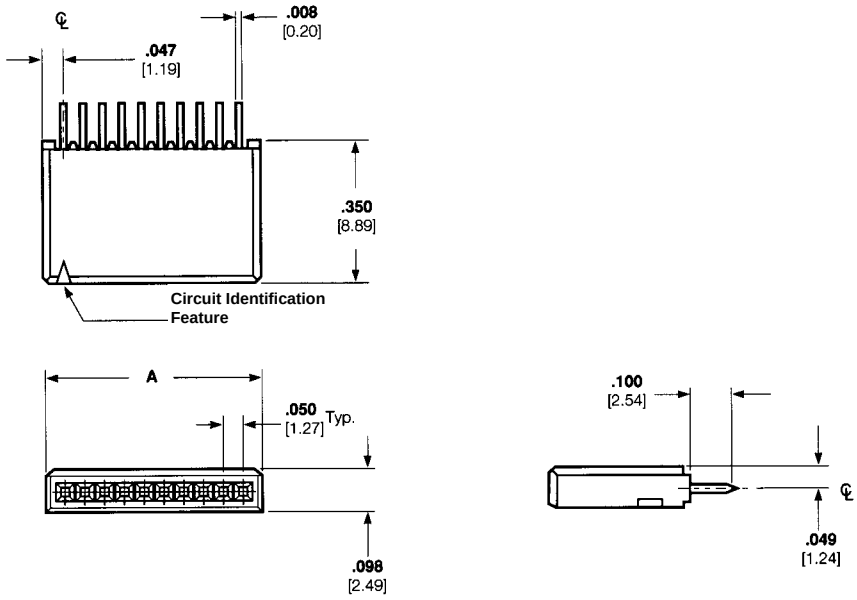

Material and Finish:

Housing—Black thermoplastic, 94V-0 rated

Contacts—Copper alloy, plated .000030 [0.00076] gold in mating area, .000150 [0.00381] tin-lead on solder posts, with entire contact underplated .000050 [0.00127] nickel

Related Product Data:

Performance Specifications—page 2041

Mateable Connectors—pages 2029, 2030, 2033, 2034

Board-to-Board Spacing—page 2041

Technical Documents:

Product Specification 108-1093

Application Specification 114-25031

No. of Positions	Dimension A	Part Numbers
10	**.544** 13.82	104192-2
15	**.794** 20.17	104192-4
30	**1.544** 39.22	104192-7

For complete product information, order Catalog 1307819

Products for Industrial & Commercial Applications
Dimensions are shown for reference purposes only.
Dimensions are in inches and millimeters unless otherwise specified. Values in brackets are metric equivalents.
Specifications subject to change.
Technical Support Center 1-800-522-6752 www.tycoelectronics.com

Thru-Hole Receptacles, .050 x .100 [1.27 x 2.54] Centerline, Board-to-Board

Double Row, Right-Angle

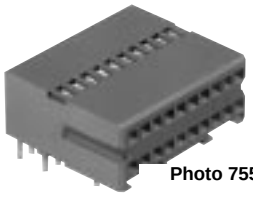

Photo 75571

Material and Finish:

Housing—Black thermoplastic, 94V-0 rated

Contacts—Copper alloy, plated .000030 [0.00076] gold in mating area, .000150 [0.00381] tin-lead on solder posts, with entire contact underplated .000050 [0.00127] nickel

Related Product Data:

Performance Characteristics—page 2041

Mateable Connectors—page 2033-2035

Technical Documents:

Product Specification
108-1093

Application Specification
114-25031

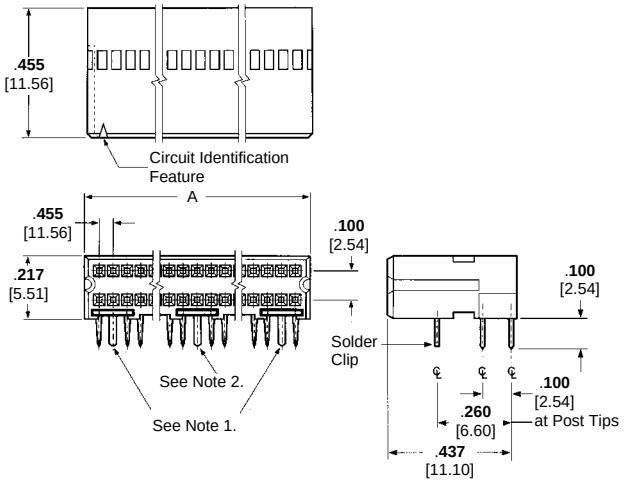

No. of Positions	Dimension A	Part Numbers
10	**.294** 7.47	103911-1
20	**.544** 13.82	103911-2
30	**.794** 20.17	103911-7
40	**1.044** 26.52	103911-5
50	**1.294** 32.87	103911-4
60	**1.544** 39.22	103911-3
80	**2.044** 51.92	103911-6
100	**2.544** 64.62	103911-8

Notes: [1] Solder Clips located as shown for 20 through 100 position receptacles.
[2] Solder Clips located as shown for 10, 60, 80 and 100 position receptacles.

Double Row, Vertical

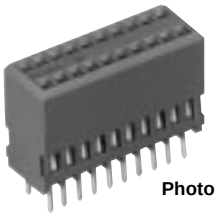

Photo 75558

Material and Finish:

Housing—Black thermoplastic, 94V-0 rated

Contacts—Copper alloy, plated .000030 [0.00076] gold in mating area, .000150 [0.00381] tin-lead on solder posts, with entire contact underplated .000050 [0.00127] nickel

Related Product Data:

Performance Specifications—page 2041

Mateable Connectors—pages 2031, 2032, 2034, 2035 and 2040

Board-to-Board Spacing—page 2041

Technical Documents:

Product Specification
108-1093

Application Specification
114-25031

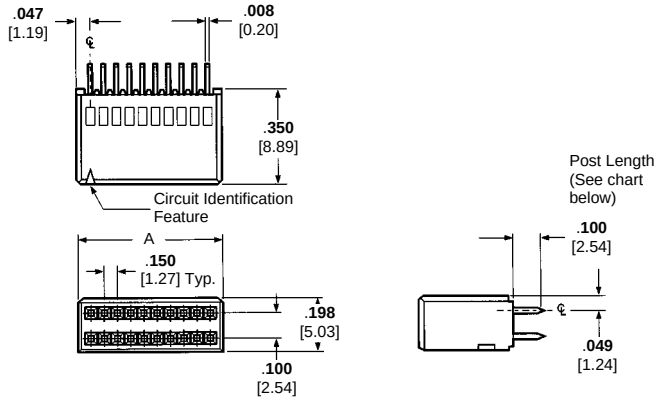

No. of Positions	Dimension A	Part Numbers Post Length	
		.100 [2.54]	.145 [3.68]
10	**.294** 7.47	104078-3	—
20	**.544** 13.82	104078-1	—
24	**.644** 16.36	104078-9	—
30	**.794** 20.17	104078-4	—
34	**.894** 22.71	1-104078-0	—
40	**1.044** 26.52	104078-2	—
50	**1.294** 32.87	104078-5	104744-7
60	**1.544** 39.22	104078-6	—
68	**1.744** 44.30	1-104078-3	—
80	**2.044** 51.92	104078-7	104744-4
100	**2.544** 64.62	104078-8	104744-5

For complete product information, order Catalog 1307819

Products for Industrial & Commercial Applications
Dimensions are shown for reference purposes only.
Dimensions are in inches and millimeters unless otherwise specified. Values in brackets are metric equivalents.
Specifications subject to change.
Technical Support Center
1-800-522-6752
www.tycoelectronics.com

Surface-Mount Connectors, .050 x .100 [1.27 x 2.54] Centerline, Board-to-Board

Product Facts

- **Surface-mount option for parallel board-to-board applications; completely intermateable with AMPMODU System 50 through-hole board-to-board and cable-to-board systems**
- **Double row, vertical, shrouded header and receptacle assemblies**
- **Available in select sizes from 10 through 100 positions**
- **High Density; contacts spaced on .050 x .100 [1.27 x 2.54] centers; compact footprint**
- **Compatible with standard surface-mount processes**
- **Stand-offs for free drainage of flux cleaning solutions; visible solder joints for easy inspection**
- **Simple, low insertion-force holddown for process retention and long-term strain relief for solder joints**
- **Available in tape and reel packaging (with vacuum covers) for automatic placement.**

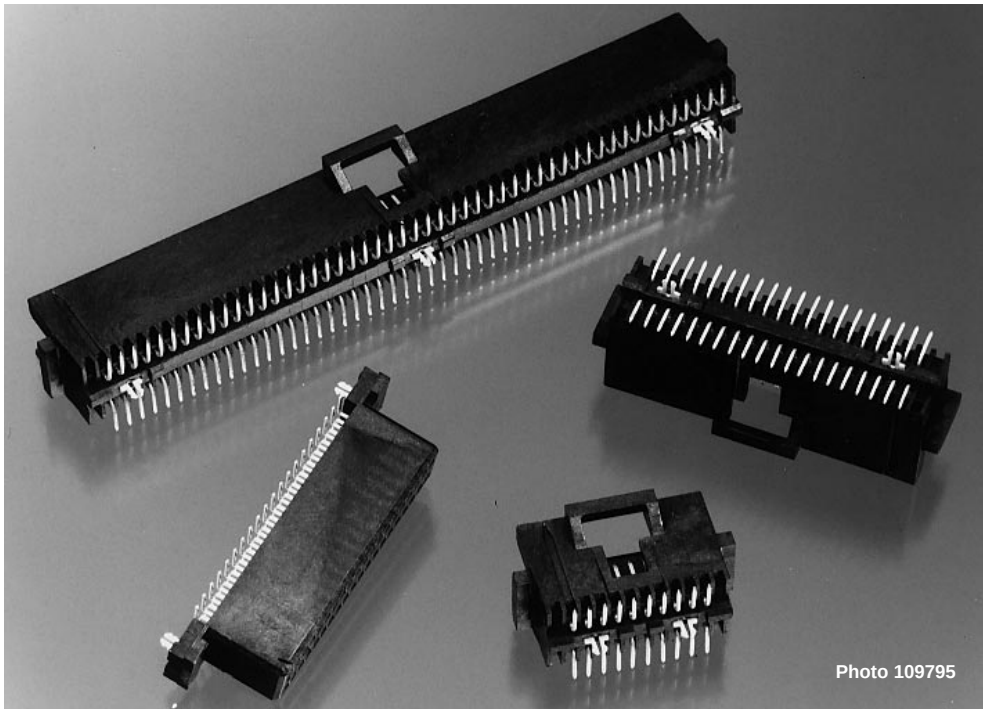

The high-density surface-mount connector is another mounting option in the AMPMODU System 50 connector family.

This surface-mount system is fully intermateable with the AMPMODU System 50 thru-hole and cable-to-board connectors.

Additionally, the design of the mating interface has not been changed, maintaining the same high reliability as the thru-hole product.

The surface-mount system includes double row, vertical, shrouded header and receptacle assemblies in select sizes from 10 through 100 positions. It meets the tight dimensional requirements of surface-mount technology. The simple, low insertion-force holddown provides both processing retention and long-term strain relief for the solder joints in the headers and receptacles.

For complete product information, order Catalog 1307819

Products for Industrial & Commercial Applications
Dimensions are shown for reference purposes only.
Dimensions are in inches and millimeters unless otherwise specified. Values in brackets are metric equivalents.
Specifications subject to change.
Technical Support Center
1-800-522-6752
www.tycoelectronics.com

Surface-Mount Headers, .050 x .100 [1.27 x 2.54] Centerline, Board-to-Board

Double Row, Vertical

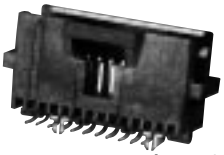

Photo 109793

Material and Finish:

Housing—Glass-filled, black thermoplastic, 94V-0 rated

Contacts—Phosphor bronze, plated .000030 [0.00076] gold in mating area, .000150 [0.00381] tin-lead on solder tail, with entire contact underplated .000050 [0.00127] nickel

Holddown—Copper alloy, plated .000150 tin-lead over .000050 [0.00127] nickel

Related Product Data:

Performance Characteristics—page 2041

Mateable Connectors—pages 2038 and Below

Board-to-Board Spacing—page 2041

Technical Documents:

Product Specification
108-1093

Application Specification
114-25035

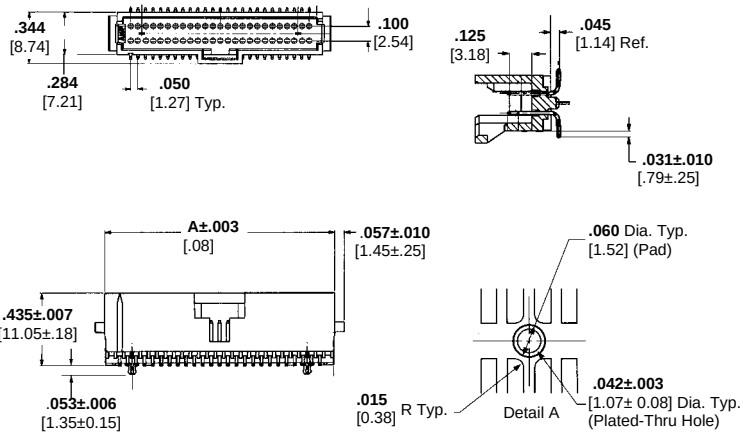

No. of Positions	Dimension A	Part Numbers Pkg in Tube	Part Numbers Pkg in Tape & Reel*
10	**.380** 9.65	104549-1	147377-1
12	**.430** 10.92	1-104549-1	—
20	**.630** 16.00	104549-2	147377-2
24	**.730** 18.54	104549-3	147377-9
30	**.880** 22.35	104549-5	147377-3
40	**1.130** 28.70	104549-6	147377-4
50	**1.380** 35.05	104549-7	147377-5
60	**1.630** 41.40	104549-8	147377-6
80	**2.130** 54.10	104549-9	147377-7
100	**2.630** 66.80	1-104549-0	147377-8

*Parts packaged in tape and reel are without hold downs and include a vacuum pick and place cover

Surface-Mount Receptacles

Double Row, Vertical



Photo 109794

Material and Finish:

Housing—Glass-filled, black thermpolastic, 94V-0 rated

Contacts—Phosphor bronze, plated .000030 [0.00076] gold in mating area, .000150 [0.00381] tin-lead on solder tail, with entire contact underplated .000050 [0.00127] nickel

Holddown—Copper alloy, plated .000150 tin-lead over .000050 [0.00127] nickel

Related Product Data:

Performance Characteristics—page 2041

Mateable Connectors—pages 2031, 2032, 2034, 2035 and Above

Board-to-Board Spacing—page 2041

Technical Documents:

Product Specification
108-1093

Application Specification
114-25035

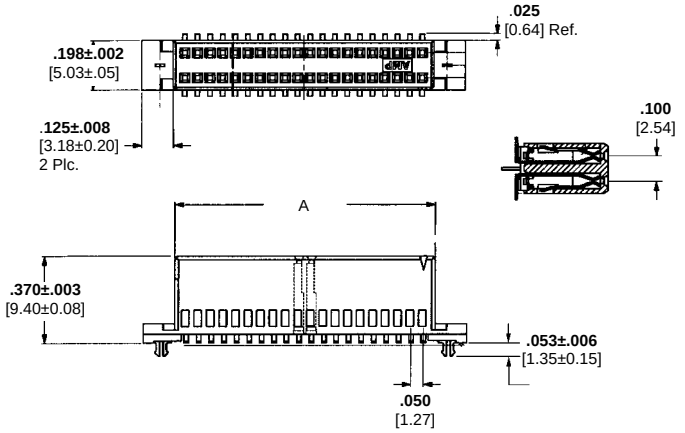

No. of Positions	Dimension A	Part Numbers Pkg in Tube	Part Numbers Pkg in Tape & Reel*
10	**.294** 7.47	104550-1	147378-1
20	**.544** 13.82	104550-2	147378-2
24	**.644** 16.36	104550-3	147378-9
30	**.794** 20.17	104550-4	147378-3
40	**1.044** 26.52	104550-5	147378-4
50	**1.294** 32.87	104550-6	147378-5
60	**1.544** 39.22	104550-7	147378-6
80	**2.044** 51.92	104550-8	147378-7
100	**2.544** 64.62	104550-9	147378-8

*Parts packaged in tape and reel are without hold downs and include a vacuum pick and place cover

For complete product information, order Catalog 1307819

Products for Industrial & Commercial Applications
Dimensions are shown for reference purposes only.
Dimensions are in inches and millimeters unless otherwise specified. Values in brackets are metric equivalents.
Specifications subject to change.
Technical Support Center
1-800-522-6752
www.tycoelectronics.com

Performance Specifications

Board-to-Board Spacing for Thru-Hole and Surface-Mount Connector Combinations

Thru-Hole Receptacle–Thru-Hole Header

(Single and Double Row, Shrouded and Unshrouded)

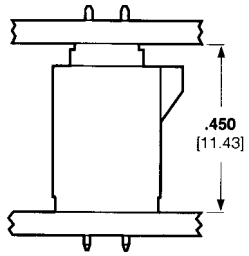

Thru-Hole Receptacle–Surface-Mount Header

(Double Row, Shrouded)

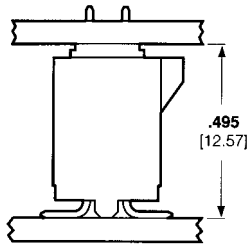

Surface-Mount Receptacle–Thru-Hole Header

(Double Row, Shrouded and Unshrouded)

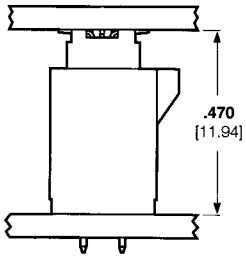

Surface-Mount Receptacle–Surface-Mount Header

(Double Row, Shrouded)

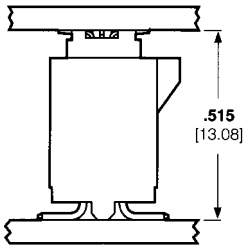

Need more information?

Call the Technical Support Center: **1-800-522-6752.** The Technical Support Center is staffed with specialists well versed in all AMP products. The Center can provide you with:

- Technical Support
- Catalogs
- Technical Documents
- Product Samples
- AMP Authorized Distributor Locations

Performance Specifications

Description	Board-to-Board, Thru-Hole Headers and Receptacles	Board-to-Board, Surface-Mount, Headers and Receptacles	Cable-to-Board, .050 [1.27] Centerline FFC Cable Receptacles	Cable-to-Board, .025 [0.64] Centerline Ribbon Cable Receptacles
Size Range-Single Row Double Row	4 thru 50 10 thru 100	— 10 thru 100	4 thru 50 8 thru 100	— 10 thru 100
Current Rating (per contact)	1.0 amperes	1.0 amperes	1.5 amperes	0.5 amperes
Dielectric Withstanding Voltage	500 VAC	500 VAC	300 VAC	200 VAC
Insulation Resistance	5,000 Megohms	5,000 Megohms	5,000 Megohms	5,000 Megohms
Durability (tested to)	200 Cycles	200 Cycles	200 Cycles	150 Cycles
Mating Force (per contact)	5 oz. [1.38 N] Max.	5 oz. [1.38 N] Max.	8 oz. [2.22 N] Max.	4 oz. [1.11 N] Max.
Unmating Force (per contact)	0.8 oz. [0.22 N] Min.	0.8 oz. [0.22 N] Min.	1.0 oz. [0.27 N] Min.	0.5 oz. [0.13 N] Min.
Operating Temperature	-65°C to +105°C	-65°C to +105°C	-55°C to +105°C	-65°C to +105°C

For complete product information, order Catalog 1307819

AMPMODU .025 [0.64] Square Interconnection System

Introduction

The AMPMODU interconnection system provides interconnections with a unique modular concept, utilizing precision formed receptacle contacts and mating posts.

Mating of the post and receptacle contacts of this system is very tolerant. This is made possible by a post with a burr-free lead-in and a receptacle contact featuring double cantilever beams and anti-overstress stops.

AMPMODU receptacle contacts and posts categorically fall into three general classifications of products, which include: board mounted posts and receptacle assemblies, post headers and wire-applied contact housings for crimp snap-in pin and receptacle contacts.

Board mounted receptacle assemblies are available in various geometries, offering packaging interconnections that include perpendicular, parallel and stacking capabilities.

Crimp snap-in pins for 26-22 AWG [0.12-0.4 mm^2] wire and crimp snap-in receptacles for 32-20 AWG [0.03-0.6 mm^2] wire provide excellent discrete wire terminations. Housings for these contacts provide ease of handling terminations in high density applications.

Machine applied terminations, through matched application equipment, are geared for virtually any production volume requirement, for low applied cost.

AMPMODU mating posts are supplied typically as headers. They are available in various populations to meet the interconnection and packaging requirements of your system. However, in instances where packaging configurations do not lend themselves to the economies of headers, AMP can provide application equipment for the discrete location of individual posts.

Looking at the electronic industry's standard "levels of packaging," the AMPMODU .025 [0.64] square interconnection system is primarily used in levels three and four.

In level three it is used as a connection between two or more printed circuits. A mother/daughter board connection is typical. In level four it is used as a connection between two subassemblies, such as a power supply and an associated subassembly.

It is also important to note this product can serve as an interconnection in more than one level, depending on the application.

The .025 [0.64] square interconnection system offers the most complete line of post/receptacle packaging products available today. This system, rated at 3 amperes per contact, has been used by almost every industry and marketplace over the last decade and is one of the oldest, most versatile and reliable interconnection systems employing .025 [0.64] square packaging technology.

Terms Explained

Receptacle Contacts

The AMPMODU receptacle cross-section is primarily rectangular, with rounded corners. Two integral cantilever beams contact the mating square or round male posts. Deflection of these spring members is limited by anti-overstress stops, and excessive permanent deformation is prevented. This feature allows a wide range for tolerance of misalignment of mating contacts.

The configuration of the receptacle completely encloses the spring members to help prevent damage during handling and assembly and makes the system compatible with automatic application techniques.

Note: Application of a contact lubricant is part of the manufacturing process of all AMPMODU tin-plated crimp products. However, it is not part of the manufacturing process of products that customers will solder, then clean. For these products, AMP recommends that customers use contact lubricant. See the Tyco Electronics web page for further information.

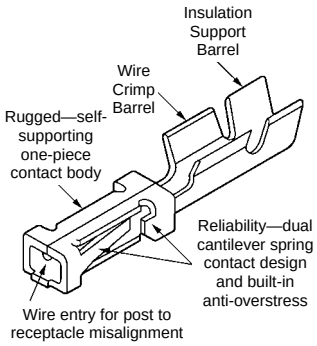

Offers standard, intermediate and high pressure contact forces

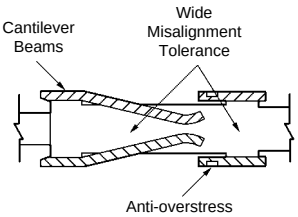

Receptacle-Closed Entry Housing Design

The closed entry housing style eliminates the likelihood of a mating post stubbing on the edges of the receptacle contact.

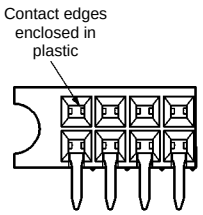

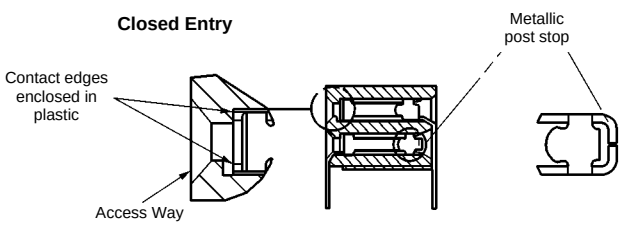

For complete product information, order Catalog 1307819

Wire-to-Board, .100 [2.54] Centerline Products

Wire Sizes

Wire Size AWG	Wire Size [mm²]	Product Family
20	0.5-0.6	Locking Clip, Mod. IV, IV.v, V, MT, Short Point
22-30	0.3-0.05	Locking Clip, Mod. IV, IV.v, V, MTE, MT, Short Point
32	0.03	Mod. IV, IV.v, V, Short Point

Contact Platings

Platings	Product Family
.000015 0.00038 Gold	Mod. IV, IV.v, V, MTE, MT, Short Point
.000030 0.00076 Gold	Locking Clip, Mod. IV, IV.v, V, MTE, MT, Short Point
.000050 0.00127 Gold	Locking Clip, Mod. IV, IV.v, V, MT
Tin	Locking Clip, Mod. IV, IV.v, V, MTE, MT, Short Point

Mating Post Lengths

Post Lengths	Product Family
.210-.283 5.33-7.19	Mod. IV (**.600** 15.24 Profile Height)
.205-.283 5.21-7.19	Mod. IV.v (**.600** 15.24 Profile Height)
.185-.283 4.70-7.19	Mod. V (**.600** 15.24 Profile Height)
.256-.323 6.50-8.20	Mod. IV (**.645** 16.38 Profile Height)
.251-.323 6.38-8.20	Mod. IV.v (**.645** 16.38 Profile Height)
.231-.323 5.87-8.20	Mod. V (**.645** 16.38 Profile Height)
.146-.283 3.71-7.19	Tandem Spring (**.600** 15.24 Profile Height
.273-.350 6.93-8.89	Tandem Spring (**.645** 16.38 Profile Height
.222-.273 5.64-6.93	MT Assembly with Standard Pressure Contacts
.200-.273 5.08-6.93	MT Assembly with High Pressure Contacts
.200-.250 5.08-6.35	MTE Assembly
.169-.259 4.29-6.58	Short Point Connector Assembly
.273-.350 6.93-8.89	Locking Clip (Connector Assembly)
.200-.277 5.08-7.04	Locking Clip (Single Contact)

Application Tooling

Application Tooling Description	Product Family					
	Mod. IV, IV.v, V	MT	Locking Clip	MTE	Short Point	Level V
Manual Hand Tools (Wire Crimp)	•		•	•	•	
Manual Hand Tools (IDC)		•		•		•
AMP-O-MATIC Stripper/Crimper Machines with Applicator	•		•		•	
CHAMPOMATOR Model 2.5 Machine		•				•
CHAMPOMATOR Model 3A Machine		•				
AMP-O-LECTRIC Machines with Applicator	•		•		•	
Pneumatic Hand Tools	•	•	•	•	•	•
IDC Electric Power Unit				•		
Tube-Fed Ribbon Cable Machine				•		
AMPOMATOR CLS Machines	•		•		•	
Discrete Wire Machine		•				•
Manual Arbor Tool		•				•
Pneumatic Arbor Tool		•				•

For complete product information, order Catalog 1307819

Products for Industrial & Commercial Applications
Dimensions are shown for reference purposes only.
Dimensions are in inches and millimeters unless otherwise specified. Values in brackets are metric equivalents.
Specifications subject to change.
Technical Support Center 1-800-522-6752 www.tycoelectronics.com

Board-to-Board Solutions Guide, .100 [2.54] Centerline Products

Problem or Concern	AMP Solution	Single-Row Vertical Headers and Receptacles (Page Ref.)	Single-Row Right-Angle Headers, Horizontal Receptacles (Page Ref.)	Double-Row Vertical Headers and Receptacles (Page Ref.)	Double-Row Right-Angle Headers, Horizontal Receptacles (Page Ref.)
Headers Float Off Board Soldering Operation	**HEADERS** Retention Feature:				
	Unshrouded	2065	2066	2110	2061, 2112
	Shrouded	—	—	2067, 2111	2068, 2112
Header Contacts Damaged During Manufacturing Operation or In-Field Use	Shrouded **HEADERS:**				
	Standard Profile	2071	2055	2073, 2075	2076, 2079
Board/Backplane Requires High Temperature Surface-Mount Compatibility	Press-Fit ACTION PIN POST **HEADERS** After Reflow:				
	Unshrouded	2082	—	2083	—
	Shrouded	—	—	2084, 2085, 2111	—
	Surface-Mount Compatible Through-Hole:				
	HEADERS:				
	Unshrouded	2065*	2065*	2067*	2068*
	Shrouded (Low Profile)	—	—	—	—
	RECEPTACLES	—	—	2109*	2107*, 2108*
	Surface-Mount:				
	HEADERS	2069*	—	2069*	—
	RECEPTACLES	—	—	2102*, 2103*	—
Application Requires Board Guidance, Polarization and/or Blind-Mate Capability	Two-Piece Family: w/Guide Posts:				
	HEADERS	—	—	2110, 2111	2112
	RECEPTACLES	—	—	2109*	2107*, 2108*
Reduction in Parallel Board-to-Board Stack Height Necessary (Refer to Parallel Stack Guide on Page 2105.)	Mod IV Low Profile **RECEPTACLES:**				
	TOP ENTRY:				
	Through-Hole	2095	—	2096	—
	Surface-Mount	—	—	2103	—
	BOTTOM ENTRY:				
	Through-Hole	2094	—	2097	—
	Surface-Mount	—	—	2102*	—
Soldering Problems with Through-Hole Bottom Entry Receptacles (Must Mask Post Holes in Board During Soldering Operation)	**RECEPTACLES:** Bottom Entry Outrigger (Separate Holes for Receptacle Leads and Mating Leads)	—	—	2091	—
Posts Stub When Mated to Receptacle	Closed Entry Receptacles (Refer to Illustration on Page 2101.)				
	Through-Hole	2092, 2095	2089*	2093, 2096, 2109*	2090*, 2107*, 2108*
	Surface-Mount	—	—	2101*	—
Application Requires Connectors to be End-to-End Stackable on .100 [2.54] Grid	End-to-End Stackable:				
	HEADERS (Unshrouded):				
	Through-Hole	2048, 2054	2049, 2054, 2055	2050, 2056	2051, 2057, 2060
	Through-Hole*	2065*	2066*	2067*	2068*
	Surface-Mount	2069*	—	2069*	—
	RECEPTACLES:				
	Through-Hole	2092, 2094, 2095	2089*	2093, 2096, 2097*	2090

***High temperature compatible version, refer to page ref. listed.**

Wire-to-Board Solutions Guide, .100 [2.54] Centerline Products

Customer Requirement	AMP Solution	Catalog Page(s)
Application Requires Guidance, Polarization	Mod IV Polarized Housing	2125
	MTE Latched Receptacle and Header	2132, 2140-2146
	MT with Polarizing Covers	2153-2155
Wire-to-Wire Application	Mod IV Receptacle Contacts and Pins	2117, 2118
Wire-to-Wire Application (Latched)	MTE Latched Receptacle and Shrouded Pin Assembly	2132
Printed Circuit Board Polarization	MTE Header with PC Board Orientation Peg	2143, 2144
Board Requires Surface Mount Capability	MTE Surface Mount Headers	2144, 2146
	MTE High Temperature Compatible Headers	
Need to mate to AMP-LATCH Eject Headers	Mod IV Ejection Housing	2125
Need to Minimize Strain to Cable	MT with Eject Covers	2153-2155
	Mod IV Housing with Strain Relief	2124
Header Secured to Board During/Prior to Soldering	MTE Headers with Post Retention or Holddowns	2140-2146
Mate to Unshrouded Header with Retention Requirements	MTE with High Pressure Contacts and Mod V Contacts	2119-2135
Multiple Cables to be Common to One Header	MTE Coupling Shroud, Double- or Single-Row	2138, 2139
Right-Angle Cable Dress	MT with Hermaphroditic Covers	2153, 2154, 2156
Application Requires Crimp Contacts and MTE Housings	Short Point Contacts and Tandem Spring Contacts	2127
Housings and End-to-End and Side-to-Side Stackable	Short Point Double-Row Housing, MTE Plain Housing	2128, 2131
Connector Must Mate to Post Lengths of .169 [4.29] Min.	Short Point Contacts	2127

For complete product information, order Catalog 1307819

Products for Industrial & Commercial Applications
Dimensions are shown for reference purposes only.
Dimensions are in inches and millimeters unless otherwise specified. Values in brackets are metric equivalents.
Specifications subject to change.
Technical Support Center 1-800-522-6752 www.tycoelectronics.com

Mating Post Selection Guide

The following selection guide is provided to help in choosing a mating product after a receptacle, header or post has been selected.

In some instances references are given on the catalog page to specific mating connectors. In other instances the reader is referred here to the selection guide for mating product recommendations.

If your application requirement is not answered here, consult AMP for further recommendations.

Posts Without Shoulders

For drawn wire products (ie, AMPMODU Breakaway and Low Profile Headers) and for products having the shoulder of the post below the housing or pc board surface (ie, AMPMODU MTE and Single Row Shrouded Headers) the effective mating length starts at the housing or pc board surface.

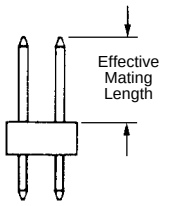

Posts With Shoulders

For product having the shoulder of the post extending above the housing or pc board surface) ie, Standard AMPMODU Shrouded and Unshrouded Headers) the effective mating length starts at the top of the shoulder.

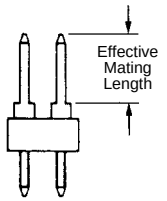

Receptacle Type	Recommended Effective Mating Posts Lengths	
	Minimum	Maximum
AMPMODU Mod II Horizontal Board Mount Receptacle, Single and Double Row, Short Point-of-Contact—pages 2089, 2090	**.230** 5.84	**.280** 7.11
AMPMODU Mod II Vertical Board Mount Receptacle, Single Row, Standard Profile, Top Entry—page 2092	**.207** 5.26	**.330** 8.38
AMPMODU Mod II Vertical Board Mount Receptacle, Standard Profile, Double Row, Top Entry, 100 x .100 mt.—page 2093	**.207** 5.26	**.330** 8.38
AMPMODU Mod IV Vertical Board Mount Receptacle, Low Profile, Single Row, Top Entry, Single Tine—page 2095	**.203** 5.16	**.255** 6.48
AMPMODU Mod IV Vertical Board Mount Receptacle, Low Profile, Single Row, Bottom Entry—page 2094	**.280** 7.11	*
AMPMODU Mod IV Vertical Board Mount Receptacle, Low Profile, Double Row, Top Entry—page 2096	**.203** 5.16	**.255** 6.48
AMPMODU Surface-Mount Receptacle, Vertical Board Mount, Double Row, Bottom Entry—pages 2102, 2103	**.280** 7.11	*
AMPMODU Mod IV Vertical Board Mount Receptacle, Low Profile, Double Row, Bottom Entry—page 2097	**.280** 7.11	*
AMPMODU Surface-Mount Receptacle, Vertical Board Mount, Double Row, Top Entry—page 2104	**.203** 5.16	**.255** 6.48
AMPMODU .600 [15.24] Mod IV Housing with Standard Pressure Contacts—pages 2117-2125	**.210** 5.33	**.283** 7.19
AMPMODU .600 [15.24] Mod IV Housing with Intermediate Pressure Contacts—pages 2117-2125	**.205** 5.21	**.283** 7.19
AMPMODU .600 [15.24] Mod IV Housing with High Pressure Contacts—pages 2117-2125	**.185** 4.70	**.283** 7.19

Receptacle Type		Recommended Effective Mating Posts Lengths	
		Minimum	Maximum
AMPMODU .600 [15.24] Mod IV Housing with Tandem Spring Contacts—pages 2120-2125		**.146** 3.71	**.283** 7.19
Short Point Housing with Contacts—page 2127		**.169** 4.29	**.259** 6.58
AMPMODU MTE Unloaded Housing with Short Point Contacts—pages 2127, 2131-2134		**.169** 4.29	**.259** 6.58
AMPMODU MTE IDC Assemblies		**.200** 5.08	**.250** 6.35
AMPMODU MT IDC Assembly with Standard Pressure Contacts—page 2153		**.222** 5.64	**.273** 6.93
AMPMODU MT IDC Assembly with High Pressure Contacts—page 2154		**.200** 5.08	**.273** 6.93
Flexible Flat Conductor Cable Receptacle with Round Wire Crimp High Pressure Contact—Catalog 82007	Single Row	**.267** 6.78	**.323** 8.20
	Double Row	**.282** 7.16	**.323** 8.20
Flexible Flat Conductor Cable Receptacle with Multiple Wire Crimp High Pressure Contact—Catalog 82007	Single Row	**.210** 5.33	**.323** 8.20
	Double Row	**.225** 5.72	**.323** 8.20
Flexible Flat Conductor Cable Receptacle with Round Wire Crimp Standard Pressure Contact—Catalog 82007	Single Row	**.267** 6.78	**.323** 8.20
	Double Row	**.282** 7.16	**.323** 8.20
Flexible Flat Conductor Cable Receptacle with Multiple Crimp Standard Pressure Contact—Catalog 82007	Single Row	**.220** 5.59	**.323** 8.20
	Double Row	**.235** 5.97	**.323** 8.20
AMP-LATCH Novo Receptacle—Catalog 82012		**.190** 4.83	**.245** 6.22

*Maximum post length is determined by customer's application; (i.e., available space beyond rear of horizontal receptacle assembly, or above bottom entry vertical receptacle assembly).

For complete product information, order Catalog 1307819

Products for Industrial & Commercial Applications
Dimensions are shown for reference purposes only.
Dimensions are in inches and millimeters unless otherwise specified. Values in brackets are metric equivalents.
Specifications subject to change.
Technical Support Center
1-800-522-6752
www.tycoelectronics.com

Parallel Stacking Guide for Board-to-Board Applications

See Figure Below	Dimension Between PC Boards		Product Family Headers (See Note 1.)	Single-Row (Page Ref.)	Double-Row (Page Ref.)	Product Family Receptacles	Single-Row (Page Ref.)	Double-Row (Page Ref.)
	.020	0.50	Bandolier Posts	NA	NA	Mini Spring Sockets	Catalog 82172	Catalog 82172
	.060	1.52	Bandolier Posts	NA	NA	Bottom Entry, Mod IV	2094	2097
1	**.090**	2.29	Breakaway** (Unshrouded)	2054, 2065**	2056, 2067**	Bottom Entry, Mod IV	2094	2097
	.153	3.89	Surface Mount** Breakaway (Unshrouded)	NA	2069	Surface Mount**, Mod IV, Bottom Entry	NA	2102
	.265	6.73	Bandolier Posts	NA	NA	Top Entry, Mod IV	2095	2096
2	**.355**	9.02	Breakaway** (Unshrouded)	2054, 2065**	2056, 2067**	Top Entry, Mod IV	2095	2096
	.385	9.78	Low Profile Shrouded	NA	NA	Top Entry, Mod IV	NA	2096
3	**.418**	1.06	Surface Mount** Breakaway (Unshrouded)	NA	2069	Surface Mount**, Mod IV, Top Entry	NA	2103
2*	**.430**	10.92	Breakaway** (Unshrouded)	2054, 2065**	2056, 2067**	Top Entry, Mod II	2092	2093
4*	**.440**	11.18	Shrouded, Mod II	2071	2073, 2074	Top Entry, Mod II or Mod IV	2092, 2095	2093, 2096
	.528	13.41	Stacking Shroud (See Note 2.)	NA	NA	Inner Board Receptacle (See Note 2.)	NA	NA
	.547	13.89	Stacking Shroud (See Note 2.)	NA	NA	Outer Board Receptacle (See Note 2.)	NA	NA
4	**.550**	13.97	Two-Piece Header Connector System	NA	2110, 2111	Two-Piece Receptacle** Connector System	NA	2109**
	.748	19.00	Stacking Shroud (See Note 2.)	NA	NA	Inner Board Receptacle (See Note 2.)	NA	NA
	.768	19.51	Stacking Shroud (See Note 2.)	NA	NA	Outer Board Receptacle (See Note 2.)	NA	NA
	.785	19.94	Shrouded Stacking (Limited Sizes)	NA	NA	Stacking Receptacle (Limited Sizes)	NA	NA
	1.200	30.48	Shrouded Stacking (Limited Sizes)	NA	NA	Stacking Receptacle (Limited Sizes)	NA	NA
	Various		Stacking Unshrouded	NA	NA	Mod II/IV Receptacles, Top/Bottom Entry	Various	Various

**High temperature version available, see page ref. listed.

Notes: 1 Headers listed are standard through hole versions. Many headers are available with retention feature and ACTION PIN posts. See product specification pages in individual sections for option availability.

2 These headers and receptacles are Related Board-to-Board products. They are not part of the AMPMODU **.025** [0.64] Square Product Family.

Board-to-Board Stacking Heights (By Receptacle/Header Combination)

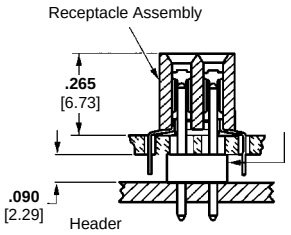

Figure 1
Double-Row, Mod IV, Bottom Entry, Breakaway Header

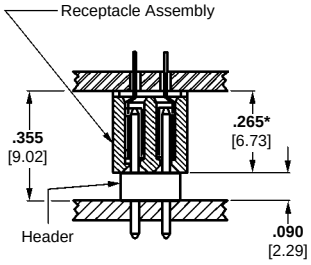

Figure 2
Double-Row, Mod IV, Top Entry, Breakaway Header
*Mod II Receptacle Height is .340 [8.64] for a total stack height of .430 [10.92]

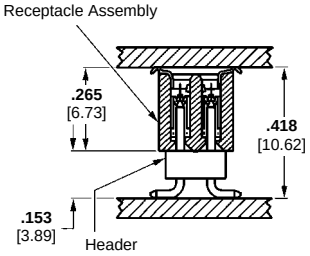

Figure 3
Double-Row, Mod IV, Surface-Mount, Top Entry, Receptacle and Surface-Mount Breakaway Header

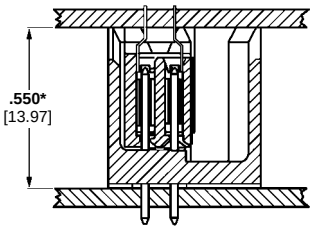

Figure 4
Double-Row, Two-Piece Receptacle and Two-Piece Shrouded Header
*Mod II Shrouded Header Height is .440 [11.18] for a total stack height of .440 [11.18]

For complete product information, order Catalog 1307819

Products for Industrial & Commercial Applications
Dimensions are shown for reference purposes only.
Dimensions are in inches and millimeters unless otherwise specified. Values in brackets are metric equivalents.
Specifications subject to change.
Technical Support Center
1-800-522-6752
www.tycoelectronics.com

Standard Headers—Unshrouded

Product Facts

- **Variety of popular sizes available**
- **Substantial time/labor savings—install all posts at one time**
- **Vertical and right-angle versions available in single- and double-row configurations**
- **Triple-row version available in vertical configuration with .230 [5.84] mating length**
- **Copper alloy posts**
- **Choice of select gold or tin-lead plated posts**
- **Mating length for single and double row is .318 [8.08]**
- **Flame retardant, black thermoplastic housings; 94V-0 rated**
- **Recognized under the Component Program of Underwriters Laboratories Inc., File No. E28476**
- **Certified by Canadian Standards Association, File No. LR 7189**

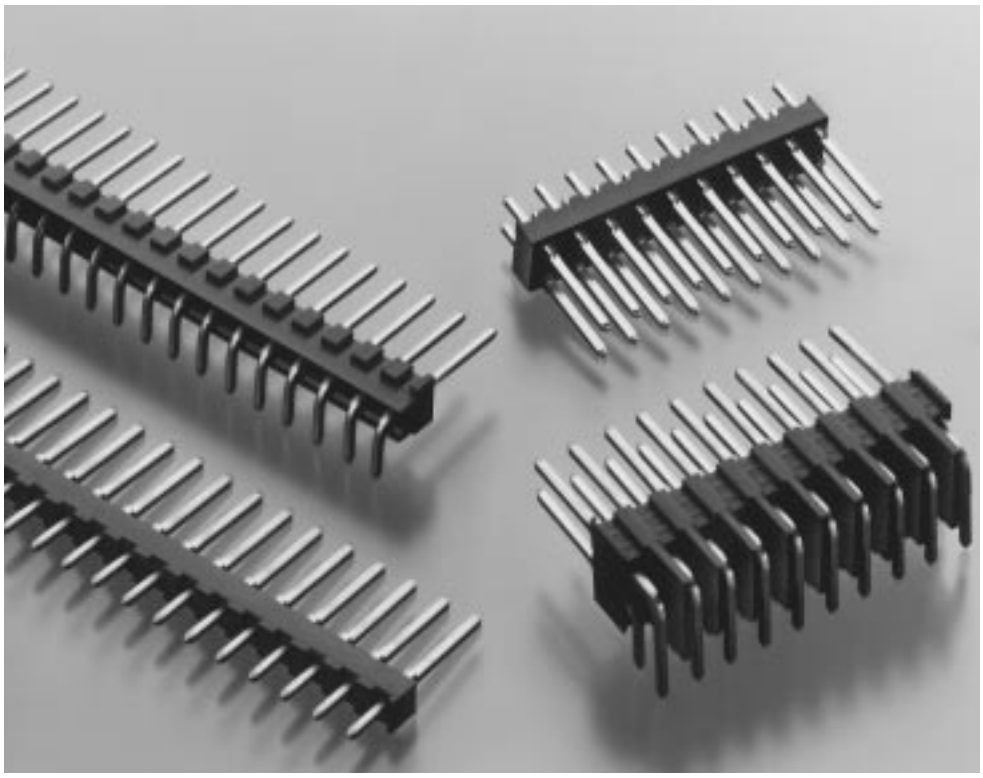

Performance Characteristics:

Electrical:

Insulation Resistance—5,000 megohms minimum initial

Dielectric Withstanding Voltage—750 V rms at sea level

Environmental:

Operating Temperature—-65°C to +105°C (black thermoplastic housings)

Current—3 amperes maximum per contact

For complete product information, order Catalog 1307819

Products for Industrial & Commercial Applications

Dimensions are shown for reference purposes only.

Dimensions are in inches and millimeters unless otherwise specified. Values in brackets are metric equivalents.

Specifications subject to change.

Technical Support Center
1-800-522-6752
www.tycoelectronics.com

Standard Headers—Unshrouded, Single Row, .100 [2.54] Centerline

.025 [0.64] Square Straight Post



Material and Finish:

Housing—Black thermoplastic, 94V-0 rated

Posts—Copper alloy, plated as follows:

Plating A—Selectively plated .000030 [0.00076] gold on contact area, with gold flash over .000050 [0.00127] nickel on entire post

Plating B—Selectively plated .000015 [0.00038] gold on contact area, with gold flash over .000050 [0.00127] nickel on entire post

Tin-Lead/Nickel—Plating option available; minimum order quantities may apply. Consult AMP.

Related Product Data:

Mateable Connectors—Refer to the Mating Post Selection Guide (page 2045)

Technical Documents: page 2160

See mating connector for applicable product and application specifications.

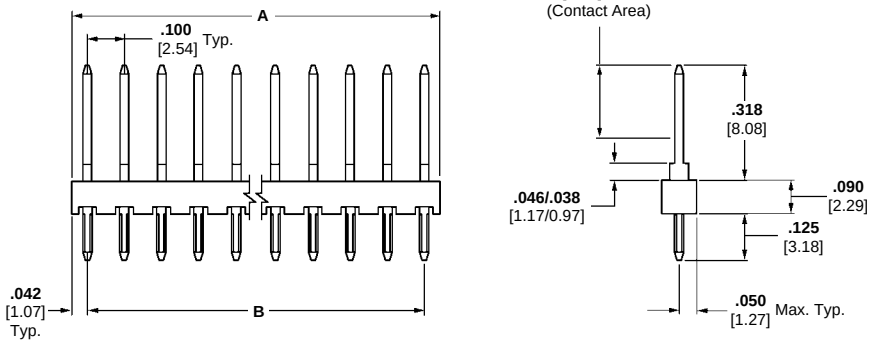

No. of Positions	Dimensions A	Dimensions B	Post Plating/Part Numbers Plating A	Post Plating/Part Numbers Plating B
1	**.084** 2.13	—	87220-1	87224-1
2	**.184** 4.67	**.100** 2.54	87220-2	87224-2
3	**.284** 7.21	**.200** 5.08	87220-3	87224-3
4	**.384** 9.75	**.300** 7.62	87220-4	87224-4
5	**.484** 12.29	**.400** 10.16	87220-5	87224-5
6	**.584** 14.83	**.500** 12.70	87220-6	87224-6
7	**.684** 17.37	**.600** 15.24	87220-7	—
8	**.784** 19.91	**.700** 17.78	87220-8	87224-8
10	**.984** 24.99	**.900** 22.86	1-87220-0	1-87224-0
14	**1.384** 35.15	**1.300** 33.02	1-87220-4	1-87224-4
20	**1.984** 50.39	**1.900** 48.26	2-87220-0	2-87224-0
40	**3.984** 101.19	**3.900** 99.06	—	4-87224-0

For complete product information, order Catalog 1307819

Products for Industrial & Commercial Applications

Dimensions are shown for reference purposes only.

Dimensions are in inches and millimeters unless otherwise specified. Values in brackets are metric equivalents.

Specifications subject to change.

Technical Support Center
1-800-522-6752
www.tycoelectronics.com

Standard Headers—Unshrouded, Single Row, .100 [2.54] Centerline

.025 [0.64] Square Right-Angle Post



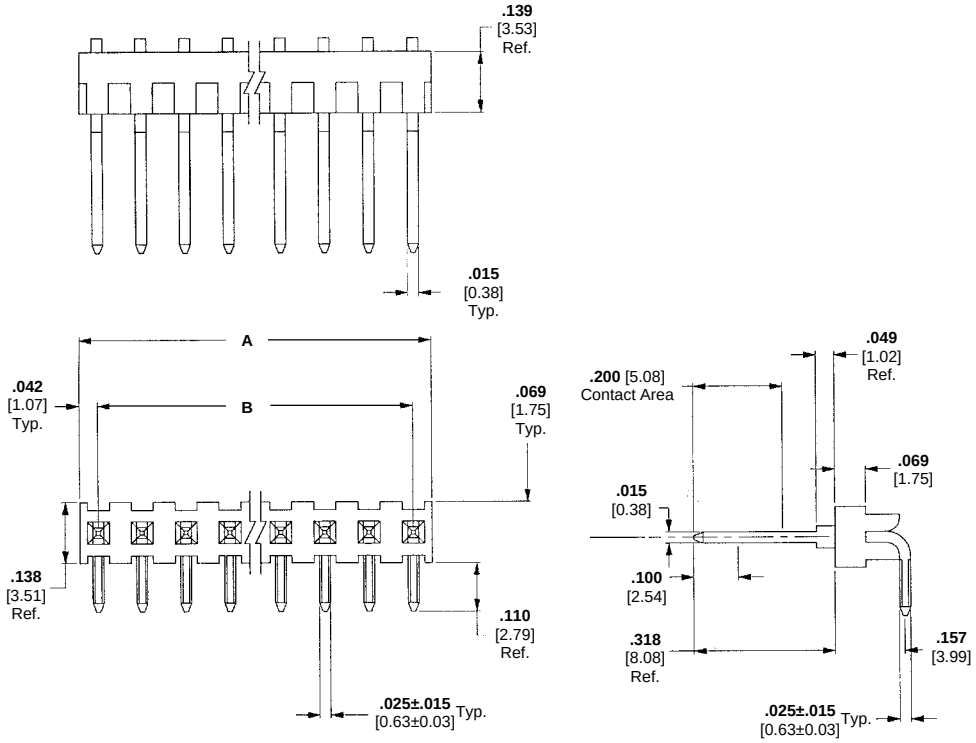

Material and Finish:

Housing—Black thermoplastic, 94V-0 rated

Posts—Copper alloy, plated as follows:

Plating A—Selectively plated .000030 [0.00076] gold on contact area, with gold flash over .000050 [0.00127] nickel on entire post

Plating B—Selectively plated .000015 [0.00038] gold on contact area, with gold flash over .000050 [0.00127] nickel on entire post

Tin-Lead/Nickel—Plating option available; minimum order quantities may apply. Consult AMP.

Related Product Data:

Mateable Connectors—Refer to the Mating Post Selection Guide (page 2045)

Technical Documents: page 2160

See mating connector for applicable product and application specifications.

No. of Positions	Dimensions		Post Plating/Part Numbers	
	A	B	Plating A	Plating B
2	**.184** 4.67	**.100** 2.54	87232-2	87233-2
3	**.284** 7.21	**.200** 5.08	87232-3	—
4	**.384** 9.75	**.300** 7.62	87232-4	87233-4
6	**.584** 14.83	**.500** 12.70	—	87233-6
10	**.984** 24.99	**.900** 22.86	1-87232-0	—

Standard Headers—Unshrouded, Double-Row, .100 x .100 [2.54 x 2.54] Centerline

.025 [0.64] Square Straight Post



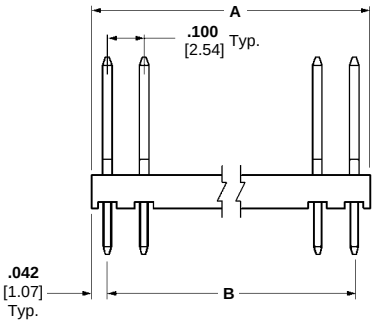

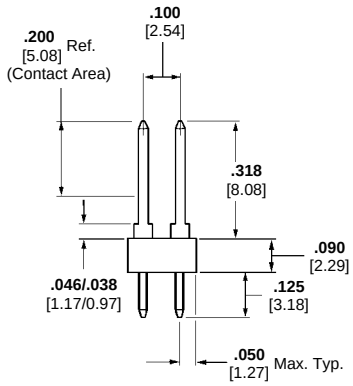

Material and Finish:

Housing—Black thermoplastic, 94V-0 rated

Posts—Copper alloy, plated as follows:

Plating A—Selectively plated .000030 [0.00076] gold on contact area, with gold flash over .000050 [0.00127] nickel on entire post

Plating B—Selectively plated .000015 [0.00038] gold on contact area, with gold flash over .000050 [0.00127] nickel on entire post

Tin-Lead/Nickel—Plating option available; minimum order quantities may apply. Consult AMP.

Related Product Data:

Mateable Connectors—Refer to the Mating Post Selection Guide (page 2045)

Accessories:

Barrier Insert—page 2114

Technical Documents: page 2160

See mating connector for applicable product and application specifications.

No. of Positions	Dimensions				Post Plating/Part Numbers	
	A		B		Plating A	Plating B
2	**.084**	2.13	—		1-87215-0	87227-1
4	**.184**	4.67	**.100**	2.54	1-87215-1	87227-2
6	**.284**	7.21	**.200**	5.08	1-87215-2	87227-3
8	**.384**	9.75	**.300**	7.62	87215-1	87227-4
10	**.484**	12.29	**.400**	10.16	87215-2	87227-5
12	**.584**	14.83	**.500**	12.70	87215-3	87227-6
14	**.684**	17.37	**.600**	15.24	87215-4	87227-7
16	**.784**	19.91	**.700**	17.78	87215-5	87227-8
20	**.984**	24.99	**.900**	22.86	87215-7	1-87227-0
26	**1.284**	32.61	**1.200**	30.48	87215-9	1-87227-3
34	**1.684**	42.77	**1.600**	40.64	1-87215-7	1-87227-7
40	**1.984**	50.39	**1.900**	48.26	2-87215-0	2-87227-0
80	**3.984**	101.19	**3.900**	99.06	4-87215-0	4-87227-0

Standard Headers—Unshrouded, Double-Row, .100 x .100 [2.54 x 2.54] Centerline

.025 [0.64] Square Right-Angle Post



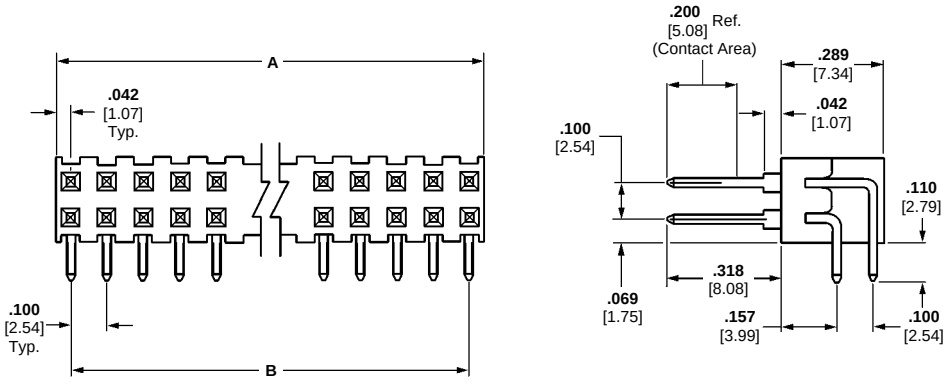

Material and Finish:

Housing—Black thermoplastic, 94V-0 rated

Posts—Copper alloy, plated as follows:

Plating A—Selectively plated .000030 [0.00076] gold on contact area, with gold flash over .000050 [0.00127] nickel on entire post

Plating B—Selectively plated .000015 [0.00038] gold on contact area, with gold flash over .000050 [0.00127] nickel on entire post

Tin-Lead/Nickel—Plating option available; minimum order quantities may apply. Consult AMP.

Related Product Data:

Mateable Connectors—Refer to the Mating Post Selection Guide (page 2045)

Technical Documents: page 2160

See mating connector for applicable product and application specifications.

No. of Positions	Dimensions		Post Plating/Part Numbers	
	A	B	Plating A	Plating B
2	**.084** 2.13	—	1-86479-3	87230-1
6	**.284** 7.21	**.200** 5.08	1-86479-5	87230-3
8	**.384** 9.75	**.300** 7.62	1-86479-6	87230-4
10	**.484** 12.29	**.400** 10.16	86479-3	87230-5
12	**.584** 14.83	**.500** 12.70	86479-4	—
14	**.684** 17.37	**.600** 15.24	86479-5	87230-7
16	**.784** 19.91	**.700** 17.78	86479-2	87230-8
20	**.984** 24.99	**.900** 22.86	86479-1	1-87230-0
26	**1.284** 32.61	**1.200** 30.48	1-86479-0	1-87230-3
40	**1.984** 50.39	**1.900** 48.26	2-86479-4	2-87230-0
50	**2.484** 63.09	**2.400** 60.96	2-86479-9	—

Standard Headers—Unshrouded, Triple-Row, .100 [2.54] Centerline

.025 [0.64] Square Straight Post



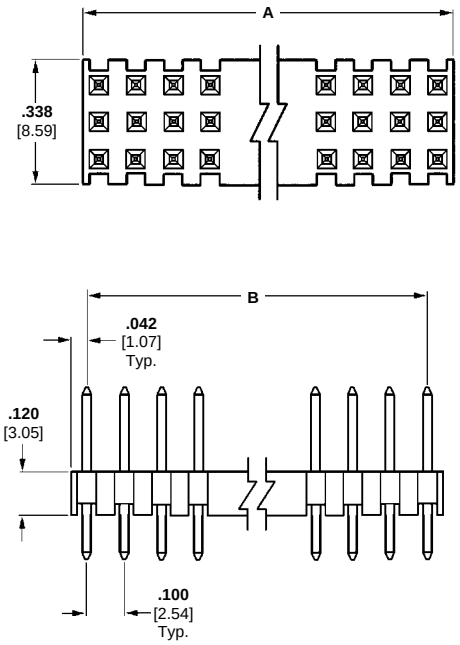

Material and Finish:

Housing—Black thermoplastic, 94V-0 rated

Posts—Copper alloy, duplex plated 000030 [0.00076] gold on contact area, .000100-.000200 [0.00254-0.00508] bright tin-lead on solder area, with entire post underplated .000050 [0.00127] nickel

Technical Documents: page 2160

See mating connector for applicable product and application specifications.

No. of Positions	Dimensions		Part Numbers
	A	B	
12	**.384** 9.75	**.300** 7.62	103817-2
24	**.784** 19.91	**.700** 17.78	103817-6
30	**.984** 24.99	**.900** 22.86	103817-8

For complete product information, order Catalog 1307819

Products for Industrial & Commercial Applications

Dimensions are shown for reference purposes only.

Dimensions are in inches and millimeters unless otherwise specified. Values in brackets are metric equivalents.

Specifications subject to change.

Technical Support Center
1-800-522-6752
www.tycoelectronics.com

Breakaway and Retention Headers—Unshrouded

Product Facts

- **Design and inventory versatility—headers can be broken into any size needed**
- **Variety of popular sizes available**
- **Substantial time/labor savings—install all posts at one time**
- **Vertical and right-angle versions available in single- and double-row configurations**
- **Phosphor bronze posts**
- **Choice of gold duplex or tin-lead plated posts**
- **Post lengths include .230 [5.84] and .318 [8.08] for connector mating**
- **Board retention feature available**
- **Flame retardant, black thermoplastic housings; 94V-0 rated**
- **Recognized under the Component Program of Underwriters Laboratories Inc., File No. E28476**
- **Certified by Canadian Standards Association, File No. LR 7189**



Photo 98186

Performance Characteristics

Electrical:

Insulation Resistance—5,000 megohms minimum initial

Dielectric Withstanding Voltage—750 V rms at sea level

Environmental:

Operating Temperature—-65°C to +105°C (black thermoplastic housings)

Current—3 amperes maximum per contact

Breakaway Headers—Unshrouded, Single-Row, .100 [2.54] Centerline

.025 [0.64] Square Straight Post



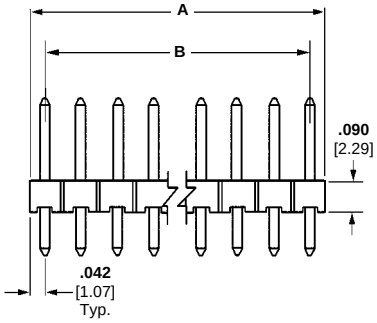

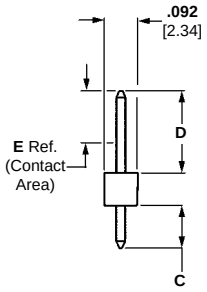

Material and Finish:

Housing—Black thermoplastic, 94V-0 rated

Posts—Phosphor bronze, plated as follows:

Plating A—Duplex plated .000030 [0.00076] gold on contact area, .000100-.000200 [0.00254-0.00508] tin-lead on solder area, with entire post underplated .000050 [0.00127] nickel

Plating B—Duplex plated .000015 [0.00038] gold on contact area, .000100-.000200 [0.00254-0.00508] tin-lead on solder area, with entire post underplated .000050 [0.00127] nickel

Plating C—.000100-.000200 [0.00254-0.00508] tin-lead over .000050 [0.00127] nickel on entire post

Related Product Data:

Mateable Connectors—Refer to the Mating Post Selection Guide (page 2045)

Technical Documents: page 2160

See mating connector for applicable product and application specifications.

No. of Positions	Dimensions A		Dimensions B		C = .090 [2.29] D = .230 [5.84] E = .185 [4.70] Post Plating/Part Numbers		C = .120 [3.05] D = .230 [5.84] E = .185 [4.70] Post Plating/Part Numbers			C = .125 [3.18] D = .318 [8.08] E = .200 [5.08] Post Plating/Part Numbers		
					Plating A	Plating C	Plating A	Plating B	Plating C	Plating A	Plating B	Plating C
1	**.084**	2.13	—		103747-1	103741-1	103239-1	103185-1	103327-1	102976-1	—	103321-1
2	**.184**	4.67	**.100**	2.54	103747-2	103741-2	—	103185-2	103327-2	102976-2	102972-2	103321-2
3	**.284**	7.21	**.200**	5.08	103747-3	103741-3	—	—	103327-3	102976-3	102972-3	103321-3
4	**.384**	9.75	**.300**	7.62	103747-4	—	103239-4	103185-4	103327-4	—	102972-4	103321-4
5	**.484**	12.29	**.400**	10.16	—	—	103239-5	103185-5	—	102976-5	—	103321-5
6	**.584**	14.83	**.500**	12.70	—	—	—	103185-6	—	102976-6	—	—
8	**.784**	19.91	**.700**	17.78	103747-8	—	—	103185-8	—	102976-8	102972-8	103321-8
10	**.984**	24.99	**.900**	22.86	—	—	—	—	1-103327-0	—	—	—
12	**1.184**	30.07	**1.100**	27.94	—	—	—	1-103185-2	—	—	—	—
14	**1.384**	35.15	**1.300**	33.02	—	—	—	1-103185-4	1-103327-4	—	—	1-103321-4
20	**1.984**	50.39	**1.900**	48.26	—	—	—	—	—	—	2-102972-0	—
36	**3.584**	91.03	**3.500**	88.90	—	—	—	3-103185-6	—	—	—	—
40	**3.984**	101.19	**3.900**	99.06	4-103747-0	—	4-103239-0	4-103185-0	4-103327-0	4-102976-0	4-102972-0	4-103321-0

Notes: 1 Headers may be broken to desired number of positions using **Tool Kit No. 314818-1** (not shown).
2 Other tail lengths are available, consult Tyco Electronics.

For complete product information, order Catalog 1307819

Breakaway Headers––Unshrouded, Single Row, .100 [2.54] Centerline

.025 [0.64] Square Right-Angle Post



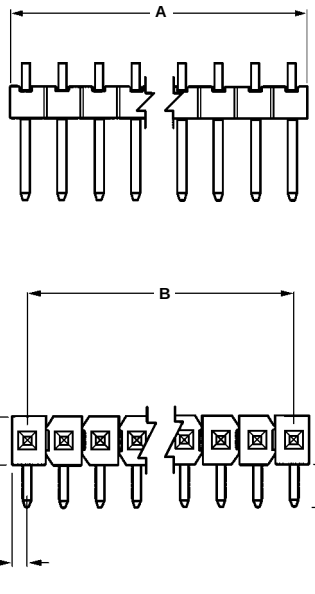

Material and Finish:

Housing—Black thermoplastic, 94V-0 rated

Posts—Phosphor bronze, plated as follows:

Plating A—Duplex plated .000030 [0.00076] gold on contact area, .000100-.000200 [0.00254-0.00508] tin-lead on solder area, with entire post underplated .000050 [0.00127] nickel

Plating B—Duplex plated .000015 [0.00038] gold on contact area, .000100-.000200 [0.00254-0.00508] tin-lead on solder area, with entire post underplated .000050 [0.00127] nickel

Plating C—.000100-.000200 [0.00254-0.00508] tin-lead over .000050 [0.00127] nickel on entire post

Related Product Data:

Mateable Connectors—Refer to the Mating Post Selection Guide (page 2045)

Technical Documents: page 2160

See mating connector for applicable product and application specifications.

No. of Positions	Dimensions A		Dimensions B		C = .090 [2.29] D = .230 [5.84] E = .185 [4.70] Post Plating/Part Numbers		C = .120 [3.05] D = .230 [5.84] E = .185 [4.70] Post Plating/Part Numbers			C = .110 [2.79] D = .318 [8.08] E = .200 [5.08] Post Plating/Part Numbers	
					Plating A	Plating C	Plating A	Plating B	Plating C	Plating B	Plating C
2	**.184**	4.67	**.100**	2.54	—	103759-2	—	—	—	—	—
4	**.384**	9.75	**.300**	7.62	—	103759-4	—	103325-4	—	—	—
6	**.584**	14.83	**.500**	12.70	—	—	103148-6	—	—	—	—
8	**.784**	19.91	**.700**	17.78	103765-8	—	—	—	103329-8	—	—
12	**1.184**	30.07	**1.100**	27.94	—	—	—	—	—	—	1-103323-2
36	**3.584**	91.03	**3.500**	88.90	—	—	—	—	—	—	3-103323-6
40	**3.984**	101.19	**3.900**	99.06	4-103765-0	—	—	4-103325-0	4-103329-0	4-102974-0	4-103323-0

Notes: 1 Headers may be broken to desired number of positions using **Tool Kit No. 314818-1** (not shown).
2 Other tail lengths are available, consult Tyco Electronics.

Breakaway Headers—Unshrouded, Double-Row, .100 x .100 [2.54 x 2.54] Centerline

.025 [0.64] Square Straight-Angle Post



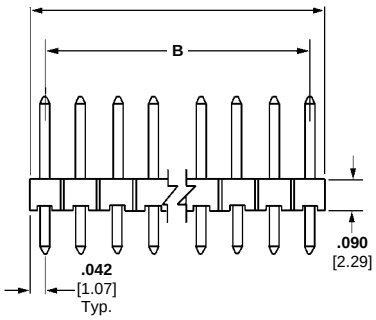

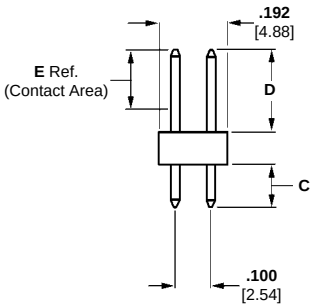

Material and Finish:

Housing—Black thermoplastic, 94V-0 rated

Posts—Phosphor bronze, plated as follows:

Plating A—Duplex plated .000030 [0.00076] gold on contact area, .000100-.000200 [0.00254-0.00508] tin-lead on solder area, with entire post underplated .000050 [0.00127] nickel

Plating B—Duplex plated .000015 [0.00038] gold on contact area, .000100-.000200 [0.00254-0.00508] tin-lead on solder area, with entire post underplated .000050 [0.00127] nickel

Plating C—.000100-.000200 [0.00254-0.00508] tin-lead over .000050 [0.00127] nickel on entire post

Related Product Data:

Mateable Connectors—Refer to the Mating Post Selection Guide (page 2045)

Accessories:

Barrier Insert—page 2114

Technical Documents: page 2160

See mating connector for applicable product and application specifications.

No. of Positions	Dimensions A		Dimensions B		C = .090 [2.29] D = .230 [5.84] E = .185 [4.70] Post Plating/Part Numbers		C = .120 [3.05] D = .230 [5.84] E = .185 [4.70] Post Plating/Part Numbers			C = .125 [3.18] D = .318 [8.08] E = .200 [5.08] Post Plating/Part Numbers		
					Plating A	Plating C	Plating A	Plating B	Plating C	Plating A	Plating B	Plating C
2	**.084**	2.13	—		103783-1	—	103240-1	103186-1	103328-1	—	102973-1	—
4	**.184**	4.67	**.100**	2.54	—	103777-2	103240-2	103186-2	—	102977-2	102973-2	—
6	**.284**	7.21	**.200**	5.08	103783-3	—	103240-3	103186-3	103328-3	102977-3	102973-3	103322-3
8	**.384**	9.75	**.300**	7.62	—	—	103240-4	103186-4	103328-4	102977-4	102973-4	—
10	**.484**	12.29	**.400**	10.16	103783-5	103777-5	103240-5	103186-5	103328-5	102977-5	—	—
12	**.584**	14.83	**.500**	12.70	—	103777-6	—	103186-6	—	102977-6	—	—
14	**.684**	17.37	**.600**	15.24	103783-7	103777-7	103240-7	103186-7	103328-7	—	102973-7	103322-7
16	**.784**	19.91	**.700**	17.78	—	—	103240-8	103186-8	103328-8	102977-8	102973-8	—
18	**.884**	22.45	**.800**	20.32	—	—	—	—	—	—	—	—
20	**.984**	24.99	**.900**	22.86	1-103783-0	—	—	1-103186-0	1-103328-0	1-102977-0	1-102973-0	1-103322-0
24	**1.184**	30.07	**1.100**	27.94	1-103783-2	—	—	—	—	—	—	—
26	**1.284**	32.61	**1.200**	30.48	—	—	—	1-103186-3	1-103328-3	1-102977-3	1-102973-3	—
30	**1.484**	37.69	**1.400**	35.56	—	—	—	1-103186-5	—	—	—	—
32	**1.584**	40.23	**1.500**	38.10	—	—	—	1-103186-6	—	—	—	—
34	**1.684**	42.77	**1.600**	40.64	—	—	1-103240-7	1-103186-7	1-103328-7	—	—	—
40	**1.984**	50.39	**1.900**	48.26	—	—	2-103240-0	2-103186-0	—	2-102977-0	2-102973-0	—
50	**2.484**	63.09	**2.400**	60.96	—	—	—	—	—	—	2-102973-5	—
80	**3.984**	101.19	**3.900**	99.06	4-103783-0	4-103777-0	—	4-103186-0	4-103328-0	4-102977-0	4-102973-0	4-103322-0

Notes: [1] Headers may be broken to desired number of positions using **Tool Kit No. 314818-1** (not shown).
[2] Other tail lengths are available, consult Tyco Electronics.

For complete product information, order Catalog 1307819

Products for Industrial & Commercial Applications

Dimensions are shown for reference purposes only.

Dimensions are in inches and millimeters unless otherwise specified. Values in brackets are metric equivalents.

Specifications subject to change.

Technical Support Center
1-800-522-6752
www.tycoelectronics.com

Breakaway Headers—Unshrouded, Double-Row, .100 x .100 [2.54 x 2.54] Centerline

.025 [0.64] Square Right-Angle Post



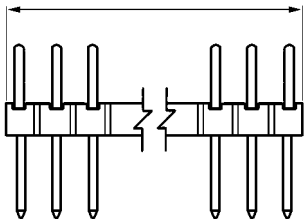

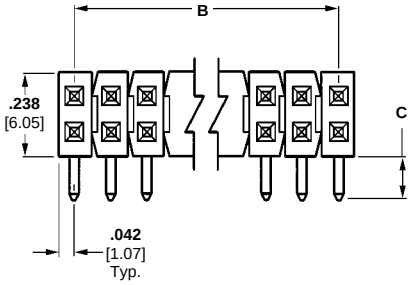

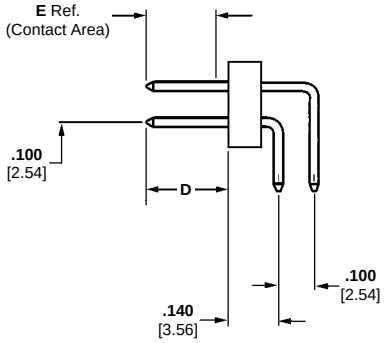

Material and Finish:

Housing—Black thermoplastic, 94V-0 rated

Posts—Phosphor bronze, plated as follows:

Plating A—Duplex plated .000030 [0.00076] gold on contact area, .000100-.000200 [0.00254-0.00508] tin-lead on solder area, with entire post underplated .000050 [0.00127] nickel

Plating B—Duplex plated .000015 [0.00038] gold on contact area, .000100-.000200 [0.00254-0.00508] tin-lead on solder area, with entire post underplated .000050 [0.00127] nickel

Plating C—.000100-.000200 [0.00254-0.00508] tin-lead over .000050 [0.00127] nickel on entire post

Related Product Data:

Mateable Connectors—Refer to the Mating Post Selection Guide (page 2045)

Technical Documents: page 2160

See mating connector for applicable product and application specifications.

No. of Positions	Dimensions A		Dimensions B		C = .090 [2.29] D = .230 [5.84] E = .185 [4.70]	C = .120 [3.05] D = .230 [5.84] E = .185 [4.70]			C = .110 [2.79] D = .318 [8.08] E = .200 [5.08]		
					Post Plating/Part Numbers	Post Plating/Part Numbers			Post Plating/Part Numbers		
					Plating A	Plating A	Plating B	Plating C	Plating A	Plating B	Plating C
8	**.384**	9.75	**.300**	7.62	—	—	—	—	—	102975-4	—
10	**.484**	12.29	**.400**	10.16	103801-5	—	103326-5	—	—	—	—
20	**.984**	24.99	**.900**	22.86	—	—	—	—	—	—	1-103324-0
80	**3.984**	101.19	**3.900**	99.06	4-103801-0	4-103149-0	4-103326-0	4-103330-0	4-102979-0	4-102975-0	4-103324-0

Notes: [1] Headers may be broken to desired number of positions using **Tool Kit No. 314818-1** (not shown).
[2] Other tail lengths are available, consult Tyco Electronics.

Breakaway Retention Headers—Unshrouded, Single Row, .100 [2.54] Centerline

.025 [0.64] Square Straight Post (with Board Retention Feature)



Photo 98184-8

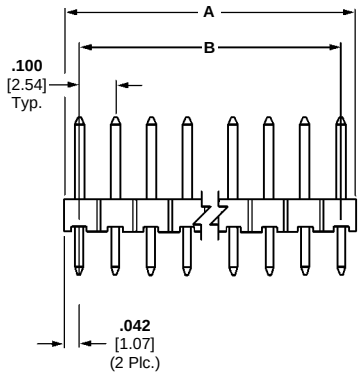

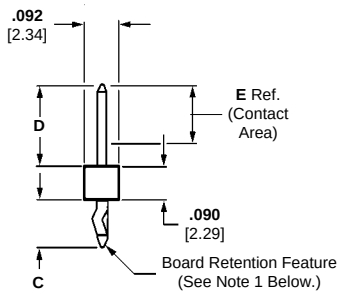

Material and Finish:

Housing—Black thermoplastic, 94V-0 rated

Posts—Phosphor bronze, plated as follows:

Plating A—Duplex plated .000030 [0.00076] gold on contact area, .000100-.000200 [0.00254-0.00508] tin-lead on solder area, with entire post underplated .000050 [0.00127] nickel

Plating B—Duplex plated .000015 [0.00038] gold on contact area, .000100-.000200 [0.00254-0.00508] tin-lead on solder area, with entire post underplated .000050 [0.00127] nickel

Plating C—.000100-.000200 [0.00254-0.00508] tin-lead over .000050 [0.00127] nickel on entire post

Performance Characteristics:

Insertion Force—12 lb. [53.4N] maximum

Retention Force—.25 lb. [1.11N] minimum

Related Product Data:

Mateable Connectors—Refer to the Mating Post Selection Guide (page 2045)

Technical Documents: page 2160

See mating connector for applicable product and application specifications.

No. of Positions	Dimensions A		Dimensions B		C = .120 [3.05] D = .230 [5.84] E = .185 [4.70] Post Plating/Part Numbers			C = .125 [3.18] D = .318 [8.08] E = .200 [5.08] Post Plating/Part Numbers
					Plating A	Plating B	Plating C	Plating B
3	**.284**	7.21	**.200**	5.08	104344-1	104345-1	104346-1	104427-1
4	**.384**	9.75	**.300**	7.62	104344-2	104345-2	—	—
6	**.584**	14.82	**.500**	12.70	—	—	—	104427-4

Notes: 1. Refer to the product drawing to determine the number and location of the board retention tails.
2. Other tail lengths are available, consult Tyco Electronics.

For complete product information, order Catalog 1307819

Products for Industrial & Commercial Applications

Dimensions are shown for reference purposes only.

Dimensions are in inches and millimeters unless otherwise specified. Values in brackets are metric equivalents.

Specifications subject to change.

Technical Support Center
1-800-522-6752
www.tycoelectronics.com

Breakaway Retention Headers—Unshrouded, Double Row, .100 x .100 [2.54 x 2.54] Centerline

.025 [0.64] Square Straight Post (with Board Retention Feature)



Photo 98185-7

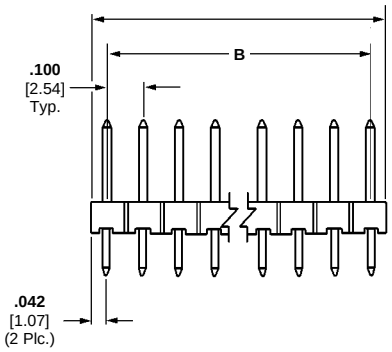

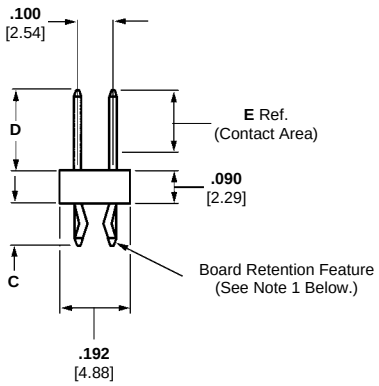

Material and Finish:

Housing—Black thermoplastic, 94V-0 rated

Posts—Phosphor bronze, plated as follows:

Plating A—Duplex plated .000030 [0.00076] gold on contact area, .000100-.000200 [0.00254-0.00508] tin-lead on solder area, with entire post underplated .000050 [0.00127] nickel

Plating B—Duplex plated .000015 [0.00038] gold on contact area, .000100-.000200 [0.00254-0.00508] tin-lead on solder area, with entire post underplated .000050 [0.00127] nickel

Plating C—.000100-.000200 [0.00254-0.00508] tin-lead over .000050 [0.00127] nickel on entire post

Performance Characteristics:

Insertion Force—12 lb. [53.4N] maximum

Retention Force—.25 lb. [1.11N] minimum

Related Product Data:

Mateable Connectors—Refer to the Mating Post Selection Guide (page 2045)

Accessories:

Barrier Insert—page 2114

Technical Documents: page 2160

See mating connector for applicable product and application specifications.

No. of Positions	Dimensions A		Dimensions B		C = .120 [3.05] D = .230 [5.84] E = .185 [4.70] Post Plating/Part Numbers			C = .125 [3.18] D = .318 [8.08] E = .200 [5.08] Post Plating/Part Numbers	
					Plating A	Plating B	Plating C	Plating A	Plating B
2	**.084**	2.13	—		104350-1	104351-1	104352-1	104432-1	104433-1
4	**.184**	4.67	**.100**	2.54	104350-2	—	—	—	—
6	**.284**	7.21	**.200**	5.08	—	—	—	104432-3	104433-3
8	**.384**	9.75	**.300**	7.62	104350-4	104351-4	—	104432-4	104433-4
10	**.484**	12.29	**.400**	10.16	104350-5	—	—	—	—
16	**.784**	19.91	**.700**	17.78	104350-8	104351-8	—	104432-8	104433-8
20	**.984**	24.99	**.900**	22.86	1-104350-0	—	—	—	1-104433-0

Notes: 1. Refer to the product drawing to determine the number and location of the board retention tails.
2. Other tail lengths are available, consult Tyco Electronics.

For complete product information, order Catalog 1307819

Products for Industrial & Commercial Applications

Dimensions are shown for reference purposes only.

Dimensions are in inches and millimeters unless otherwise specified. Values in brackets are metric equivalents.

Specifications subject to change.

Technical Support Center
1-800-522-6752
www.tycoelectronics.com

Breakaway Retention Headers—Unshrouded, Double Row, .100 x .100 [2.54 x 2.54] Centerline

.025 [0.64] Square Right-Angle Post (with Board Retention Feature)



Photo 98184-4

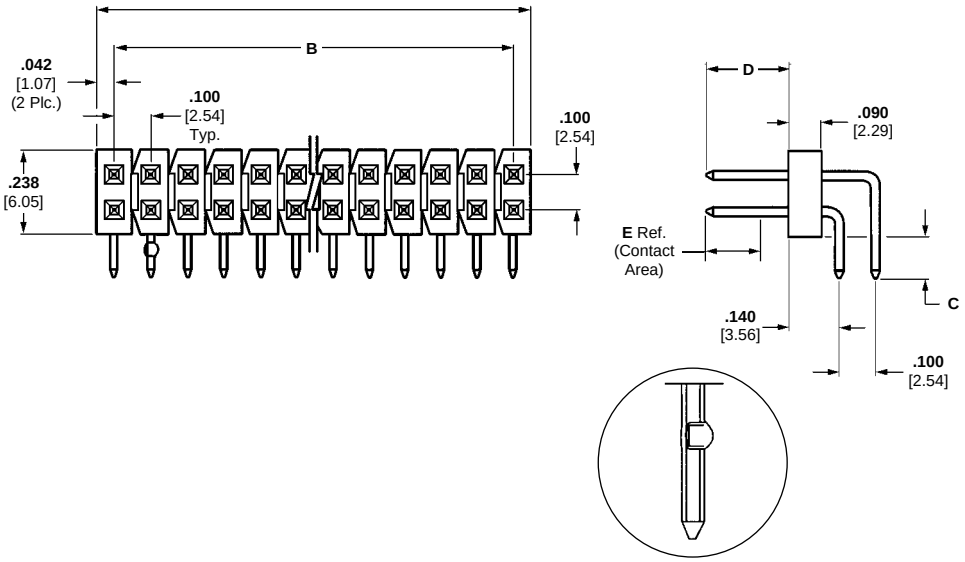

Board Retention using Swaged Tails (All Header Sizes)

No. of Positions	Dimensions A		Dimensions B		C = .120 [3.05] D = .230 [5.84] E = .185 [4.70] Post Plating/Part Numbers		
					Plating A	Plating B	Plating C
8	**.384**	9.75	**.300**	7.62	—	104354-4	—
10	**.484**	12.29	**.400**	10.16	104353-5	104354-5	—
20	**.984**	24.99	**.900**	22.86	—	—	1-104355-0

Notes: 1. Refer to the product drawing to determine the number and location of the board retention tails.
2. Other tail lengths are available, consult Tyco Electronics.

Material and Finish:

Housing—Black thermoplastic, 94V-0 rated

Posts—Phosphor bronze, plated as follows:

Plating A—Duplex plated .000030 [0.00076] gold on contact area, .000100-.000200 [0.00254-0.00508] tin-lead on solder area, with entire post underplated .000050 [0.00127] nickel

Plating B—Duplex plated .000015 [0.00038] gold on contact area, .000100-.000200 [0.00254-0.00508] tin-lead on solder area, with entire post underplated .000050 [0.00127] nickel

Plating C—.000100-.000200 [0.00254-0.00508] tin-lead over .000050 [0.00127] nickel on entire post

Performance Characteristics:

Insertion Force—12 lb. [53.4N] maximum

Retention Force—.25 lb. [1.11N] minimum

Related Product Data:

Mateable Connectors—Refer to the Mating Post Selection Guide (page 2045)

Technical Documents: page 2160

See mating connector for applicable product and application specifications.

AMPMODU Reeled Breakaway Headers

Features of Breakaway Headers

- **Design and inventory versatility - headers can easily be made into any size**
- **High Temperature Compatible**
- **Reduced part number base**
- **Reduced inventory burden**

Applications

- **Desktops & workstations**
- **Set-top boxes**
- **Televisions**
- **Automotive instrument panels & radios**
- **Medical and test equipment**

Benefits

- **Off the shelf availability**
- **Various header length capability using the same reel**
- **Reduction of inventory costs**
- **Economy version of the standard breakaway headers**

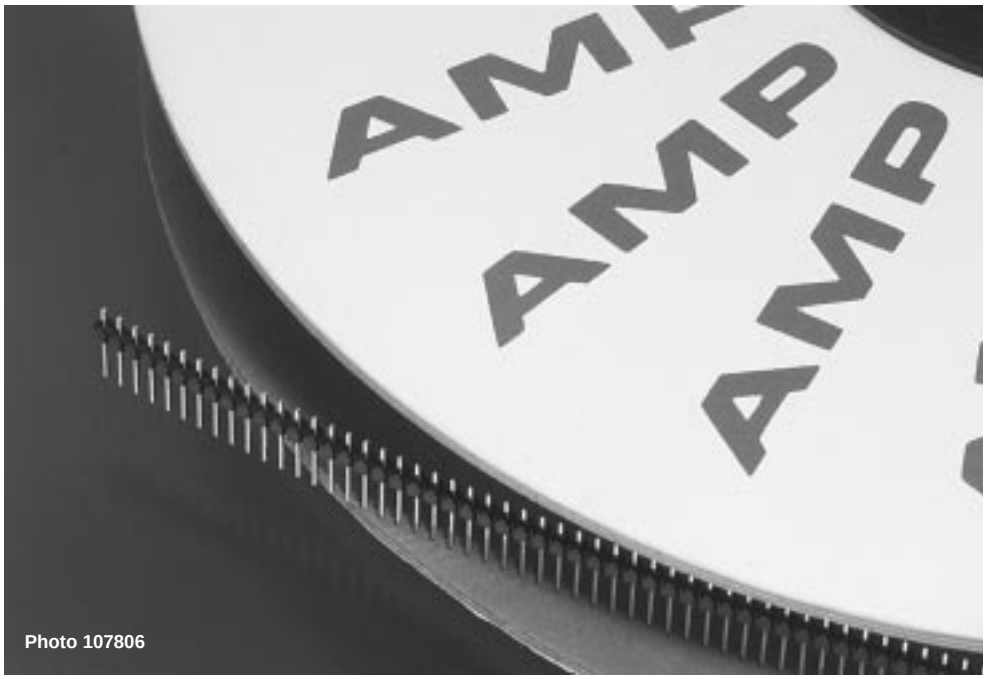

Photo 107806

AMP now offers AMPMODU reeled breakaway headers, which are used for board-to-board interconnections, on a continuous reel. The reeled breakaway headers are an economy version of the standard breakaway headers, and continue to provide the same high quality standards that AMP is known for in the connector industry.

Reeled breakaway headers provide the flexibility to be able to cut the headers to many different lengths, while only having to stock one part number. As a result, the amount of part numbers that need to be purchased and stored can be greatly reduced.

Reeled breakaway headers can be purchased in single and double rows with tin-lead, 5 Au, 15 Au, and 30 Au duplex plating. The lower applied cost also offers .230" and .318" mating lengths. (See standard breakaway-to-reeled header conversion chart for vertical headers on the reverse side of this sheet)

Potential industries include: computer peripherals, telecommunications equipment, consumer, automotive, medical and test equipment.

Tooling available from:
Robodyne Corporation
2818 Anthony Lane South
Minneapolis, MN 55418
USA
Phone: (612) 789-5277
Fax: (612) 789-6773

A pin retention and pin removal tooling option is also available in addition to cutting.

AMPMODU Reeled Breakaway Headers

Single Row

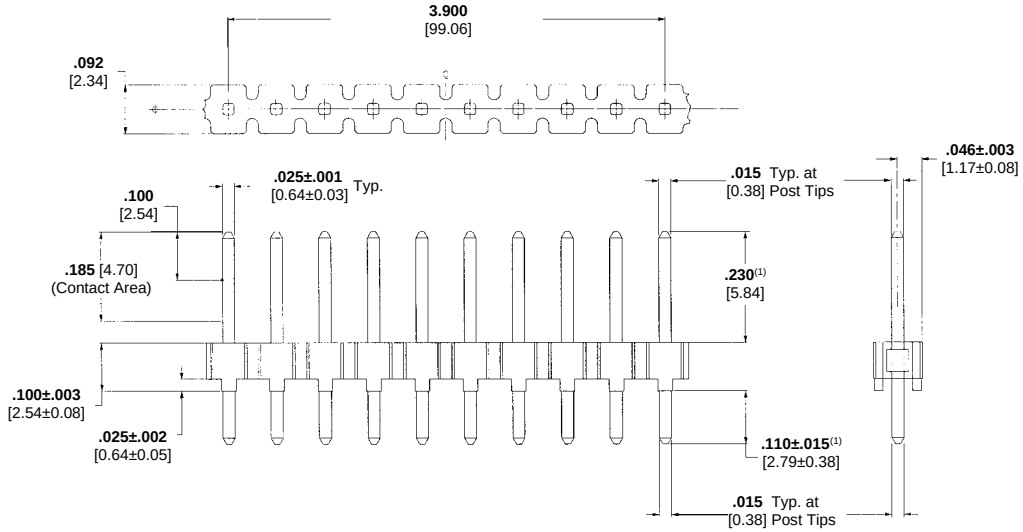

Double Row

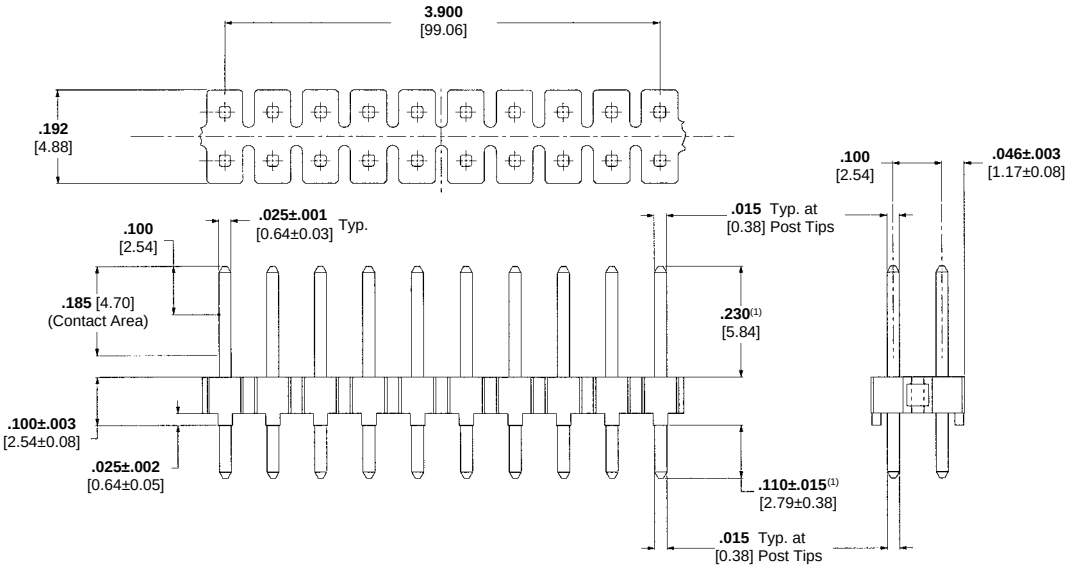

(1) See table for other mate and tail lengths.

Standard Breakaway-to-Reeled Header Conversion Chart (Vertical)								
	Double Row Headers				Single Row Headers			
	Existing AMP P/N	Make From Reeled P/N	Existing AMP P/N	Make From Reeled P/N	Existing AMP P/N	Make From Reeled P/N	Existing AMP P/N	Make From Reeled P/N
Plating Options	Mate: .318 Tail: .125	Mate: .318 Tail: .115	Mate: .230 Tail: .120	Mate: .230 Tail: .110	Mate: .318 Tail: .125	Mate: .318 Tail: .115	Mate: .230 Tail: .120	Mate: .230 Tail: .110
Tin-Lead	103322 146250	146853-1	103328 146254	146851-1	103321 146274	146852-1	103327 146278	146850-1
5 Au Duplex	146251	146857-1	146090 146255	146855-1	146275	146856-1	146089 146279	146854-1
15 Au Duplex	102973 146252	146861-1	103186 146256	146859-1	102972 146276	146860-1	103185 146280	146858-1
30 Au Duplex	102977 146253	146871-1	103240 146257	146869-1	102976 146277	146870-1	103239 146281	146868-1

***Note:** Reeled Headers are a functional substitute for standard breakaways, however there are visual differences (i.e. housing appearance and bow due to reeling requirement).

For complete product information, order Catalog 1307819

Products for Industrial & Commercial Applications

Dimensions are shown for reference purposes only.

Dimensions are in inches and millimeters unless otherwise specified. Values in brackets are metric equivalents.

Specifications subject to change.

Technical Support Center
1-800-522-6752
www.tycoelectronics.com

Breakaway Surface-Mount Compatible, High Temperature Headers––Unshrouded

Product Facts

- **Variety of popular sizes available**
- **Substantial time/labor savings—install all posts at one time**
- **Vertical and right-angle versions available in single- and double-row configurations**
- **Phosphor bronze posts**
- **Gold duplex and tin plated posts**
- **Post lengths include .230 [5.84] and .318 [8.08] for connector mating**
- **Black, glass-filled thermoplastic housings**
- **Recognized under the Component Program of Underwriters Laboratories Inc., File No. E28476**
- **Certified by Canadian Standards Association, File No. LR 7189**

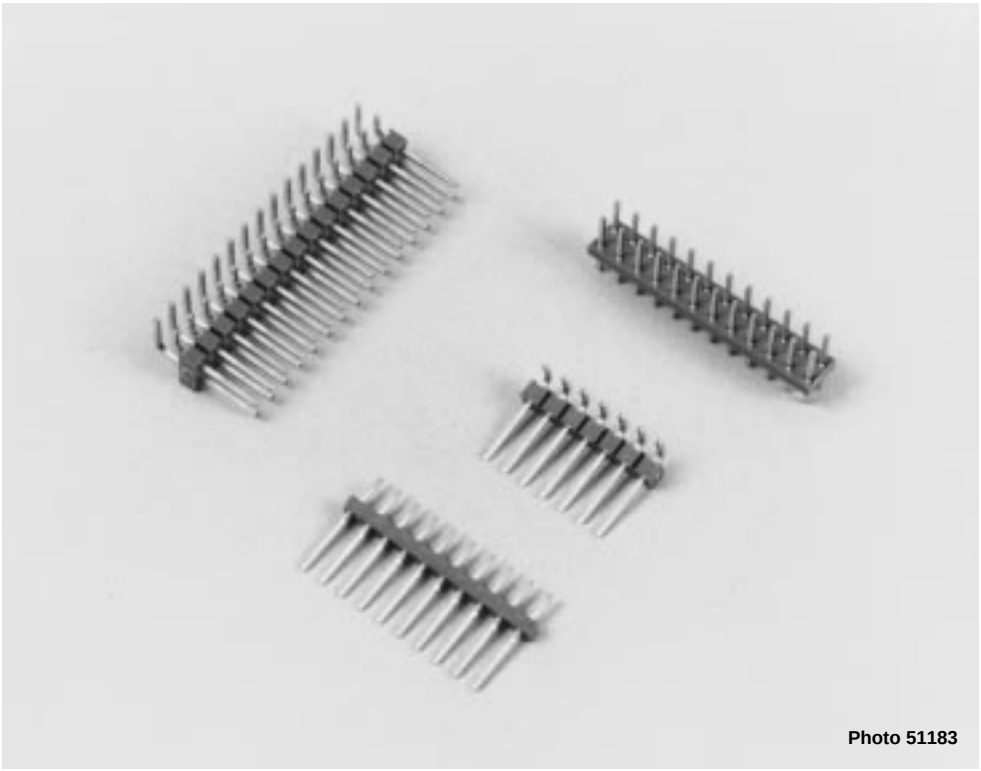

Photo 51183

The AMPMODU interconnection system provides interconnections with a unique modular concept.

AMPMODU mating posts are supplied typically as header assemblies. They are available in various populations to meet the interconnection and packaging requirements of your system.

Performance Characteristics:

Electrical:

Insulation Resistance—5,000 megohms minimum initial

Dielectric Withstanding Voltage—750 V rms at sea level

Current—3 amperes maximum per single contact (dependent upon mating receptacle)

Environmental:

Operating Temperature—-65°C to +105°C

For complete product information, order Catalog 1307819

Products for Industrial & Commercial Applications

Dimensions are shown for reference purposes only.

Dimensions are in inches and millimeters unless otherwise specified. Values in brackets are metric equivalents.

Specifications subject to change.

Technical Support Center
1-800-522-6752
www.tycoelectronics.com

Breakaway Surface-Mount Compatible, High Temperature Headers—Unshrouded, Single-Row, .100 [2.54] Centerline with Special Stand-offs

.025 [0.64] Square Straight Posts



Material and Finish:

Housing—Black thermoplastic, 94V-0 rated, high temperature compatible

Posts—Phosphor bronze, plated as follows:

Plating A—Duplex plated .000030 [0.00076] gold on contact area, .000100-.000200 [0.00254-0.00508] tin-lead on solder tail, with entire post underplated .000050 [0.00127] nickel

Plating B—Duplex plated .000015 [0.00038] gold on contact area, .000100-.000200 [0.00254-0.00508] tin-lead on solder tail, with entire post underplated .000050 [0.00127] nickel

Plating C—.000100-.000200 [0.00254-0.00508] tin-lead over .000050 [0.00127] nickel

Performance Characteristics (Board Retention Tails):

Insertion Force—12 lb [53.4N] Max.

Retention Force—.25 lb [1.11N] Min.

Related Product Data:

Mateable Connectors—Refer to the Mating Post Selection Guide (page 2045)

Technical Documents: page 2160

See mating connector for applicable product and application specifications.

Headers with Solder Tails

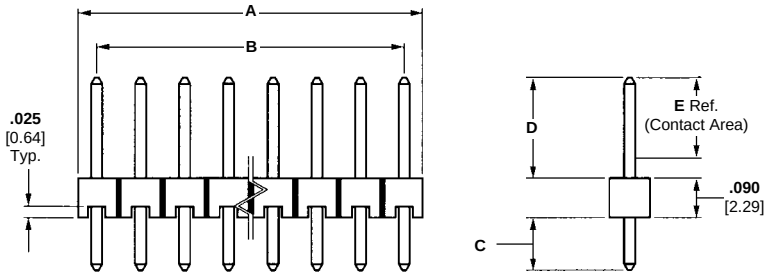

Headers with Board Retention Tails

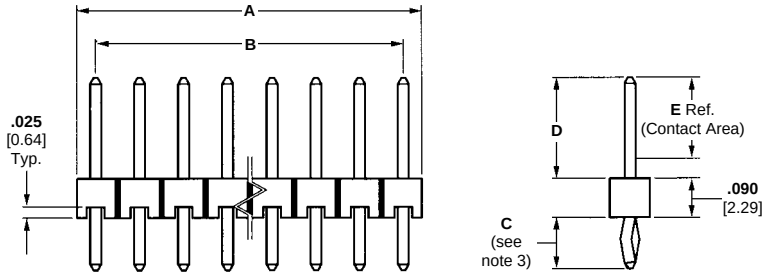

Header Style	No. of Positions	Dimensions A	Dimensions B	C = .090 [2.29] D = .230 [5.84] E = .185 [4.70] Post Plating/Part Numbers			C = .120 [3.05] D = .230 [5.84] E = .185 [4.70] Post Plating/Part Numbers			C = .125 [3.18] D = .318 [8.08] E = .200 [5.08] Post Plating/Part Numbers		
				Plating A	Plating B	Plating C	Plating A	Plating B	Plating C	Plating A	Plating B	Plating C
With Solder Tails (See Notes 1 and 2.)	1	**.084** 2.13	—	146285-1	146284-1	146282-1	146281-1	146280-1	146278-1	146277-1	146276-1	146274-1
	40	**3.984** 101.19	**3.900** 99.06	4-146285-0	4-146284-0	4-146282-0	4-146281-0	4-146280-0	4-146278-0	4-146277-0	4-146276-0	4-146274-0
With Board Retention Tails (See Notes 2 and 3.)	3	**.284** 7.21	**.200** 5.08	146297-3	146296-3	146294-3	146293-3	146292-3	146290-3	146289-3	146288-3	146286-3
	40	**3.984** 101.19	**3.900** 99.06	4-146297-0	4-146296-0	4-146294-0	4-146293-0	4-146292-0	4-146290-0	4-146289-0	4-146288-0	4-146286-0

Notes: 1. Headers without retention tails may be broken to the desired number of positions using **Tool Kit No. 314818-1 (not shown)**.
2. Headers are also available in sizes 2 thru 39 positions (with Solder Tails) and 4 thru 39 positions (with Board Retention Tails). When ordering, add the prefix and/or suffix (dash) numbers to the base part number that corresponds with the desired size. For example, the complete part number for an 8-position header with solder tails (C dimension .090 [2.29], post plating A) would be 146285-8. The complete part number for a 26-position header with board retention tails (C dimension .120 [3.05], post plating B) would be 2-146292-6. This part numbering system applies only to this page.
3. For C dimensions .120 [3.05] and .125 [3.18], board retention using kinked tails are for headers 6 positions and smaller; headers 7 positions and larger use swaged tails. Headers with a C dimension of .090 [2.29] have swaged tails for all sizes.

For complete product information, order Catalog 1307819

Products for Industrial & Commercial Applications

Dimensions are shown for reference purposes only.

Dimensions are in inches and millimeters unless otherwise specified. Values in brackets are metric equivalents.

Specifications subject to change.

Technical Support Center
1-800-522-6752
www.tycoelectronics.com

Breakaway Surface-Mount Compatible, High Temperature Headers—Unshrouded, Single-Row, .100 [2.54] Centerline

.025 [0.64] Square Right-Angle Posts



Material and Finish:

Housing—Black thermoplastic, 94V-0 rated, high temperature compatible

Posts—Phosphor bronze, duplex plated .000030 [0.00076] gold on contact area, .000100-.000200 [0.00254-0.00508] matte tin-lead on solder tail, with entire post underplated .000050 [0.00127] nickel

Performance Characteristics (Board Retention Tails):

Insertion Force—12 lb [53.4N] Max.

Retention Force—.25 lb [1.11N] Min.

Related Product Data:

Mateable Connectors—Refer to the Mating Post Selection Guide (page 2045)

Technical Documents: page 2160

See mating connector for applicable product and application specifications.

Headers with Solder Tails

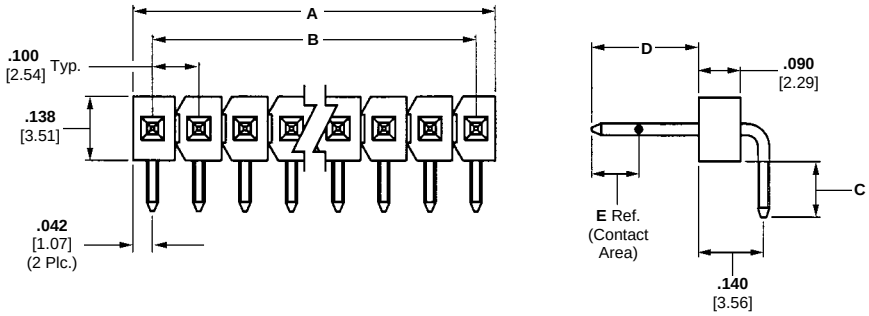

Headers with Board Retention Tails

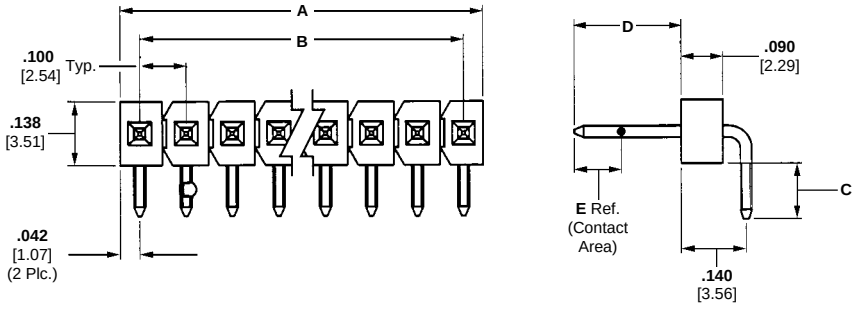

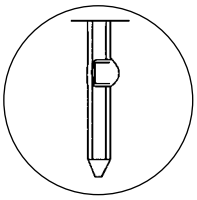

Board Retention using Swaged Tails (All Header Sizes)

Header Style	No. of Positions	Dimensions A	Dimensions B	C = .120 [3.05] D = .230 [5.84] E = .185 [4.70] Part Numbers	C = .110 [2.79] D = .318 [8.08] E = .200 [5.08] Part Numbers
With Solder Tails (See Notes 1 and 2.)	1	**.084** 2.13	—	146304-1	146305-1
	40	**3.984** 101.19	**3.900** 99.06	4-146304-0	4-146305-0
With Board Retention Tails (See Note 2.)	1	**.084** 2.13	—	146306-1	146307-1
	40	**3.984** 101.19	**3.900** 99.06	4-146306-0	4-146307-0

Notes: 1. Headers without retention tails may be broken to the desired number of positions using **Tool Kit No. 314818-1 (not shown)**.

2. Headers are also available in sizes 2 thru 39 positions (with Solder Tails) and 4 thru 39 positions (with Board Retention Tails). When ordering, add the prefix and/or suffix (dash) numbers to the base part number that corresponds with the number of positions. For example, the complete part number for an 8-position header with solder tails (C dimension .120 [3.05)] would be 146304-8. The complete part number for a 26-position header with board retention tails (C dimension .120 [3.05]) would be 2-146306-6. This part numbering system applies only to this page.

For complete product information, order Catalog 1307819

Products for Industrial & Commercial Applications

Dimensions are shown for reference purposes only.

Dimensions are in inches and millimeters unless otherwise specified. Values in brackets are metric equivalents.

Specifications subject to change.

Technical Support Center
1-800-522-6752
www.tycoelectronics.com

Breakaway Surface-Mount Compatible, High Temperature Headers–– Unshrouded, Double-Row, .100 [2.54] Centerline with Special Stand-offs

.025 [0.64] Square Straight Posts



Material and Finish:

Housing—Black thermoplastic, 94V-0 rated, high temperature compatible

Posts—Phosphor bronze, plated as follows:

Plating A—Duplex plated .000030 [0.00076] gold on contact area, .000100-.000200 [0.00254-0.00508] tin-lead on solder tail, with entire post underplated .000050 [0.00127] nickel

Plating B—Duplex plated .000015 [0.00038] gold on contact area, .000100-.000200 [0.00254-0.00508] tin-lead on solder tail, with entire post underplated .000050 [0.00127] nickel

Plating C—.000100-.000200 [0.00254-0.00508] tin-lead over .000050 [0.00127] nickel

Performance Characteristics (Board Retention Tails):

Insertion Force—12 lb [53.4N] Max.

Retention Force—.25 lb [1.11N] Min.

Related Product Data:

Mateable Connectors—Refer to the Mating Post Selection Guide (page 2045)

Technical Documents: page 2160

See mating connector for applicable product and application specifications.

Headers with Solder Tails

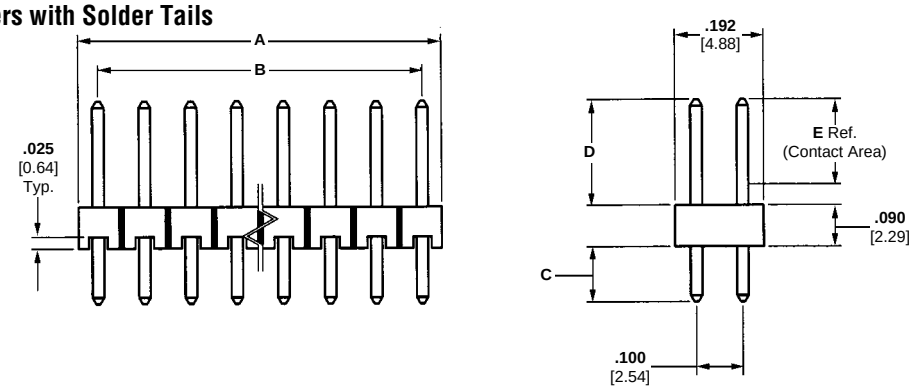

Recommended PC Board Mounting Pattern
(for .063 [1.60] thick PC board; .008 [.203] thick stencil)
*±.003 [±0.08] tolerances not to accumulate within one connector pattern.

Headers with Board Retention Tails

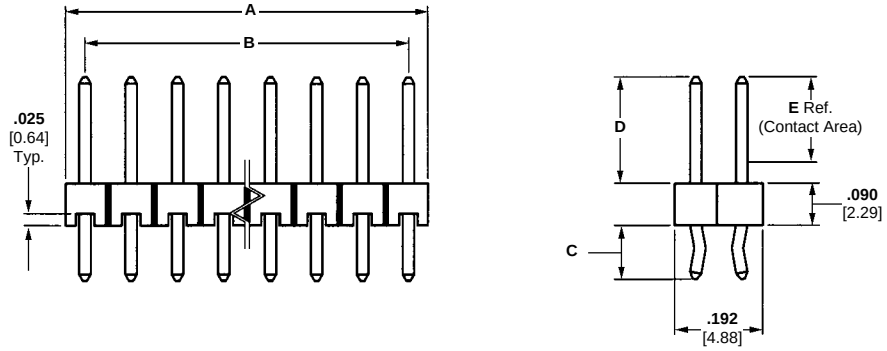

Header Style	No. of Positions	Dimensions A		Dimensions B		C = .090 [2.29] D = .230 [5.84] E = .185 [4.70] Post Plating/Part Numbers Plating A	Plating B	Plating C	C = .120 [3.05] D = .230 [5.84] E = .185 [4.70] Post Plating/Part Numbers Plating A	Plating B	Plating C	C = .125 [3.18] D = .318 [8.08] E = .200 [5.08] Post Plating/Part Numbers Plating A	Plating B	Plating C
With Solder Tails (See Notes 1 and 2.)	2	**.084**	2.13	—		146261-1	146260-1	146258-1	146257-1	146256-1	146254-1	146253-1	146252-1	146250-1
	80	**3.984**	101.19	**3.900**	99.06	4-146261-0	4-146260-0	4-146258-0	4-146257-0	4-146256-0	4-146254-0	4-146253-0	4-146252-0	4-146250-0
With Board Retention Tails (See Note 2.)	2	**.084**	2.13	—		146273-1	146272-1	146270-1	146269-1	146268-1	146266-1	146265-1	146264-1	146262-1
	80	**3.984**	101.19	**3.900**	99.06	4-146273-0	4-146272-0	4-146270-0	4-146269-0	4-146268-0	4-146266-0	4-146265-0	4-146264-0	4-146262-0

Notes: 1. Headers without retention tails may be broken to the desired number of positions using **Tool Kit No. 314818-1 (not shown)**.
2. Headers are also available in sizes 4 thru 78 positions. When ordering, add the prefix and/or suffix (dash) numbers to the base part number that corresponds with the number of positions per row. For example, the complete part number for a 16-position header with solder tails (C dimension .090 [2.29], post plating A) would be 146261-8. The complete part number for a 40-position header with board retention tails (C dimension .120 [3.05], post plating B) would be 2-146268-0. This part numbering system applies only to this page.

For complete product information, order Catalog 1307819

Products for Industrial & Commercial Applications

Dimensions are shown for reference purposes only.

Dimensions are in inches and millimeters unless otherwise specified. Values in brackets are metric equivalents.

Specifications subject to change.

Technical Support Center
1-800-522-6752
www.tycoelectronics.com

Breakaway Surface-Mount Compatible, High Temperature Headers—Unshrouded, Double-Row, .100 [2.54] Centerline

.025 [0.64] Square Right-Angle Posts



Material and Finish:

Housing—Black thermoplastic, 94V-0 rated, high temperature compatible

Posts—Phosphor bronze, duplex plated .000030 [0.00076] gold on contact area, .000100-.000200 [0.00254-0.00508] matte tin-lead on solder tail, with entire post underplated .000050 [0.00127] nickel

Performance Characteristics (Board Retention Tails):

Insertion Force—12 lb [53.4N] Max.
Retention Force—.25 lb [1.11N] Min.

Related Product Data:

Mateable Connectors—Refer to the Mating Post Selection Guide (page 2045)

Technical Documents: page 2160

See mating connector for applicable product and application specifications.

Headers with Solder Tails

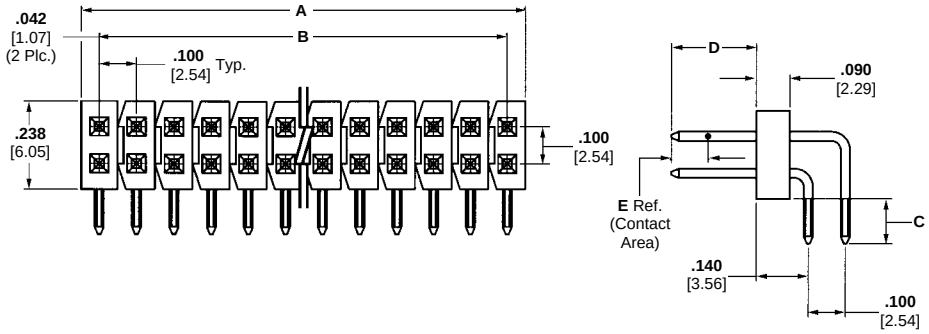

Headers with Board Retention Tails

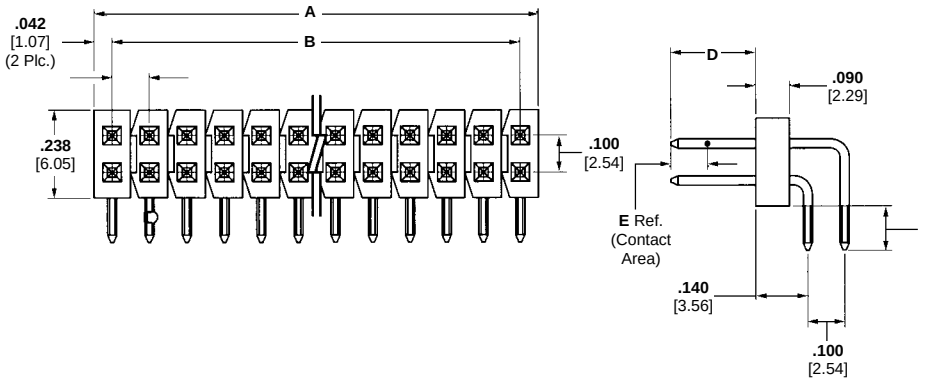

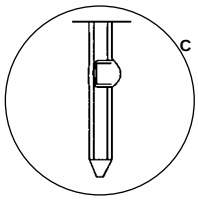

Board Retention using Swaged Tails (All Header Sizes)

Header Style	No. of Positions	Dimensions A	Dimensions B	C = .120 [3.05] D = .230 [5.84] E = .185 [4.70] Part Numbers	C = .110 [2.79] D = .318 [8.08] E = .200 [5.08] Part Numbers
With Solder Tails (See Notes 1 and 2.)	2	**.084** 2.13	—	146308-1	146309-1
	80	**3.984** 101.19	**3.900** 99.06	4-146308-0	4-146309-0
With Board Retention Tails (See Note 2.)	2	**.084** 2.13	—	146310-1	146311-1
	80	**3.984** 101.19	**3.900** 99.06	4-146310-0	4-146311-0

Notes: 1. Headers without retention tails may be broken to the desired number of positions using **Tool Kit No. 314818-1 (not shown)**.
2. Headers are also available in sizes 4 thru 78 positions. When ordering, add the prefix and/or suffix (dash) numbers to the base part number that corresponds with the number of positions per row. For example, the complete part number for a 16-position header with solder tails (C dimension .120 [3.05)] would be 146308-8. The complete part number for a 40-position header with board retention tails (C dimension .120 [3.05]) would be 2-146310-0. This part numbering system applies only to this page.

For complete product information, order Catalog 1307819

Products for Industrial & Commercial Applications
Dimensions are shown for reference purposes only.
Dimensions are in inches and millimeters unless otherwise specified. Values in brackets are metric equivalents.
Specifications subject to change.
Technical Support Center
1-800-522-6752
www.tycoelectronics.com

Breakaway Surface Mount Headers, .100 x .100 [2.54 x 2.54] Centerline

Product Facts

- **Surface Mount Leads**
- **Contact Material: phosphor bronze**
- **High temperature, black thermoplastic housings, 94V-0 rated, capable of withstanding IR or vapor-phase reflow**
- **Recognized under the Component Program of Underwriters Laboratories Inc. File No. E28476**
- **Certified by Canadian Standards Association, File No. LR 7189**
- **Choice of gold duplex or tin lead plated posts**
- **Posts coplanar within .006 [0.15]**
- **Tape and reel packaging available in addition to single tube packaging. Contact Tyco Electronics.**
- **Pick-and-place cap available for vacuum placement. Contact Tyco Electronics.**

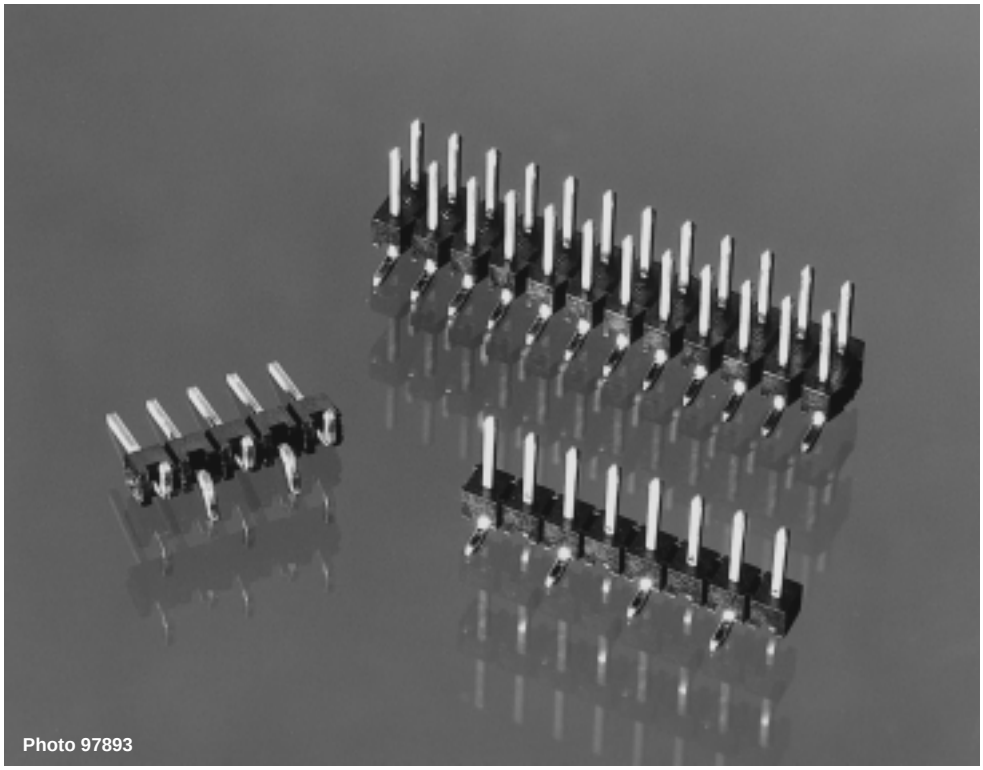

Photo 97893

An extension of the AMPMODU Breakaway Header product family is the surface mount, vertical breakaway headers. The AMPMODU surface-mount breakaway headers (Unshrouded) are available in single- and double-row vertical configurations with mating lengths of .230 [5.84] and .320 [8.13]. Posts are offered with a choice of either .000030 [.0007] gold duplex or tin lead plating.

Current packaging is in a single tube but tape and reel is available for automatic pick-and-place. We also can provide a pick-and-place cap for vacuum placement if required.

Breakaway Surface-Mount Headers—Unshrouded Single-Row, .100 [2.54] Centerline

.025 [0.64] Square Straight Post

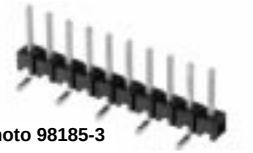

Photo 98185-3

Material and Finish:

Housing—Black thermoplastic, 94V-0 rated, high temperature compatible

Posts—Phosphor bronze, plated as follows:

Plating A—Duplex plated .000030 [0.00076] gold on contact area, .000100-.000200 [0.00254-0.00508] tin-lead on solder area, with entire post underplated .000050 [0.00127] nickel

Plating B—.000100-.000200 [0.00254-0.00508] tin-lead over .000050 [0.00127] nickel entire post

Related Product Data:

Mateable Receptacle—Refer to Mating Post Selection Guide (page 2045)

Performance Specifications—page 2101

Technical Documents: page 2160

See mating connector for applicable product and application specifications.

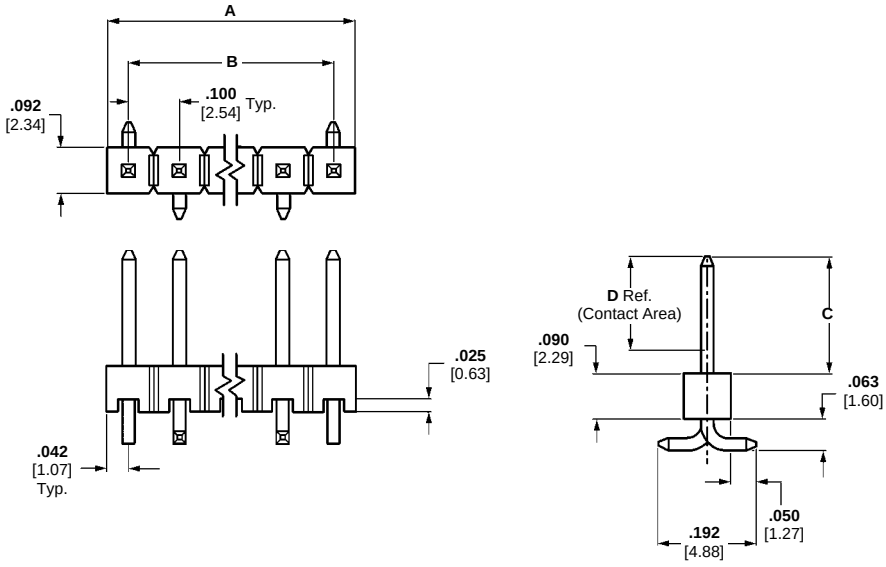

No. of Positions	Dimensions A		Dimensions B		C = .230 [5.84] D = .185 [4.70] Post Plating/Part Numbers Plating A	Plating B
3	**.284**	7.21	**.200**	5.08	146128-1	146132-1
8	**.784**	19.91	**.700**	17.78	146128-6	146132-6

Breakaway Surface-Mount Headers—Unshrouded Double-Row, .100 x .100 [2.54 x 2.54] Centerline

.025 [0.64] Square Straight Post

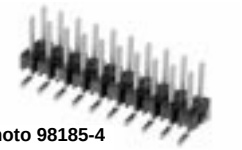

Photo 98185-4

Material and Finish:

Housing—Black thermoplastic, 94V-0 rated, high temperature compatible

Posts—Phosphor bronze, plated as follows:

Plating A—Duplex plated .000030 [0.00076] gold on contact area, .000100-.000200 [0.00254-0.00508] tin-lead on solder area, with entire post underplated .000050 [0.00127] nickel

Plating B—.000100-.000200 [0.00254-0.00508] tin-lead over .000050 [0.00127] nickel entire post

Related Product Data:

Mateable Receptacles—Refer to Mating Post Selection Guide (pages 2045)

Performance Specifications—page 2101

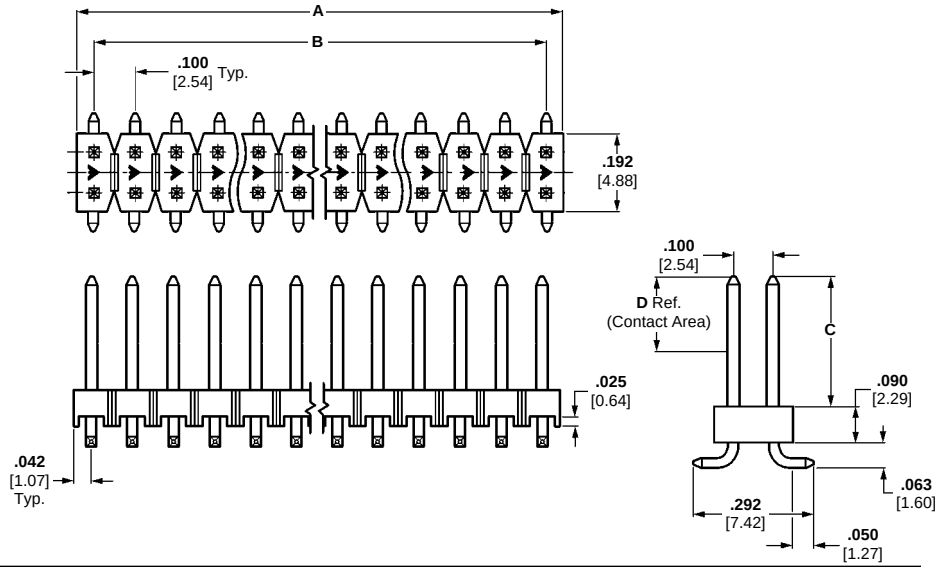

No. of Positons	Dimensions A		Dimensions B		C = .230 [5.84] D = .185 [4.70] Post Plating/Part Numbers Plating A	Plating B	C = .320 [8.13] D = .200 [5.08] Post Plating/Part Numbers Plating A
6	**.284**	7.21	**.200**	5.08	146130-2	—	—
10	**.484**	12.29	**.400**	10.16	146130-4	146134-4	146131-4
14	**.684**	17.37	**.600**	15.24	146130-6	—	—
16	**.784**	19.91	**.700**	17.78	146130-7	—	—
20	**.984**	24.99	**.900**	22.86	146130-9	—	—
30	**1.484**	37.69	**1.400**	35.56	1-146130-4	1-146134-4	—

For complete product information, order Catalog 1307819

Products for Industrial & Commercial Applications

Dimensions are shown for reference purposes only.

Dimensions are in inches and millimeters unless otherwise specified. Values in brackets are metric equivalents.

Specifications subject to change.

Technical Support Center
1-800-522-6752
www.tycoelectronics.com

Standard Profile Headers—Shrouded

Product Facts

- **Available in several styles—right-angle with three- and four-sided pin protection, and straight post with pin protection and mounting ears**
- **Post retention feature available**
- **Can be used for feed-to and feed-thru applications**
- **Housings are black thermoplastic, flame retardant 94V-0 rated**
- **Contacts are copper alloy**
- **Available in gold duplex, gold over nickel and tin-lead over nickel platings**
- **Headers with .066 [1.68] and .150 [3.81] end dimensions are available in select sizes up to 60 positions**
- **Can be select loaded, consult Tyco Electronics.**
- **Recognized under the Component Program of Underwriters Laboratories Inc. File No. E28476**
- **Certified by Canadian Standards Association, File No. LR 7189**

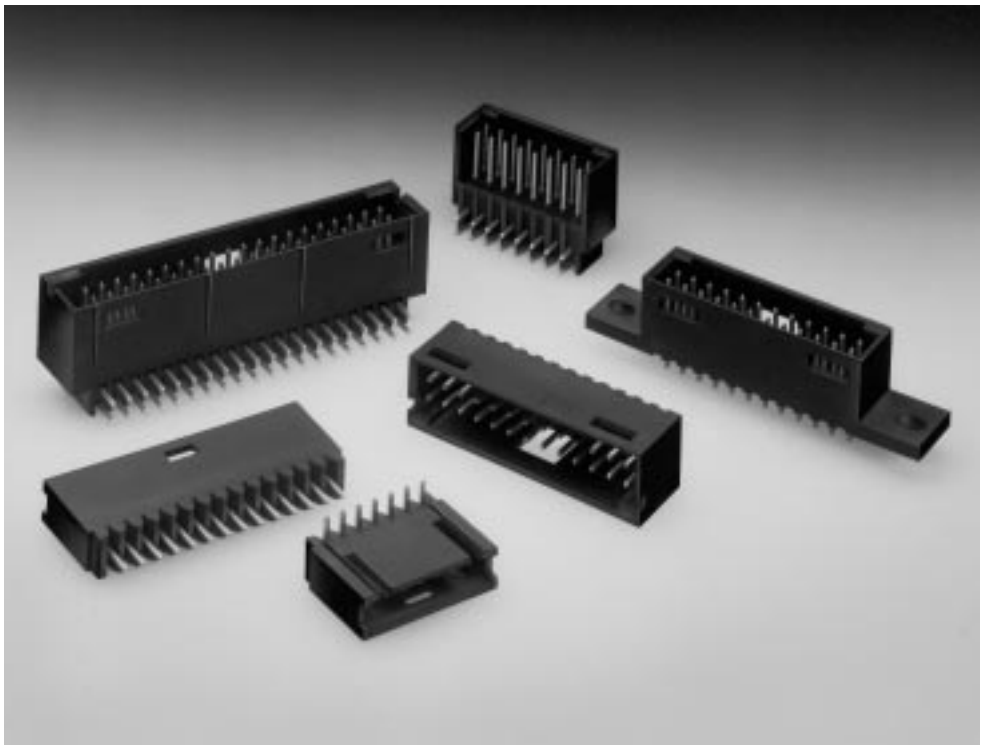

Performance Characteristics:

Electrical:

Insulation Resistance—5,000 megohms minimum initial

Dielectric Withstanding Voltage—750 RMS at sea level

Environmental:

Operating Temperature—-65°C to +105°C (black thermoplastic housings)

Current—3 amperes maximum per contact

Standard Profile Headers—Shrouded, Single-Row, .100 [2.54] Centerline

.025 [0.64] Square Straight Post (with Standoffs)



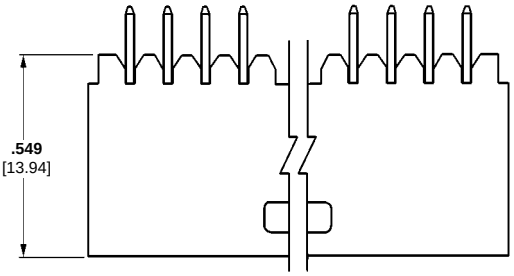

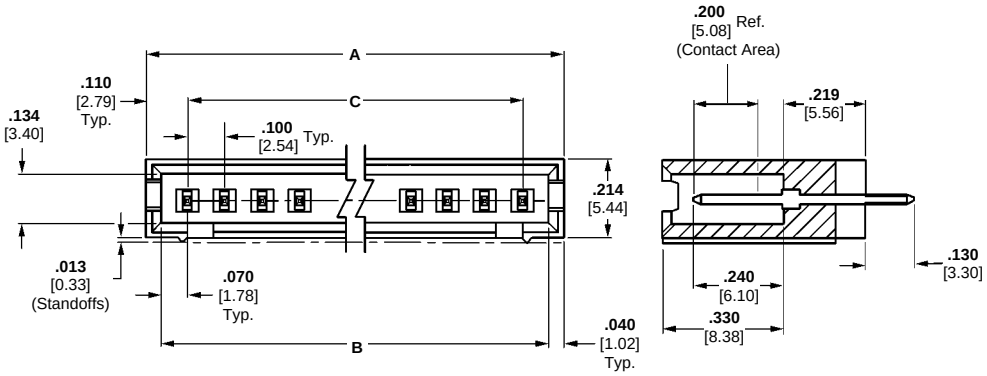

Material and Finish:

Housing—Black thermoplastic, 94V-0 rated

Posts—Copper alloy, plated as follows:

Plating A—Duplex plated .000030 [0.00076] gold on contact area, .000100-.000200 [0.00254-0.00508] tin-lead on solder area, with entire post underplated .000050 [0.00127] nickel

Plating B—Duplex plated .000015 [0.00038] gold on contact area, .000100-.000200 [0.00254-0.00508] tin-lead on solder area, with entire post underplated .000050 [0.00127] nickel

Plating C—.000100-.000200 [0.00254-0.00508] tin-lead over .000050 [0.00127] nickel on entire post

Related Product Data:

Mateable Connectors:
AMPMODU Wire-Applied Receptacles—page 2121

AMPMODU MTE Receptacles—pages 2131, 2135

Flexible Film Connectors—Catalog 82007

Technical Documents: page 2160

See mating connector for applicable product and application specifications.

No. of Positions	Dimensions			Post Plating/Part Numbers		
	A	B	C	Plating A	Plating B	Plating C
3	**.420** 10.67	**.340** 8.64	**.200** 5.08	103414-1	3-102202-4	103080-1
4	**.520** 13.21	**.440** 11.18	**.300** 7.62	103414-2	102202-1	103080-2
5	**.620** 15.75	**.540** 13.72	**.400** 10.16	103414-3	102202-2	103080-3
6	**.720** 18.29	**.640** 16.26	**.500** 12.70	103414-4	102202-3	—
7	**.820** 20.83	**.740** 18.80	**.600** 15.24	—	102202-4	103080-5
8	**.920** 23.37	**.840** 21.34	**.700** 17.78	103414-6	102202-5	103080-6
9	**1.020** 25.91	**.940** 23.88	**.800** 20.32	—	102202-6	—
10	**1.120** 28.45	**1.040** 26.42	**.900** 22.86	103414-8	102202-7	—
11	**1.220** 30.99	**1.140** 28.96	**1.000** 25.40	—	102202-8	—
12	**1.320** 33.53	**1.240** 31.50	**1.100** 27.94	1-103414-0	102202-9	1-103080-0
13	**1.420** 36.07	**1.340** 34.04	**1.200** 30.48	—	1-102202-0	—
14	**1.520** 38.61	**1.440** 36.58	**1.300** 33.02	—	1-102202-1	—
16	**1.720** 43.69	**1.640** 41.66	**1.500** 38.10	1-103414-4	1-102202-3	—
18	**1.920** 48.77	**1.840** 46.74	**1.700** 43.18	—	1-102202-5	—
20	**2.120** 53.85	**2.040** 51.82	**1.900** 48.26	1-103414-8	1-102202-7	—
24	**2.520** 64.01	**2.440** 61.98	**2.300** 58.42	2-103414-2	—	—

For complete product information, order Catalog 1307819

Products for Industrial & Commercial Applications

Dimensions are shown for reference purposes only.

Dimensions are in inches and millimeters unless otherwise specified. Values in brackets are metric equivalents.

Specifications subject to change.

Technical Support Center
1-800-522-6752
www.tycoelectronics.com

Standard Profile Headers—Shrouded, Single-Row, .100 [2.54] Centerline

.025 [0.64] Square Right-Angle Post (with Standoffs)



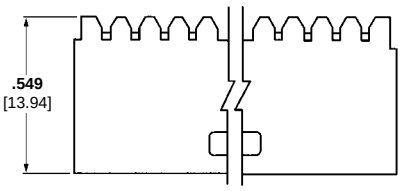

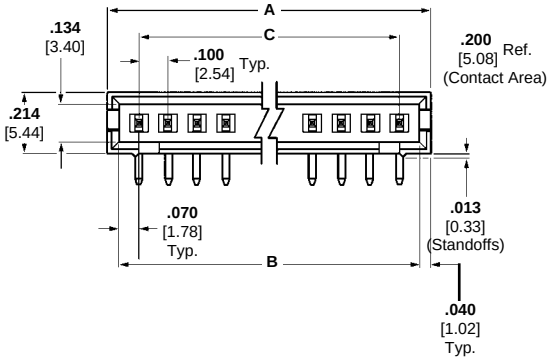

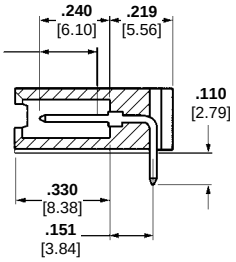

Material and Finish:

Housing—Black thermoplastic, 94V-0 rated

Posts—Copper alloy, plated as follows:

Plating A—Duplex plated .000030 [0.00076] gold on contact area, .000100-.000200 [0.00254-0.00508] tin-lead on solder area, with entire post underplated .000050 [0.00127] nickel

Plating B—Duplex plated .000015 [0.00038] gold on contact area, .000100-.000200 [0.00254-0.00508] tin-lead on solder area, with entire post underplated .000050 [0.00127] nickel

Plating C—.000100-.000200 [0.00254-0.00508] tin-lead over .000050 [0.00127] nickel on entire post

Related Product Data:

Mateable Connectors: AMPMODU Wire-Applied Receptacles—page 2121

AMPMODU MTE Receptacles—pages 2131, 2135

Flexible Film Connectors—Catalog 82007

Technical Documents: page 2160

See mating connector for applicable product and application specifications.

No. of Positions	Dimensions			Post Plating/Part Numbers		
	A	B	C	Plating A	Plating B	Plating C
3	**.420** 10.67	**.340** 8.64	**.200** 5.08	103361-1	—	—
4	**.520** 13.21	**.440** 11.18	**.300** 7.62	103361-2	102203-1	—
5	**.620** 15.75	**.540** 13.72	**.400** 10.16	103361-3	102203-2	—
6	**.720** 18.29	**.640** 16.26	**.500** 12.70	103361-4	102203-3	—
7	**.820** 20.83	**.740** 18.80	**.600** 15.24	103361-5	102203-4	—
8	**.920** 23.37	**.840** 21.34	**.700** 17.78	103361-6	102203-5	102523-6
10	**1.120** 28.45	**1.040** 26.42	**.900** 22.86	103361-8	102203-7	—
12	**1.320** 33.53	**1.240** 31.50	**1.100** 27.94	1-103361-0	102203-9	—
14	**1.520** 38.61	**1.440** 36.58	**1.300** 33.02	—	1-102203-1	—
20	**2.120** 53.85	**2.040** 51.82	**1.900** 48.26	—	1-102203-7	—
24	**2.520** 64.01	**2.440** 61.98	**2.300** 58.42	2-103361-2	—	—

For complete product information, order Catalog 1307819

Products for Industrial & Commercial Applications

Dimensions are shown for reference purposes only.

Dimensions are in inches and millimeters unless otherwise specified. Values in brackets are metric equivalents.

Specifications subject to change.

Technical Support Center
1-800-522-6752
www.tycoelectronics.com

Standard Profile Headers—Shrouded, with .066 [1.68] End Dimension, Double-Row, .100 x .100 [2.54 x 2.54] Centerline

.025 [0.64] Square Straight Post (with Detent Windows)



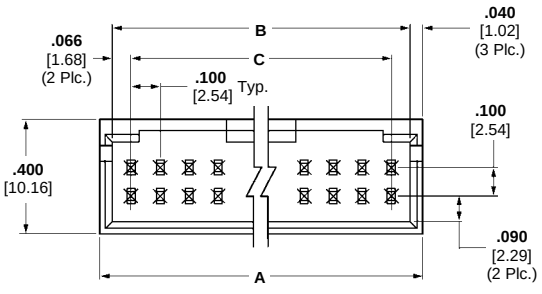

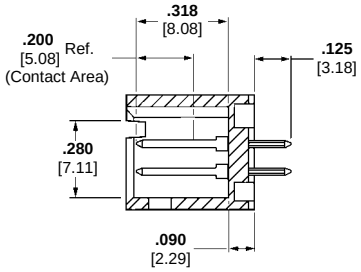

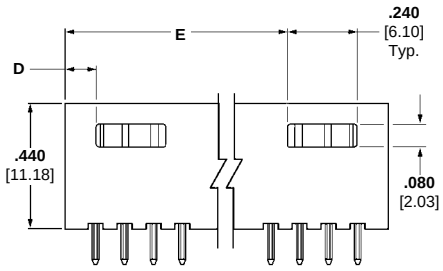

Material and Finish:

Housing—Black thermoplastic, 94V-0 rated

Posts—Copper alloy, plated as follows:

Plating A—Duplex plated .000030 [0.00076] gold on contact area, .000100-.000200 [0.00254-0.00508] tin-lead on solder area, with entire post underplated .000050 [0.00127] nickel

Plating B—Duplex plated .000015 [0.00038] gold on contact area, .000100-.000200 [0.00254-0.00508] tin-lead on solder area, with entire post underplated .000050 [0.00127] nickel

Plating C—.000100-.000200 [0.00254-0.00508] tin-lead over .000050 [0.00127] nickel on entire post

Related Product Data:

Mateable Connectors:
AMPMODU Board Mount Receptacles—pages 2093, 2096
AMPMODU Wire-Applied Receptacles—pages 2122-2124
AMPMODU MTE Receptacles—pages 2131, 2135
AMPMODU MT Receptacles—pages 2153, 2154

Accessories:

Barrier Insert—page 2114

Technical Documents: page 2160

See mating connector for applicable product and application specifications.

No. of Positions	Dimensions										Post Plating/Part Numbers		
	A		B		C		D		E		Plating A	Plating B	Plating C
6	**.412**	10.46	**.332**	8.43	**.200**	5.08	**.106**	2.69	—		103168-1	102618-1	3-87589-6
8	**.512**	13.00	**.432**	10.97	**.300**	7.62	**.106**	2.69	—		103168-2	102618-2	3-87589-5
10	**.612**	15.54	**.532**	13.51	**.400**	10.16	**.206**	5.23	—		103168-3	102618-3	87589-1
12	**.712**	18.08	**.632**	16.05	**.500**	12.70	**.206**	5.23	—		103168-4	102618-4	87589-2
14	**.812**	20.62	**.732**	18.59	**.600**	15.24	**.306**	7.77	—		103168-5	102618-5	87589-3
16	**.912**	23.16	**.832**	21.13	**.700**	17.78	**.306**	7.77	—		103168-6	102618-6	—
18	**1.012**	25.70	**.932**	23.67	**.800**	20.32	**.406**	10.31	—		103168-7	102618-7	—
20	**1.112**	28.24	**1.032**	26.21	**.900**	22.86	**.106**	2.69	**.806**	20.47	103168-8	102618-8	—
24	**1.312**	33.32	**1.232**	31.29	**1.100**	27.94	**.106**	2.69	**1.006**	25.55	1-103168-0	1-102618-0	—
26	**1.412**	35.86	**1.332**	33.83	**1.200**	30.48	**.106**	2.69	**1.106**	28.09	1-103168-1	1-102618-1	87589-9
30	**1.612**	40.94	**1.532**	38.91	**1.400**	35.56	**.106**	2.69	**1.306**	33.17	—	1-102618-3	—
32	**1.712**	43.48	**1.632**	41.45	**1.500**	38.10	**.106**	2.69	**1.406**	35.71	1-103168-4	—	—
34	**1.812**	46.02	**1.732**	43.99	**1.600**	40.64	**.106**	2.69	**1.506**	38.25	1-103168-5	1-102618-5	1-87589-3
40	**2.112**	53.64	**2.032**	51.61	**1.900**	48.26	**.106**	2.69	**1.806**	45.87	1-103168-8	1-102618-8	—
50	**2.612**	66.34	**2.532**	64.31	**2.400**	60.96	**.106**	2.69	**2.306**	58.57	2-103168-3	—	—
60	**3.112**	79.04	**3.032**	77.01	**2.900**	73.66	**.106**	2.69	**2.806**	71.27	2-103168-8	—	—

Standard Profile Headers—Shrouded, with .150 [3.81] End Dimension, Double-Row, .100 x .100 [2.54 x 2.54] Centerline

.025 [0.64] Square Straight Post (with Detent Windows)



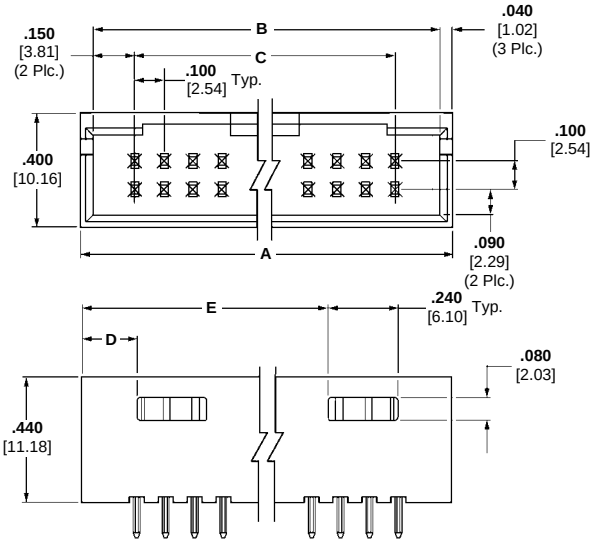

Material and Finish:

Housing—Black thermoplastic, 94V-0 rated

Posts—Copper alloy, plated as follows:

Plating A—Duplex plated .000030 [0.00076] gold on contact area, .000100-.000200 [0.00254-0.00508] tin-lead on solder area, with entire post underplated .000050 [0.00127] nickel

Plating B—Duplex plated .000015 [0.00038] gold on contact area, .000100-.000200 [0.00254-0.00508] tin-lead on solder area, with entire post underplated .000050 [0.00127] nickel

Plating C—.000100-.000200 [0.00254-0.00508] tin-lead over .000050 [0.00127] nickel on entire post

Related Product Data:

Mateable Connectors:

AMPMODU Wire-Applied Receptacles—pages 2122-2124

AMPMODU MTE Receptacles—page 2134 (used with coupling shroud on page 2139)

AMP-LATCH Connectors—Catalog 82012

Flexible Film Connectors—Catalog 82007

Ribbon Coaxial Connectors—Catalog 82158

Accessories:

Barrier Insert—page 2114

Technical Documents: page 2160

See mating connector for applicable product and application specifications.

No. of Positions	Dimensions										Post Plating/Part Numbers		
	A		B		C		D		E		Plating A	Plating B	Plating C
6	**.580**	14.73	**.500**	12.70	**.200**	5.08	**.190**	4.83	—		103169-1	—	—
8	**.680**	17.27	**.600**	15.24	**.300**	7.62	**.190**	4.83	—		103169-2	—	—
10	**.780**	19.81	**.700**	17.78	**.400**	10.16	**.290**	7.37	—		103169-3	102619-3	87587-1
12	**.880**	22.35	**.800**	20.32	**.500**	12.70	**.290**	7.37	—		103169-4	—	—
14	**.980**	24.89	**.900**	22.86	**.600**	15.24	**.390**	9.91	—		103169-5	102619-5	—
16	**1.080**	27.43	**1.000**	25.40	**.700**	17.78	**.390**	9.91	—		103169-6	102619-6	—
18	**1.180**	29.97	**1.100**	27.94	**.800**	20.32	**.490**	12.45	—		103169-7	—	—
20	**1.280**	32.51	**1.200**	30.48	**.900**	22.86	**.190**	4.83	**.890**	22.61	103169-8	102619-8	—
24	**1.480**	37.59	**1.400**	35.56	**1.100**	27.94	**.190**	4.83	**1.090**	27.69	—	1-102619-0	—
26	**1.580**	40.13	**1.500**	38.10	**1.200**	30.48	**.190**	4.83	**1.190**	30.23	1-103169-1	1-102619-1	—
34	**1.980**	50.29	**1.900**	48.26	**1.600**	40.64	**.190**	4.83	**1.590**	40.39	1-103169-5	1-102619-5	—
40	**2.280**	57.91	**2.200**	55.88	**1.900**	48.26	**.190**	4.83	**1.890**	48.01	1-103169-8	1-102619-8	—
50	**2.780**	70.61	**2.700**	68.58	**2.400**	60.96	**.190**	4.83	**2.390**	60.71	2-103169-3	2-102619-3	—

For complete product information, order Catalog 1307819

Products for Industrial & Commercial Applications

Dimensions are shown for reference purposes only.

Dimensions are in inches and millimeters unless otherwise specified. Values in brackets are metric equivalents.

Specifications subject to change.

Technical Support Center
1-800-522-6752
www.tycoelectronics.com

Standard Profile Headers—Shrouded, with .150 [3.81] End Dimension, Double-Row, .100 x .100 [2.54 x 2.54] Centerline

.025 [0.64] Square Straight Post (with Plastic Holddowns)



Photo 98185-8

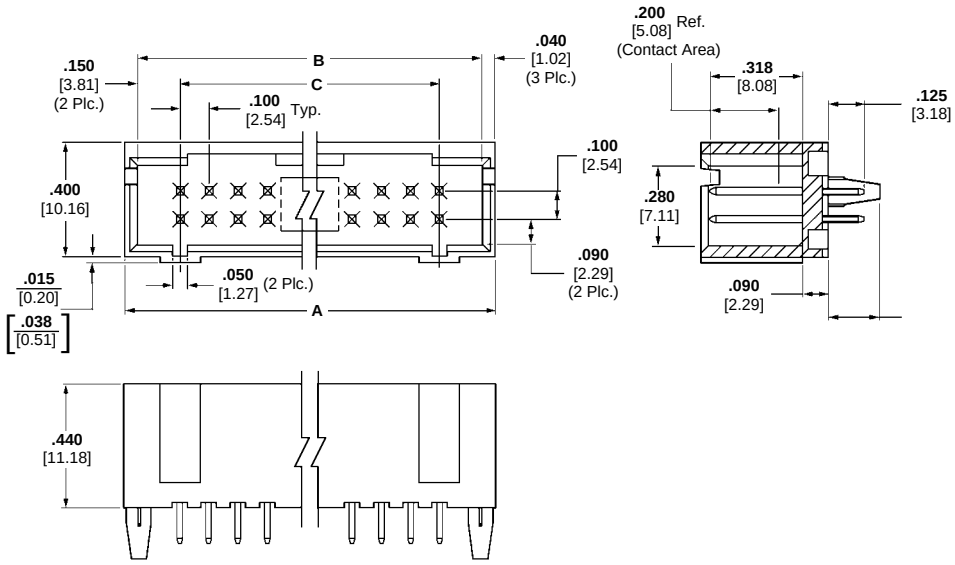

Material and Finish:

Housing—Black thermoplastic, 94V-0 rated

Posts—Copper alloy, duplex plated .000015 [0.00038] gold on contact area, .000100-.000200 [0.00254-0.00508] tin-lead on solder area, with entire post underplated .000050 [0.00127] nickel

Related Product Data:

Mateable Connectors:

AMPMODU Wire-Applied Receptacles—pages 2122, 2124

AMPMODU MTE Receptacles—page 2134 (used with coupling shroud on page 2139)

AMP-LATCH Connectors—Catalog 82012

Flexible Film Connectors—Catalog 82007

Ribbon Coaxial Connectors—Catalog 82158

Accessories:

Barrier Insert—page 2114

Technical Documents: page 2160

See mating connector for applicable product and application specifications.

No. of Positions	Dimensions			Part Numbers Plating A
	A	B	C	
16	**1.080** 27.43	**1.000** 25.40	**.700** 17.78	1-104317-6
30	**1.780** 45.21	**1.700** 43.18	**1.400** 35.56	1-104317-0
40	**2.280** 57.91	**2.200** 55.88	**1.900** 48.26	1-104317-2

For complete product information, order Catalog 1307819

Products for Industrial & Commercial Applications

Dimensions are shown for reference purposes only.

Dimensions are in inches and millimeters unless otherwise specified. Values in brackets are metric equivalents.

Specifications subject to change.

Technical Support Center
1-800-522-6752
www.tycoelectronics.com

Standard Profile Headers—Shrouded, with .066 [1.68] End Dimension, Double-Row, .100 x .100 [2.54 x 2.54] Centerline

.025 [0.64] Square Right-Angle Post (with Detent Windows)



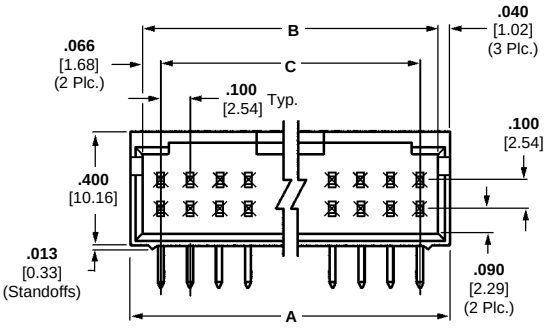

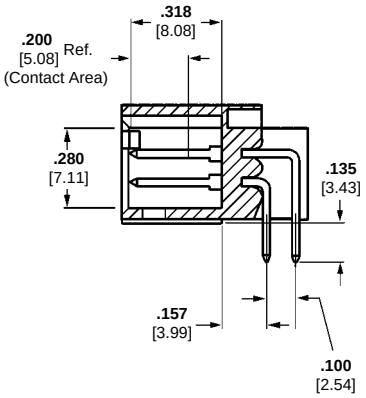

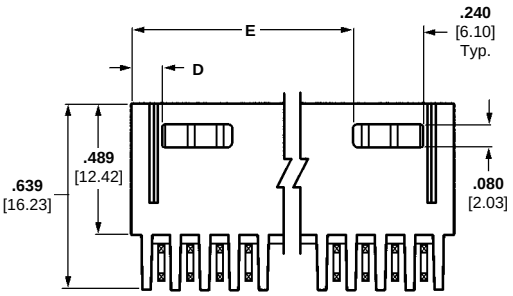

Material and Finish:

Housing—Black thermoplastic, 94V-0 rated

Posts—Copper alloy, plated as follows:

Plating A—Duplex plated .000030 [0.00076] gold on contact area, .000100-.000200 [0.00254-0.00508] tin-lead on solder area, with entire post underplated .000050 [0.00127] nickel

Plating B—Duplex plated .000015 [0.00038] gold on contact area, .000100-.000200 [0.00254-0.00508] tin-lead on solder area, with entire post underplated .000050 [0.00127] nickel

Plating C—.000100-.000200 [0.00254-0.00508] tin-lead over .000050 [0.00127] nickel on entire post

Related Product Data:

Mateable Connectors:

AMPMODU Board Mount Receptacles—pages 2093, 2096

AMPMODU Wire-Applied Receptacles—pages 2122-2124

AMPMODU MTE Receptacles—pages 2131, 2135

AMPMODU MT Receptacles—pages 2153, 2154

Technical Documents: page 2160

See mating connector for applicable product and application specifications.

No. of Positions	Dimensions								Post Plating/Part Numbers		
	A		B		C		D		E		Plating A	Plating B	Plating C
6	**.412**	10.46	**.332**	8.43	**.200**	5.08	**.106**	2.69	—		103166-1	102617-1	—
8	**.512**	13.00	**.432**	10.97	**.300**	7.62	**.106**	2.69	—		103166-2	102617-2	—
10	**.612**	15.54	**.532**	13.51	**.400**	10.16	**.206**	5.23	—		103166-3	102617-3	87579-2
12	**.712**	18.08	**.632**	16.05	**.500**	12.70	**.206**	5.23	—		103166-4	102617-4	—
14	**.812**	20.62	**.732**	18.59	**.600**	15.24	**.306**	7.77	—		103166-5	102617-5	—
16	**.912**	23.16	**.832**	21.13	**.700**	17.78	**.306**	7.77	—		103166-6	102617-6	—
20	**1.112**	28.24	**1.032**	26.21	**.900**	22.86	**.106**	2.69	**.806**	20.47	103166-8	102617-8	—
24	**1.312**	33.32	**1.232**	31.29	**1.100**	27.94	**.106**	2.69	**1.006**	25.55	1-103166-0	1-102617-0	—
26	**1.412**	35.86	**1.332**	33.83	**1.200**	30.48	**.106**	2.69	**1.106**	28.09	1-103166-1	1-102617-1	—
30	**1.612**	40.94	**1.532**	38.91	**1.400**	35.56	**.106**	2.69	**1.306**	33.17	1-103166-3	1-102617-3	—
34	**1.812**	46.02	**1.732**	43.99	**1.600**	40.64	**.106**	2.69	**1.506**	38.25	1-103166-5	—	—
40	**2.112**	53.64	**2.032**	51.61	**1.900**	48.26	**.106**	2.69	**1.806**	45.87	1-103166-8	—	—
50	**2.612**	66.34	**2.532**	64.31	**2.400**	60.96	**.106**	2.69	**2.306**	58.57	—	2-102617-3	—

For complete product information, order Catalog 1307819

Products for Industrial & Commercial Applications

Dimensions are shown for reference purposes only.

Dimensions are in inches and millimeters unless otherwise specified. Values in brackets are metric equivalents.

Specifications subject to change.

Technical Support Center
1-800-522-6752
www.tycoelectronics.com

Standard Profile Headers—Shrouded, with .150 [3.81] End Dimension, Double-Row, .100 x .100 [2.54 x 2.54] Centerline

.025 [0.64] Square Right-Angle Post (with Detent Windows)



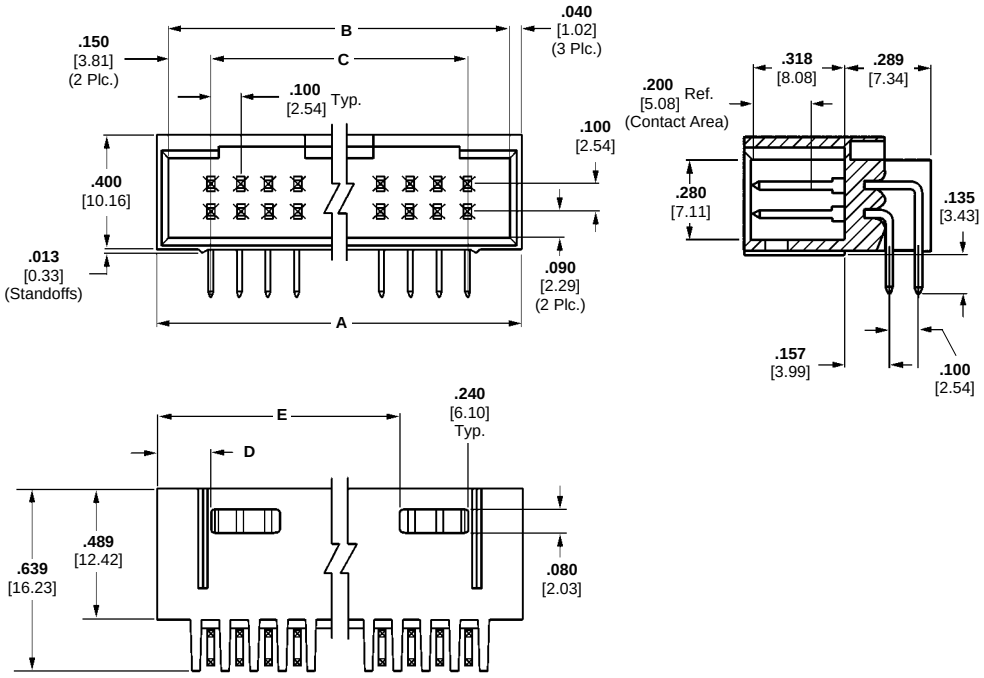

Material and Finish:

Housing—Black thermoplastic, 94V-0 rated

Posts—Copper alloy, plated as follows:

Plating A—Duplex plated .000030 [0.00076] gold on contact area, .000100-.000200 [0.00254-0.00508] tin-lead on solder area, with entire post underplated .000050 [0.00127] nickel

Plating B—Duplex plated .000015 [0.00038] gold on contact area, .000100-.000200 [0.00254-0.00508] tin-lead on solder area, with entire post underplated .000050 [0.00127] nickel

Related Product Data:

Mateable Connectors:

AMPMODU Wire-Applied Receptacles—pages 2122, 2124

AMPMODU MTE Receptacles—page 2134 (used with coupling shroud on page 2139)

AMP-LATCH Connectors—Catalog 82012

Flexible Film Connectors—Catalog 82007

Ribbon Coaxial Connectors—Catalog 82158

Technical Documents: page 2160

See mating connector for applicable product and application specifications.

No. of Positions	Dimensions					Post Plating/Part Numbers	
	A	B	C	D	E	Plating A	Plating B
8	**.680** 17.27	**.600** 15.24	**.300** 7.62	**.190** 4.83	—	103167-1	—
10	**.780** 19.81	**.700** 17.78	**.400** 10.16	**.290** 7.37	—	103167-2	102570-3
12	**.880** 22.35	**.800** 20.32	**.500** 12.70	**.290** 7.37	—	103167-3	—
16	**1.080** 27.43	**1.000** 25.40	**.700** 17.78	**.390** 9.91	—	103167-5	—
20	**1.280** 32.51	**1.200** 30.48	**.900** 22.86	**.190** 4.83	**.890** 22.61	103167-7	102570-8
24	**1.480** 37.59	**1.400** 35.56	**1.100** 27.94	**.190** 4.83	**1.090** 27.69	—	1-102570-0
26	**1.580** 40.13	**1.500** 38.10	**1.200** 30.48	**.190** 4.83	**1.190** 30.23	1-103167-0	1-102570-1
34	**1.980** 50.29	**1.900** 48.26	**1.600** 40.64	**.190** 4.83	**1.590** 40.39	1-103167-4	1-102570-5
40	**2.280** 57.91	**2.200** 55.88	**1.900** 48.26	**.190** 4.83	**1.890** 48.01	1-103167-7	102570-1

Standard Profile Headers—Shrouded, with .066 [1.68] End Dimension, Double-Row, .100 x .100 [2.54 x 2.54] Centerline

.025 [0.64] Square Right-Angle Post (with Pin Protection on 3 Sides)



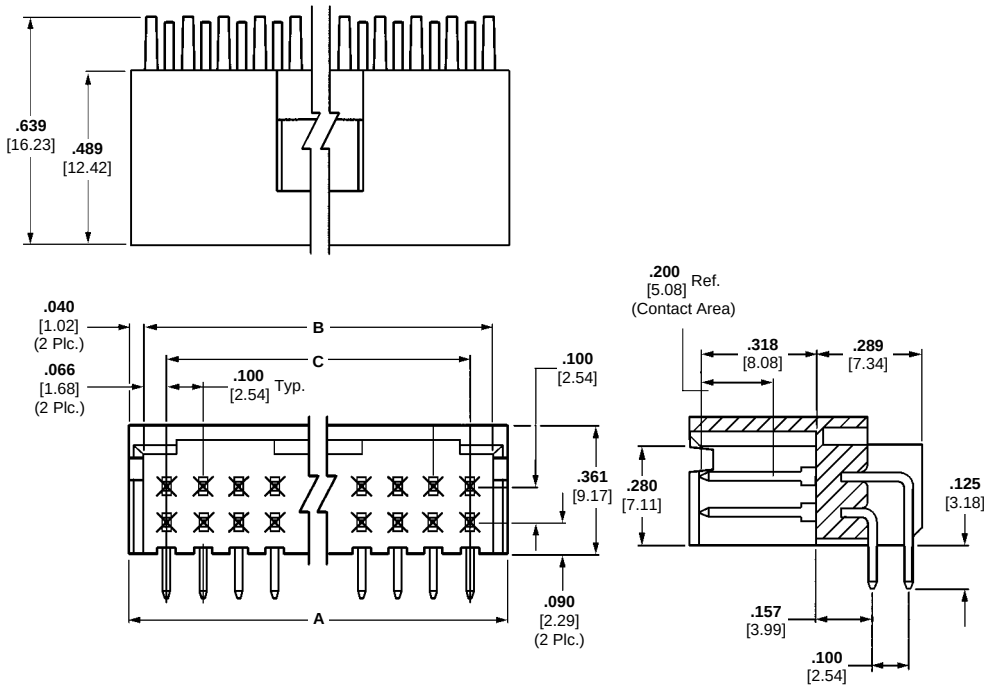

Material and Finish:

Housing—Black thermoplastic, 94V-0 rated

Posts—Copper alloy, plated as follows:

Plating A—Duplex plated .000030 [0.00076] gold on contact area, .000100-.000200 [0.00254-0.00508] tin-lead on solder area, with entire post underplated .000050 [0.00127] nickel

Related Product Data:

Mateable Connectors:

AMPMODU Board Mount Receptacles—pages 2093, 2096

AMPMODU Wire-Applied Receptacles—pages 2122, 2124

AMPMODU MTE Receptacles—pages 2131, 2135

AMPMODU MT Receptacles—pages 2153, 2154

Technical Documents: page 2160

See mating connector for applicable product and application specifications.

No. of Positions	Dimensions A	B	C	Post Plating/Part Numbers Plating A
8	**.512** 13.00	**.432** 10.97	**.300** 7.62	103164-2
10	**.612** 15.54	**.532** 13.51	**.400** 10.16	103164-3
12	**.712** 18.08	**.632** 16.05	**.500** 12.70	103164-4
16	**.912** 23.16	**.832** 21.13	**.700** 17.78	103164-6
20	**1.112** 28.24	**1.032** 26.21	**.900** 22.86	103164-8

For complete product information, order Catalog 1307819

Products for Industrial & Commercial Applications

Dimensions are shown for reference purposes only.

Dimensions are in inches and millimeters unless otherwise specified. Values in brackets are metric equivalents.

Specifications subject to change.

Technical Support Center
1-800-522-6752
www.tycoelectronics.com

Standard Profile Headers—Shrouded, with .150 [3.81] End Dimension, Double-Row, .100 x .100 [2.54 x 2.54] Centerline

.025 [0.64] Square Right-Angle Post (with Plastic Holddowns)



Photo 98185-9

Material and Finish:

Housing—Black thermoplastic, 94V-0 rated

Posts—Copper alloy, duplex plated .000015 [0.00038] gold on contact area, .000100-.000200 [0.00254-0.00508] tin-lead on solder area, with entire post underplated .000050 [0.00127] nickel

Related Product Data:

Mateable Connectors:

AMPMODU Wire-Applied Receptacles—pages 2122, 2124

AMPMODU MTE Receptacles—page 2134 (used with coupling shroud on page 2139)

AMP-LATCH Connectors—Catalog 82012

Flexible Film Connectors—Catalog 82007

Ribbon Coaxial Connectors—Catalog 82158

Technical Documents: page 2160

See mating connector for applicable product and application specifications.

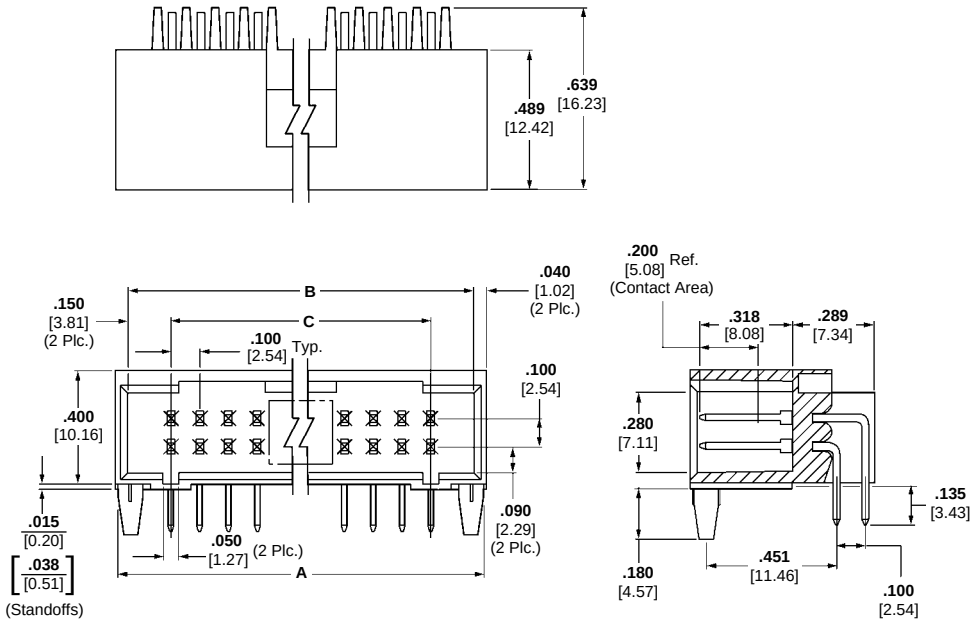

No. of Positions	Dimensions			Part Numbers
	A	B	C	
10	**.780** 19.81	**.700** 17.78	**.400** 10.16	104319-7
20	**1.280** 32.51	**1.200** 30.48	**.900** 20.86	104319-2

Standard Profile Headers—Shrouded, with .150 [3.81] End Dimension, Double-Row, .100 x .100 [2.54 x 2.54] Centerline

.025 [0.64] Square Straight Post (with Detent Windows and Mounting Ears)



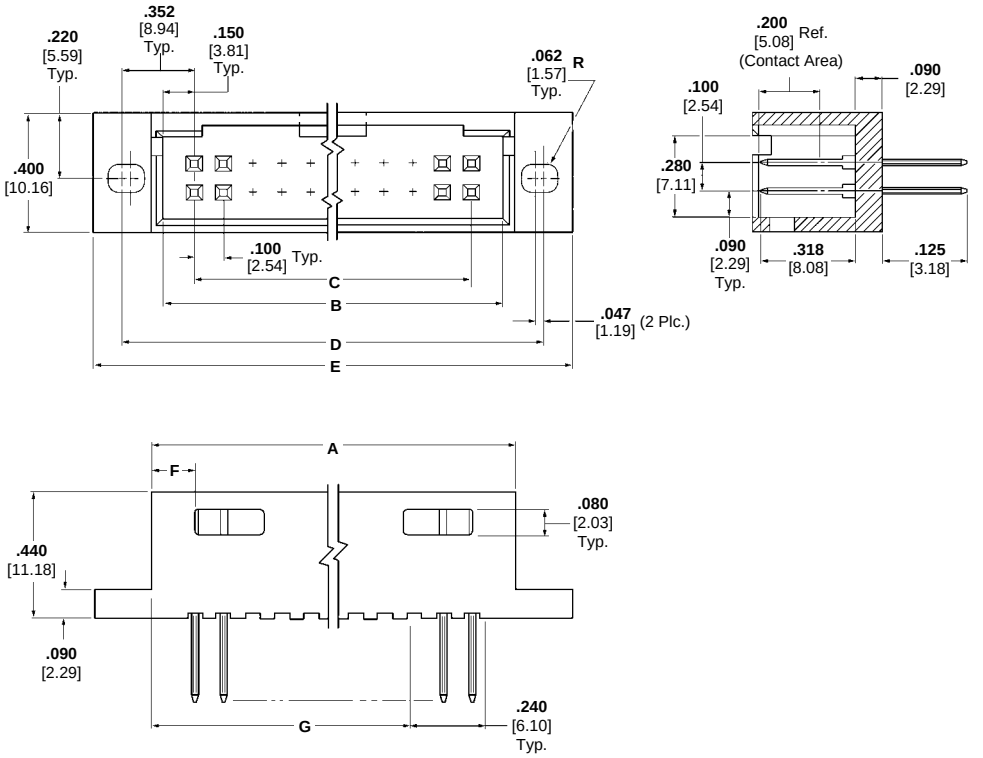

Material and Finish:

Housing—Black thermoplastic, 94V-0 rated

Posts—Copper alloy, plated .000030 [0.00076] gold over .000050 [0.00127] nickel on entire post

Related Product Data:

Mateable Connectors:

AMPMODU Wire-Applied Receptacles—pages 2122, 2124

AMPMODU MTE Receptacles—pages 2134 (used with coupling shroud on page 2139)

AMP-LATCH Connectors—Catalog 82012

Flexible Film Connectors—Catalog 82007

Ribbon Coaxial Connectors—Catalog 82158

Accessories:

Barrier Insert—page 2114

Technical Documents: page 2160

See mating connector for applicable product and application specifications.

No. of Positions	Dimensions							Part Numbers
	A	B	C	D	E	F	G	
10	**.780** 19.81	**.700** 17.78	**.400** 10.16	**1.104** 28.04	**1.304** 33.12	**.290** 7.37	—	87474-1
20	**1.280** 32.51	**1.200** 30.48	**.900** 22.86	**1.604** 40.74	**1.804** 45.82	**.190** 4.83	**.890** 22.61	87474-2

For complete product information, order Catalog 1307819

Products for Industrial & Commercial Applications

Dimensions are shown for reference purposes only.

Dimensions are in inches and millimeters unless otherwise specified. Values in brackets are metric equivalents.

Specifications subject to change.

Technical Support Center
1-800-522-6752
www.tycoelectronics.com

ACTION PIN Headers—Shrouded and Unshrouded

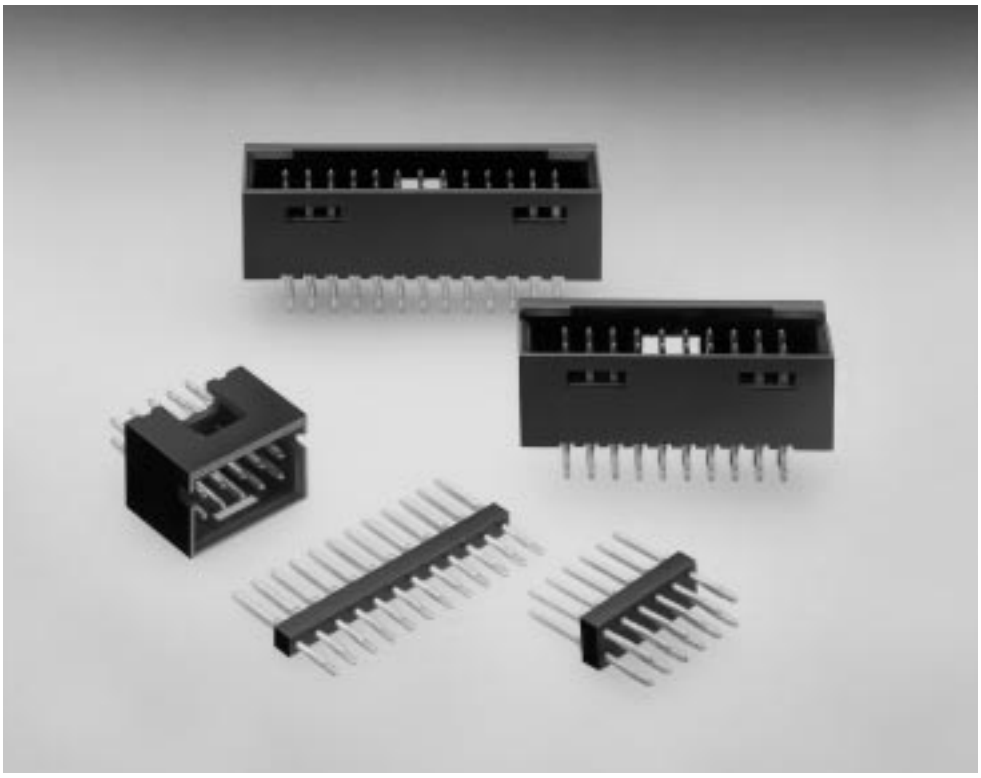

Product Facts

- Straight posted unshrouded and shrouded versions
- .025 [0.64] square ACTION PIN posts
- Compatible with high temperature surface-mount applications, with press-fit ACTION PIN post insertion after reflow process
- ACTION PIN posts make a gas-tight, press-fit connection in plated-through holes
- Does not damage plated-through holes
- Unshrouded headers available in selected sizes 1 through 40 positions (single-row) and 4 through 80 positions (double-row)
- Shrouded headers (double-row) available in selected sizes of 6 through 60 positions
- Flame retardant, black thermoplastic housings, 94V-0 rated
- Available in .100 [2.54] Centerline spacing in an insulator header that is directly mounted on a printed circuit board
- Recognized under the Component Program of Underwriters Laboratories Inc., File No. E28476
- Certified by Canadian Standards Association, File No. LR 16455

ACTION PIN Headers—Unshrouded, Single-Row, .100 [2.54] Centerline

.025 [0.64] Square Straight Post

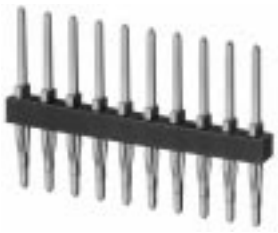

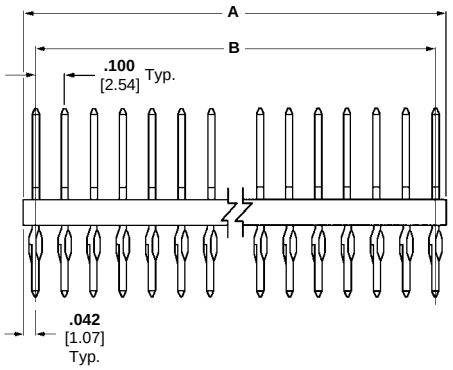

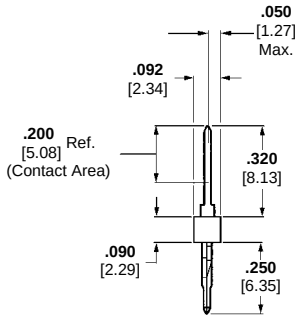

Material and Finish:

Housing—Black thermoplastic, 94V-0 rated, high temperature compatible

Posts—Copper alloy, duplex plated .000030 [0.00076] gold on contact area, .000100-.000200 [0.00254-0.00508] bright tin-lead on termination end, with entire post underplated .000050 [0.00127] nickel

Related Product Data:

Mateable Connectors—Refer to the Mating Post Selection Guide (page 2045)

Application Tooling—page 2086

Technical Documents: page 2160

See mating connector for applicable product and application specifications

No. of Positions	Dimensions A	Dimensions B	Part Numbers For .093-.125 [.236-3.18] Thick PC Boards
2	**.184** 4.67	**.100** 2.54	3-102898-4
3	**.284** 7.21	**.200** 5.08	4-102898-0
5	**.484** 12.29	**.400** 10.16	3-102898-8
8	**.784** 19.91	**.700** 17.78	102898-1

Note: To insert header into PC board, use seating tool with arbor tool or air powered machine—page 2086.

For complete product information, order Catalog 1307819

Products for Industrial & Commercial Applications

Dimensions are shown for reference purposes only.

Dimensions are in inches and millimeters unless otherwise specified. Values in brackets are metric equivalents.

Specifications subject to change.

Technical Support Center
1-800-522-6752
www.tycoelectronics.com

ACTION PIN Headers—Unshrouded, Double-Row, .100 x .100 [2.54 x 2.54] Centerline

.025 [0.64] Square Straight Post



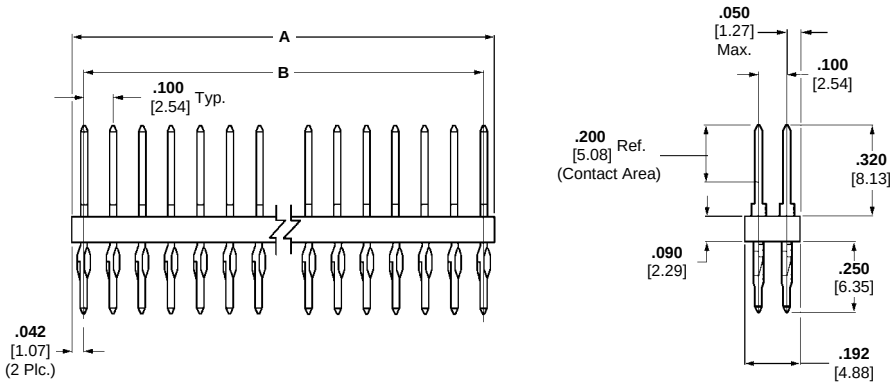

Material and Finish:

Housing—Black thermoplastic, 94V-0 rated, high temperature compatible

Posts—Copper alloy, duplex plated .000030 [0.00076] gold on contact area, .000100-.000200 [0.00254-0.00508] bright tin-lead on termination end, with entire post underplated .000050 [0.00127] nickel

Related Product Data:

Mateable Connectors—Refer to the Mating Post Selection Guide (page 2045)

Application Tooling—page 2087

Accessories:

Barrier Insert—page 2114

Technical Documents: page 2160

See mating connector for applicable product and application specifications

No. of Positions	Dimensions A	Dimensions B	Part Numbers For .093-.125 [.236-3.18] Thick PC Boards
4	**.184** 4.67	**.100** 2.54	103233-1
8	**.384** 9.75	**.300** 7.62	103233-3
10	**.484** 12.29	**.400** 10.16	103233-4
16	**.784** 19.91	**.700** 17.78	103233-7
18	**.884** 22.45	**.800** 20.32	103233-8
22	**1.084** 27.53	**1.000** 25.40	1-103233-0
24	**1.184** 30.07	**1.100** 27.94	1-103233-1
26	**1.284** 32.61	**1.200** 30.48	1-103233-2
34	**1.684** 42.77	**1.600** 40.64	1-103233-6
40	**1.984** 50.39	**1.900** 48.26	1-103233-9
60	**2.984** 75.79	**2.900** 73.66	2-103233-9

For complete product information, order Catalog 1307819

Products for Industrial & Commercial Applications

Dimensions are shown for reference purposes only.

Dimensions are in inches and millimeters unless otherwise specified. Values in brackets are metric equivalents.

Specifications subject to change.

Technical Support Center
1-800-522-6752
www.tycoelectronics.com

ACTION PIN Headers—Shrouded with .066 [1.68] End Dimension, Double-Row, .100 x .100 [2.54 x 2.54] Centerline

.025 [0.64] Square Straight Post (with Detent Windows, for .093-.125 [.236-3.18] Thick PC Board)



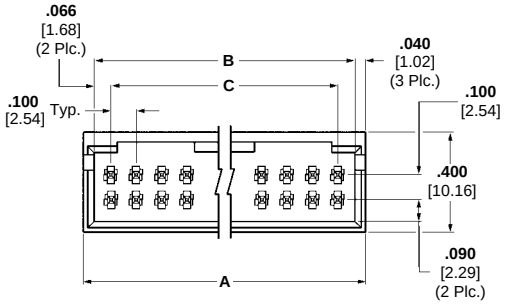

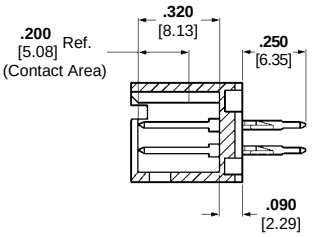

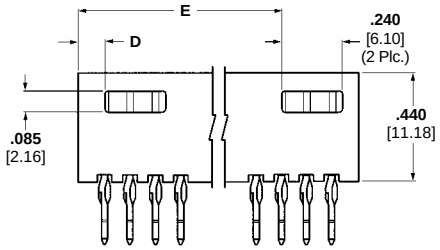

Material and Finish:

Housing—Black thermoplastic, 94V-0 rated, high temperature compatible

Posts—Copper alloy, duplex plated .000030 [0.00076] gold on contact area, .000100-.000200 [0.00254-0.00508] bright tin-lead on termination end, with entire post underplated .000050 [0.00127] nickel

Related Product Data:

Mateable Connectors:

AMPMODU Board Mount Receptacles—pages 2093, 2096

AMPMODU Wire-Applied Receptacles—pages 2123, 2124

AMPMODU MT Receptacles—pages 2153, 2154

Application Tooling—page 2087

Accessories:

Barrier Insert—page 2114

Technical Documents: page 2160

See mating connector for applicable product and application specifications

No. of Positions	Dimensions					Header Part Numbers
	A	B	C	D	E	
6	**.412** 10.46	**.332** 8.43	**.200** 5.08	**.106** 2.69	—	102699-2
8	**.512** 13.00	**.432** 10.97	**.300** 7.62	**.106** 2.69	—	102699-3
10	**.612** 15.54	**.532** 13.51	**.400** 10.16	**.206** 5.23	—	102699-4
12	**.712** 18.08	**.632** 16.05	**.500** 12.70	**.206** 5.23	—	102699-5
14	**.812** 20.62	**.732** 18.59	**.600** 15.24	**.306** 7.77	—	102699-6
20	**1.112** 28.24	**1.032** 26.21	**.900** 22.86	**.106** 2.69	**.806** 20.47	102699-9
26	**1.412** 35.86	**1.332** 33.83	**1.200** 30.48	**.106** 2.69	**1.106** 28.09	1-102699-2

ACTION PIN Headers—Shrouded with .150 [3.81] End Dimension, Double-Row, .100 x .100 [2.54 x 2.54] Centerline

.025 [0.64] Square Straight Post (with Detent Windows, for .093-.125 [.236-3.18] Thick PC Board)



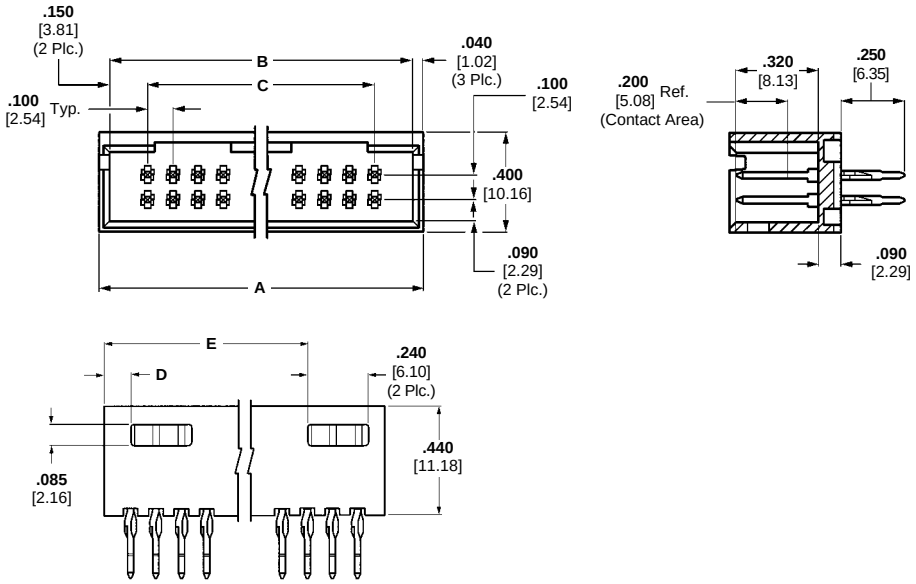

Material and Finish:

Housing—Black thermoplastic, 94V-0 rated, high temperature compatible

Posts—Copper alloy, duplex plated .000030 [0.00076] gold on contact area, .000100-.000200 [0.00254-0.00508] bright tin-lead on termination end, with entire post underplated .000050 [0.00127] nickel

Related Product Data:

Mateable Connectors:

AMPMODU Wire-Applied Receptacles—pages 2123, 2124

AMPMODU MTE Receptacles—page 2134

Flexible Film Connectors—Catalog 82007

Application Tooling—page 2087

Accessories:

Barrier Insert—Page 2114

Technical Documents: page 2160

See mating connector for applicable product and application specifications

No. of Positions	Dimensions								Header Part Numbers
	A		B		C		D	E	
10	**.780**	19.81	**.700**	17.78	**.400**	10.16	**.290** 7.37	—	102557-9
20	**1.280**	32.51	**1.200**	30.48	**.900**	22.86	**.190** 4.83	**.890** 22.61	102557-2
26	**1.580**	40.13	**1.500**	38.10	**1.200**	30.48	**.190** 4.83	**1.190** 30.23	102557-3
40	**2.280**	57.91	**2.200**	55.88	**1.900**	48.26	**.190** 4.83	**1.890** 48.01	102557-1
50	**2.780**	70.61	**2.700**	68.58	**2.400**	60.96	**.190** 4.83	**2.390** 60.71	102557-6

Application Tooling for AMPMODU Headers with ACTION PIN Posts

ACTION PIN Post Replacement Tooling



Rear Insertion/Extraction Tool No. 265871-7 (Ref. 408-2036)
Includes:
Impact Tool No. 380392-8
Removal Tool No. 265964-1
Replacement Tip No. 308554-1

Pin headers with ACTION PIN posts allow high speed, solderless back-plane construction through reliable press-fit application. Press fitting connectors to printed circuit boards requires special seating tools which transfer application force directly to the contacts.

Force applied to the tool to seat the connectors can be provided by the AMP seating machines shown on this page, or by commercially available arbor presses such as Greenerd 3A or 3B. The selected press must have a seating pressure capacity of 40 lb. [178 N] per contact.

For tooling information, call the Technical Support Center 1-800-522-6752.

Single-Row Connector Seating Tools

Tooling Assembly No. 91171-1 is used to install single-row AMPMODU headers with ACTION PIN posts into PC boards.

Double-Row Connector Seating Tools

Header Size (Number of Positions)	Tool Assembly Numbers
4	91170-1
6	91170-1
8	91170-2
12	91170-5
14	91170-6
16	91170-7
20	91170-9
24	1-91170-1
30	1-91170-4
36	1-91170-7
40	1-91170-9
50	2-91170-4
60	2-91170-9
80	3-91170-2
96	3-91170-5
100	3-91170-6
120	3-91170-8
140	4-91170-0
200	4-91170-2

Triple-Row Connector Seating Tools

Header Size (Number of Positions)	Tool Assembly Numbers
96	91169-8
105	91169-6
120	91169-7
150	91169-3
195	91169-2
204	91169-1
210	91169-5
300	91169-9

SM-10/20 Machine No. 803880-6

This machine is hydraulically operated with a capacity of 40,000 lb. [178,000 N]. Each contact requires 40 lb. [178 N] for insertion. Cycling time is 2 to $2^1/_2$ seconds. All connectors in this catalog are compatible with the SM-10/20 machine.



SM-3 Machine No. 814700-2

This machine is air powered with a capacity of 6,000 lb. [26,700 N]. Each contact requires 40 lb. [178 N] for insertion. It utilizes .750 [19.05] thick board support fixtures and has adjustable seating force. It also has a board sensing feature to compensate for board thickness variations. The machine has the capability of processing boards up to 20 [508] wide and all but the largest connectors. Connectors up to 150 positions can be seated using the SM-3 machine. Cycling time is 4 seconds.



For complete product information, order Catalog 1307819

Application Tooling for Post Insertion

Comp-U-Sertor II Insertion Machine No. 122300-1

This machine has a compact, microprocessor-controlled X-Y positioning table for inserting a variety of AMP posts, sockets and receptacles at rates up to 14,000 contacts per hour. It is programmed and operated with an easy-to-use, menu-driven touchscreen. Programs are stored in a battery-backed Random Access Memory. A 3.5" floppy disk drive is provided for off-line programming and storage. Insertion heads are interchangeable. The insertable area is 12 x 18 [305 x 457]. The power requirement is 120 VAC, 50-60 Hz, 7 A; the air requirement is 90 psi [6.21 bar] at 2-15 scfm [0.00094-0.00708 m^3/s], depending upon application.

For further information, request AMP Customer Manual 409-5863.



Photo 96187-1

Modular Insertion System Bench Machine No. 217600-1

This machine uses AMP insertion heads to install a variety of printed circuit board products at rates of 2,000 per hour. The printed circuit board is placed in a Board Holding Fixture which is attached to a two-hand controlled mechanism. The operator moves the board over the machine anvil; a switch in the anvil actuates the machine when the printed circuit board is placed on the anvil. A spotlight illuminates the insertion area.

Consult AMP for further information on this machine and the insertion heads.



Photo 98731

Receptacle Assemblies, Horizontal Mount

Product Facts

- **All receptacle assemblies are end stackable**
- **Contact design employs dual cantilever beams with built-in anti-overstress feature**
- **Closed entry housings help prevent post stubbing**
- **Wide range of sizes available**
- **Other versions available upon request**
- **Housings made of high temperature, surface mount compatible thermoplastic material, 94V-O rated**
- **Duplex gold and bright tin-lead plated contacts have full nickel underplate**
- **Housings feature PC board standoffs**
- **Solder tails accommodate a PC board thickness of .062 [1.57]**
- **Recognized under the Component Program of Underwriters Laboratories Inc., File No. E28476**
- **Certified by Canadian Standards Association, File No. LR 7189**

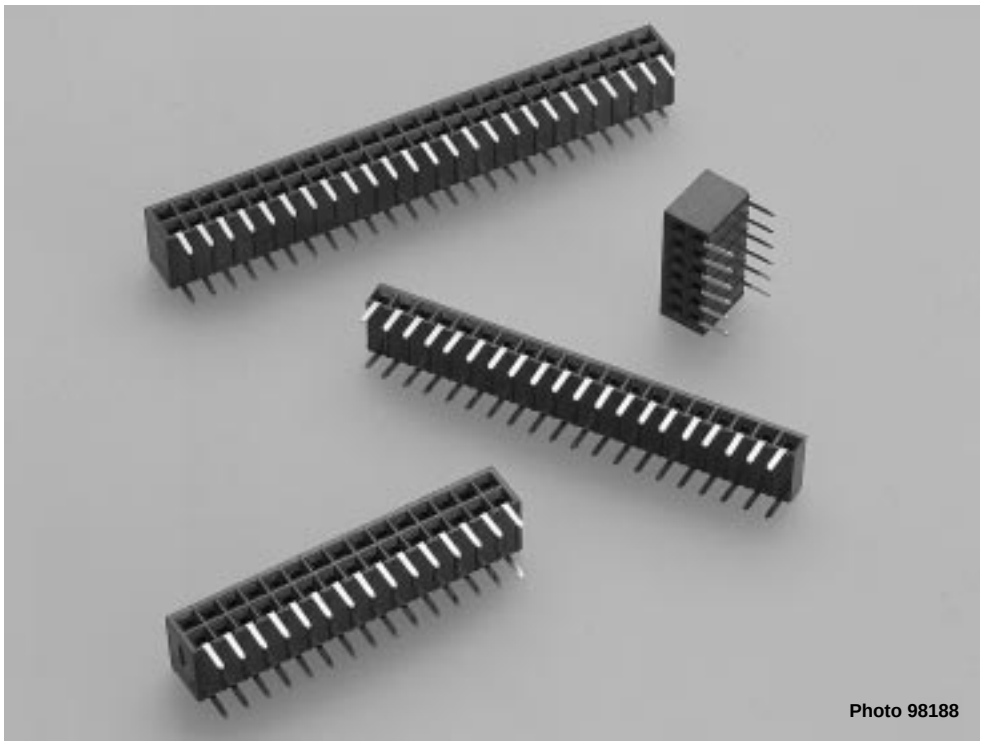

Photo 98188

Horizontal Mount receptacle assemblies are designed to reliably and economically meet the packaging and interconnection requirements of today's electronics industry, generally for applications using the mother/daughter board arrangement.

This product line is offered in both single and double row configurations. The .100 [2.54] centerline assemblies are available in a wide range of position sizes. They have end stacking capability which give the added advantage of flexibility.

The housings are made of high temperature, surface mount compatible thermoplastic material that is 94V-O rated. Contacts are phosphor bronze, fully underplated with nickel to prevent corrosion and are available in three plating options.

The receptacle contact is an established design with a fully enclosed, one-piece "box" to protect the contact area. In addition, the receptacle contact has dual cantilever beams with a built-in anti-overstress feature. Standard solder tails accommodate a board thickness of .062 [1.57].

Performance Characteristics:

Mechanical Characteristics:

Mating Force—8.0 oz. [2.22N] per contact (max.)

Unmating Force—1.0 oz. [0.28N] per contact (min.) during third mating cycle

Durability—200 cycles

Environmental Characteristics:

Operating Temperature—-65°C to +125°C

Electrical Characteristics:

Current Rating—3.0 amperes (max.) for single contact; 2.0 amperes (max.) per contact when connector is fully energized

Contact Resistance—12 milliohms (max.)

Insulation Resistance—5000 megohms (min.) between adjacent contacts

Dielectric Withstanding Voltage (at sea level)—750 V rms

Mod II Receptacle Assemblies, Single-Row, .100 [2.54] Centerline

Closed Entry, End Stackable, Short Point-of-Contact, with Standoffs



Photo 98185-5

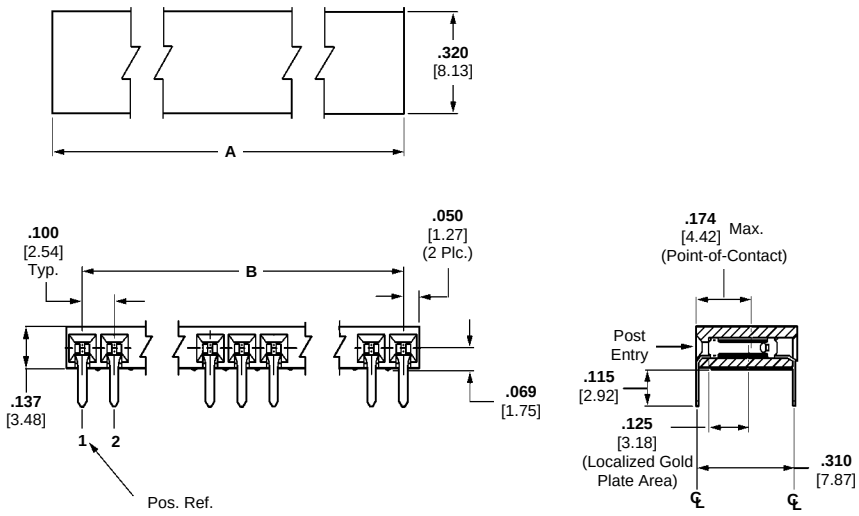

Material and Finish:

Housing—Black thermoplastic, 94V-0 rated, high temperature, surface mount compatible

Contacts—Phosphor bronze, plated as follows:

Plating A—Duplex plated .000030 [0.00076] gold on contact area, .000050-.000100 [0.00127-0.00254] bright tin-lead on solder area, with entire contact underplated .000050 [0.00127] nickel

Related Product Data:

Mateable Headers—Refer to the Mating Post Selection Guide (page 2045)

Performance Characteristics—page 2088

Technical Documents: page 2160

Product Specification
108-25026

Application Specification
114-25018

Additional receptacle assembly sizes are available; minimum order quantities may apply. Consult Tyco Electronics.

No.of Positions	Dimensions A	Dimensions B	Contact Plating/Part Numbers Plating A
2	**.200** 5.08	**.100** 2.54	535676-1
3	**.300** 7.62	**.200** 5.08	535676-2
4	**.400** 10.16	**.300** 7.62	535676-3
5	**.500** 12.70	**.400** 10.16	535676-4
6	**.600** 15.24	**.500** 12.70	535676-5
8	**.800** 20.32	**.700** 17.78	535676-7
9	**.900** 22.86	**.800** 20.32	535676-8
10	**1.000** 25.40	**.900** 22.86	535676-9
11	**1.100** 27.94	**1.000** 25.40	1-535676-0
12	**1.200** 30.48	**1.100** 27.94	1-535676-1
13	**1.300** 33.02	**1.200** 30.48	1-535676-2
14	**1.400** 35.56	**1.300** 33.02	1-535676-3
15	**1.500** 38.10	**1.400** 35.56	1-535676-4
16	**1.600** 40.64	**1.500** 38.10	1-535676-5
17	**1.700** 43.18	**1.600** 40.64	1-535676-6
18	**1.800** 45.72	**1.700** 43.18	1-535676-7
19	**1.900** 48.26	**1.800** 45.72	1-535676-8
20	**2.000** 50.80	**1.900** 48.26	1-535676-9
40	**4.000** 101.60	**3.900** 99.06	3-535676-9

Note: Tyco Electronics recommends mating gold or duplex plated headers with duplex plated receptacle assemblies.

Keying Plug

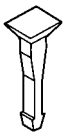

Part Number 86286-1
(Plugs into receptacle contact)

Material:

Natural color nylon

For complete product information, order Catalog 1307819

Products for Industrial & Commercial Applications

Dimensions are shown for reference purposes only.

Dimensions are in inches and millimeters unless otherwise specified. Values in brackets are metric equivalents.

Specifications subject to change.

Technical Support Center
1-800-522-6752
www.tycoelectronics.com

Mod II Receptacle Assemblies, Double-Row, .100 x .100 [2.54 x 2.54] Centerlines

Closed Entry, End Stackable, Short Point-of-Contact, with Standoffs

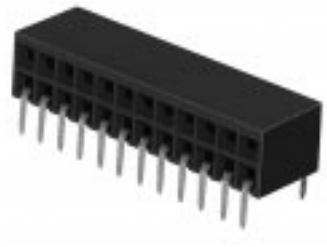

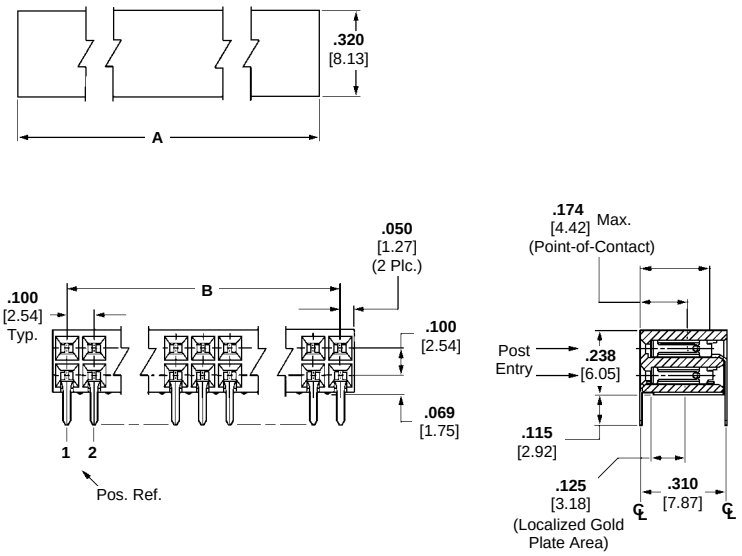

Material and Finish:

Housing—Black thermoplastic, 94V-0 rated, high temperature, surface mount compatible

Contacts—Phosphor bronze, plated as follows:

Plating A—Duplex plated .000030 [0.00076] gold on contact area, .000050-.000100 [0.00127-0.00254] bright tin-lead on solder area, with entire contact underplated .000050 [0.00127] nickel

Related Product Data:

Mateable Headers—Refer to the Mating Post Selection Guide (page 2045)

Performance Characteristics—page 2088

Technical Documents: page 2160

Product Specification
108-25026

Application Specification
114-25018

Additional receptacle assembly sizes are available; minimum order quantities may apply. Consult Tyco Electronics.

No. of Positions	Dimensions		Contact Plating/Part Numbers
	A	B	Plating A
4	**.200** 5.08	**.100** 2.54	6-535512-1
6	**.300** 7.62	**.200** 5.08	6-535512-2
8	**.400** 10.16	**.300** 7.62	6-535512-3
10	**.500** 12.70	**.400** 10.16	6-535512-4
12	**.600** 15.24	**.500** 12.70	535512-1
14	**.700** 17.78	**.600** 15.24	1-535512-7
16	**.800** 20.32	**.700** 17.78	1-535512-8
18	**.900** 22.86	**.800** 20.32	1-535512-6
20	**1.000** 25.40	**.900** 22.86	535512-2
22	**1.100** 27.94	**1.000** 25.40	1-535512-9
26	**1.300** 33.02	**1.200** 30.48	2-535512-0
28	**1.400** 35.56	**1.300** 33.02	2-535512-1
30	**1.500** 38.10	**1.400** 35.56	2-535512-2
32	**1.600** 40.64	**1.500** 38.10	2-535512-3
34	**1.700** 43.18	**1.600** 40.64	535512-4
36	**1.800** 45.72	**1.700** 43.18	535512-5
40	**2.000** 50.80	**1.900** 48.26	2-535512-5
42	**2.100** 53.54	**2.000** 50.80	2-535512-6
50	**2.500** 63.50	**2.400** 60.96	535512-7
60	**3.000** 76.20	**2.900** 73.66	3-535512-0

Notes: 1. Tyco Electronics recommends mating gold or duplex plated headers with duplex plated receptacle assemblies.
2. .256 [6.50] minimum positive pin stop to prevent shorting between row.

For complete product information, order Catalog 1307819

Products for Industrial & Commercial Applications

Dimensions are shown for reference purposes only.

Dimensions are in inches and millimeters unless otherwise specified. Values in brackets are metric equivalents.

Specifications subject to change.

Technical Support Center
1-800-522-6752
www.tycoelectronics.com

Receptacle Assemblies, Vertical Mount

Product Facts

- **Dual-cantilever beam contact with box design and anti-overstress protection**
- **Single-row assemblies have .100 [2.54] centerline contact spacing; double-row assemblies have .100 x .100 [2.54 x 2.54] centerline contact spacing**
- **3 through 40 positions in single-row assemblies; 2 through 80 positions in double-row assemblies**
- **Mod. II Standard .340 [8.64] and Mod. IV low .265 [6.73] profiles**
- **Mod. II standard profile available in top entry**
- **Mod. IV low profile available in top and bottom entry**
- **Duplex gold and bright tin-lead plated contacts have full nickel underplate**
- **Thermoplastic housings, 94V-0 rated**
- **Standoffs for easy flux cleaning**
- **All assemblies are end stackable**
- **Recognized under the Component Program of Underwriters Laboratories Inc., File No. E28476**
- **Certified by Canadian Standards Association, File No. LR 7189**

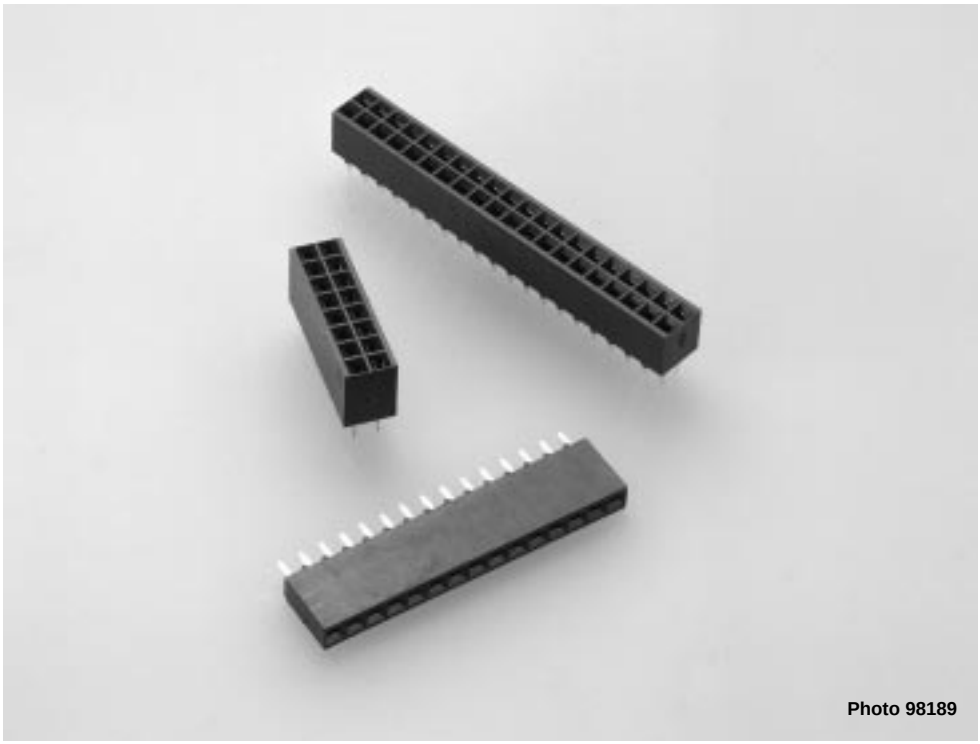

Photo 98189

Vertical receptacle assemblies are designed to reliably and economically meet the packaging and interconnection requirements of today's electronic industry.

This broad product line offers a wide variety of assembly styles and features. They are available in top and bottom entry styles, in both single and double row configurations. The .100 [2.54] centerline assemblies are available in 3-40 (single row) positions and 2-80 (double row) positions. Low profile housings also enhance the product line by being end stackable, which gives the advantage of added flexibility.

The housings are made of flame retardant material that is 94 V-0 rated. Contacts are phosphor bronze, fully underplated with nickel to minimize corrosion and are available in three plating options.

The receptacle contact is an established design, with a fully enclosed one-piece "box" to protect the contact beams, with a built-in anti-overstress feature. These assemblies are offered in .265 [6.73] (Mod II) and .340[8.64] (Mod IV) high profiles. Standard solder tails accommodate board thickness of .062 [1.57].

Performance Characteristics:

Mechanical Characteristics:

Mating Force—8.0 oz. [2.22N] per contact (max.)

Unmating Force—1.0 oz. [0.28N] per contact (min.)

Durability (Tested to)—200 cycles

Environmental Characteristics:

Operating Temperature—-65°C to +105°C

Electrical Characteristics:

Current Rating—3.0 amperes (max.) for single contact; 2.0 amperes (max.) per contact when connector is fully energized

Contact Resistance—12 milliohms (max.)

Insulation Resistance—5000 megohms (min.) between adjacent contacts

Dielectric Withstanding Voltage (at sea level)—750 V rms

For complete product information, order Catalog 1307819

Products for Industrial & Commercial Applications

Dimensions are shown for reference purposes only.

Dimensions are in inches and millimeters unless otherwise specified. Values in brackets are metric equivalents.

Specifications subject to change.

Technical Support Center
1-800-522-6752
www.tycoelectronics.com

Mod II Receptacle Assemblies, Single-Row, .100 [2.54] Centerline

Closed Top Entry, End Stackable, with Single Tine Contacts



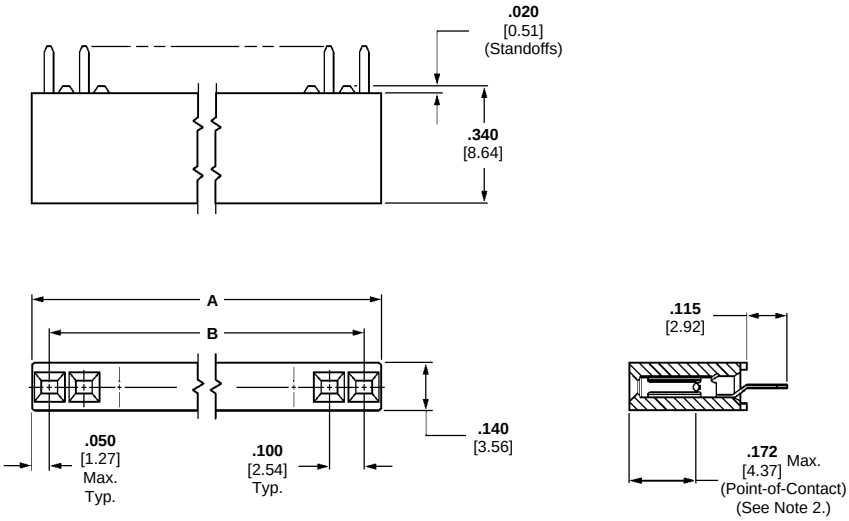

Material and Finish:

Housing—Black thermoplastic, 94V-0 rated

Contacts—Phosphor bronze, plated as follows:

Plating A—Duplex plated .000030 [0.00076] gold on contact area, .000050-.000100 [0.00127-0.00254] bright tin-lead on solder area, with entire contact underplated .000050 [0.00127] nickel

Related Product Data:

Mateable Headers—Refer to the Mating Post Selection Guide (page 2045)

Performance Characteristics—page 2088

Technical Documents: page 2160

Product Specification
108-25026

Application Specification
114-25018

Additional receptacle assembly sizes are available; minimum order quantities may apply. Consult Tyco Electronics.

No. of Positions	Dimensions A		Dimensions B		Contact Plating/Part Numbers Plating A
3	**.300**	7.62	**.200**	5.08	534237-1
4	**.400**	10.16	**.300**	7.62	534237-2
5	**.500**	12.70	**.400**	10.16	534237-3
6	**.600**	15.24	**.500**	12.70	534237-4
8	**.800**	20.32	**.700**	17.78	534237-6
10	**1.000**	25.40	**.900**	22.86	534237-8
11	**1.100**	27.94	**1.000**	25.40	534237-9
12	**1.200**	30.48	**1.100**	27.94	1-534237-0
13	**1.300**	33.02	**1.200**	30.48	1-534237-1
14	**1.400**	35.56	**1.300**	33.02	1-534237-2
15	**1.500**	38.10	**1.400**	35.56	1-534237-3
16	**1.600**	40.64	**1.500**	38.10	1-534237-4
17	**1.700**	43.18	**1.600**	40.64	1-534237-5
18	**1.800**	45.72	**1.700**	43.18	1-534237-6
19	**1.900**	48.26	**1.800**	45.72	1-534237-7
20	**2.000**	50.80	**1.900**	48.26	1-534237-8
30	**3.000**	76.20	**2.900**	73.66	2-534237-8
40	**4.000**	101.60	**3.900**	99.06	3-534237-8

Notes: 1. Tyco Electronics recommends mating gold or duplex plated headers with duplex plated receptacle assemblies.
2. To obtain the minimum mating post length, add .020 [0.51] (not including the post lead in chamfer) to the maximum point-of-contact dimension.

Keying Plug

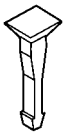

Part Number 86286-1
(Plugs into receptacle contact)

Material:

Natural color nylon

For complete product information, order Catalog 1307819

Products for Industrial & Commercial Applications

Dimensions are shown for reference purposes only.

Dimensions are in inches and millimeters unless otherwise specified. Values in brackets are metric equivalents.

Specifications subject to change.

Technical Support Center
1-800-522-6752
www.tycoelectronics.com

Mod II Receptacle Assemblies, Double-Row, .100 x .100 [2.54 x 2.54] Centerline

Closed Top Entry, End Stackable .100 x .100 [2.54 x 2.54] Centerline, .100 [2.54] Tine Spacing



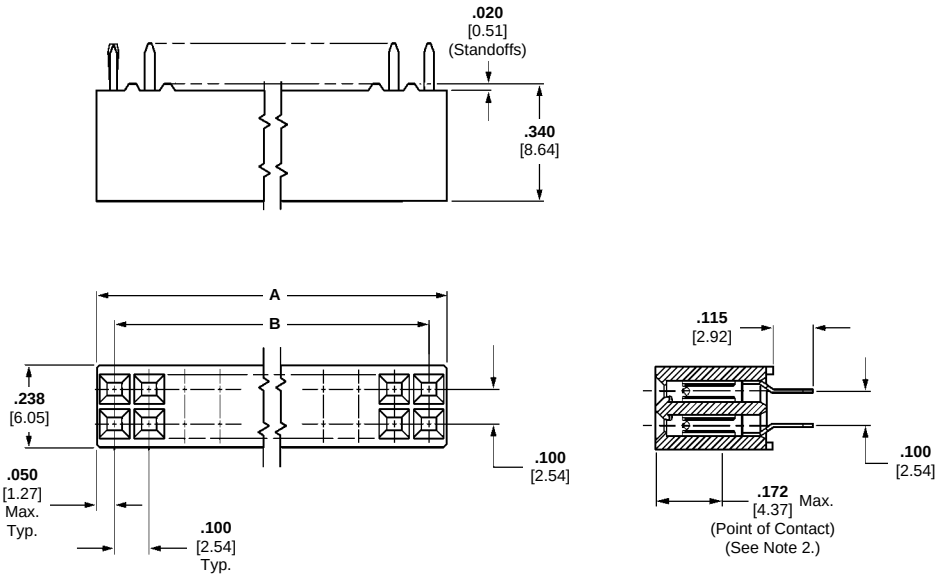

Material and Finish:

Housing—Black thermoplastic, 94V-0 rated

Contacts—Phosphor bronze, plated as follows:

Plating A—Duplex plated .000030 [0.00076] gold on contact area, .000050-.000100 [0.00127-0.00254] bright tin-lead on solder area, with entire contact underplated .000050 [0.00127] nickel

Related Product Data:

Mateable Headers—Refer to the Mating Post Selection Guide (page 2045)

Performance Characteristics—page 2058

Technical Documents: page 2160

Product Specification
108-25026

Application Specification
114-25018

Additional receptacle assembly sizes are available; minimum order quantities may apply. Consult Tyco Electronics.

No. of Positions	Dimensions A	Dimensions B	Contact Plating/Part Numbers Plating A
2	**.100** 2.54	—	534206-1
4	**.200** 5.08	**.100** 2.54	534206-2
6	**.300** 7.62	**.200** 5.08	534206-3
8	**.400** 10.16	**.300** 7.62	534206-4
10	**.500** 12.70	**.400** 10.16	534206-5
12	**.600** 15.24	**.500** 12.70	534206-6
14	**.700** 17.78	**.600** 15.24	534206-7
16	**.800** 20.32	**.700** 17.78	534206-8
18	**.900** 22.86	**.800** 20.32	534206-9
20	**1.000** 25.40	**.900** 22.86	1-534206-0
22	**1.100** 27.94	**1.000** 25.40	1-534206-1
24	**1.200** 30.48	**1.100** 27.94	1-534206-2
26	**1.300** 33.02	**1.200** 30.48	1-534206-3
30	**1.500** 38.10	**1.400** 35.56	1-534206-5
32	**1.600** 40.64	**1.500** 38.10	1-534206-6
34	**1.700** 43.18	**1.600** 40.64	1-534206-7
36	**1.800** 45.72	**1.700** 43.18	1-534206-8
40	**2.000** 50.80	**1.900** 48.26	2-534206-0

Notes: 1. Tyco Electronics recommends mating gold or duplex plated headers with duplex plated receptacle assemblies.
2. To obtain the minimum mating post length, add .020 [0.51] (not including the post lead in chamfer) to the maximum point-of-contact dimension.

Keying Plug

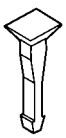

Part Number 86286-1
(Plugs into receptacle contact)

Material:

Natural color nylon

For complete product information, order Catalog 1307819

Products for Industrial & Commercial Applications

Dimensions are shown for reference purposes only.

Dimensions are in inches and millimeters unless otherwise specified. Values in brackets are metric equivalents.

Specifications subject to change.

Technical Support Center
1-800-522-6752
www.tycoelectronics.com

Mod IV Receptacle Assemblies, Single-Row, .100 [2.54] Centerline

Bottom Entry, End Stackable, Low Profile with Dual Tine Contacts



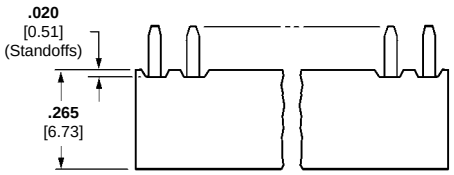

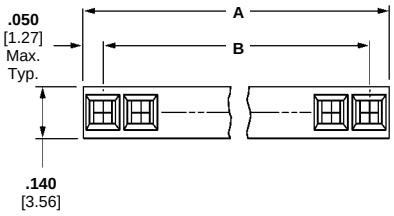

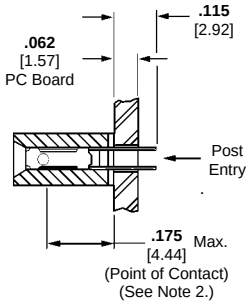

Material and Finish:

Housing—Black thermoplastic, 94V-0 rated

Contacts—Phosphor bronze, plated as follows:

Plating A—Duplex plated .000030 [0.00076] gold on contact area, .000050-.000100 [0.00127-0.00254] bright tin-lead on solder area, with entire contact underplated .000050 [0.00127] nickel

Related Product Data:

Mateable Headers—Refer to the Mating Post Selection Guide (page 2045)

Performance Characteristics—page 2088

Technical Documents: page 2160

Product Specification
108-25022

Application Specification
114-25018

Additional receptacle assembly sizes are available; minimum order quantities may apply. Consult Tyco Electronics.

No. of Positions	Dimensions A	Dimensions B	Contact Plating/Part Numbers Plating A
3	**.300** 7.62	**.200** 5.08	3-87879-7
4	**.400** 10.16	**.300** 7.62	3-87879-6
5	**.500** 12.70	**.400** 10.16	3-87879-8
6	**.600** 15.24	**.500** 12.70	87879-3
7	**.700** 17.78	**.600** 15.24	87879-4
8	**.800** 20.32	**.700** 17.78	87879-1
9	**.900** 22.86	**.800** 20.32	87879-5
10	**1.000** 25.40	**.900** 22.86	87879-2
11	**1.100** 27.94	**1.000** 25.40	87879-6
12	**1.200** 30.48	**1.100** 27.94	87879-7
13	**1.300** 33.02	**1.200** 30.48	87879-8
14	**1.400** 35.56	**1.300** 33.02	87879-9
15	**1.500** 38.10	**1.400** 35.56	1-87879-0
16	**1.600** 40.64	**1.500** 38.10	1-87879-1
17	**1.700** 43.18	**1.600** 40.64	1-87879-2
18	**1.800** 45.72	**1.700** 43.18	1-87879-3
19	**1.900** 48.26	**1.800** 45.72	1-87879-4
20	**2.000** 50.80	**1.900** 48.26	1-87879-5
30	**3.000** 76.20	**2.900** 73.66	2-87879-5
40	**4.000** 101.60	**3.900** 99.06	3-87879-5

Notes: 1. Tyco Electronics recommends mating gold or duplex plated headers with duplex plated receptacle assemblies.
2. To obtain the minimum mating post length, add .020 [0.51] (not including the post lead in chamfer) to the maximum point-of-contact dimension, and .062 for recommended board thickness.

Keying Plug

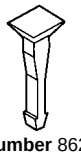

Part Number 86286-1
(Plugs into receptacle contact)

Material:

Natural color nylon

For complete product information, order Catalog 1307819

Products for Industrial & Commercial Applications

Dimensions are shown for reference purposes only.

Dimensions are in inches and millimeters unless otherwise specified. Values in brackets are metric equivalents.

Specifications subject to change.

Technical Support Center
1-800-522-6752
www.tycoelectronics.com

Mod IV Receptacle Assemblies, Single-Row, .100 [2.54] Centerline

Closed Top Entry, End Stackable, Low Profile with Single Tine Contacts



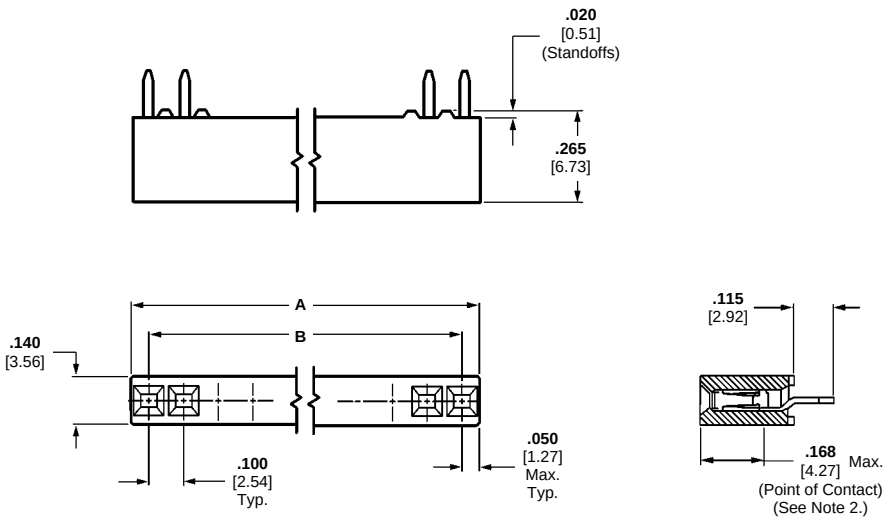

Material and Finish:

Housing—Black thermoplastic, 94V-0 rated

Contacts—Phosphor bronze, plated as follows:

Plating A—Duplex plated .000030 [0.00076] gold on contact area, .000050-.000100 [0.00127-0.00254] bright tin-lead on solder area, with entire contact underplated .000050 [0.00127] nickel

Related Product Data:

Mateable Headers—Refer to the Mating Post Selection Guide (page 2045)

Performance Characteristics—page 2088

Technical Documents: page 2160

Product Specification
108-25022

Application Specification
114-25018

Additional receptacle assembly sizes are available; minimum order quantities may apply. Consult Tyco Electronics.

No. of Positions	Dimensions A	Dimensions B	Contact Plating/Part Numbers Plating A
3	**.300** 7.62	**.200** 5.08	535541-1
4	**.400** 10.16	**.300** 7.62	535541-2
5	**.500** 12.70	**.400** 10.16	535541-3
6	**.600** 15.24	**.500** 12.70	535541-4
7	**.700** 17.78	**.600** 15.24	535541-5
8	**.800** 20.32	**.700** 17.78	535541-6
9	**.900** 22.86	**.800** 20.32	535541-7
10	**1.000** 25.40	**.900** 22.86	535541-8
11	**1.100** 27.94	**1.000** 25.40	535541-9
12	**1.200** 30.48	**1.100** 27.94	1-535541-0
13	**1.300** 33.02	**1.200** 30.48	1-535541-1
14	**1.400** 35.56	**1.300** 33.02	1-535541-2
15	**1.500** 38.10	**1.400** 35.56	1-535541-3
16	**1.600** 40.64	**1.500** 38.10	1-535541-4
17	**1.700** 43.18	**1.600** 40.64	1-535541-5
18	**1.800** 45.72	**1.700** 43.18	1-535541-6
19	**1.900** 48.26	**1.800** 45.72	1-535541-7
20	**2.000** 50.80	**1.900** 48.26	1-535541-8
30	**3.000** 76.20	**2.900** 73.66	2-535541-8
40	**4.000** 101.60	**3.900** 99.06	3-535541-8

Notes: 1. Tyco Electronics recommends mating gold or duplex plated headers with select gold plated receptacle assemblies.
2. To obtain the minimum mating post length, add .020 [0.51] (not including the post lead in chamfer) to the maximum point-of-contact dimension.

For complete product information, order Catalog 1307819

Products for Industrial & Commercial Applications

Dimensions are shown for reference purposes only.

Dimensions are in inches and millimeters unless otherwise specified. Values in brackets are metric equivalents.

Specifications subject to change.

Technical Support Center
1-800-522-6752
www.tycoelectronics.com

Mod IV Receptacle Assemblies, Double-Row, .100 x .100 [2.54 x 2.54] Centerline

Closed Top Entry, End Stackable, Low Profile, .100 x .100 [2.54 x 2.54] Centerline, .100 [2.54] Tine Spacing



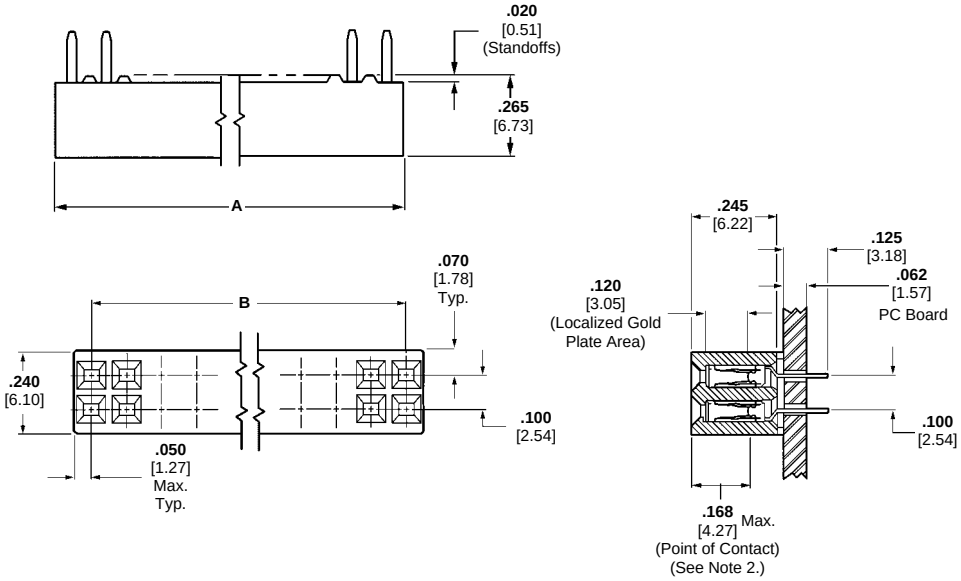

Material and Finish:

Housing—Black thermoplastic, 94V-0 rated

Contacts—Phosphor bronze, plated as follows:

Plating A—Duplex plated .000030 [0.00076] gold on contact area, .000100-.000200 [0.00254-0.00508] bright tin-lead on solder area, with entire contact underplated .000050 [0.00127] nickel

Related Product Data:

Mateable Headers—Refer to the Mating Post Selection Guide (page 2045)

Performance Characteristics—page 2088

Technical Documents: page 2160

Product Specification
108-25022

Application Specification
114-25018

No.of Positions	Dimensions		Contact Plating/Part Numbers
	A	B	Plating A
2	**.100** 2.54	—	534998-1
4	**.200** 5.08	**.100** 2.54	534998-2
6	**.300** 7.62	**.200** 5.08	534998-3
8	**.400** 10.16	**.300** 7.62	534998-4
10	**.500** 12.70	**.400** 10.16	534998-5
12	**.600** 15.24	**.500** 12.70	534998-6
14	**.700** 17.78	**.600** 15.24	534998-7
16	**.800** 20.32	**.700** 17.78	534998-8
18	**.900** 22.86	**.800** 20.32	534998-9
20	**1.000** 25.40	**.900** 22.86	1-534998-0
22	**1.100** 27.94	**1.000** 25.40	1-534998-1
24	**1.200** 30.48	**1.100** 27.94	1-534998-2
26	**1.300** 33.02	**1.200** 30.48	1-534998-3
28	**1.400** 35.56	**1.300** 33.02	1-534998-4
30	**1.500** 38.10	**1.400** 35.56	1-534998-5
32	**1.600** 40.64	**1.500** 38.10	1-534998-6
34	**1.700** 43.18	**1.600** 40.64	1-534998-7
36	**1.800** 45.72	**1.700** 43.18	1-534998-8
38	**1.900** 48.26	**1.800** 45.72	1-534998-9
40	**2.000** 50.80	**1.900** 48.26	2-534998-0

Notes: 1. Tyco Electronics recommends mating gold or duplex plated headers with duplex plated receptacle assemblies.
2. To obtain the minimum mating post length, add .020 [0.51] (not including the post lead in chamfer) to the maximum point-of-contact dimension.

For complete product information, order Catalog 1307819

Products for Industrial & Commercial Applications

Dimensions are shown for reference purposes only.

Dimensions are in inches and millimeters unless otherwise specified. Values in brackets are metric equivalents.

Specifications subject to change.

Technical Support Center
1-800-522-6752
www.tycoelectronics.com

Mod IV Receptacle Assemblies, Double-Row, .100 x .100 [2.54 x 2.54] Centerline

Bottom Entry, End Stackable, Low Profile, .100 x .100 [2.54 x 2.54] Centerline, .300 [7.62] Tine Spacing

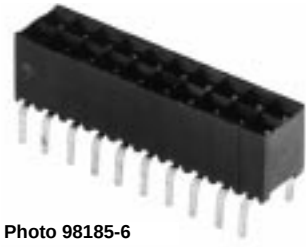

Photo 98185-6

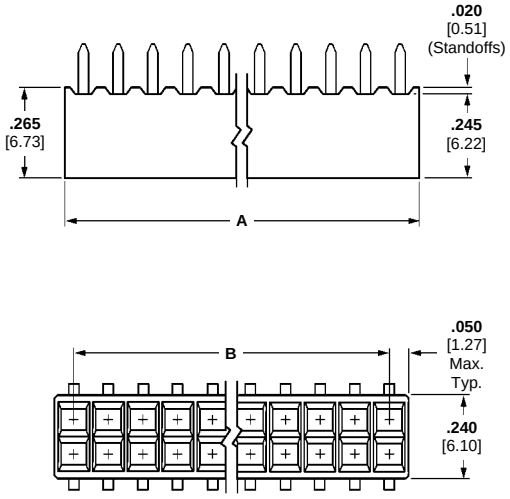

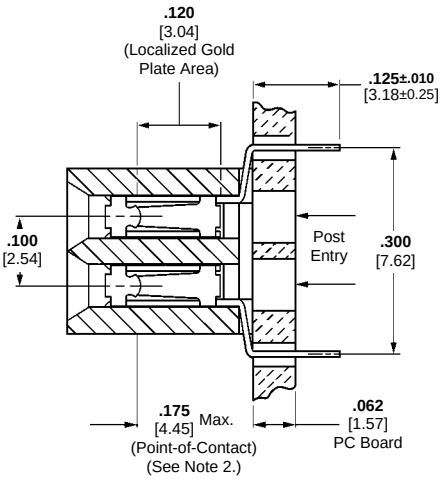

Material and Finish:

Housing—Black thermoplastic, 94V-0 rated

Contacts—Phosphor bronze, plated as follows:

Plating A—Duplex plated .000030 [0.00076] gold on contact area, .000050-.000100 [0.00127-0.00254] bright tin-lead on solder area, with entire contact underplated .000050 [0.00127] nickel

Related Product Data:

Mateable Headers—Refer to the Mating Post Selection Guide (page 2045)

Performance Characteristics—page 2088

Technical Documents: page 2160

Product Specification
108-25022

Application Specification
114-25018

Additional receptacle assembly sizes are available; minimum order quantities may apply. Consult Tyco Electronics.

No. of Positions	Dimensions		Contact Plating/Part Numbers
	A	B	Plating A
2	**.100** 2.54	—	1-534267-3
4	**.200** 5.08	**.100** 2.54	1-534267-7
6	**.300** 7.62	**.200** 5.08	1-534267-4
8	**.400** 10.16	**.300** 7.62	534267-5
14	**.700** 17.78	**.600** 15.24	534267-1
18	**.900** 22.86	**.800** 20.32	1-534267-0
20	**1.000** 25.40	**.900** 22.86	534267-2
24	**1.200** 30.48	**1.100** 27.94	534267-9
30	**1.500** 38.10	**1.400** 35.56	1-534267-2
36	**1.800** 45.72	**1.700** 43.18	1-534267-5
40	**2.000** 50.80	**1.900** 48.26	534267-7
48	**2.400** 60.96	**2.300** 58.42	1-534267-1
50	**2.500** 63.50	**2.400** 60.96	1-534267-8
60	**3.000** 76.20	**2.900** 73.66	534267-8
76	**3.800** 96.52	**3.700** 93.98	1-534267-6
80	**4.000** 101.60	**3.900** 99.06	534267-4

Notes: 1. Tyco Electronics recommends mating gold or duplex plated headers with duplex plated receptacle assemblies.
2. To obtain the minimum mating post length, add .020 [0.51] (not including the post lead in chamfer) to the maximum point-of-contact dimension, and .062 for recommended board thickness.

Keying Plug

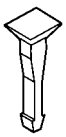

Part Number 86286-1
(Plugs into receptacle contact)

Material:

Natural color nylon

For complete product information, order Catalog 1307819

Products for Industrial & Commercial Applications

Dimensions are shown for reference purposes only.

Dimensions are in inches and millimeters unless otherwise specified. Values in brackets are metric equivalents.

Specifications subject to change.

Technical Support Center
1-800-522-6752
www.tycoelectronics.com

Mod. IV Receptacle Assemblies, Double-Row, .100 x .100 [2.54 x 2.54] Centerline

Closed Top Entry, Low Profile, .100 x .100 [2.54 x 2.54] Centerline, .150 [3.81] Tine Spacing

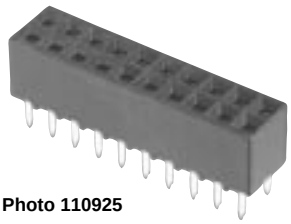

Photo 110925

Material and Finish:

Housing—Black thermoplastic, 94V-0 rated

Contacts—Phosphor bronze, plated as follows:

Plating A—Duplex plated .000030 [0.00076] gold on contact area, .000100-.000200 [0.00254-0.00508] bright tin-lead on solder area, with entire contact underplated .000050 [0.00127] nickel

Related Product Data:

Mateable Headers—Refer to the Mating Post Selection Guide (page 2045)

Performance Characteristics—page 2088

Technical Documents: page 2160

Product Specification
108-25022

Application Specification
114-25018

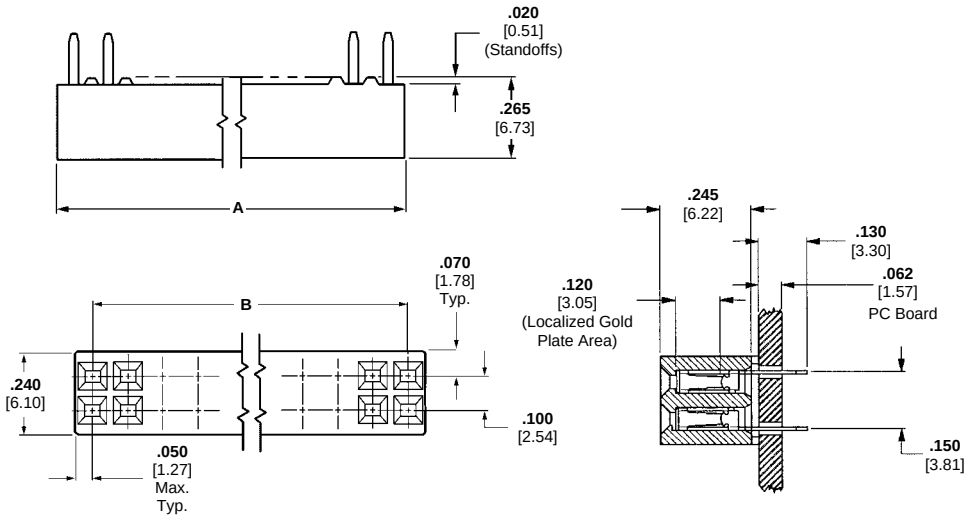

No. of Positions	Dimensions A	Dimensions B	Contact Plating/Part Numbers Plating A
2	.100 2.54	—	535542-1
4	.200 5.08	.100 2.54	535542-2
6	.300 7.62	.200 5.08	535542-3
8	.400 10.16	.300 7.62	535542-4
10	.500 12.70	.400 10.16	535542-5
12	.600 15.24	.500 12.70	535542-6
14	.700 17.78	.600 15.24	535542-7
16	.800 20.32	.700 17.78	535542-8
18	.900 22.86	.800 20.32	535542-9
20	1.000 25.40	.900 22.86	1-535542-0
22	1.100 27.94	1.000 25.40	1-535542-1
24	1.200 30.48	1.100 27.94	1-535542-2
26	1.300 33.02	1.200 30.48	1-535542-3
28	1.400 35.56	1.300 33.02	1-535542-4
30	1.500 38.10	1.400 35.56	1-535542-5
32	1.600 40.64	1.500 38.10	1-535542-6
34	1.700 43.18	1.600 40.64	1-535542-7
36	1.800 45.72	1.700 43.18	1-535542-8
38	1.900 48.26	1.800 45.72	1-535542-9
40	2.000 50.80	1.900 48.26	2-535542-0
50	2.500 63.50	2.400 60.96	2-535542-5
60	3.000 76.20	2.900 73.66	3-535542-0

Notes: 1. Tyco Electronics recommends mating gold or duplex plated headers with duplex plated receptacle assemblies.
2. To obtain the minimum mating post length, add .020 [0.51] (not including the post lead in chamfer) to the maximum point-of-contact dimension.

For complete product information, order Catalog 1307819

Products for Industrial & Commercial Applications

Dimensions are shown for reference purposes only.

Dimensions are in inches and millimeters unless otherwise specified. Values in brackets are metric equivalents.

Specifications subject to change.

Technical Support Center
1-800-522-6752
www.tycoelectronics.com

Mod. IV Receptacle Assemblies, Double-Row, .100 x .100 [2.54 x 2.54] Centerline

Bottom Entry, Low Profile, .100 x .100 [2.54 x 2.54] Centerline, .150 [3.81] Tine Spacing

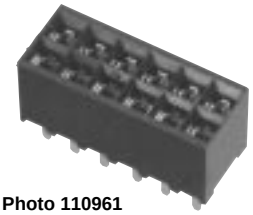

Photo 110961

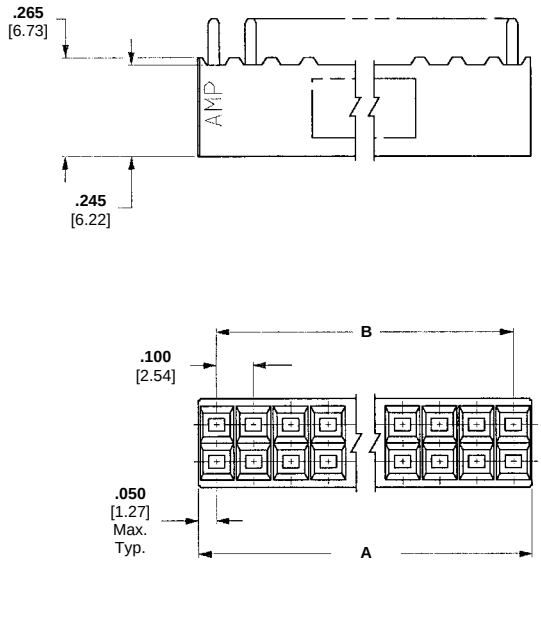

Material and Finish:

Housing—Black thermoplastic, 94V-0 rated

Contacts—Phosphor bronze, plated as follows:

Plating A—Duplex plated .000030 [0.00076] gold on contact area, .000100-.000200 [0.00254-0.00508] bright tin-lead on solder area, with entire contact underplated .000050 [0.00127] nickel

Related Product Data:

Mateable Headers—Refer to the Mating Post Selection Guide (page 2045)

Performance Characteristics—page 2088

Technical Documents: page 2160

Product Specification
108-25022

Application Specification
114-25018

Additional receptacle assembly sizes are available; minimum order quantities may apply. Consult Tyco Electronics.

No. of Positions	Dimensions A	Dimensions B	Contact Plating/Part Numbers Plating A
2	**.100** 2.54	—	147327-1
4	**.200** 5.08	**.100** 2.54	147327-2
6	**.300** 7.62	**.200** 5.08	147327-3
8	**.400** 10.16	**.300** 7.62	147327-4
14	**.700** 17.78	**.600** 15.24	147327-7
18	**.900** 22.86	**.800** 20.32	147327-9
20	**1.000** 25.40	**.900** 22.86	1-147327-0
24	**1.200** 30.48	**1.100** 27.94	1-147327-2
30	**1.500** 38.10	**1.400** 35.56	1-147327-5
36	**1.800** 45.72	**1.700** 43.18	1-147327-8
40	**2.000** 50.80	**1.900** 48.26	2-147327-0
48	**2.400** 60.96	**2.300** 58.42	2-147327-4
50	**2.500** 63.50	**2.400** 60.96	2-147327-5
60	**3.000** 76.20	**2.900** 73.66	3-147327-0
76	**3.800** 96.52	**3.700** 93.98	3-147327-8
80	**4.000** 101.60	**3.900** 99.06	4-147327-0

Notes: 1. Tyco Electronics recommends mating gold or duplex plated headers with duplex plated receptacle assemblies.
2. To obtain the minimum mating post length, add .020 [0.51] (not including the post lead in chamfer) to the maximum point-of-contact dimension, and .062 for recommended board thickness.

Mod IV Surface-Mount Vertical Receptacle Assemblies, .100 x .100 [2.54 x 2.54] Centerline

Product Facts

- **Surface Mount Leads**
- **Contact Material: phosphor bronze**
- **High temperature, black thermoplastic housings, 94V-0 rated, capable of withstanding IR or vapor-phase reflow**
- **Gold/tin-lead duplex plating for reliable mating interconnection and solder interface**
- **Metallic hold downs provide retention in the PC board prior to and during the reflow process . . . and strain relief after soldering**
- **Hold downs provide for proper lead-to-pad registration**
- **Closed-entry receptacle housings provide lead-in ramp for positive mating**
- **Receptacle contacts employ dual cantilever beams and built-in anti-overstress for reliable connections**
- **Recognized under the Component Program of Underwriters Laboratories Inc. File No. E28476**
- **Certified by Canadian Standards Association, File No. LR 7189**

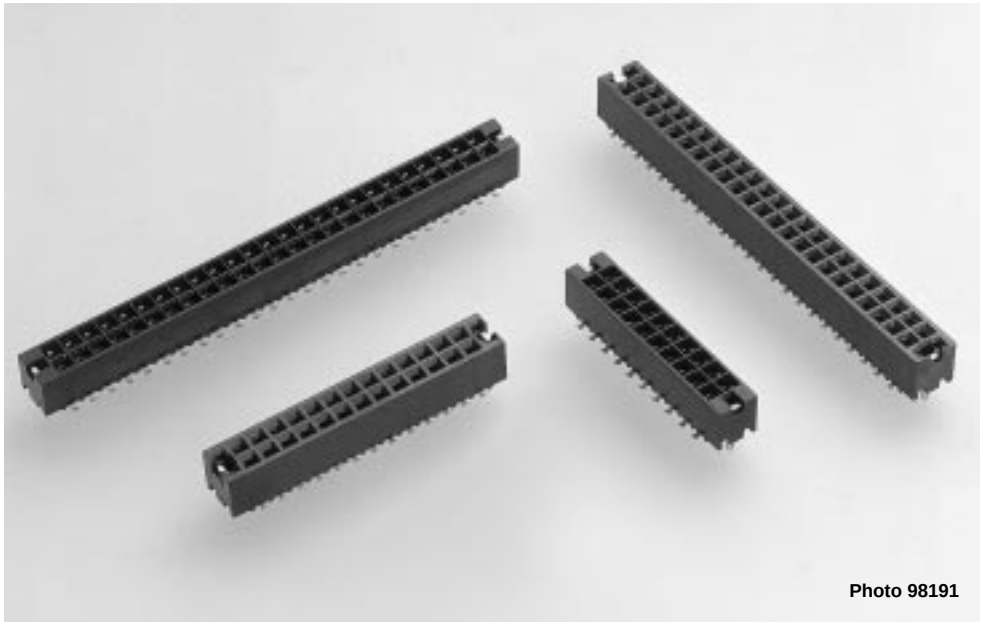

Photo 98191

The AMPMODU 0.025 [0.64] square interconnection system is an industry standard that has provided level III and IV through-hole interconnections to almost every industry and marketplace for years. As technology advances, so has the AMPMODU product line.

Surface mount vertical receptacle assemblies are available to meet your level II packaging needs as process technologies evolve from wave soldering to surface-mount reflow (infrared and vapor-phase) processes. AMPMODU surface-mount receptacle assemblies are offered in vertical top entry and vertical bottom entry configurations. These receptacles are double-row with a contact centerline spacing of .100 x .100 [2.54 x 2.54].

AMPMODU surface-mount vertical receptacle assemblies continue to provide the proven features and benefits of the through-hole counterparts in the AMPMODU product family. Closed-entry style housing design on the vertical top entry product provides a lead-in ramp for positive mating of contacts, virtually eliminating the possibility of stubbing. The dual-beam receptacle contact design, coupled with gold plating in the contact area, provides a reliable interface. The contacts also provide built-in anti-overstress protection. Tin-lead plating on the solder tails also enhances solderability.

The incorporation of compliant metallic hold downs on receptacle assemblies offers multiple benefits. The hold downs provide for proper lead-to-pad registration and provide retention to the PC board prior to and during processing. Used with a plated through-hole, the hold downs are soldered during the reflow process and serve as a strain relief for the solder joints during mating/unmating.

The design of the hold downs results in an excellent ratio of insertion/extraction forces (into the PC board); 20 lb. [89 N] maximum insertion force per pair and 10 lb. [44.5 N] minimum extraction force per pair (unsoldered). No tools are required for insertion.

For complete product information, order Catalog 1307819

Products for Industrial & Commercial Applications

Dimensions are shown for reference purposes only.

Dimensions are in inches and millimeters unless otherwise specified. Values in brackets are metric equivalents.

Specifications subject to change.

Technical Support Center
1-800-522-6752
www.tycoelectronics.com

Mod IV Surface-Mount Vertical Receptacle Assemblies, .100 x .100 [2.54 x 2.54] Centerline

Performance Specifications

Voltage Rating: 250 VAC
Current Rating: 3.0 amperes (max.) for single contact;
2.0 amperes (max.) per contact when connector is fully energized
Operating Temperature Range (Receptacle Assemblies): –65°C to +125°C
Operating Temperature Range (Headers): -65°C to +105°C
Dielectric Withstanding Voltage: 750 VAC
Termination Resistance: 12 milliohms (max.)
Insulation Resistance: 5000 megohms (min.)
Mating Force (Receptacle Assemblies): 9.0 oz. [2.50N] (max.) per contact
Unmating Force (Receptacle Assemblies): 1.5 oz. [0.42N] (min.) per contact
Durability: Tested to 200 cycles (min.) for .000030 [0.00076] gold plated contacts

Mod IV Surface-Mount Receptacle Assemblies, Double-Row, .100 x .100 [2.54 x 2.54] Centerline

Vertical Mount, Bottom Entry with Holddowns



Photo 98185-2

Material and Finish:

Housing—Black thermoplastic, 94V-0 rated, high temperature compatible

Contacts—Phosphor bronze, plated as follows:

Holddowns—Copper alloy, plated .000150 [0.00381] minimum tin-lead over .000050 [0.00127] nickel

Plating A—.000030 Gold contact area, .000150 tin-lead on solder area all over .000050 nickel

Related Product Data:

Mateable Headers—Refer to Mating Post Selection Guide (page 2045)

Performance Specifications—page 2101

Technical Documents: page 2160

Product Specification
108-25022

Application Specification
114-25018

Additional receptacle assembly sizes are available; minimum order quantities may apply. Consult Tyco Electronics.

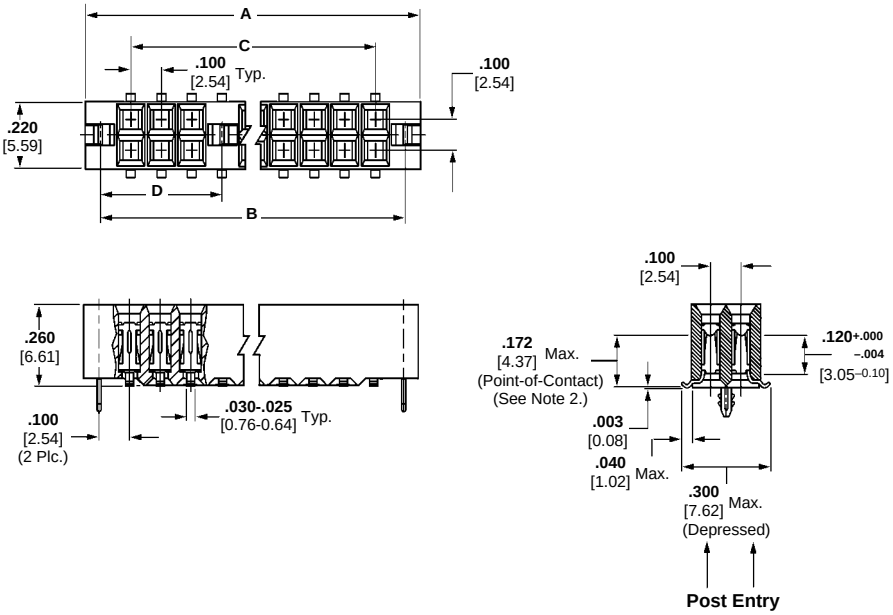

No. of Positions	Dimensions A	B	C	D	Contact Plating/Part Numbers Plating A
10	**.700** 17.78	**.600** 15.24	**.400** 10.16	See Note 1	535959-1
12	**.800** 20.32	**.700** 17.78	**.500** 12.70	See Note 1	1-535959-2
16	**1.000** 25.40	**.900** 22.86	**.700** 17.78	See Note 1	535959-9
20	**1.200** 30.48	**1.100** 27.94	**.900** 22.86	See Note 1	535959-3
24	**1.400** 35.56	**1.300** 33.02	**1.100** 27.94	See Note 1	1-535959-0
26	**1.500** 38.10	**1.400** 35.56	**1.200** 30.48	See Note 1	535959-2
30	**1.700** 43.18	**1.600** 40.64	**1.400** 35.56	See Note 1	535959-4
40	**2.200** 55.88	**2.100** 53.34	**1.900** 48.26	See Note 1	535959-5
50	**2.700** 68.58	**2.600** 66.04	**2.400** 60.96	See Note 1	535959-6
60	**3.200** 81.28	**3.100** 78.74	**2.900** 73.66	See Note 1	535959-7
64	**3.400** 86.36	**3.300** 83.82	**3.100** 78.74	See Note 1	1-535959-1
80	**4.300** 109.22	**4.200** 106.68	**4.000** 101.60	**2.100** 53.34	535959-8

Notes: 1. No center holddown.
2. To obtain the minimum mating post length, add .020 [0.51] (not including the post lead in chamfer) to the maximum point-of-contact dimension, and .062 for recommended board thickness.
3. .100±.003 [2.54±0.08] diameter holes required for 535605 series parts.

For complete product information, order Catalog 1307819

Products for Industrial & Commercial Applications

Dimensions are shown for reference purposes only.

Dimensions are in inches and millimeters unless otherwise specified. Values in brackets are metric equivalents.

Specifications subject to change.

Technical Support Center
1-800-522-6752
www.tycoelectronics.com

Mod IV Surface-Mount Receptacle Assemblies, Double-Row, .100 x .100 [2.54 x 2.54] Centerline

Vertical Mount, Bottom Entry with No Holddowns, End to End Stackable

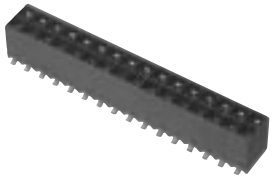

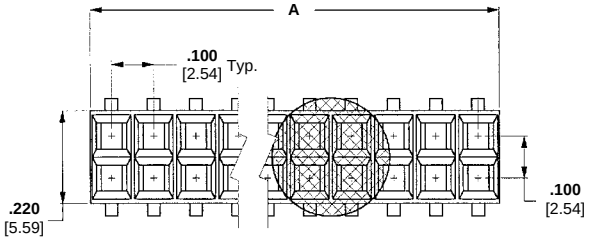

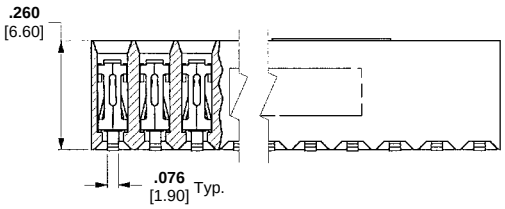

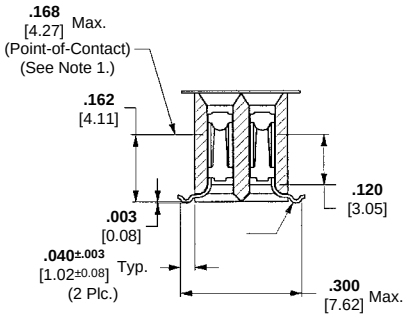

Material and Finish:

Housing—Black thermoplastic, 94V-0 rated, high temperature compatible

Contacts—Phosphor bronze, plated as follows:

Plating A—.000030 Gold contact area, .000150 tin-lead on solder area all over .000050 nickel

Related Product Data:

Mateable Headers—Refer to Mating Post Selection Guide (pages 2045)

Performance Specifications—page 2101

Technical Documents: page 2160

Product Specification
108-25022

Application Specification
114-25018

Additional receptacle assembly sizes are available; minimum order quantities may apply. Consult Tyco Electronics.

No. of Positions	Dimensions A	Dimensions B	Contact Plating/Part Numbers Plating A
10	**.500** 12.70	**.400** 10.16	147109-3
12	**.600** 15.24	**.500** 12.70	147109-4
16	**.800** 20.32	**.700** 17.78	147109-6
20	**1.000** 25.40	**.900** 22.86	147109-8
24	**1.200** 30.48	**1.100** 27.94	1-147109-0
26	**1.300** 33.02	**1.200** 30.48	1-147109-1
30	**1.500** 38.10	**1.400** 35.56	1-147109-3
40	**2.000** 50.80	**1.900** 48.26	1-147109-8
50	**2.500** 63.50	**2.400** 60.96	2-147109-3
60	**3.000** 76.20	**2.900** 73.66	2-147109-8
64	**3.200** 81.28	**3.100** 78.74	3-147109-0
80	**4.000** 101.60	**3.900** 99.06	3-147109-8

Notes: 1. To obtain the minimum mating post length, add .020 [0.51] (not including the post lead in chamfer) to the maximum point-of-contact dimension, and .062 for recommended board thickness.
2. Tape and Reel Packaging.

Keying Plug

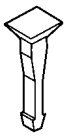

Part Number 86286-1
(Plugs into receptacle contact)

Material:

Natural color nylon

For complete product information, order Catalog 1307819

Products for Industrial & Commercial Applications

Dimensions are shown for reference purposes only.

Dimensions are in inches and millimeters unless otherwise specified. Values in brackets are metric equivalents.

Specifications subject to change.

Technical Support Center
1-800-522-6752
www.tycoelectronics.com

Mod IV Surface-Mount Receptacle Assemblies, Double-Row, .100 x .100 [2.54 x 2.54] Centers

Vertical Mount, Closed Top Entry with Holddowns



Photo 98185-1

Material and Finish:

Housing—Black thermoplastic, 94V-0 rated, high temperature compatible

Contacts—Phosphor bronze, plated as follows:

Plating A—.000030 Gold contact area, .000150 tin-lead on solder area all over .000050 nickel

Holddowns—Copper alloy, plated .000150 [0.00381] minimum tin-lead over .000050 [0.00127] nickel

Related Product Data:

Mateable Headers—Refer to Mating Post Selection Guide (page 2045)

Performance Specifications—page 2101

Technical Documents: page 2160

Product Specification
108-25022

Application Specification
114-25018

Additional receptacle assembly sizes are available; minimum order quantities may apply. Consult Tyco Electronics.

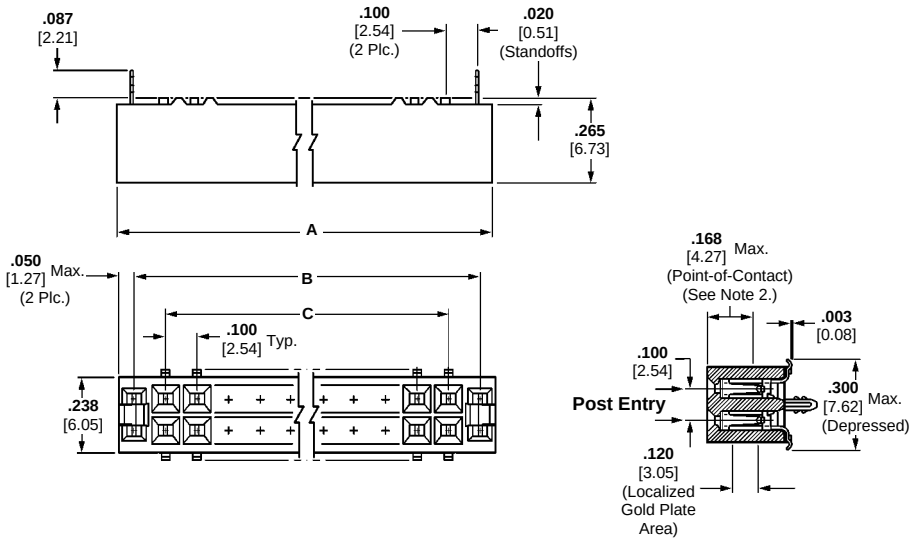

No. of Positions	Dimensions A		B		C		D	Contact Plating/Part Numbers Plating A
10	**.700**	17.78	**.600**	15.24	**.400**	10.16	See Note 1	147102-5
14	**.900**	22.86	**.800**	20.32	**.600**	15.24	See Note 1	147102-7
20	**1.200**	30.48	**1.100**	27.94	**.900**	22.86	See Note 1	1-147102-0
22	**1.300**	33.02	**1.200**	30.48	**1.000**	25.40	See Note 1	1-147102-1
26	**1.500**	38.10	**1.400**	35.56	**1.200**	30.48	See Note 1	1-147102-3
30	**1.700**	43.18	**1.600**	40.64	**1.400**	35.56	See Note 1	1-147102-5
34	**1.900**	48.26	**1.800**	45.72	**1.600**	40.64	See Note 1	1-147102-7
36	**2.000**	50.08	**1.900**	48.26	**1.700**	43.18	See Note 1	1-147102-8
40	**2.200**	55.88	**2.100**	53.34	**1.900**	48.26	See Note 1	2-147102-0
46	**2.500**	63.50	**2.400**	60.96	**2.200**	55.88	See Note 1	2-147102-3
50	**2.700**	68.58	**2.600**	66.04	**2.400**	60.96	See Note 1	2-147102-5
62	**3.300**	83.82	**3.200**	81.28	**3.000**	76.20	See Note 1	3-147102-1
64	**3.400**	86.36	**3.300**	83.82	**3.100**	78.74	See Note 1	3-147102-2
66	**3.500**	88.90	**3.400**	86.36	**3.200**	81.28	See Note 1	3-147102-3
70	**3.700**	95.98	**3.600**	91.44	**3.400**	86.36	See Note 1	3-147102-5
80	**4.200**	106.68	**4.100**	104.14	**3.900**	99.06	**2.100** 53.34	4-147102-0

Notes: 1. No center holddown.
2. To obtain the minimum mating post length, add .020 [0.51] (not including the post lead in chamfer) to the maximum point-of-contact dimension.

Keying Plug

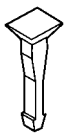

Part Number 86286-1
(Plugs into receptacle contact)

Material:

Natural color nylon

For complete product information, order Catalog 1307819

Products for Industrial & Commercial Applications

Dimensions are shown for reference purposes only.

Dimensions are in inches and millimeters unless otherwise specified. Values in brackets are metric equivalents.

Specifications subject to change.

Technical Support Center
1-800-522-6752
www.tycoelectronics.com

Mod IV Surface-Mount Receptacle Assemblies, Double-Row, .100 x .100 [2.54 x 2.54] Centerline

Vertical Mount, Top Entry with No Holddowns, End to End Stackable

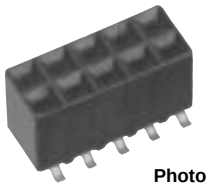

Photo 110962

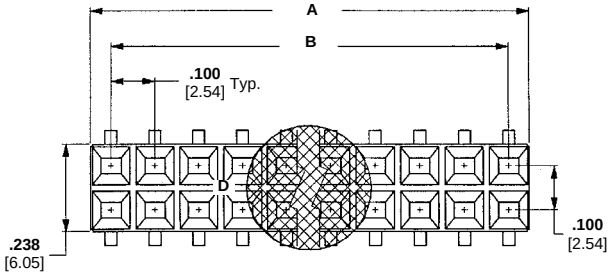

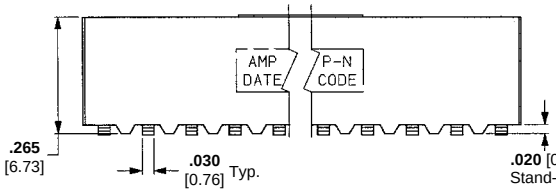

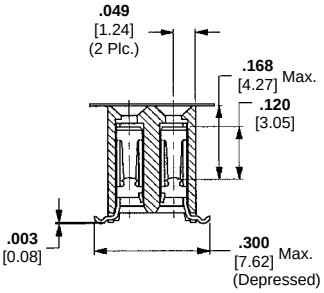

Material and Finish:

Housing—Black thermoplastic, 94V-0 rated, high temperature compatible

Contacts—Phosphor bronze, plated as follows:

Plating A—.000030 Gold contact area, .000150 tin-lead on solder area all over .000050 nickel

Related Product Data:

Mateable Headers—Refer to Mating Post Selection Guide (page 2045)

Performance Specifications—page 2101

Technical Documents: page 2160

Product Specification
108-25022

Application Specification
114-25018

Additional receptacle assembly sizes are available; minimum order quantities may apply. Consult Tyco Electronics.

No. of Positions	Dimensions		Contact Plating/Part Numbers
	A	B	Plating A
10	**.495** 12.57	**.400** 10.16	147105-5
14	**.695** 17.65	**.600** 15.24	147105-7
20	**.995** 25.27	**.900** 22.86	1-147105-0
22	**1.095** 27.81	**1.000** 25.40	1-147105-1
26	**1.295** 32.89	**1.200** 30.48	1-147105-3
30	**1.495** 37.97	**1.400** 35.56	1-147105-5
34	**1.695** 43.05	**1.600** 40.64	1-147105-7
36	**1.795** 45.59	**1.700** 43.18	1-147105-8
40	**1.995** 50.67	**1.900** 48.26	2-147105-0
46	**2.295** 58.29	**2.200** 55.88	2-147105-3
50	**2.495** 63.37	**2.400** 60.96	2-147105-5
62	**3.095** 78.61	**3.000** 76.20	3-147105-1
64	**3.195** 81.15	**3.100** 78.74	3-147105-2
66	**3.295** 83.69	**3.200** 81.28	3-147105-3
70	**3.495** 88.77	**3.400** 86.36	3-147105-5
80	**3.995** 101.47	**3.900** 99.06	4-147105-0

Notes: 1. To obtain the minimum mating post length, add .020 [0.51] (not including the post lead in chamfer) to the maximum point-of-contact dimension.
2. Tape and Reel Packaging.

For complete product information, order Catalog 1307819

Products for Industrial & Commercial Applications

Dimensions are shown for reference purposes only.

Dimensions are in inches and millimeters unless otherwise specified. Values in brackets are metric equivalents.

Specifications subject to change.

Technical Support Center
1-800-522-6752
www.tycoelectronics.com

Product Facts

- **Two-Piece reliability**
- **Two- and three-row systems available**
- **Short signal path for VLSI applications**
- **Receptacles employ dual cantilever beams and built-in anti-overstress to provide reliable connections**
- **Built-in guides provide alignment before contact engagement**
- **Closed entry receptacle housings provide lead-in ramp for positive mating of contacts**
- **Shrouded headers provide full pin protection**
- **Polarized headers**
- **Vertical headers available with ACTION PIN posts or .025 [0.64] square solder posts**
- **Repairable ACTION PIN posts**
- **Simple seating tooling for headers with ACTION PIN posts**
- **Recognized under the Component Program of Underwriters Laboratories Inc., File No. E28476**
- **Certified by Canadian Standards Association, File No. LR 7189**

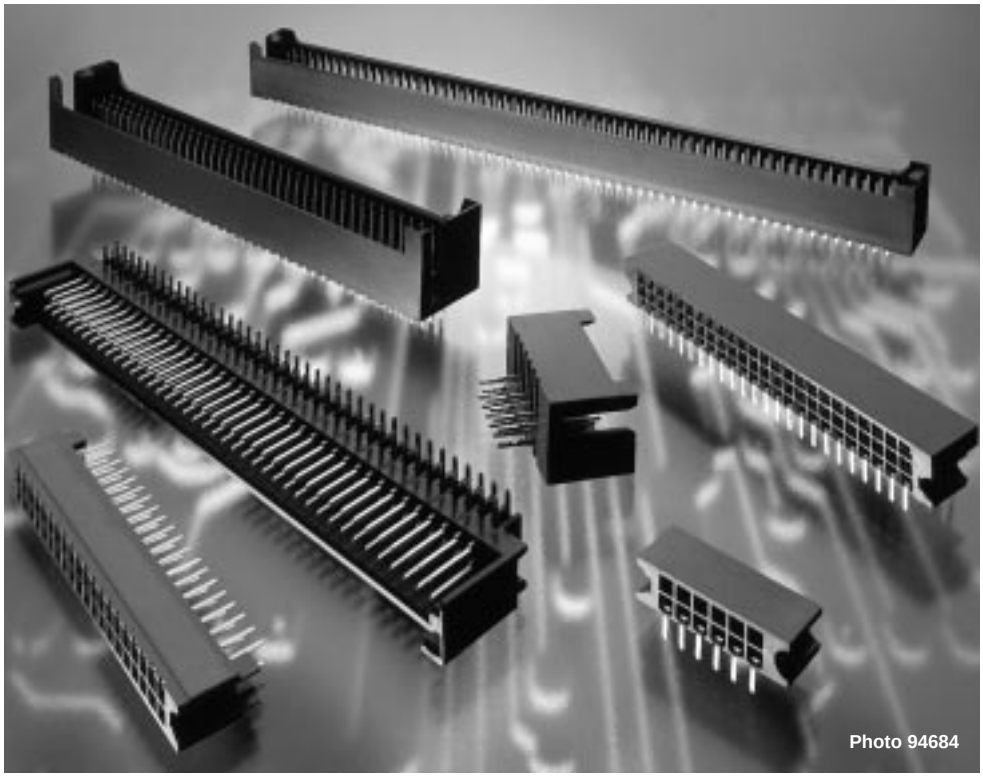

AMPMODU Two-Piece Printed Circuit Board connectors are designed to reliably and economically satisfy the packaging and interconnection requirements of today's sophisticated electronics.

The double row system is produced in 10 thru 200 positions in the vertical headers and horizontal receptacles, and 10 thru 160 positions in the right angle headers and vertical receptacles.

The AMPMODU three-row connector system is produced in 30 through 300 positions (straight post headers and mating horizontal receptacles).

Both two- and three-row vertical headers are available with press-fit ACTION PIN posts or standard .025 [0.64] square solder posts. There is a simple seating tool for headers with ACTION PIN posts.

A board retention feature is offered in the two-row horizontal receptacles, two-row right angle headers and two- and three-row vertical headers. Built-in guides promote accurate header and receptacle alignment before contact engagement.

Closed entry receptacle housings provide a lead-in ramp for positive mating of contacts.

Performance Specifications:

Current Rating — 3 amperes max. for single contact; 2 amperes max. per contact for fully energized connector

Voltage Rating — 250 VAC

Dielectric Rating — 750 VAC rms between contacts for one minute

Termination Resistance — 12 milliohms max. at 100 milliamperes test current, and 50 millivolts open circuit voltage

Insulation Resistance — 1000 megohms after temperature/humidity cycling

Temperature Rating — Headers; –65°C to +105°C (black thermoplastic housings) Receptacle Assemblies; –65°C to +125°C (brown thermoplastic housings)

Durability (Tested to) — 200 cycles for .000030 [0.00076] gold plating; 75 cycles for .000015 [0.00038] gold plating

Mating Force — 8 oz. [2.22N] maximum per contact

Unmating Force — .75 oz. [0.2N] minimum per contact during third mating cycle

For complete product information, order Catalog 1307819

Products for Industrial & Commercial Applications

Dimensions are shown for reference purposes only.

Dimensions are in inches and millimeters unless otherwise specified. Values in brackets are metric equivalents.

Specifications subject to change.

Technical Support Center
1-800-522-6752
www.tycoelectronics.com

Receptacle Assemblies, Board Mount, Double-Row, Closed Entry, .100 x .100 [2.54 x 2.54] Centerline

Horizontal Mount (with Guide Pin Slots and Standoffs)



Material and Finish:

Housing—Brown thermoplastic, 94V-0 rated, high temperature compatible

Contacts—Phosphor bronze, plated as follows:

Plating A—Duplex plated .000030 [0.00076] gold on contact area, .000050-.000100 [0.00127-0.00254] bright tin-lead on solder area, with entire contact underplated .000050 [0.00127] nickel

Plating B—Duplex plated .000015 [0.00038] gold on contact area, .000050-.000100 [0.00127-0.00254] bright tin-lead on solder area, with entire contact underplated .000050 [0.00127] nickel

Related Product Data:

Mateable Headers—pages 2110-2112

Performance Specifications—page 2106

Technical Documents: page 2160

Product Specification
108-25017

Application Specification
114-9009

Additional receptacle assembly sizes and solder tail lengths are available; minimum order quantities may apply. Consult Tyco Electronics.

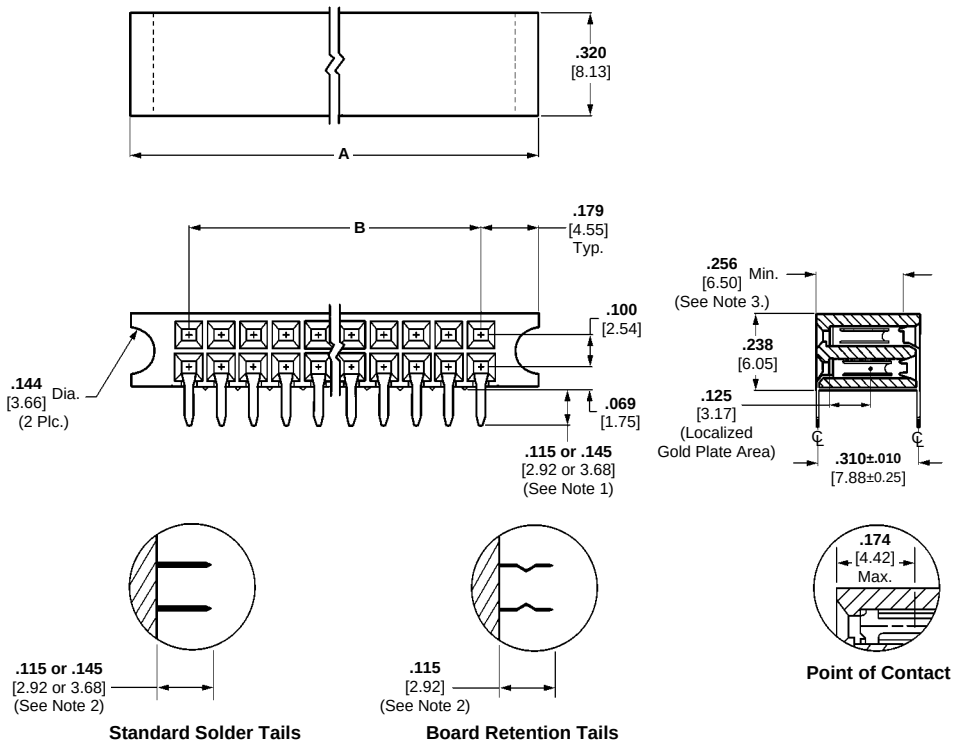

Keying Plug

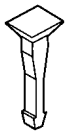

Part Number 86286-1
(Plugs into receptacle contact)

Material: Natural color nylon

No. of Positions	Dimensions A	Dimensions B	Receptacle Assembly Part Numbers with .115 [2.92] Solder Tail Lengths: Standard Solder Tails Plating A	Standard Solder Tails Plating B	Board Retention Tails Plating A	Board Retention Tails Plating B
12	**.858** 21.79	**.500** 12.70	532956-1	532955-1	534204-2	—
14	**.958** 24.33	**.600** 15.24	—	2-532955-5	—	—
16	**1.058** 26.87	**.700** 17.78	532956-2	—	1-534204-0	1-534975-5
20	**1.258** 31.95	**.900** 22.86	532956-3	532955-3	534204-9	—
24	**1.458** 37.03	**1.100** 27.94	532956-4	532955-4	1-534204-1	534975-7
30	**1.758** 44.65	**1.400** 35.56	532956-5	532955-5	534204-4	—
36	**2.058** 52.27	**1.700** 43.18	532956-6	532955-6	534204-3	—

Notes: 1. .115 [2.92] tail length is for use with .062 [1.57] PC boards; .145 [3.68] tail length is for use with .093 [2.36] PC boards.
2. Receptacle assemblies with low force contacts are available, consult Tyco Electronics.
3. .256 [6.50] minimum positive pin stop to prevent shorting between rows.

For complete product information, order Catalog 1307819

Receptacle Assemblies, Board Mount, Double-Row, Closed Entry, .100 x .100 [2.54 x 2.54] Centerline

No. of Pos.	Dimensions A		Dimensions B		Receptacle Assembly Part Nos. with .115 [2.92] Solder Tail Lengths			
					Standard Solder Tails		Board Retention Tails	
					Plating A	Plating B	Plating A	Plating B
40	**2.258**	57.35	**1.900**	48.26	532956-7	532955-7	1-534204-2	—
50	**2.758**	70.05	**2.400**	60.96	532956-8	532955-8	534204-1	1-534975-1
60	**3.258**	82.75	**2.900**	73.66	532956-9	—	534204-5	—
70	**3.758**	95.45	**3.400**	86.36	—	1-532955-0	1-534204-3	—
72	**3.858**	97.99	**3.500**	88.90	—	—	1-534204-4	—
80	**4.258**	108.15	**3.900**	99.06	1-532956-2	—	534204-8	—
100	**5.258**	133.55	**4.900**	124.46	1-532956-6	—	534204-6	—
120	**6.258**	158.95	**5.900**	149.86	1-532956-8	1-532955-8	—	—
130	**6.758**	171.65	**6.400**	162.56	2-532956-0	—	—	—

Notes: 1. .115 [2.92] tail length is for use with .062 [1.57] PC boards; .145 [3.68] tail length is for use with .093 [2.36] PC boards.
2. Receptacle assemblies with low force contacts are available, consult Tyco Electronics.
3. .256 [6.50] minimum positive pin stop to prevent shorting between rows.

Receptacle Assemblies, Board Mount, Double-Row, Closed Entry, .100 x .100 [2.54 x 2.54] Centerline

Vertical Mount (with Guide Pin Slots and Standoffs)



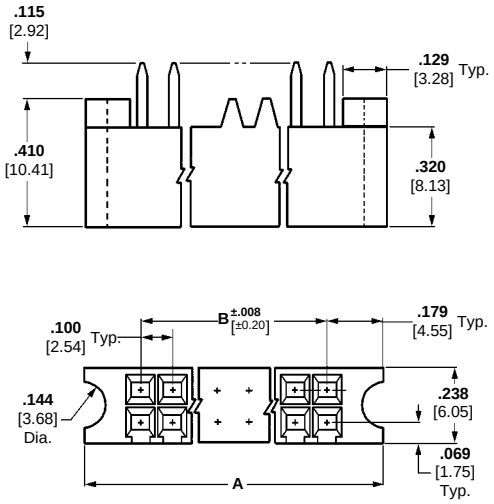

Material and Finish:

Housing—Brown thermoplastic, 94V-0 rated, high temperature compatible

Contacts—Phosphor bronze, duplex plated .000030 [0.00076] gold on contact area, .000050-.000100 [0.00127-0.00254] bright tin-lead on solder area, with entire contact underplated .000050 [0.00127] nickel

Related Product Data:

Mateable Headers—pages 2110-2112

Performance Specifications—page 2106

Technical Documents: page 2160

Product Specification
108-25017

Application Specification
114-9009

Additional receptacle assembly sizes and solder tail lengths are available; minimum order quantities may apply. Consult Tyco Electronics.

No. of Positions	Dimensions A	Dimensions B	Receptacle Assembly Part Numbers
50	**2.758** 70.05	**2.400** 60.96	534972-3

Keying Plug

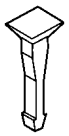

Part Number 86286-1
(Plugs into receptacle contact)

Material:

Natural color nylon

For complete product information, order Catalog 1307819

Products for Industrial & Commercial Applications
Dimensions are shown for reference purposes only.
Dimensions are in inches and millimeters unless otherwise specified. Values in brackets are metric equivalents.
Specifications subject to change.
Technical Support Center
1-800-522-6752
www.tycoelectronics.com

Headers, Straight Post, Double-Row, .100 x .100 [2.54 x 2.54] Centerline

Solder Posts and ACTION PIN Posts (with Pin Protection and Guide Pins)



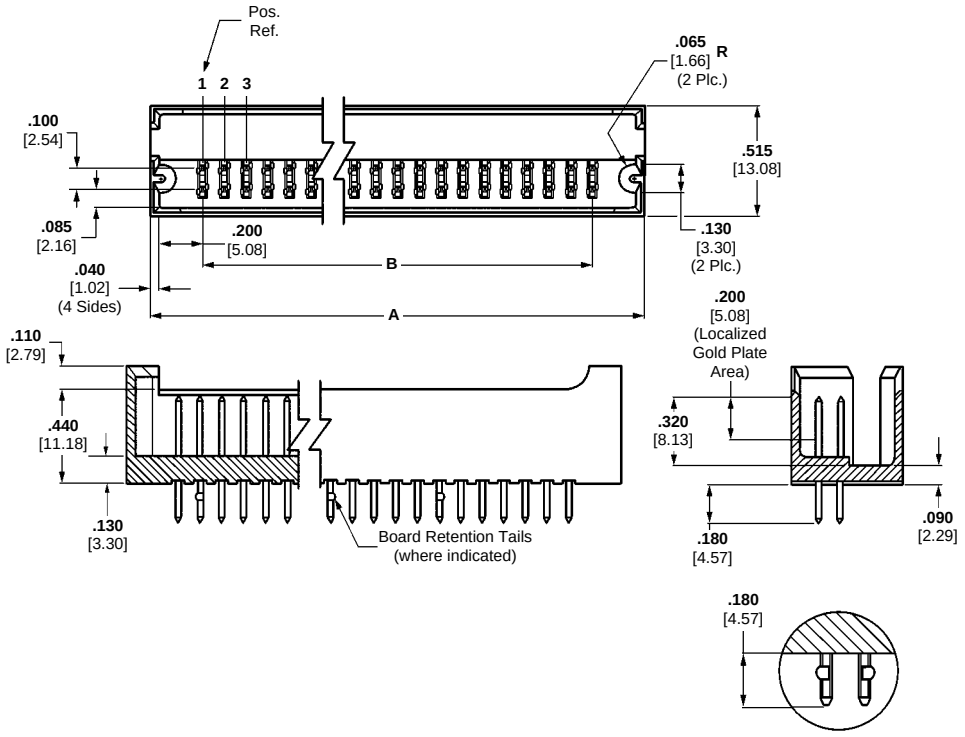

.025 [0.64] Square Board Retention Tails

Material and Finish:

Housing—Black thermoplastic, 94V-0 rated

Posts—Phosphor bronze, plated as follows:

Plating A—Duplex plated .000030 [0.00076] gold on contact area, .000100-.000200 [0.00254-0.00508] bright tin-lead on termination end, with entire post underplated .000050 [0.00127] nickel

Plating B—Duplex plated .000015 [0.00038] gold on contact area, .000100-.000200 [0.00254-0.00508] bright tin-lead on termination end, with entire post underplated .000050 [0.00127] nickel

Plating C—Selectively plated .000030 [0.00076] gold on contact area and .000015 [0.00038] gold on termination end, with gold flash over .000050 [0.00127] nickel on entire post

Related Product Data:

Mateable Receptacles—pages 2107-2109

Performance Specifications—page 2106

Application Tooling—pages 2086

Technical Documents: page 2160

Product Specification
108-25016, 108-25017

Application Specification
114-9009

Additional header sizes are available; minimum order quantities may apply. Consult Tyco Electronics.

No. of Positions	Dimensions A		Dimensions B		Header Part Numbers with .180 [4.57] Tail Length: Standard Solder Tails Plating A	Standard Solder Tails Plating B	Board Retention Tails Plating A	Board Retention Tails Plating B
12	**.980**	24.89	**.500**	12.70	102692-1	102567-1	—	534257-5
14	**1.080**	27.43	**.600**	15.24	—	2-102567-3	—	—
16	**1.180**	29.97	**.700**	17.78	1-102692-5	—	—	—
20	**1.380**	35.05	**.900**	22.86	—	1-102567-1	534978-3	—
24	**1.580**	40.13	**1.100**	27.94	102692-2	102567-2	534978-4	—
30	**1.880**	47.75	**1.400**	35.56	1-102692-7	1-102567-3	534978-5	—
36	**2.180**	55.37	**1.700**	43.18	102692-3	102567-3	534978-6	—
40	**2.380**	60.45	**1.900**	48.26	1-102692-3	1-102567-2	534978-7	—
50	**2.880**	73.15	**2.400**	60.96	—	102567-6	534978-8	—
60	**3.380**	85.85	**2.900**	73.66	102692-5	102567-4	534978-9	—
70	**3.880**	98.55	**3.400**	86.36	—	—	1-534978-5	—
80	**4.380**	111.25	**3.900**	99.06	—	102567-8	1-534978-1	—

Note: Headers with make first/break last posts can be made available, consult Tyco Electronics.

For complete product information, order Catalog 1307819

Products for Industrial & Commercial Applications

Dimensions are shown for reference purposes only.

Dimensions are in inches and millimeters unless otherwise specified. Values in brackets are metric equivalents.

Specifications subject to change.

Technical Support Center
1-800-522-6752
www.tycoelectronics.com

Headers, Straight Post, Double-Row, .100 x .100 [2.54 x 2.54] Centerline

Solder Posts and ACTION PIN Posts (with Pin Protection and Guide Pins)



No. of Positions	Dimensions A	Dimensions B	Header Part Numbers with .180 [4.57] Tail Length: Standard Solder Tails, Plating A	Header Part Numbers with .180 [4.57] Tail Length: Board Retention Tails, Plating A
100	**5.380** 136.65	**4.900** 124.46	102692-8	—
110	**5.880** 149.35	**5.400** 137.16	—	1-534978-2

Note: Headers with make first/break last posts can be made available, consult Tyco Electronics.

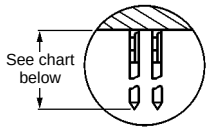

.025 [0.64] Square ACTION PIN Tails

ACTION PIN Post Replacement Part Nos.

.250 [6.35] Tail Length

Plating A	102824-9
Plating B	1-102824-0

.480 [12.19] Tail Length

Plating A	102824-6
Plating B	102824-2
Plating C	102824-3

.680 [17.27] Tail Length

Plating C	102824-7

No. of Positions	Dimensions A	Dimensions B	Header Part Numbers with ACTION PIN Posts: .250 [6.35] Tail Length, Plating A
12	**.980** 24.89	**.500** 12.70	102690-1
60	**3.380** 85.85	**2.900** 73.66	102690-5
80	**4.380** 111.25	**3.900** 99.06	102690-6
100	**5.380** 136.65	**4.900** 124.46	102690-8

Notes: 1. Other header sizes can be made available upon request.
Headers with ACTION PIN posts are for use with .093 [2.36] nominal or thicker PC boards.
2. Application tooling for installing headers with ACTION PIN posts is shown on pages 110 and 111.
3. Headers with .250 [6.35] tail length can be made available with make first/break last contacts, consult Tyco Electronics.

Material and Finish:

Housing—Black thermoplastic, 94V-0 rated

Posts—Phosphor bronze, plated as follows:

Plating A—Duplex plated .000030 [0.00076] gold on contact area, .000100-.000200 [0.00254-0.00508] bright tin-lead on termination end, with entire post underplated .000050 [0.00127] nickel

Related Product Data:

Mateable Receptacles—pages 2107-2109

Performance Specifications—page 2106

Application Tooling—pages 2086

Technical Documents: page 2160

Product Specification
108-25016, 108-25017

Application Specification
114-9009

Additional header sizes are available; minimum order quantities may apply. Consult Tyco Electronics.

Headers, Right-Angle Post, Double-Row, .100 x .100 [2.54 x 2.54] Centerline

Card Extender (with Pin Protection and Guide Pins)



Material and Finish:

Housing—Black thermoplastic, 94V-0 rated

Posts—Phosphor bronze, plated as follows:

Plating A—Duplex plated .000030 [0.00076] gold on contact area, .000100-.000200 [0.00254-0.00508] bright tin-lead on solder area, with entire post underplated .000050 [0.00127] nickel

Plating B—Duplex plated .000015 [0.00038] gold on contact area, .000100-.000200 [0.00254-0.00508] bright tin-lead on solder area, with entire post underplated .000050 [0.00127] nickel

Related Product Data:

Mateable Receptacles—pages 2107-2109

Performance Specifications—page 2106

Technical Documents: page 2160

Product Specification
108-25017

Application Specification
114-9009

Additional header sizes are available; minimum order quantities may apply. Consult Tyco Electronics.

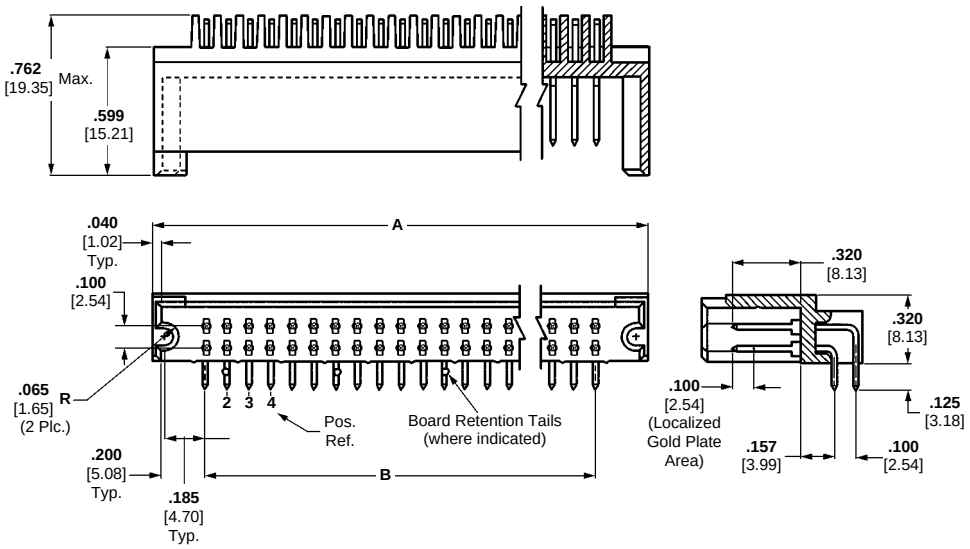

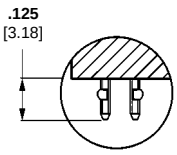

.025 [0.64] Square
Board Retention Tails

No. of Positions	Dimensions		Header Part Numbers with .125 [3.18] Tail Length		
			Standard Solder Tails		Board Retention Tails
	A	B	Plating A	Plating B	Plating A
16	**1.180** 29.97	**.700** 17.78	1-102802-4	—	534245-4
20	**1.380** 35.05	**.900** 22.86	1-102802-5	1-102589-2	—
24	**1.580** 40.13	**1.100** 27.94	1-102802-3	102589-6	—
30	**1.880** 47.75	**1.400** 35.56	1-102802-6	—	534245-2
40	**2.380** 60.45	**1.900** 48.26	102802-8	1-102589-3	—
50	**2.880** 73.15	**2.400** 60.96	102802-4	102589-5	—

Note: Headers with make first/break last posts can be made available, consult Tyco Electronics.

For complete product information, order Catalog 1307819

Products for Industrial & Commercial Applications

Dimensions are shown for reference purposes only.

Dimensions are in inches and millimeters unless otherwise specified. Values in brackets are metric equivalents.

Specifications subject to change.

Technical Support Center
1-800-522-6752
www.tycoelectronics.com

Accessories: End Shrouds for Machine-Applied Posts

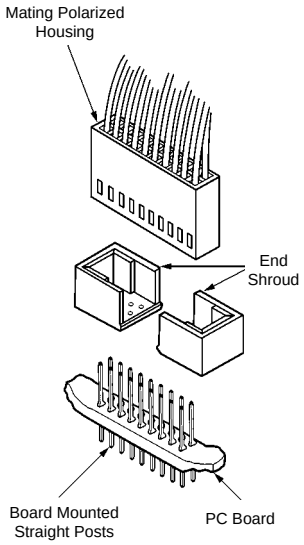

Typical Assembly

Technical Documents: page 2160

Single-Row, .100 [2.54] Centers

Part Number 102338-1

Material:

Black thermoplastic, flame retardant

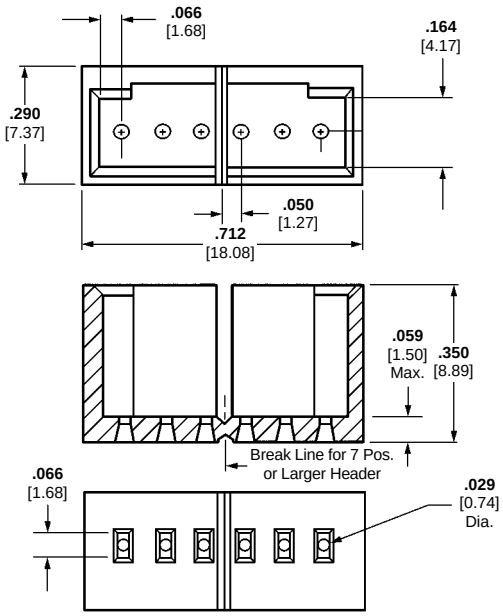

Double-Row, .100 x .100 [2.54 x 2.54] Centers

Part Number 102114-1

Material:

Black glass-filled polyester

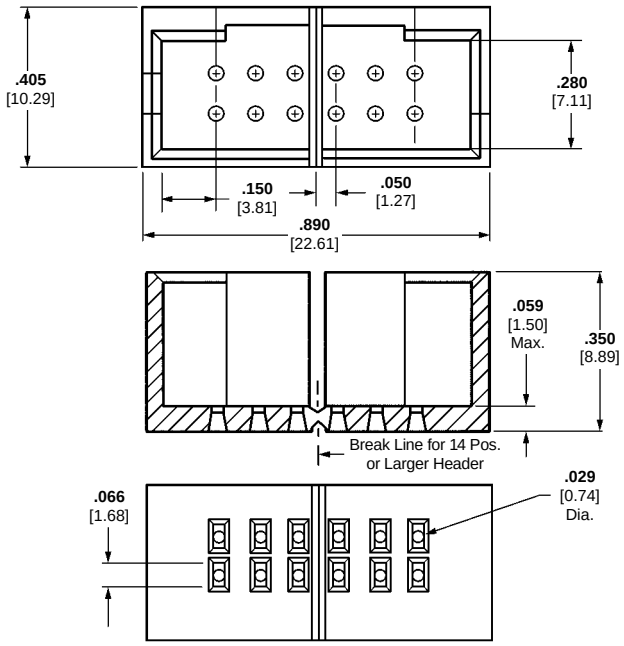

For complete product information, order Catalog 1307819

Products for Industrial & Commercial Applications
Dimensions are shown for reference purposes only.
Dimensions are in inches and millimeters unless otherwise specified. Values in brackets are metric equivalents.
Specifications subject to change.
Technical Support Center
1-800-522-6752
www.tycoelectronics.com

Accessories: Barrier Insert, Part Number 87743-1

Material:
Black polyester

The barrier insert can be used on double row headers (.100 x .100 [2.54 x 2.54] centers), including shrouded versions—3 and 4 sides, as well as unshrouded straight post headers. With one barrier insert several configurations can be obtained, providing headers with capabilities of accepting various combinations of polarized and non-polarized AMPMODU connectors.

For unshrouded headers, the barrier insert is used to establish polarization and to compartmentalize the header. For shrouded headers, the barrier insert is used to compartmentalize the header, while maintaining polarization. The barrier insert itself is notched to facilitate cutting off the ends with a simple tool such as tin snips or scissors to achieve the desired configuration.

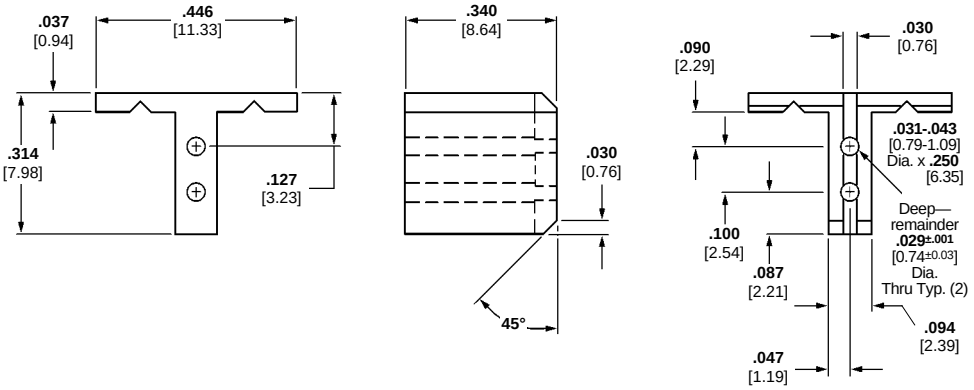

Barrier Insert Cutoffs

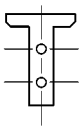

Fig. 1
Partial Cutoff
(Left and Right Sides)

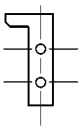

Fig. 2
Partial Cutoff
(Left Side)
Complete Cutoff
(Right Side)

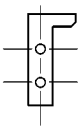

Fig. 3
Complete Cutoff
(Left Side)
Partial Cutoff
(Right Side)

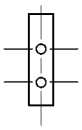

Fig. 4
Complete Cutoff
(Left and Right Sides)

Typical Barrier Insert Applications

For Unshrouded Double-Row, Straight Post Headers, .100 x .100 [2.54 x 2.54] Centers

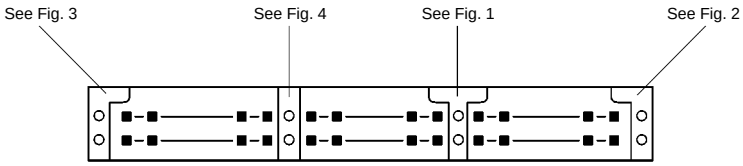

Note: All configurations of barrier inserts compartmentalize headers and maintain polarization, except bar (Fig. 4) configuration, which is used primarily for compartmentalizing headers.

For Shrouded Double-Row, 3 and 4 Sided Headers, .100 x .100 [2.54 x 2.54] Centers

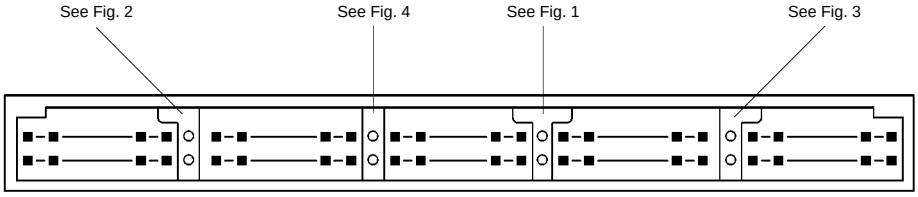

Note: Right-angle (Figs. 2 and 3) and "T" (Fig. 1) configurations of barrier insert establish polarization; bar (Fig. 4) configuration of barrier insert compartmentalizes header.

For complete product information, order Catalog 1307819

Products for Industrial & Commercial Applications
Dimensions are shown for reference purposes only.
Dimensions are in inches and millimeters unless otherwise specified. Values in brackets are metric equivalents.
Specifications subject to change.
Technical Support Center
1-800-522-6752
www.tycoelectronics.com

Accessories: Snap-In Polarizer for Low Profile Headers

Material:
Black thermoplastic, flame retardant

Part Numbers
499991-2 (Packaged 50 per bag)
499991-3 (Packaged 1000 per bag)

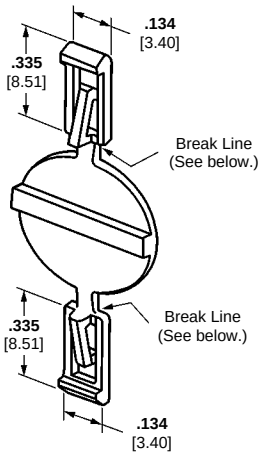

The snap-in polarizer provides military polarization for low profile headers. Installation of the polarizer is as follows:

Orient the polarizer so that the polarizer latch is on the same side as the inner wall (post side) of the header housing.

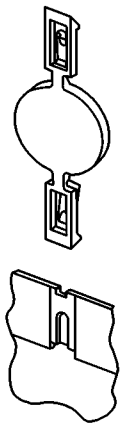

Slide the polarizer over the polarizing slot of the housing until the latch engages the hole. Snap off the tab at the break line next to the housing. Using the remaining polarizer, repeat the process for the other housing location.

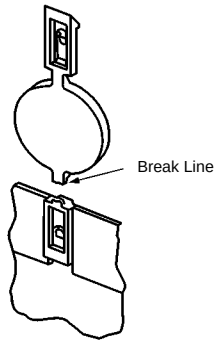

Note: For Post Shunts, contact Tyco Electronics.

For complete product information, order Catalog 1307819

Products for Industrial & Commercial Applications
Dimensions are shown for reference purposes only.
Dimensions are in inches and millimeters unless otherwise specified. Values in brackets are metric equivalents.
Specifications subject to change.
Technical Support Center
1-800-522-6752
www.tycoelectronics.com

Mod IV Wire-Applied Contacts and Housings

Product Facts

- **Terminates 32-20 AWG [0.03-0.6mm^2] discrete wire**
- **Contacts have insulation support**
- **Choice of three contact mating pressures**
- **Available in a variety of gold and tin platings**
- **Receptacles mate with .025 [0.64] square or round posts**
- **Dual cantilever contact beam with built-in anti-overstress feature for reliable matings**
- **Housings accept a variety of receptacle and pin contacts**
- **Housing sizes range up to 100 positions**
- **Housing configurations include single- and double-rows on .100 [2.54] centerlines**
- **Housing options include detent latching, polarization and bonded strain relief/ pull tabs**
- **Recognized under the Component Program of Underwriters Laboratories Inc., File No. E28476**
- **Certified by Canadian Standards Association, File No. LR 7189**

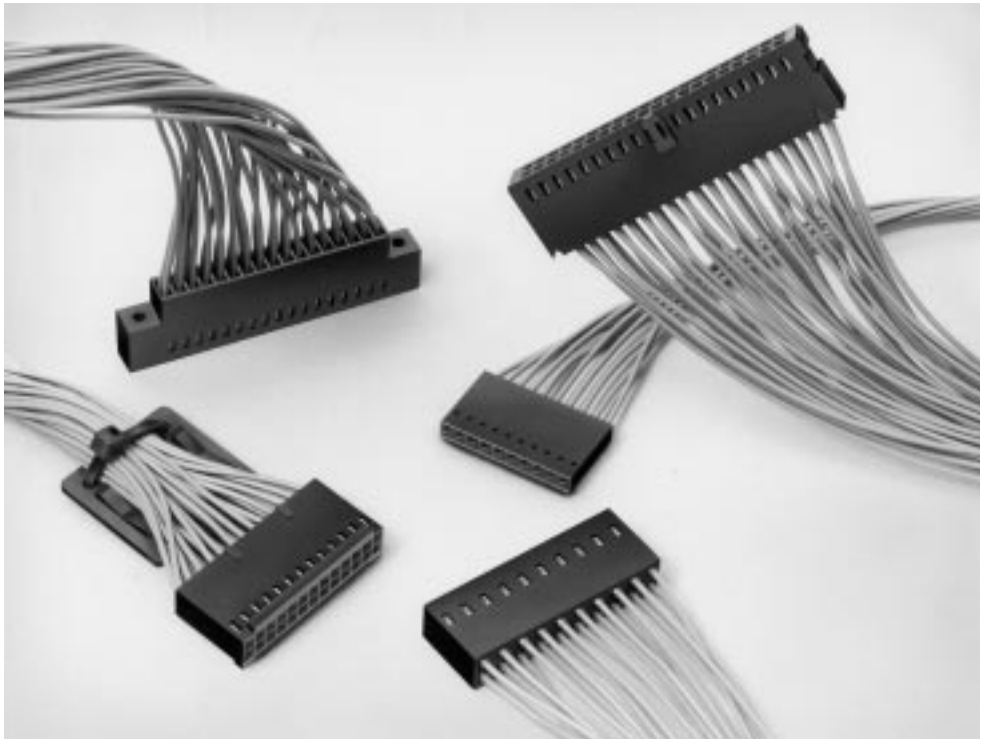

Performance Characteristics:

Contact Current Rating—3 amperes

Termination Resistance:

12 milliohms (max.)—Beryllium copper contacts

20 milliohms (max.)—Copper-tin-phosphor bronze contacts

Durability—Ref. AMP Product Specification 108-25020

Mod IV Pin and Receptacle Contacts

Crimp Snap-In (No-strip) Receptacles and Crimp Snap-In Pins with Insulation Support (Standard Pressure)

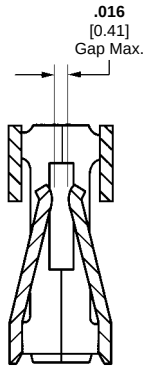

Standard Pressure Configuration

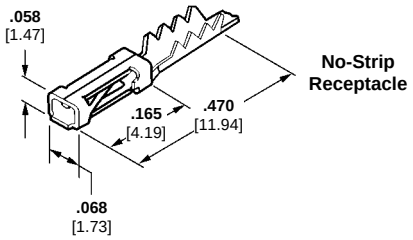

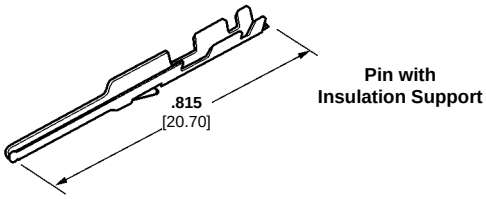

Crimp Snap-In (No-strip) Receptacles

Ins. Dia. Range	Finish	Part Numbers		Heavy Duty Miniature Applicator No. for AMP-O-LECTRIC Machine*	Hand Tool Part Number
		Strip Form	Loose Piece		
·**040-.055** 1.02-1.40	Plating A	—	102348-2	567307-2	90381-1
	Plating C	87107-6	102348-3		

Crimp Snap-In Pins with Insulation Support

Wire Size Range		Ins. Dia. (Max.)	Finish	Part Numbers		Heavy Duty Miniature Applicator No. for AMP-O-LECTRIC Machine*	Hand Tool Part Number	
AWG	[mm²]			Strip Form	Loose Piece		Premium	Commercial
26-22	0.12-0.4	**.061** 1.55	Plating A	—	102107-2	466812-2	90418-1	58641-1†
			Plating B	102095-2	102107-1			
			Plating C	102095-4	102107-3			

*For use with Model "K" machines. Call the Technical Support Center (1-800-522-6752) for part nos. of applicators for use with the Model "G" machines (shown on page 261), as well as other bench machines and fully automatic AMPOMATOR lead making machines.
†PRO-CRIMPER II hand tool frame with die set assembly.
Die Set Part Number 58641-2

Material and Finish:

Beryllium copper or phosphor bronze (see charts), plated as follows:

Plating A—Selectively plated .000030 [0.00076] gold on contact area, with gold flash over .000050 [0.00127] nickel on entire contact

Plating B—Selectively plated .000015 [0.00038] gold on contact area, with gold flash over .000050 [0.00127] nickel on entire contact

Plating C—.000100-.000200 [0.00254-0.00508] bright tin-lead over .000030 [0.00076] nickel on entire contact

Related Product Data:

Housings Used With—
pages 2120-2125

Performance Characteristics—
page 2117

Application Tooling—
page 2159

Technical Documents: pages 2160, 2161

Product Specification
108-25007, 208-25019, 108-25020, 108-25021

Application Specification
114-25003, 114-25016

Additional header sizes are available; minimum order quantities may apply. Consult Tyco Electronics.

Mod IV Receptacle Contacts

Crimp Snap-In Receptacles with Insulation Support (Standard, Intermediate and High Pressure)

Material and Finish:

Beryllium copper, phosphor bronze or copper-tin-phosphor bronze (see charts, page 139), plated as follows:

Plating A—Duplex plated .000030 [0.00076] gold on contact area, .000100-.000200 [0.00254-0.00508] tin-lead on crimp area, with entire contact underplated .000050 [0.00127] nickel

Plating B—Duplex plated .000015 [0.00038] gold on contact area, .000100-.000200 [0.00254-0.00508] tin-lead in crimp area, with entire contact underplated .000050 [0.00127] nickel

Plating C—Selectively plated .000075 [0.00191] gold on contact area, with gold flash over .000050 [0.00127] nickel on entire contact

Plating D—Selectively plated .000050 [0.00127] gold on contact area, with gold flash over .000050 [0.00127] nickel on entire contact

Plating E—Selectively plated .000030 [0.00076] gold on contact area, with gold flash over .000050 [0.00127] nickel on entire contact

Plating F—Selectively plated .000015 [0.00038] gold on contact area, with gold flash over .000050 [0.00127] nickel on entire contact

Plating G—.000100-.000200 [0.00254-0.00508] bright tin-lead over .000030 [0.00076] nickel on entire contact

Related Product Data:

Housings Used With—
pages 2120-2125

Performance Characteristics—
page 2117

Application Tooling—
page 2159

Technical Documents: pages 2160, 2161

Product Specification
108-25007, 208-25019, 108-25020, 108-25021

Application Specification
114-25003, 114-25016

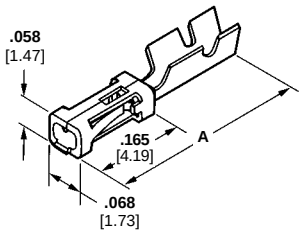

Standard Pressure

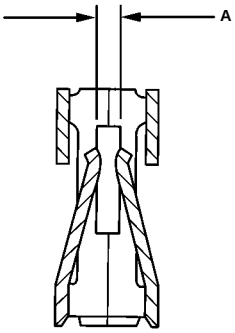

Intermediate Pressure

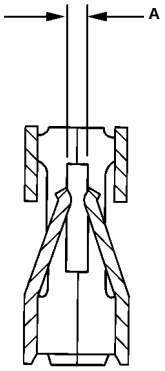

High Pressure

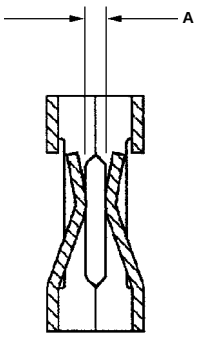

	Mating Force	Unmating Force	A-Gap Dimension
Standard Pressure	9 oz. Max.	1.5 oz. Min.	.008/.014
Intermediate Pressure	16 oz. Max.	2 oz. Min.	.008/.014
High Pressure	20 oz. Max.	3 oz. Min.	.013±.002

For complete product information, order Catalog 1307819

Products for Industrial & Commercial Applications

Dimensions are shown for reference purposes only.

Dimensions are in inches and millimeters unless otherwise specified. Values in brackets are metric equivalents.

Specifications subject to change.

Technical Support Center
1-800-522-6752
www.tycoelectronics.com

Mod IV Receptacle Contacts

Standard Pressure (Mod IV)

Wire Size Range AWG	Wire Size Range [mm²]	Ins. Dia. (Max.)	Dimension A	Material	Finish	Part Numbers Strip Form	Part Numbers Loose Piece	Heavy Duty Miniature Applicator for AMP-O-LECTRIC Machine*	Applicator for Stripper/ Crimper Machine	Hand Tool Part Numbers Premium	Hand Tool Part Numbers Commercial
32-27	0.03-0.1	**.040** 1.02	**.445** 11.30	Cu-Sn-Ph Bz	Plating A	102316-8	1-102316-4	466655-2	466921-1	90417-1	—
				Cu-Sn-Ph Bz	Plating B	102316-6	1-102316-3				
				Be Cu	Plating D	1-102917-1	1-102917-2				
				Be Cu	Plating E	102917-1	102917-2				
				Be Cu	Plating F	102917-5	—				
				Cu-Sn-Ph Bz	Plating G	102316-5	—				
26-22	0.12-0.4	**.061** 1.55	**.445** 11.30	Cu-Sn-Ph Bz	Plating F	87523-4	—	466571-2	466918-1	90418-1	58641-1†
				Cu-Sn-Ph Br	Plating G	87756-6	87756-7				
				Be Cu	Plating D	1-87666-6	87667-5				
				Be Cu	Plating E	87666-2	87667-2				
				Be Cu	Plating F	87666-5	87667-5				
				Be Cu	Plating G	87666-3	87667-3				
24-20	0.2-0.6	**.069** 1.75	**.470** 11.94	Cu-Sn-Ph Bz	Plating A	1-87523-8	1-87523-9	466562-2	466905-1	90202-2	—
				Cu-Sn-Ph Bz	Plating B	1-87523-5	1-87523-6				
				Be Cu	Plating E	85969-8	86016-2				
				Be Cu	Plating F	85969-6	86016-5				
				Be Cu	Plating G	85969-9	86016-3				

Intermediate Pressure (Mod IV.v)

Wire Size Range AWG	Wire Size Range [mm²]	Ins. Dia. (Max.)	Dimension A	Material	Finish	Part Numbers Strip Form	Part Numbers Loose Piece	Heavy Duty Miniature Applicator for AMP-O-LECTRIC Machine*	Applicator for Stripper/ Crimper Machine	Hand Tool Part Numbers Premium	Hand Tool Part Numbers Commercial
26-22	0.12-0.4	**.061** 1.55	**.445** 11.30	Cu-Sn-Ph Bz	Plating B	103171-1	103171-2	466571-2	466918-1	90418-1	58641-1†
				Be Cu	Plating F	102548-1	102548-3				
24-20	0.2-0.6	**.069** 1.75	**.470** 11.94	Be Cu	Plating E	—	87046-2	466562-2	466905-1	90202-2	—
				Cu-Sn-Ph Bz	Plating A	2-87195-0	2-87195-1				
				Be Cu	Plating F	86492-2	87046-1				
				Be Cu	Plating G	86492-9	87046-4				

High Pressure (Mod V)**

Wire Size Range AWG	Wire Size Range [mm²]	Ins. Dia. (Max.)	Dimension A	Material	Finish	Part Numbers Strip Form	Part Numbers Loose Piece	Heavy Duty Miniature Applicator for AMP-O-LECTRIC Machine*	Applicator for AMP-O-MATIC Stripper/Crimper Machine	Hand Tool Part Numbers
32-27	0.03-0.1	**.040** 1.02	**.445** 11.30	Ph Bz	Plating E	103455-1	103455-2	466655-2	466921-1	90417-1
26-22	0.12-0.4	**.061** 1.55	**.445** 11.30	Ph Bz	Plating E	87809-1	102128-1	466571-2	466918-1	90418-1
24-20	0.2-0.6	**.069** 1.75	**.470** 11.94	Ph Bz	Plating G	87309-8	1-87309-3	466562-2	466905-1	90202-2

*For use with Model "K" machines. Call the Technical Support Center (1-800-522-6752) for part numbers of applicators for use with the Model "G" machines (shown on page 2159), as well as other bench machines and fully automatic AMPOMATOR lead making machines.
**Contact material is phosphor bronze.
†PRO-CRIMPER II hand tool frame with die set assembly.
Die Set Part Number 58641-2

Mod IV Wire-Applied Housings, Single-Row, .100 [2.54] Centerline

Non-Polarized



Material:

Black thermoplastic, flame retardant

Related Product Data:

Contacts—pages 2117-2119
Mateable Headers and Posts—pages 2048, 2049, 2053-2055

Technical Documents: page 2160

Product Specification
108-25007, 208-25019, 108-25020, 108-25021
Application Specification
114-25003, 114-25016

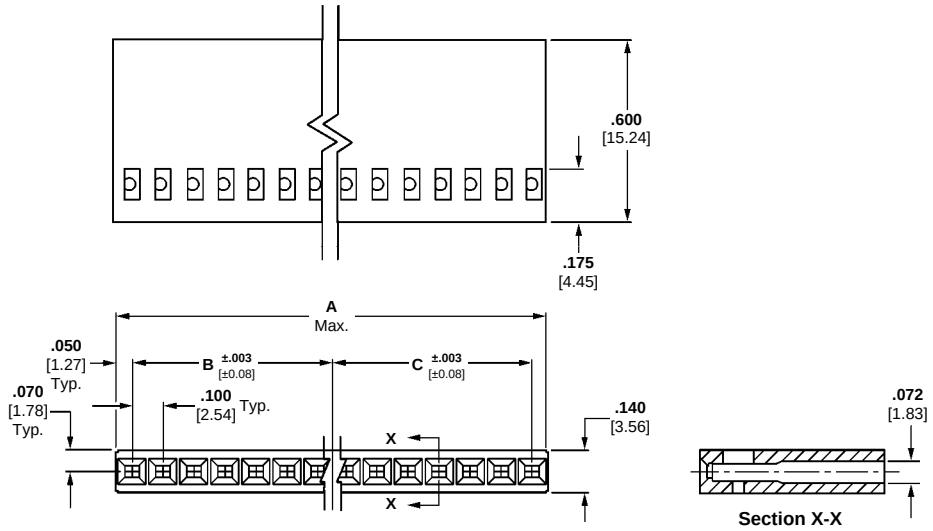

No. of Positions	Dimensions A	B	C	Part Number Stamped*	Unstamped**
1	**.105** 2.67	—	—	—	7-87499-2
2	**.205** 5.21	**.100** 2.54	—	—	87499-4
3	**.305** 7.75	**.100** 2.54	**.100** 2.54	—	87499-6
4	**.405** 10.29	**.200** 5.08	**.100** 2.54	—	87499-8
5	**.505** 12.83	**.200** 5.08	**.200** 5.08	87499-9	1-87499-0
6	**.605** 15.37	**.300** 7.62	**.200** 5.08	1-87499-1	—
7	**.705** 17.91	**.300** 7.62	**.300** 7.62	87499-1	87499-2
8	**.805** 20.45	**.400** 10.16	**.300** 7.62	1-87499-3	—
9	**.905** 22.99	**.400** 10.16	**.400** 10.16	1-87499-5	1-87499-6
10	**1.005** 25.53	**.500** 12.70	**.400** 10.16	1-87499-7	1-87499-8
11	**1.105** 28.01	**.500** 12.70	**.500** 12.70	1-87499-9	—
12	**1.205** 30.61	**.600** 15.24	**.500** 12.70	2-87499-1	—
13	**1.305** 33.15	**.600** 15.24	**.600** 15.24	2-87499-3	—
14	**1.405** 35.69	**.700** 17.78	**.600** 15.24	2-87499-5	—
15	**1.505** 38.23	**.700** 17.78	**.700** 17.78	2-87499-7	—
16	**1.605** 40.77	**.800** 20.32	**.700** 17.78	2-87499-9	—
20	**2.005** 50.93	**1.000** 25.40	**.900** 22.86	3-87499-7	—
36	**3.600** 91.44	**1.800** 45.72	**1.700** 43.18	—	7-87499-0

*Cavity identification, part number and date code stamped on housing where size permits.
**No marking on housing.
Notes: 1. Strain reliefs are available and may be purchased separately. Consult Tyco Electronics.
2. Contact **Extraction/Lance Reset Tool No. 843996-3.**

Keying Plugs

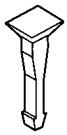

Part Number 86286-1
(Plugs into standard or intermediate pressure receptacle contact)

Material:

Natural color nylon

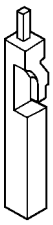

Part Number 87077-2
(Plugs directly into housing)

For complete product information, order Catalog 1307819

Products for Industrial & Commercial Applications

Dimensions are shown for reference purposes only.

Dimensions are in inches and millimeters unless otherwise specified. Values in brackets are metric equivalents.

Specifications subject to change.

Technical Support Center
1-800-522-6752
www.tycoelectronics.com

Mod IV Wire-Applied Housings, Single-Row, .100 [2.54] Centerline

Polarized (with Detent Latching)



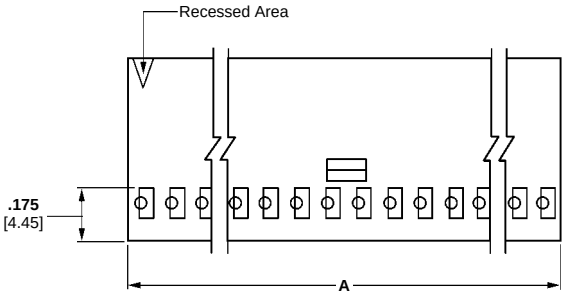

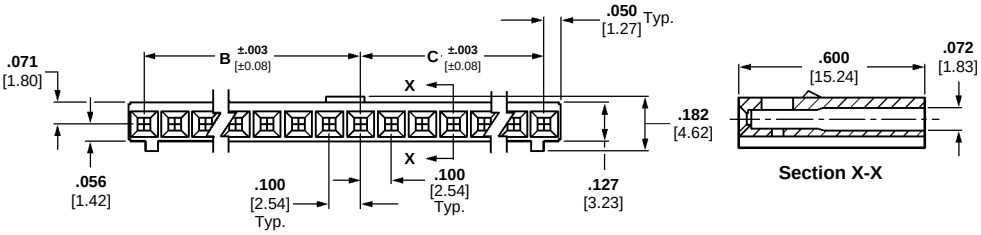

Material:

Black thermoplastic, flame retardant

Related Product Data:

Contacts—pages 2117-2119

Mateable Headers and Posts—pages 2071, 2072

Flexible Film Connectors, Single-Row Pin Assemblies—Catalog 82007

Technical Documents: pages 2160, 2161

Product Specification
108-25007, 208-25019, 108-25020, 108-25021

Application Specification
114-25003, 114-25016

No. of Position	Dimensions A	B	C	Part Numbers Unstamped*
3	**.300** 7.62	**.100** 2.54	**.100** 2.54	102241-1
4	**.400** 10.16	**.200** 5.08	**.100** 2.54	102241-2
5	**.500** 12.70	**.200** 5.08	**.200** 5.08	102241-3
6	**.600** 15.24	**.300** 7.62	**.200** 5.08	102241-4
7	**.700** 17.78	**.300** 7.62	**.300** 7.62	102241-5
8	**.800** 20.32	**.400** 10.16	**.300** 7.62	102241-6
9	**.900** 22.86	**.400** 10.16	**.400** 10.16	102241-7
10	**1.000** 25.40	**.500** 12.70	**.400** 10.16	102241-8
12	**1.200** 30.48	**.600** 15.24	**.500** 12.70	1-102241-0
14	**1.400** 35.56	**.700** 17.78	**.600** 15.24	1-102241-2
16	**1.600** 40.64	**.800** 20.32	**.700** 17.78	1-102241-4
18	**1.800** 45.72	**.900** 22.86	**.800** 20.32	1-102241-6
20	**2.000** 50.80	**1.000** 25.40	**.900** 22.86	1-102241-8
36	**3.600** 91.44	**1.800** 45.72	**1.700** 43.18	3-102241-4

*No marking on housing.
Note: Contact **Extraction/Lance Reset Tool No. 843996-3.**

Keying Plugs

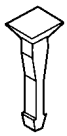

Part Number 86286-1
(Plugs into standard or intermediate pressure receptacle contact)

Material:

Natural color nylon

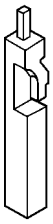

Part Number 87077-2
(Plugs directly into housing)

For complete product information, order Catalog 1307819

Products for Industrial & Commercial Applications

Dimensions are shown for reference purposes only.

Dimensions are in inches and millimeters unless otherwise specified. Values in brackets are metric equivalents.

Specifications subject to change.

Technical Support Center
1-800-522-6752
www.tycoelectronics.com

Mod IV Wire-Applied Housings, Double-Row, .100 x .100 [2.54 x 2.54] Centerline

Non-Polarized



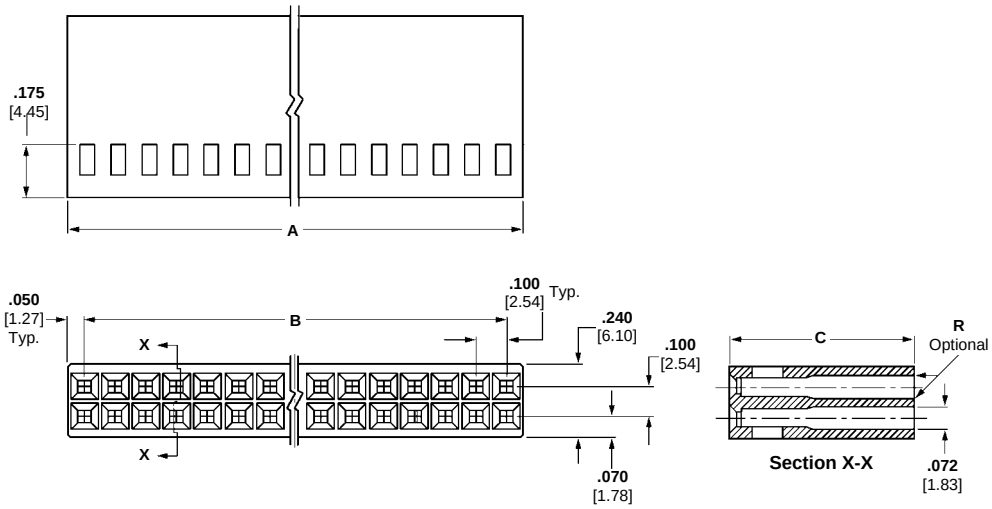

Material:

Black thermoplastic, flame retardant

Related Product Data:

Contacts—pages 2117-2118

Mateable Headers and Posts—pages 2050, 2051, 2056-2058, 2073, 2074

Technical Documents: pages 2160, 2161

Product Specification
108-25007, 208-25019, 108-25020, 108-25021

Application Specification
114-25003, 114-25016

No. of Positions	Dimensions A	Dimensions B	Part Numbers C = .600 [15.24] Stamped*	Part Numbers C = .600 [15.24] Unstamped**
2	**.100** 2.54	—	—	5-87456-3
4	**.200** 5.08	**.100** 2.54	—	4-87456-9
6	**.300** 7.62	**.200** 5.08	87456-2	87456-1
8	**.400** 10.16	**.300** 7.62	—	87456-3
10	**.500** 12.70	**.400** 10.16	87456-6	—
12	**.600** 15.24	**.500** 12.70	87456-8	—
14	**.700** 17.78	**.600** 15.24	1-87456-0	—
16	**.800** 20.32	**.700** 17.78	—	1-87456-1
18	**.900** 22.86	**.800** 20.32	1-87456-4	1-87456-3
20	**1.000** 25.40	**.900** 22.86	1-87456-6	—
24	**1.200** 30.48	**1.100** 27.94	2-87456-0	1-87456-9
26	**1.300** 33.02	**1.200** 30.48	2-87456-2	2-87456-1
30	**1.500** 38.10	**1.400** 35.56	2-87456-6	2-87456-5
40	**2.000** 50.80	**1.900** 48.26	3-87456-6	—

*Cavity identification, AMP, part number and date code stamped on housing where size permits.
**No marking on housing.
Notes: 1. Strain reliefs are available and may be purchased separately. Consult Tyco Electronics.
2. Contact **Extraction/Lance Reset Tool No. 843996-3.**

Keying Plugs

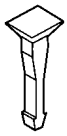

Part Number 86286-1
(Plugs into standard or intermediate pressure receptacle contact)

Material:

Natural color nylon

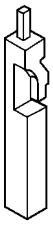

Part Number 87077-1
(for .645 high housings)
Part Number 87077-2
(for .600 high housings)
(Plugs directly into housing)

For complete product information, order Catalog 1307819

Products for Industrial & Commercial Applications

Dimensions are shown for reference purposes only.

Dimensions are in inches and millimeters unless otherwise specified. Values in brackets are metric equivalents.

Specifications subject to change.

Technical Support Center
1-800-522-6752
www.tycoelectronics.com

Mod IV Wire-Applied Housings, Double-Row, .100 x .100 [2.54 x 2.54] Centerline

Polarized



Material:

Black thermoplastic, flame retardant

Related Product Data:

Contacts—pages 2117, 2119
Mateable Headers and Posts—pages 2073-2080

Technical Documents: pages 2160, 2161

Product Specification
108-25007, 208-25019, 108-25020, 108-25021

Application Specification
114-25003, 114-25016

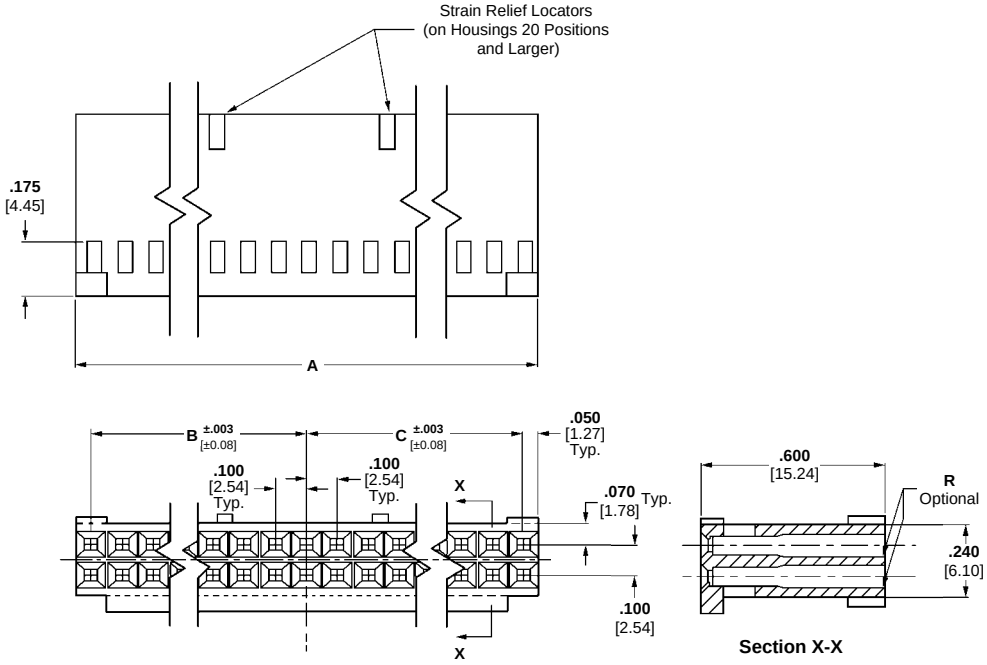

No. of Positions	Dimensions A	Dimensions B	Dimensions C	Part Numbers Stamped*	Part Numbers Unstamped**
6	**.300** 7.62	**.100** 2.54	**.100** 2.54	87977-1	2-87977-8
8	**.400** 10.16	**.200** 5.08	**.100** 2.54	—	2-87977-9
10	**.500** 12.70	**.200** 5.08	**.200** 5.08	87977-3	3-87977-0
12	**.600** 15.24	**.300** 7.62	**.200** 5.08	87977-4	—
14	**.700** 17.78	**.300** 7.62	**.300** 7.62	—	3-87977-2
16	**.800** 20.32	**.400** 10.16	**.300** 7.62	—	3-87977-3
20	**1.000** 25.40	**.500** 12.70	**.400** 10.16	87977-8	3-87977-5
24	**1.200** 30.48	**.600** 15.24	**.500** 12.70	1-87977-0	—

*Cavity identification, AMP, part number and date code stamped on housing where size permits.
**No marking on housing or strain relief.
Notes: 1. Strain reliefs are available and may be purchased separately. Consult Tyco Electronics.
2. Contact **Extraction/Lance Reset Tool No. 843996-3.**

Keying Plugs

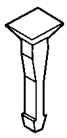

Part Number 86286-1
(Plugs into standard or intermediate pressure receptacle contact)

Material:

Natural color nylon

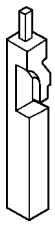

Part Number 87077-2
(Plugs directly into housing)

For complete product information, order Catalog 1307819

Products for Industrial & Commercial Applications
Dimensions are shown for reference purposes only.
Dimensions are in inches and millimeters unless otherwise specified. Values in brackets are metric equivalents.
Specifications subject to change.
Technical Support Center
1-800-522-6752
www.tycoelectronics.com

Mod IV Wire-Applied Housings, Double-Row, .100 x .100 [2.54 x 2.54] Centerline

Polarized (with Detent Latching, with and without Strain Relief/Pull Tab)



Material:

Black thermoplastic, flame retardant

Related Product Data:

Contacts—pages 2117, 2119
Mateable Headers and Posts—pages 2073-2077

Technical Documents: pages 2160, 2161

Product Specification
108-25007, 208-25019, 108-25020, 108-25021

Application Specification
114-25003, 114-25016

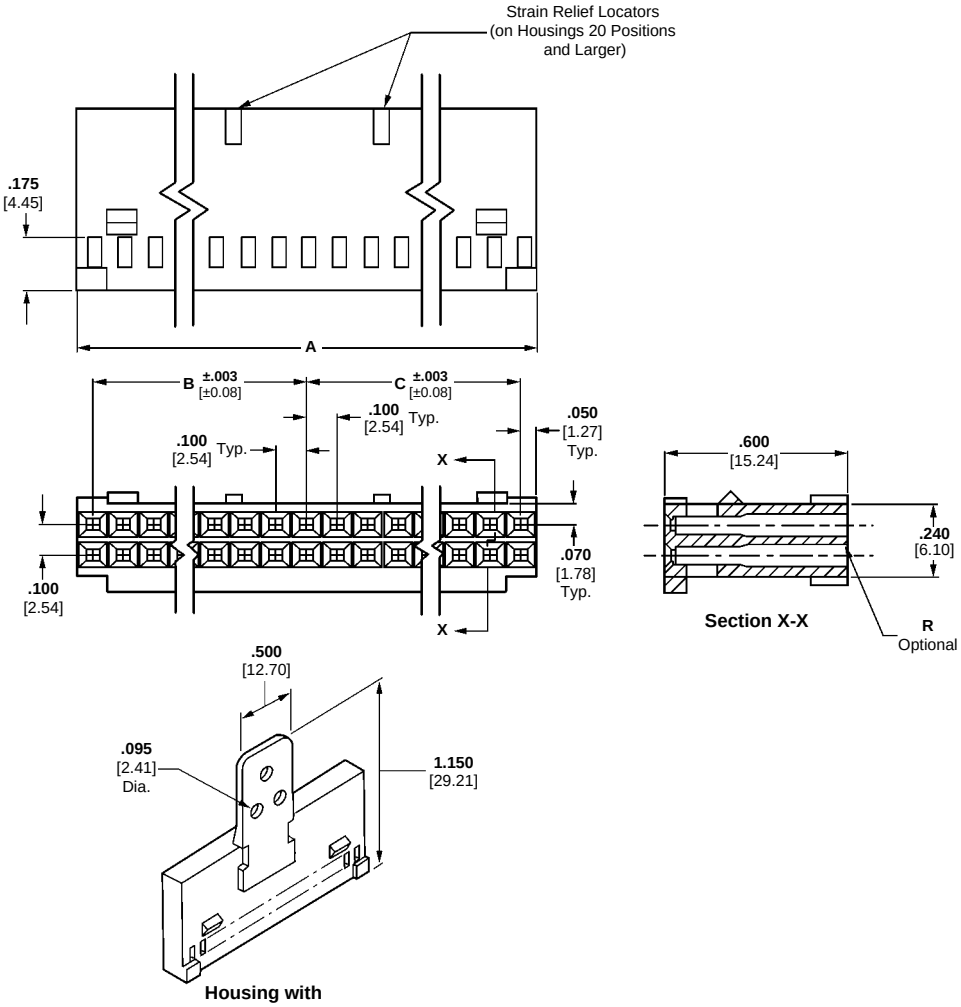

Housing with Strain Relief/Pull Tab
Strain Relief Part Number 87921-1
(10 thru 18 positions)

Keying Plugs

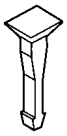

Part Number 86286-1
(Plugs into standard or intermediate pressure receptacle contact)

Material:

Natural color nylon

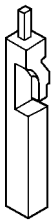

Part Number 87077-2
(Plugs directly into housing)

No. of Positions	Dimensions A	Dimensions B	Dimensions C	No. of Detents	Part Numbers: Without Strain Relief Stamped*	Part Numbers: Without Strain Relief Unstamped**	Part Numbers: With Strain Relief Stamped*
6	**.300** 7.62	**.100** 2.54	**.100** 2.54	1	87631-2	87631-1	—
8	**.400** 10.16	**.200** 5.08	**.100** 2.54	1	87631-4	87631-3	—
10	**.500** 12.70	**.200** 5.08	**.200** 5.08	1	87631-6	87631-5	87922-1
12	**.600** 15.24	**.300** 7.62	**.200** 5.08	1	87631-8	87631-7	87922-2
14	**.700** 17.78	**.300** 7.62	**.300** 7.62	1	1-87631-0	87631-9	87922-3
16	**.800** 20.32	**.400** 10.16	**.300** 7.62	1	1-87631-2	1-87631-1	87922-4
18	**.900** 22.86	**.400** 10.16	**.400** 10.16	1	1-87631-4	1-87631-3	87922-5
20	**1.000** 25.40	**.500** 12.70	**.400** 10.16	2	—	1-87631-5	87733-1
24	**1.200** 30.48	**.600** 15.24	**.500** 12.70	2	—	1-87631-9	—
26	**1.300** 33.02	**.600** 15.24	**.600** 15.24	2	2-87631-2	2-87631-1	—
30	**1.500** 38.10	**.700** 17.78	**.700** 17.78	2	2-87631-6	—	—
34	**1.700** 43.18	**.800** 20.32	**.800** 20.32	2	3-87631-0	2-87631-9	—
40	**2.000** 50.80	**1.000** 25.40	**.900** 22.86	2	—	3-87631-5	—
50	**2.500** 63.50	**1.200** 30.48	**1.200** 30.48	2	—	4-87631-1	1-87733-4

*Cavity identification, AMP, part number and date code stamped on housing and/or strain relief where size permits.
**No marking on housing or strain relief.

Notes: 1. The Strain Relief/Pull Tab can be bonded to any thermoplastic connector housing.
2. Strain reliefs may be purchased separately.
3. Contact **Extraction/Lance Reset Tool No. 843996-3.**

For complete product information, order Catalog 1307819

Products for Industrial & Commercial Applications

Dimensions are shown for reference purposes only.

Dimensions are in inches and millimeters unless otherwise specified. Values in brackets are metric equivalents.

Specifications subject to change.

Technical Support Center
1-800-522-6752
www.tycoelectronics.com

Mod IV Wire-Applied Housings, Double-Row, .100 x .100 [2.54 x 2.54] Centerline

Center Polarized



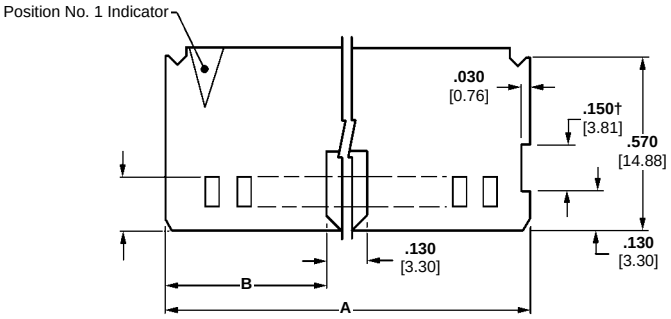

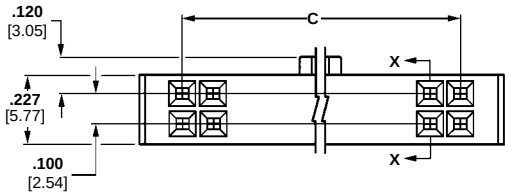

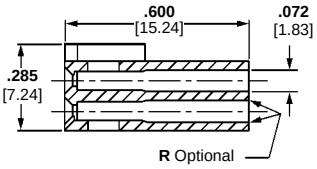

Section X-X

Material:

Black thermoplastic, flame retardant

Related Product Data:

Contacts—pages 2069-2119

Mateable Headers and Posts: AMP-LATCH Ejection Headers with .576 [14.63] Ejection Latches—Catalog 82012, Part Nos. 102186-1 & 102320-1

Technical Documents: pages 2160, 2161

Product Specification
108-25007, 208-25019, 108-25020, 108-25021

Application Specification
114-25003, 114-25016

No. of Positions	Dimensions A	Dimensions B	Dimensions C	Part Numbers (Stamped*)
10	**.680** 17.27	**.275** 6.98	**.400** 10.16	102387-1
14	**.880** 22.35	**.375** 9.53	**.600** 15.24	102387-2
16	**.980** 24.89	**.425** 10.80	**.700** 17.78	102387-3
20	**1.180** 29.97	**.525** 13.34	**.900** 22.86	102387-4
24	**1.380** 35.05	**.625** 15.88	**1.100** 27.94	102387-5
26	**1.480** 37.59	**.675** 17.15	**1.200** 30.48	102387-6
30	**1.680** 42.67	**.775** 19.69	**1.400** 35.56	102387-7
34	**1.880** 47.75	**.875** 22.23	**1.600** 40.64	102387-8
40	**2.180** 55.37	**1.025** 26.04	**1.900** 48.26	102387-9
44	**2.380** 60.45	**1.125** 28.58	**2.100** 53.34	1-102387-3
50	**2.680** 68.07	**1.275** 32.39	**2.400** 60.96	1-102387-0
60	**3.180** 80.77	**1.525** 38.74	**2.900** 73.66	1-102387-1
64	**3.380** 85.85	**1.625** 41.28	**3.100** 78.74	1-102387-2

*Cavity identification and AMP stamped on housing.
†Non-functional slot is used for gating purposes during injection molding process. This gating feature is not inherent in all production molds. Therefore, the depicted slot will only be present on housings produced on mold tooling requiring this gating feature.
Note: Contact **Extraction/Lance Reset Tool No. 843996-3.**

Keying Plugs

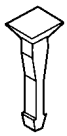

Part Number 86286-1
(Plugs into standard or intermediate pressure receptacle contact)

Material:

Natural color nylon

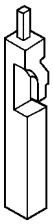

Part Number 87077-2
(Plugs directly into housing)

For complete product information, order Catalog 1307819

Products for Industrial & Commercial Applications

Dimensions are shown for reference purposes only.

Dimensions are in inches and millimeters unless otherwise specified. Values in brackets are metric equivalents.

Specifications subject to change.

Technical Support Center
1-800-522-6752
www.tycoelectronics.com

Short Point, Crimp Snap-In Wire-Applied Contacts and Housings

Product Facts

- **Short point of contact mates with .169 [4.29] to .259 [6.58] long post**
- **Double-row housings are end-to-end and side-to-side stackable**
- **Terminates 32-20 AWG [0.03-0.6 mm²] discrete wire**
- **Contacts have insulation support to accept a maximum insulation diameter of .060 [1.52]**
- **Available with .000015 [0.00038] or .000030 [0.00076] gold duplex, or bright tin-lead plating**
- **Mates with .025 [0.64] square posts**
- **Dual cantilever contact beams for reliable matings**
- **Locking retention latch provides 3 lb [13.34 N] of retention force**
- **Unique locking latch design prevents latch from protruding through latch window**
- **Contacts snap into AMPMODU MTE single-row housings**
- **Double-row housing configurations include .100 [2.54] centerline, plain and polarized**
- **Housing sizes range from 4 to 52 positions**
- **Recognized under the Component Program of Underwriters Laboratories Inc., File No. E28476**
- **Certified by Canadian Standards Association, File No. LR7189**
- **Produced under a Quality Management System certified to ISO 9001**

A copy of the certificate is available upon request

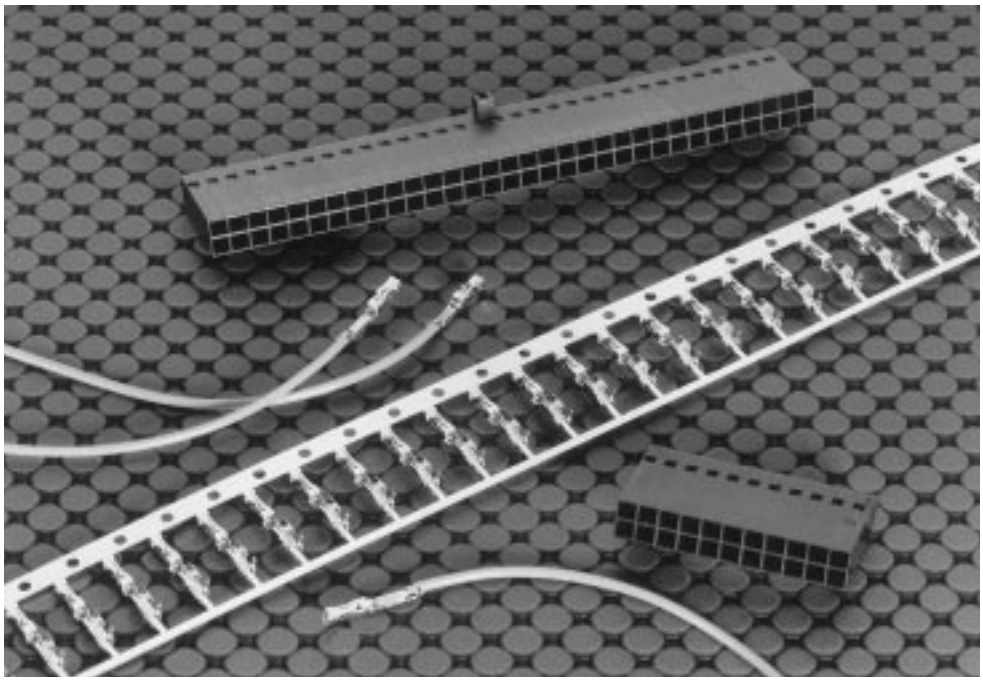

AMP Short Point receptacle contacts are designed to mate with .025 [0.64] square posts. They will mate with posts as short as .169 [4.29].

Short Point double-row housings are end-to-end and side-to-side stackable on .100 [2.54] centers. Contacts also can be used in single-row AMPMODU MTE housings to provide a complete wire-crimp system, or to serve as replacement contacts.

Performance Characteristics:

Contact Current Rating—3 amperes

Termination Resistance—12 milliohms (max.)

Durability—Ref. AMP Product Specification 108-1472

For complete product information, order Catalog 1307819

Short Point Crimp Snap-In Receptacle Contacts

Material and Finish:

Copper alloy C7025, plated as follows:

Plating A—Duplex plated .000030 [0.00076] min. gold on contact area, .000050 [0.00127] min. tin-lead in crimp area, with entire contact underplated .000050 [0.00127] min. nickel

Plating B—Duplex plated .000015 [0.00038] min. gold on contact area, .000050 [0.00127] min. tin-lead in crimp area, with entire contact underplated .000050 [0.00127] min. nickel

Plating C—.000100 [0.00254] min. bright tin-lead over .000050 [0.00127] min. nickel on entire contact

Related Product Data:

Performance Characteristics—page 2126

Housings used in—Short Point—page 2128

AMPMODU MTE Unloaded Housings—pages 2131-2134

Application Tooling—page 2159

Technical Documents: page 2160

Product Specification
108-1472, 108-25027

Application Specification
114-25038

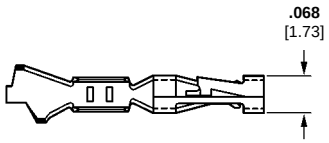

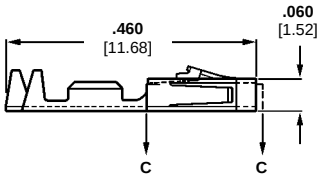

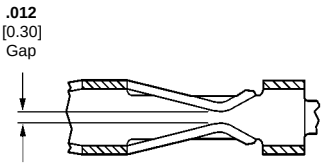

Section C - C



Keying Plug
Part Number 104072-1
Ten plugs are supplied per strip.
Order quantity reflects the number of strips required.



Photo 4857

Extraction/Lance Reset Tool No. 843477-1

Wire Size Range AWG	Wire Size Range [mm²]	Ins. Dia. Range	Finish	Contact Part No. (Standard Pressure) Strip Form	Contact Part No. (Standard Pressure) Loose Piece	Quick-Change Applicator for AMP-O-LECTRIC Machine*	Applicator for AMP-O-MATIC Stripper/Crimper Machine	Hand Tool Nos.
32-28	0.03-0.08	**.025-.060** 0.64-1.52	Plating A	104481-4	104481-8	567296-2	466980-1	58438-1
			Plating B	104481-3	104481-7			
			Plating C	104481-2	104481-6			
26-22	0.13-0.3	**.025-.060** 0.64-1.52	Plating A	104480-4	104480-9	567297-2	466981-1	58438-1
			Plating B	104480-3	104480-8			
			Plating C	104480-2	104480-7			
24-20	0.2-0.5	**.025-.060** 0.64-1.52	Plating A	104479-4	104479-7	567298-2	466982-1	58437-1
			Plating B	104479-3	104479-6			
			Plating C	104479-2	104479-5			

*For use with Model "K" machines. Call the Tooling/Technical Assistance Center (1-800-522-6752) for part nos. of applicators for use with the Model "G" machines, as well as other bench machines and fully automatic AMPOMATOR lead making machines.

For complete product information, order Catalog 1307819

Products for Industrial & Commercial Applications

Dimensions are shown for reference purposes only.

Dimensions are in inches and millimeters unless otherwise specified. Values in brackets are metric equivalents.

Specifications subject to change.

Technical Support Center
1-800-522-6752
www.tycoelectronics.com

Short Point Wire-Applied Housings, Double-Row, Non-Polarized, .100 x .100 [2.54 x 2.54] Centerline

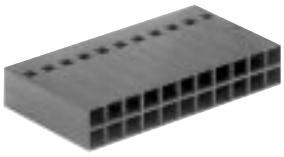

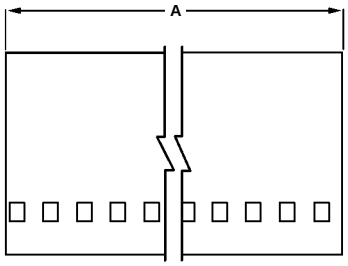

Material:

Black thermoplastic, flame retardant, 94V-0 rated

Related Product Data:

Performance Characteristics—page 2126

Contacts—page 2127

Mateable Headers—pages 2056, 2057

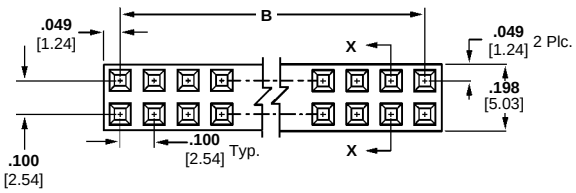

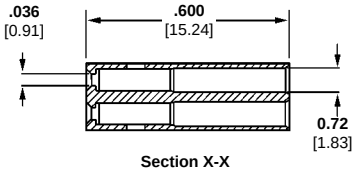

Technical Documents: page 2160

Product Specification
108-1472, 108-25027

Application Specification
114-25038

No. of Positions	Dimensions A	Dimensions B	Housing Part Number
4	**.198** 5.03	**.100** 2.54	104482-1
6	**.298** 7.57	**.200** 5.08	104482-2
8	**.398** 10.11	**.300** 7.62	104482-3
10	**.498** 12.65	**.400** 10.16	104482-4
12	**.598** 15.19	**.500** 12.70	104482-5
14	**.698** 17.73	**.600** 15.24	104482-6
16	**.798** 20.27	**.700** 17.78	104482-7
18	**.898** 22.81	**.800** 20.32	104482-8
20	**.998** 25.35	**.900** 22.86	104482-9
22	**1.098** 27.89	**1.000** 25.40	1-104482-0
26	**1.298** 32.97	**1.200** 30.48	1-104482-1
28	**1.398** 35.51	**1.300** 33.02	1-104482-2
30	**1.498** 38.05	**1.400** 35.56	1-104482-3
32	**1.598** 40.59	**1.500** 38.10	1-104482-4
34	**1.698** 43.13	**1.600** 40.64	1-104482-5
36	**1.798** 45.67	**1.700** 43.18	1-104482-6
38	**1.898** 48.21	**1.800** 45.72	1-104482-7
40	**1.998** 50.75	**1.900** 48.26	1-104482-8
44	**2.198** 55.83	**2.100** 53.34	1-104482-9
52	**2.598** 65.99	**2.500** 63.50	2-104482-0

For complete product information, order Catalog 1307819

Products for Industrial & Commercial Applications

Dimensions are shown for reference purposes only.

Dimensions are in inches and millimeters unless otherwise specified. Values in brackets are metric equivalents.

Specifications subject to change.

Technical Support Center
1-800-522-6752
www.tycoelectronics.com

Product Facts

- **Receptacle assemblies mate with .025 [0.64] sq. posts; mating post length is .200 [5.08] min., .250 [6.35] max.**
- **Proven AMPMODU receptacle contact design; dual cantilever beams, built-in anti-overstress, completely enclosed "box" design, standard or high-pressure**
- **Insulation displacement technology**
- **Two contact sizes for terminating 30-22 AWG [0.05-0.3 mm²] wire range; .054 [1.37] max. insulation diameter with an insulation wall thickness of .015 [0.38] max.**
- **Choice of gold duplex or tin plated contacts**
- **Interchangeable crimp snap-in pin and receptacle contacts available**
- **Housing sizes 2 through 25 positions, single-row .100 [2.54] centers**
- **Colors also available**
- **Plain housings are end-to-end and/or back-to-back stackable for open pin field applications**
- **Optional header with "swaged tail" feature prevents movement prior to flow soldering**
- **Integral latch provides positive retention between header and receptacle housing**
- **Coupling shrouds permit ganging of smaller connectors with guide ribs to form larger single- or double-row latching connectors**
- **Mass terminating tooling provides lowest applied cost for most production needs**
- **SMT and SMT compatible, high-temp headers available**
- **Recognized under the Component Program of Underwriters Laboratories Inc., File No. E28476**
- **Certified by Canadian Standards Association, File No. LR7189**

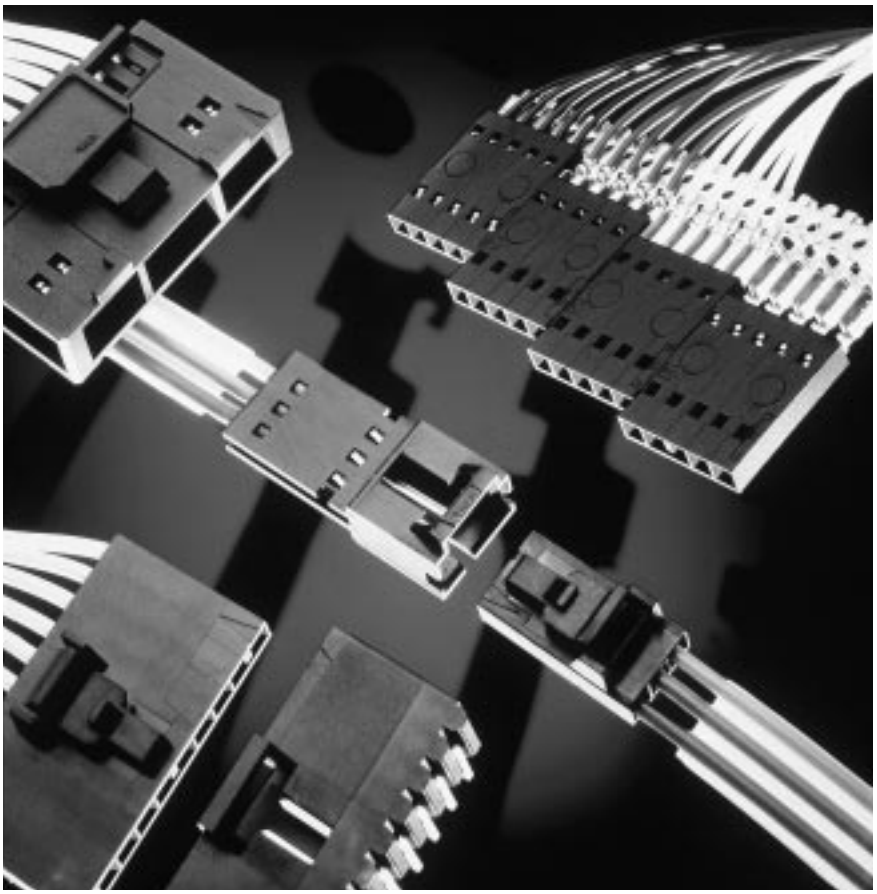

The AMPMODU MTE Interconnection System offers both wire-to-board and wire-to-wire connectors using .025 [0.64] sq. post technology.

The AMPMODU MTE Interconnection System consists of single-row housings with contacts preloaded on .100 [2.54] centers. Housings are furnished with contacts partially inserted, leaving the termination areas exposed. Final contact insertion is accomplished automatically by AMP application equipment, and manually when terminated with the AMP pistol grip hand tool.

The heart of the system is the insulation displacement contact design, featured in both pin and receptacle contacts. The receptacle contact, available in either standard or high-pressure, features dual cantilever beams in an enclosed "box." The post stop prevents a mating post from disturbing the wire termination and also limits the mating depth of a long post to protect a wrap-type termination at the base of the post. The forward contact stop helps prevent contact overinsertion prior to termination. All contacts are furnished on carrier strips which are interlocked for stability and positive location during termination.

Single-row housings are available in sizes 2 through 25 positions. Included are three styles of receptacle housings—plain, polarized/latching and ribbed and two styles of pin housings, shrouded with polarizing/latching feature and ribbed.

Performance Specifications:

Electrical Characteristics:

Contact Current Rating—3 amperes for single contact in free air (Amperage could vary due to ambient temperature, wire size and duty cycles.)

Contact Termination Resistance—15 milliohms (max.)

Dielectric Withstanding Voltage—
At Sea Level–600 VAC, rms
At 70,000 Ft. [21 336 m]–225 VAC, rms

Insulation Resistance—
5,000 megohms (min.)

Environmental Characteristics:

Operating Temperature—
-65°C to +105°C

Vibration—15 G's (gold), 10 G's (tin)

Physical Shock—50 G's

Industrial Mixed Flow Gasing—
Class 1 (20 days) (gold)

Product Specification
108-25034

Application Specification
114-25026

For complete product information, order Catalog 1307819

MTE Interconnection System

Wire-to-Board

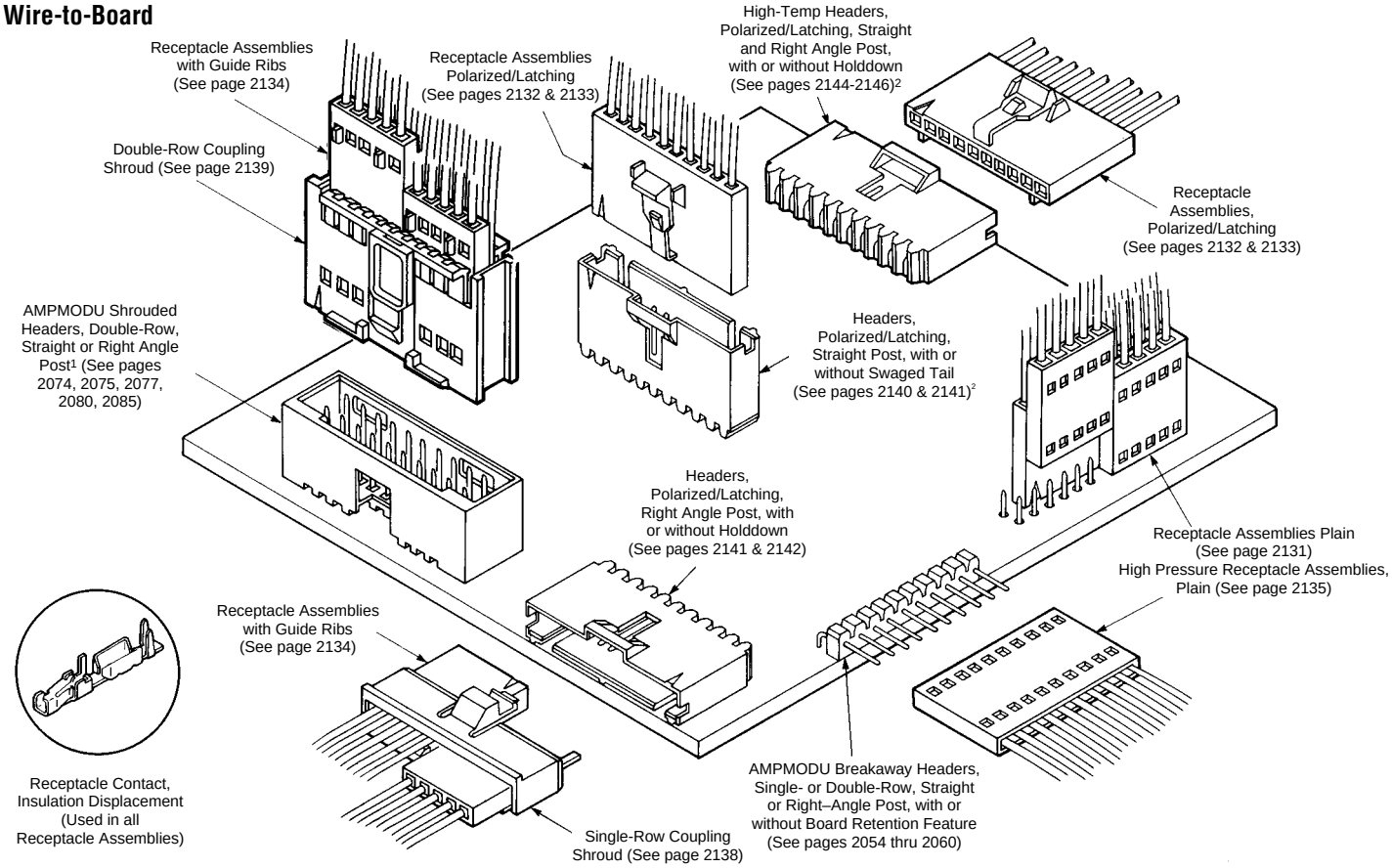

1 Mating AMPMODU Double-Row Shrouded Header Assemblies must have .318 [8.08] mating post length and .150 [3.81] dimension from centerline of last post to inside of end shroud wall.
2 Surface Mount Right-Angle and Vertical Headers are also available (see pages 2147 and 2148)

Wire-to-Wire

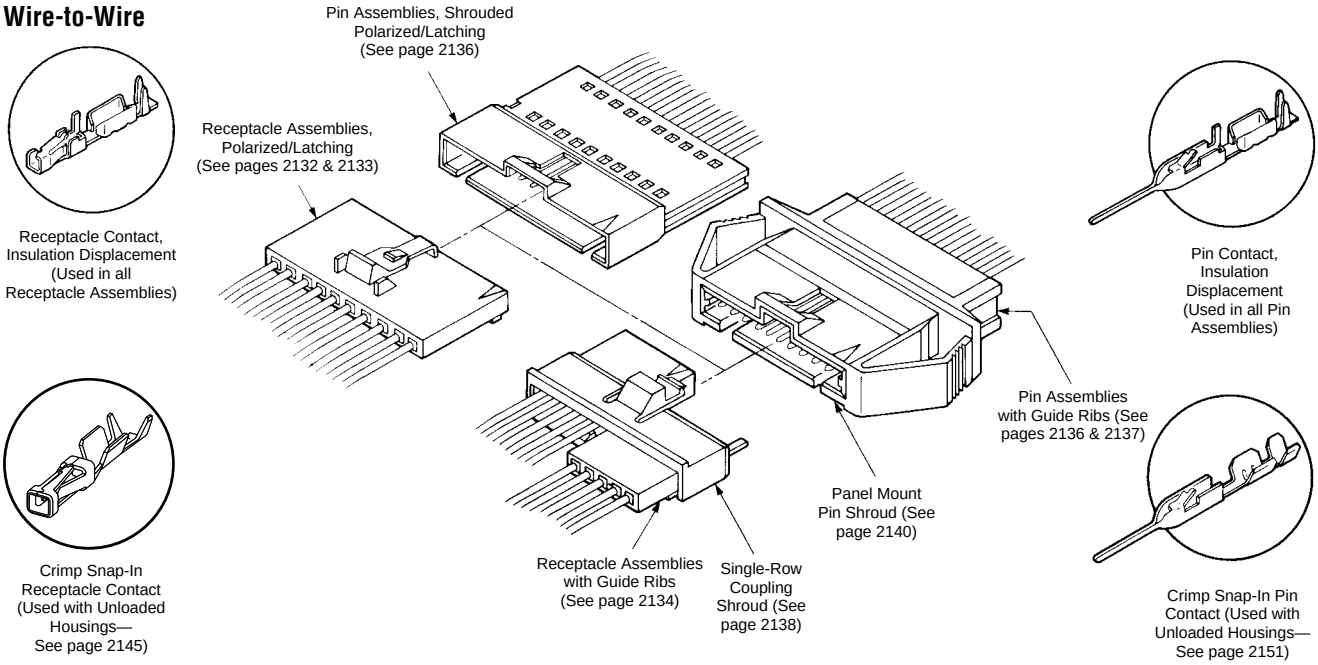

Note: For wire-to-wire applications shown above, all pin and receptacle assembly combinations are intermateable.

For complete product information, order Catalog 1307819

Products for Industrial & Commercial Applications
Dimensions are shown for reference purposes only.
Dimensions are in inches and millimeters unless otherwise specified. Values in brackets are metric equivalents.
Specifications subject to change.
Technical Support Center 1-800-522-6752 www.tycoelectronics.com

MTE Receptacle Assemblies—Plain, Single-Row, .100 [2.54] Centerine



Preassembled housings in strip form are available in positions 2 thru 12. For ease of handling, positions 2 thru 5 are recommended when using the AMP Manual Pistol Grip Tool.

Material and Finish:

Housing—Black thermoplastic, 94V-0 rated

Contacts—Phosphor Bronze, plated as follows:

Plating A—Duplex plated .000030 [0.00076] gold on contact area, .000050 [0.00127] min. tin-lead in crimp area, with entire contact underplated .000050 [0.00127] nickel

Plating B—Duplex plated .000015 [0.00038] gold on contact area, .000050 [0.00127] min. tin-lead in crimp area, with entire contact underplated .000050 [0.00127] nickel

Plating C—.000100 [0.00254] bright tin-lead over .000050 [0.00127] nickel on entire contact

Note: Insulation displacement contacts accept an insulation diameter of .030 [0.76] min. to .054 [1.37] max. with an insulation wall thickness of .015 [0.38] max. Mating post length for preloaded housings is .200 [5.08] min., .250 [6.35] max.

Related Product Data:

Mateable AMPMODU Products:

Breakaway Headers—pages 2054-2060, 2063-2069

Reeled Breakaway Headers—pages 2061-2062

Single- or Double-Row Shrouded Headers with .066 [1.68] End Dimension—pages 2064, 2067, 2071-2073, 2076, 2078, 2081-2084

Interchangeable Crimp Contacts (Short Point)–page 2150

Application Tooling—pages 2158, 2159

Performance Specifications—page 2129

Technical Documents: page 2161, 2162

Product Specification 108-25034

Application Specification 114-25026

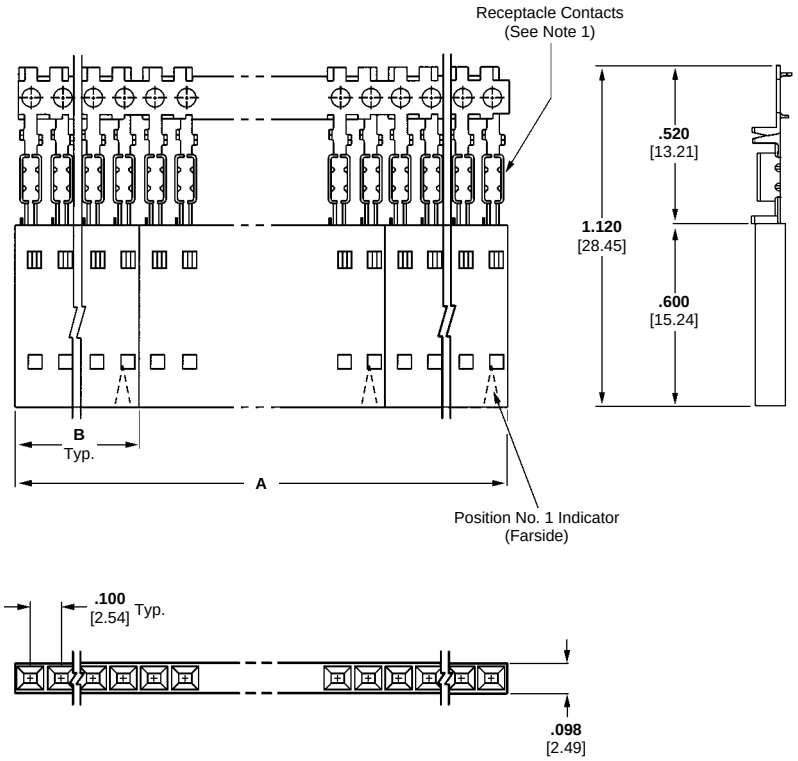

No. of Pos.	Dimensions A	Dimensions B	Housing Quantities Per Strip Segment	Strip Form Receptacle Assembly 26-22 AWG [0.12-0.3mm²] Wire Plating B	Strip Form Receptacle Assembly 26-22 AWG [0.12-0.3mm²] Wire Plating C	Unloaded Housings
2	**2.000** 50.80	**.198** 5.03	10	103975-1	103974-1	103688-1
3	**2.400** 60.96	**.298** 7.57	8	—	103974-2	—
4	**1.990** 50.55	**.398** 10.11	5	—	103974-3	103688-3
5	**1.990** 50.55	**.498** 12.65	4	103975-4	103974-4	—
6	**2.390** 60.71	**.598** 15.19	4	103975-5	—	—

These receptacle assemblies with plain housings can be stacked end-to-end and/or side-to-side for single or double-row connections to an open pin field with a .100 [2.54] centerline grid.

For complete product information, order Catalog 1307819

Products for Industrial & Commercial Applications
Dimensions are shown for reference purposes only.
Dimensions are in inches and millimeters unless otherwise specified. Values in brackets are metric equivalents.
Specifications subject to change.
Technical Support Center 1-800-522-6752 www.tycoelectronics.com

MTE Receptacle Assemblies Strip Form—Polarized/Latching, Single-Row, .100 [2.54] Centerline



Preassembled housings in strip form are available in positions 2 thru 12. For ease of handling, positions 2 thru 5 are recommended when using the AMP Manual Pistol Grip Tool.

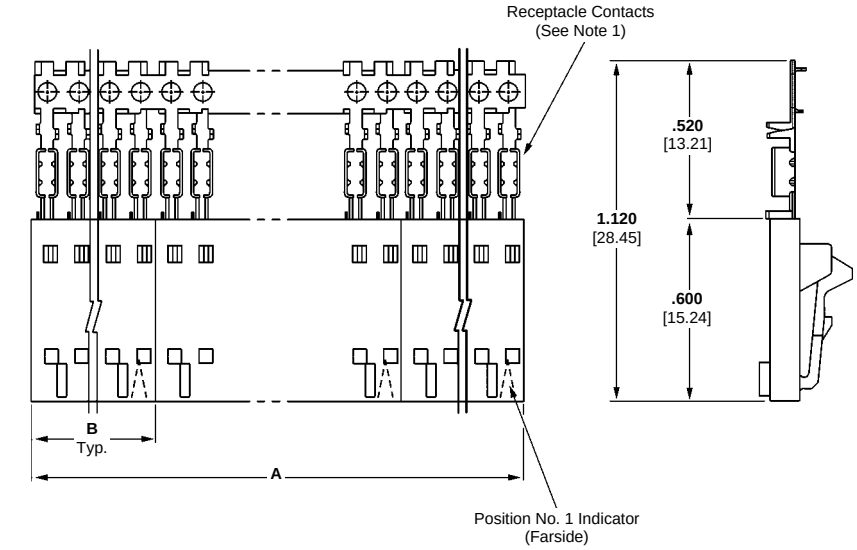

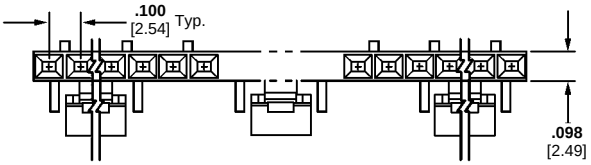

Material and Finish:

Housing—Black thermoplastic, 94V-0 rated

Contacts—Phosphor Bronze, plated as follows:

Plating A—Duplex plated .000030 [0.00076] gold on contact area, .000050 [0.00127] min. tin-lead in crimp area, with entire contact underplated .000050 [0.00127] nickel

Plating B—Duplex plated .000015 [0.00038] gold on contact area, .000050 [0.00127] min. tin-lead in crimp area, with entire contact underplated .000050 [0.00127] nickel

Plating C—.000100 [0.00254] bright tin-lead over .000050 [0.00127] nickel on entire contact

Note: Insulation displacement contacts accept an insulation diameter of .030 [0.76] min. to .054 [1.37] max. with an insulation wall thickness of .015 [0.38] max. Mating post length for preloaded housings is .200 [5.08] min., .250 [6.35] max.

Related Product Data:

Mateable AMPMODU Products:

Pin Assemblies (Polarized/Latching)—page 2136

Pin Assemblies with Guide Ribs (installed in Panel Mount Pin Shroud)—page 2137

Headers (Polarized/Latching)—pages 2140-2148

Interchangeable Crimp Contacts (Short Point)—page 2150

Application Tooling—pages 2158, 2159

Performance Specifications—page 2129

Technical Documents: pages 2161, 2162

Product Specification 108-25034

Application Specification 114-25026

For complete product information, order Catalog 1307819

Products for Industrial & Commercial Applications
Dimensions are shown for reference purposes only.
Dimensions are in inches and millimeters unless otherwise specified. Values in brackets are metric equivalents.
Specifications subject to change.
Technical Support Center 1-800-522-6752 www.tycoelectronics.com

MTE Receptacle Assemblies—Strip Form Polarized/Latching, Single-Row, .100 [2.54] Centerline

No. of Positions	Dimensions A	Dimensions B	Housing Quantities Per Strip Segment	Part Numbers: Strip Form Receptacle Assembly 30-26 AWG [0.05-0.15mm²] Wire — Plating A	Plating B	Plating C	Strip Form Receptacle Assembly 26-22 AWG [0.12-0.3mm²] Wire — Plating A	Plating B	Plating C	Unloaded Housings
2	**2.000** 50.80	**.198** 5.03	10	103961-1	103960-1	103959-1	103958-1	103957-1	103956-1	104257-1
3	**2.400** 60.96	**.298** 7.57	8	103961-2	103960-2	—	103958-2	103957-2	103956-2	104257-2
4	**1.990** 50.55	**.398** 10.11	5	103961-3	103960-3	103959-3	103958-3	103957-3	103956-3	104257-3
5	**1.990** 50.55	**.498** 12.65	4	—	103960-4	103959-4	103958-4	103957-4	103956-4	104257-4
6	**2.390** 60.71	**.598** 15.19	4	—	103960-5	103959-5	103958-5	103957-5	—	104257-5
7	**1.400** 35.56	**.698** 17.73	2	—	103960-6	—	103958-6	103957-6	—	104257-6
8	**1.600** 40.64	**.798** 20.27	2	—	—	103959-7	103958-7	103957-7	103956-7	104257-7
9	**1.800** 45.72	**.898** 22.81	2	—	—	—	—	103957-8	—	104257-8
10	**2.000** 50.80	**.998** 23.35	2	103961-9	103960-9	—	103958-9	103957-9	—	104257-9
11	**2.200** 55.88	**1.098** 27.89	2	—	—	—	—	—	—	1-104257-0
12	**2.400** 60.96	**1.198** 30.43	2	—	—	—	1-103958-1	—	—	1-104257-1

MTE Receptacle Assemblies—Individual Form Polarized/Latching, Single-Row, .100 [2.54] Centerline

No. of Positions	Dimensions B	Part Numbers: Individual Receptacle Assembly 26-22 AWG [0.12-0.3mm²] Wire — Plating B	Plating C	Unloaded Housings
13	**1.298** 32.96	1-103644-2	—	—
15	**1.498** 38.05	—	—	1-104257-4
16	**1.598** 40.59	—	1-103645-5	—
17	**1.698** 43.13	—	—	1-104257-6
18	**1.798** 45.67	—	—	1-104257-7
24	**2.398** 60.91	—	—	2-104257-3

Notes: 1. Receptacle assemblies are furnished with strip contacts partially inserted into housing—contacts latched into "preload" windows. Contacts are fully inserted into housings automatically when terminated with AMP application machines, or manually when terminated with AMP pistol grip hand tool.
2. Use **Extraction/Lance Reset Tool No. 843477-1** to remove receptacle contacts.
3. Keying plugs are available, see page 2150.

MTE Receptacle Assemblies—Guide Ribs, Single-Row, .100 [2.54] Centerline

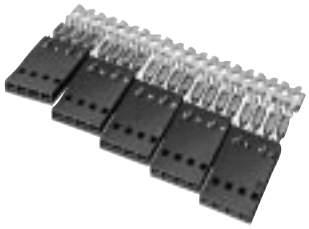

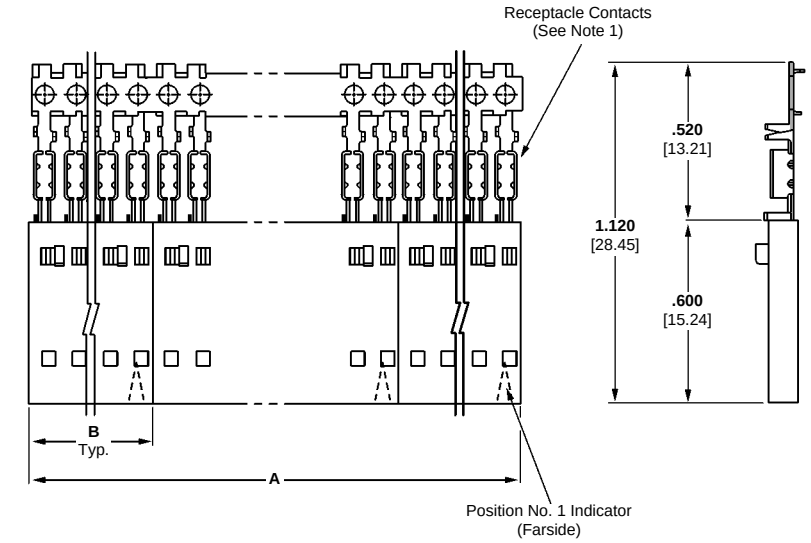

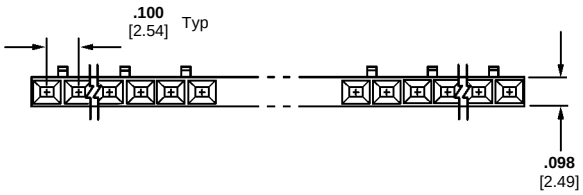

Preassembled housings in strip form are available in positions 2 thru 12. For ease of handling, positions 2 thru 5 are recommended when using the AMP Manual Pistol Grip Tool.

Material and Finish:

Housing—Black thermoplastic, 94V-0 rated

Contacts—Phosphor Bronze, plated as follows:

Plating A—Duplex plated .000030 [0.00076] gold on contact area, .000050 [0.00127] min. tin-lead in crimp area, with entire contact underplated .000050 [0.00127] nickel

Plating B—Duplex plated .000015 [0.00038] gold on contact area, .000050 [0.00127] min. tin-lead in crimp area, with entire contact underplated .000050 [0.00127] nickel

Plating C—.000100 [0.00254] bright tin-lead over .000050 [0.00127] nickel on entire contact

Note: Insulation displacement contacts accept an insulation diameter of .030 [0.76] min. to .054 [1.37] max. with an insulation wall thickness of .015 [0.38] max. Mating post length for preloaded housings is .200 [5.08] min., .250 [6.35] max.

Related Product Data:

Coupling Shrouds used with:

Single-Row—page 2138

Double-Row—page 2139

Mateable AMPMODU Products (with Receptacle Assemblies Installed in Single-Row Coupling Shrouds):

Pin Assemblies (Polarized/ Latching)—page 2136

Pin Assemblies with Guide Ribs (installed in Panel Mount Pin Shroud)—page 2137

Headers (Polarized/Latching)—pages 2140-2148

Mateable AMPMODU Products (with Receptacle Assemblies Installed in Double-Row Coupling Shrouds):

Headers, Shrouded, Double-Row (.318 [8.08] mating post length, .150 [3.81] end dimension)—pages 2074, 2075, 2077, 2079, 2080, 2085

Interchangeable Crimp Contacts—(Short Point)—page 2150

Application Tooling—pages 2158, 2159

Performance Specifications—page 2129

No. of Positions	Dimensions A	Dimensions B	Housing Quantities Per Strip Segment	Part Numbers: Strip Form Receptacle Assembly 26-22 AWG [0.12-0.3mm²] Wire, Plating B	Part Numbers: Strip Form Receptacle Assembly 26-22 AWG [0.12-0.3mm²] Wire, Plating C	Part Numbers: Unloaded Housings
2	**2.000** 50.80	**.198** 5.03	10	103969-1	103968-1	103648-1
3	**2.400** 60.96	**.298** 7.57	8	—	103968-2	103648-2
4	**1.990** 50.55	**.398** 10.11	5	103969-3	103968-3	103648-3
5	**1.990** 50.55	**.498** 12.65	4	103969-4	103968-4	103648-4
8	**1.600** 40.64	**.798** 20.27	2	—	103968-7	103648-7
10	**2.000** 50.80	**.998** 23.35	2	103969-9	103968-9	103648-9

Technical Documents: pages 2161, 2162

Product Specification
108-25034

Application Specification
114-25026

For complete product information, order Catalog 1307819

Products for Industrial & Commercial Applications
Dimensions are shown for reference purposes only.
Dimensions are in inches and millimeters unless otherwise specified. Values in brackets are metric equivalents.
Specifications subject to change.
Technical Support Center
1-800-522-6752
www.tycoelectronics.com

MTE High Pressure Receptacle Assemblies—Plain, Single-Row, .100 [2.54] Centerline



Preassembled housings in strip form are available in positions 2 thru 12. For ease of handling, positions 2 thru 5 are recommended when using the AMP Manual Pistol Grip Tool.

Material and Finish:

Housing—Black thermoplastic, 94V-0 rated

Contacts—Phosphor Bronze, duplex plated .000030 [0.00076] gold on contact area, .000050 [0.00127] min. tin-lead in crimp area, with entire contact underplated .000050 [0.00127] nickel

Note: Insulation displacement contacts accept an insulation diameter of .030 [0.76] min. to .054 [1.37] max. with an insulation wall thickness of .015 [0.38] max. Mating post length for preloaded housings is .200 [5.08] min., .250 [6.35] max.

Related Product Data:

Mateable AMPMODU Products:

Breakaway Headers—pages 2054-2060, 2063-2068

Reeled Breakaway Headers—pages 2061-2062

Single- or Double-Row Shrouded Headers with .066 [1.68] End Dimension—pages 2064-2067, 2071-2073, 2076, 2081-2083

Application Tooling—pages 2158, 2159

Performance Specifications—page 2129

Technical Documents: pages 2161, 2162

Product Specification
108-25034

Application Specification
114-25026

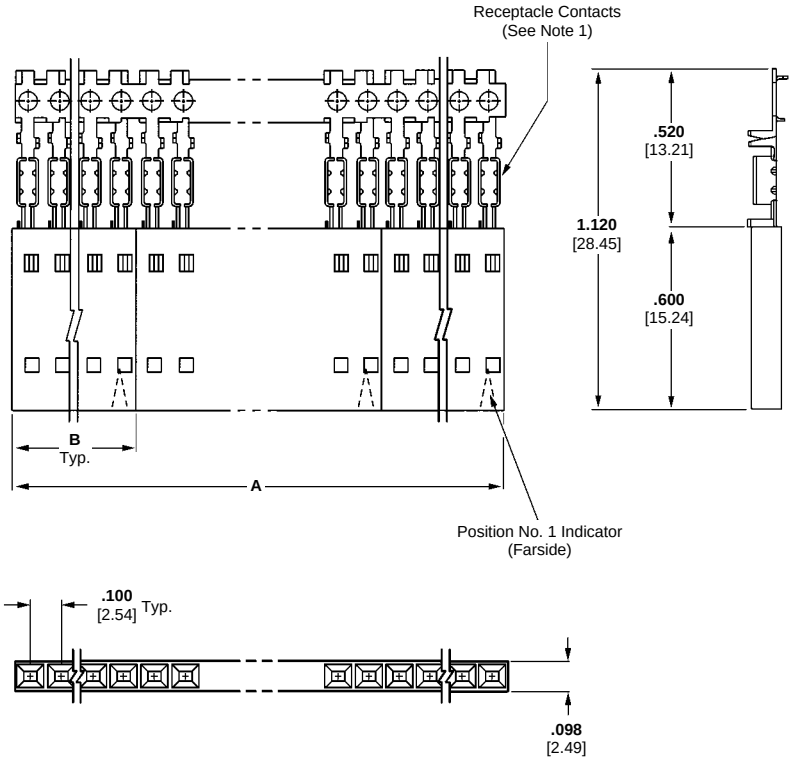

No. of Positions	Dimensions A	Dimensions B	Housings Quantites Per Strip Segment	Part Numbers Strip Form Receptacle Assembly 26-22 AWG [.12-.30mm²] Wire
2	**1.980** 50.29	**.198** 5.03	10	104439-1
3	**1.490** 37.85	**.298** 7.57	5	104439-2
4	**1.990** 50.55	**.398** 10.11	5	104439-3
5	**1.990** 50.55	**.498** 12.65	4	104439-4
8	**1.600** 40.64	**.798** 20.27	2	104439-7

Notes: 1. Receptacle assemblies are furnished with strip contacts partially inserted into housing—contacts latched into "preload" windows. Contacts are fully inserted into housings automatically when terminated with AMP application machines, or manually when terminated with AMP pistol grip hand tool.
2. High pressure receptacle contacts can be made available in other housing styles and position sizes. Contact your Tyco Electronics sales representative.

MTE Pin Assemblies, Shrouded—Polarized/Latching, Single-Row, .100 [2.54] Centerline

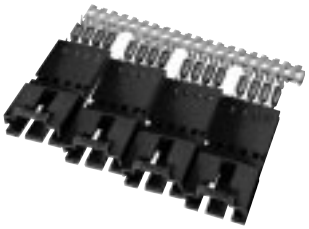

Preassembled housings in strip form are available in positions 2 thru 12. For ease of handling, positions 2 thru 5 are recommended when using the AMP Manual Pistol Grip Tool.

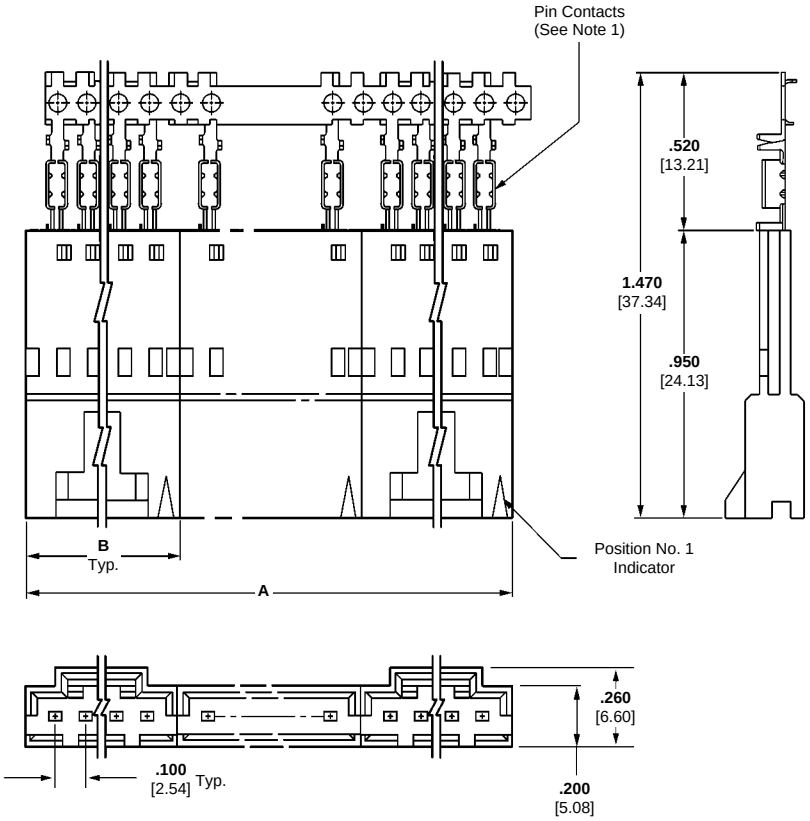

Material and Finish:

Housing—Black thermoplastic, 94V-0 rated

Contacts—Phospor Bronze, plated as follows:

Plating A—Duplex plated .000030 [0.00076] gold on contact area, .000050 [0.00127] min. tin-lead in crimp area, with entire contact underplated .000050 [0.00127] nickel

Plating B—Duplex plated .000015 [0.00038] gold on contact area, .000050 [0.00127] min. tin-lead in crimp area, with entire contact underplated .000050 [0.00127] nickel

Plating C—.000100 [0.00254] bright tin-lead over .000050 [0.00127] nickel on entire contact

Note: Insulation displacement contacts accept an insulation diameter of .030 [0.76] min. to .054 [1.37] max. with an insulation wall thickness of .015 [0.38] max.

Related Product Data:

Mateable AMPMODU Products:

Receptacle Assemblies (Polarized/Latching)—pages 2132, 2133

Receptacle Assemblies with Guide Ribs (installed in Single-Row Coupling Shroud)—pages 2134, 2138

Interchangeable Crimp Contacts—page 2157

Application Tooling—pages 2158, 2159

Performance Specifications—page 2129

Technical Documents: pages 2161, 2162

No. of Positions	Dimensions A		Dimensions B		Housing Quantities Per Strip Segment	Part Numbers: Strip Form Receptacle Assembly 30-26 AWG [0.05-0.15mm²] Wire			Part Numbers: Strip Form Receptacle Assembly 26-22 AWG [0.12-0.3mm²] Wire			Part Numbers: Unloaded Housings
						Plating A	Plating B	Plating C	Plating A	Plating B	Plating C	
2	**2.360**	59.94	**.295**	7.49	8	103949-1	103948-1	103947-1	103946-1	—	—	—
3	**1.980**	50.29	**.395**	10.03	5	103949-2	103948-2	—	—	—	103944-2	—
4	**1.980**	50.29	**.495**	12.57	4	—	103948-3	—	103946-3	103945-3	103944-3	—
5	**2.380**	60.45	**.595**	15.11	4	—	—	—	103946-4	103945-4	103944-4	103653-4
6	**1.390**	35.31	**.695**	17.65	2	—	—	—	—	103945-5	103944-5	—
7	**2.390**	60.71	**.795**	20.19	3	—	—	—	—	—	—	103653-6
8	**1.790**	45.47	**.895**	22.73	2	—	—	—	—	—	—	103653-7
9	**1.990**	50.57	**.995**	25.27	2	—	—	—	—	—	—	103653-8
10	**2.190**	55.63	**1.095**	27.81	2	—	—	—	—	—	—	103653-9

For complete product information, order Catalog 1307819

Products for Industrial & Commercial Applications
Dimensions are shown for reference purposes only.
Dimensions are in inches and millimeters unless otherwise specified. Values in brackets are metric equivalents.
Specifications subject to change.
Technical Support Center
1-800-522-6752
www.tycoelectronics.com

MTE Pin Assemblies—Guide Ribs, Single-Row, .100 [2.54] Centerline



Preassembled housings in strip form are available in positions 2 thru 12. For ease of handling, positions 2 thru 5 are recommended when using the AMP Manual Pistol Grip Tool.

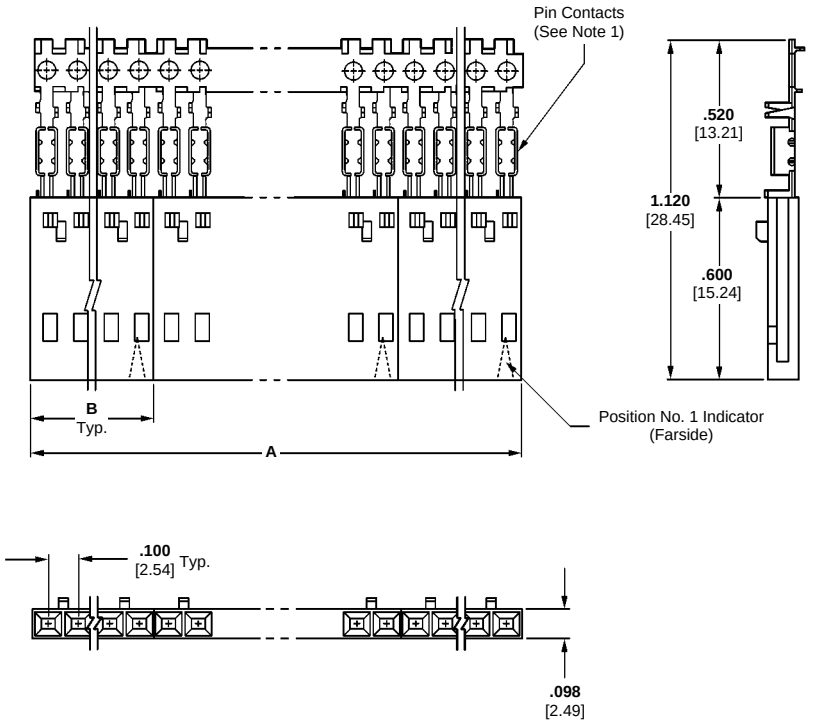

Material and Finish:

Housing—Black thermoplastic, 94V-0 rated

Contacts—Phosphor Bronze, plated as follows:

Plating A—Duplex plated .000030 [0.00076] gold on contact area, .000050 [0.00127] min. tin-lead in crimp area, with entire contact underplated .000050 [0.00127] nickel

Plating B—Duplex plated .000015 [0.00038] gold on contact area, .000050 [0.00127] min. tin-lead in crimp area, with entire contact underplated .000050 [0.00127] nickel

Plating C—.000100 [0.00254] bright tin-lead over .000050 [0.00127] nickel on entire contact

Note: Insulation displacement contacts accept an insulation diameter of .030 [0.76] min. to .054 [1.37] max. with an insulation wall thickness of .015 [0.38] max.

No. of Positions	Dimensions A		Dimensions B		Housing Quantities Per Strip Segment	Part Numbers: Strip Form Receptacle Assembly 26-22 AWG [0.12-0.3mm²] Wire, Plating B	Part Numbers: Unloaded Housings
2	**1.980**	50.29	**0.198**	5.03	10	103951-1	—
3	**1.490**	37.85	**0.298**	7.57	5	103951-2	—
4	**1.990**	50.55	**0.398**	10.11	5	103951-3	104503-3

Related Product Data:

Receptacle Assemblies (Polarized/Latching)—pages 2132, 2133

Receptacle Assemblies with Guide Ribs (installed in Single Coupling Shroud—pages 2134, 2138

Interchangeable Crimp Contacts—page 2151

Application Tooling—pages 2158, 2159

Performance Specifications—page 2129

Technical Documents: pages 2161, 2162

Product Specification
108-25034

Application Specification
114-25026

For complete product information, order Catalog 1307819

Products for Industrial & Commercial Applications
Dimensions are shown for reference purposes only.
Dimensions are in inches and millimeters unless otherwise specified. Values in brackets are metric equivalents.
Specifications subject to change.
Technical Support Center
1-800-522-6752
www.tycoelectronics.com

Coupling Shrouds for MTE Receptacle Assemblies with Guide Ribs

Single-Row

Material:
Black thermoplastic, 94V-0 rated

Technical Documents: pages 2161, 2162

Product Specification
108-25034

Application Specification
114-25026

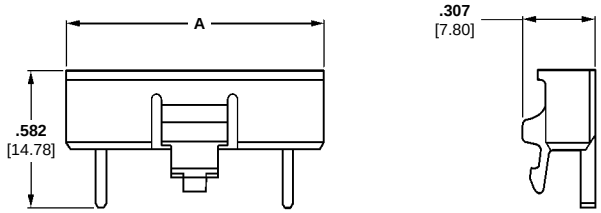

No. of Positions	Dimension A	Part Numbers
		Single-Row Coupling Shroud
4	**.485** 12.32	103680-1
8	**.885** 22.48	103680-5

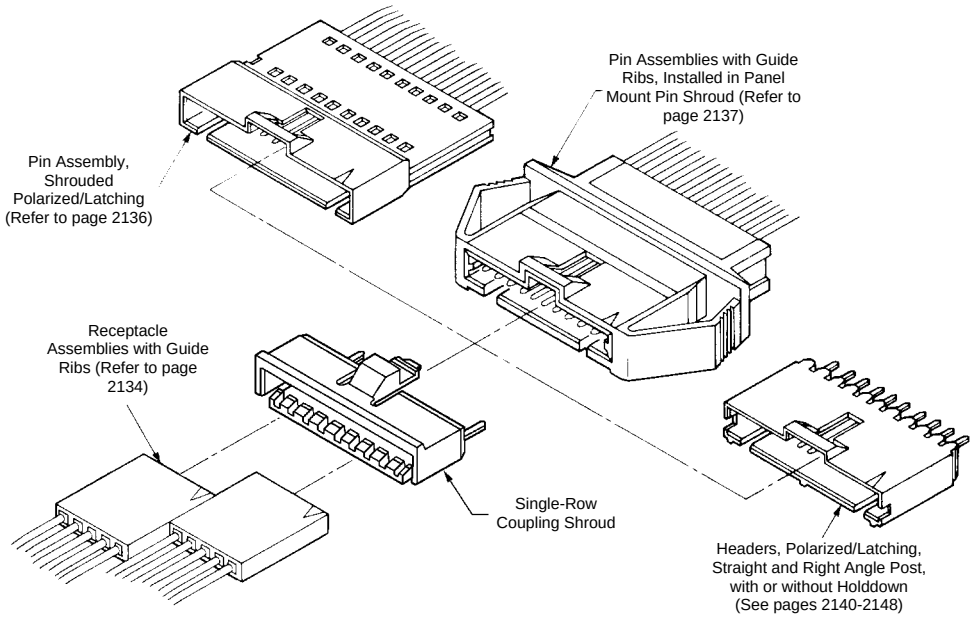

Typical Application of Single-Row Coupling Shroud and Mating AMPMODU MTE Products

For complete product information, order Catalog 1307819

Products for Industrial & Commercial Applications
Dimensions are shown for reference purposes only.
Dimensions are in inches and millimeters unless otherwise specified. Values in brackets are metric equivalents.
Specifications subject to change.
Technical Support Center
1-800-522-6752
www.tycoelectronics.com

Coupling Shrouds for MTE Receptacle Assemblies with Guide Ribs

Double-Row

Material:
Black thermoplastic, 94V-0 rated

Technical Documents: pages 2161, 2162

Product Specification
108-25034

Application Specification
114-25026

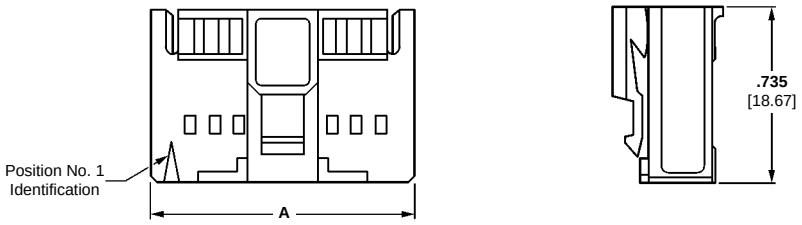

No. of Positions	Dimension A	Part Numbers: Double-Row Coupling Shroud
20	**1.185** 30.10	104500-2

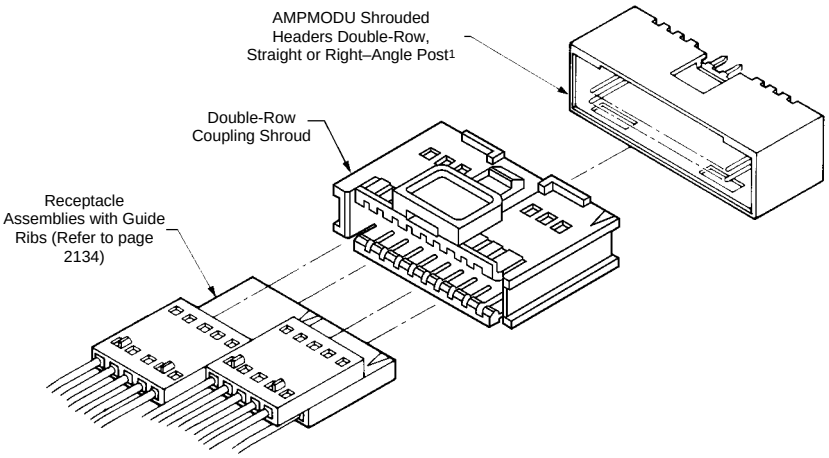

1 Mating AMPMODU Double-Row Shrouded Headers must have .318 [8.08] mating post length and .150 [3.81] dimension from centerline of last post to inside of end shroud wall.

Typical Application of Double-Row Coupling Shroud and Mating AMPMODU Products

MTE Headers, Shrouded Polarized/Latching, Single-Row .100 [2.54] Centerline

.025 [0.64] Square Straight Post (With or Without Swaged Tail)

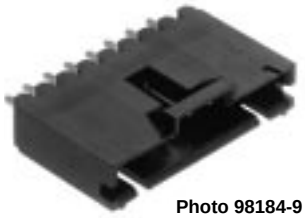

Photo 98184-9

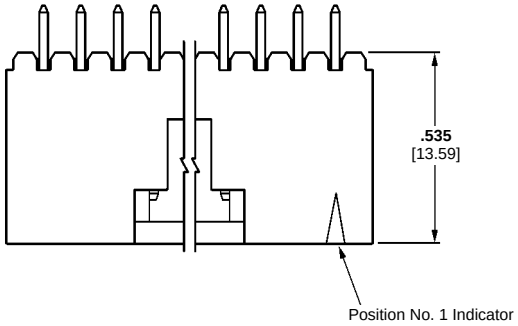



Swaged Retention Tail
(See Note)

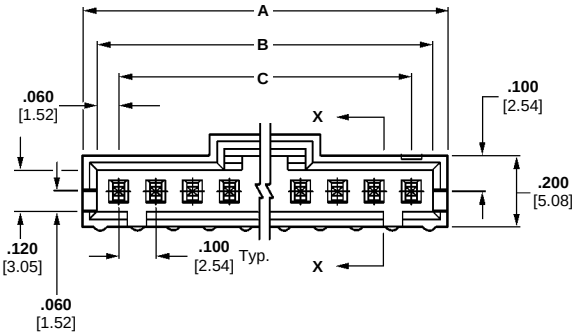

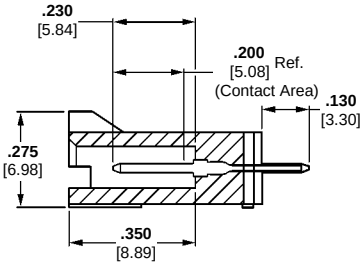

Section X-X

Material and Finish:

Housing—Black thermoplastic, 94V-0 rated

Posts—Copper alloy, plated as follows:

Plating A—Duplex plated .000030 [0.00076] gold on contact area, .000100 [0.00254] min. tin-lead on solder area, with entire post underplated .000050 [0.00127] nickel

Plating B—Duplex plated .000015 [0.00038] gold on contact area, .000100 [0.00254] min. tin-lead on solder area, with entire post underplated .000050 [0.00127] nickel

Plating C—.000100 [0.00254] tin-lead over .000050 [0.00127] nickel on entire post

Related Product Data:

Mateable AMPMODU MTE Products:

Receptacle Assemblies (Polarized/Latching)—pages 2132, 2133

Receptacle Assemblies with Guide Ribs (installed in Single-Row Coupling Shroud)—pages 2134, 2138

Technical Documents: pages 2161, 2162

Product Specification
108-25034

Application Specification
114-25026

No. of Positions	Dimensions A	Dimensions B	Dimensions C	Part Numbers: Polarized/Latching Header With Swage — Plating A	Plating B	Plating C	Part Numbers: Polarized/Latching Header Without Swage — Plating A	Plating B	Plating C
2	**.300** 7.62	**.220** 5.59	**.100** 2.54	103908-1	—	103669-1	103735-1	—	103639-1
3	**.400** 10.16	**.320** 8.13	**.200** 5.08	103908-2	—	103669-2	103735-2	—	103639-2
4	**.500** 12.70	**.420** 10.67	**.300** 7.62	103908-3	—	103669-3	103735-3	103638-3	103639-3
5	**.600** 15.24	**.520** 13.21	**.400** 10.16	—	—	103669-4	103735-4	103638-4	103639-4
6	**.700** 17.78	**.620** 15.75	**.500** 12.70	—	103670-5	103669-5	103735-5	103638-5	103639-5
7	**.800** 20.32	**.720** 18.29	**.600** 15.24	103908-6	103670-6	103669-6	103735-6	103638-6	103639-6
8	**.900** 22.86	**.820** 20.83	**.700** 17.78	103908-7	103670-7	—	103735-7	103638-7	103639-7
9	**1.000** 25.40	**.920** 23.37	**.800** 20.32	103908-8	103670-8	103669-8	—	103638-8	—
10	**1.100** 27.94	**1.020** 25.91	**.900** 22.86	103908-9	—	103669-9	103735-9	103638-9	103639-9
11	**1.200** 30.48	**1.120** 28.45	**1.000** 25.40	—	1-103670-0	—	—	—	—
12	**1.300** 33.02	**1.220** 30.99	**1.100** 27.94	1-103908-1	1-103670-1	1-103669-1	1-103735-1	1-103638-1	1-103639-1
14	**1.500** 38.10	**1.420** 36.07	**1.300** 33.02	—	1-103670-3	—	1-103735-3	1-103638-3	—
15	**1.600** 40.64	**1.520** 38.61	**1.400** 35.56	1-103908-4	1-103670-4	—	—	1-103638-4	—
16	**1.700** 43.18	**1.620** 41.15	**1.500** 38.10	—	1-103670-5	—	—	1-103638-5	—
18	**1.900** 48.26	**1.820** 46.23	**1.700** 43.18	1-103908-7	1-103670-7	—	—	—	—
20	**2.100** 53.34	**2.020** 51.31	**1.900** 48.26	1-103908-9	—	—	—	1-103638-9	—
24	**2.500** 63.50	**2.420** 61.47	**2.300** 58.42	—	2-103670-3	—	—	—	—
25	**2.600** 66.04	**2.520** 64.01	**2.400** 60.96	—	2-103670-4	—	—	—	—

Notes: 1. Selectively loaded headers are available, consult Tyco Electronics.
2. Use **Keying Tool No. 91417-1** to remove post for keying.

For complete product information, order Catalog 1307819

Products for Industrial & Commercial Applications
Dimensions are shown for reference purposes only.
Dimensions are in inches and millimeters unless otherwise specified. Values in brackets are metric equivalents.
Specifications subject to change.
Technical Support Center
1-800-522-6752
www.tycoelectronics.com

MTE Headers, Shrouded Latching, Single-Row .100 [2.54] Centerline

.025 [0.64] Square Right-Angle Post



Material and Finish:

Housing—Black thermoplastic, 94V-0 rated

Posts—Copper alloy, plated as follows:

Plating A—Duplex plated .000030 [0.00076] gold on contact area, .000100 [0.00254] min. tin-lead on solder area, with entire post underplated .000050 [0.00127] nickel

Plating B—Duplex plated .000015 [0.00038] gold on contact area, .000100 [0.00254] min. tin-lead on solder area, with entire post underplated .000050 [0.00127] nickel

Plating C—.000100 [0.00254] tin-lead over .000050 [0.00127] nickel on entire post

With Holddown

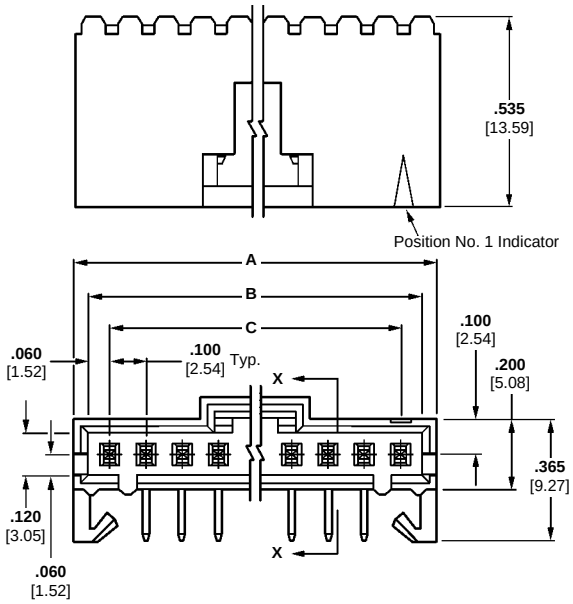

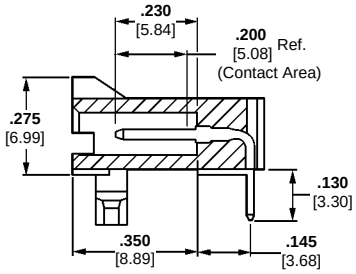

Section X-X



Related Product Data:

Mateable AMPMODU MTE Products:

Receptacle Assemblies (Latching)—pages 2132, 2133

Receptacle Assemblies with Guide Ribs (installed in Single-Row Coupling Shroud)—pages 2134, 2138

Technical Documents: pages 2161, 2162

Product Specification
108-25034

Application Specification
114-25026

Without Holddown

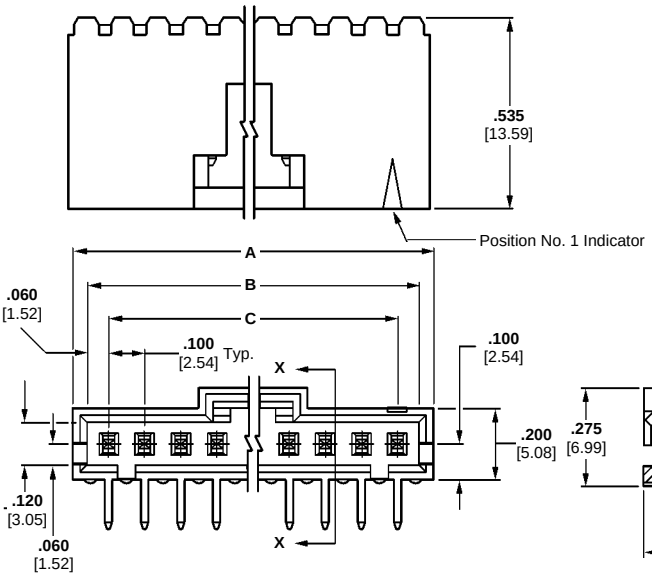

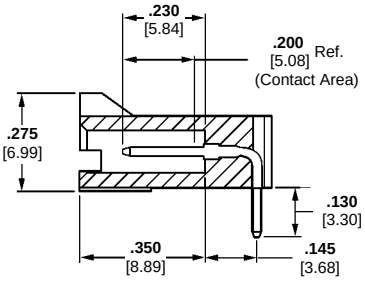

Section X-X

For complete product information, order Catalog 1307819

Products for Industrial & Commercial Applications
Dimensions are shown for reference purposes only.
Dimensions are in inches and millimeters unless otherwise specified. Values in brackets are metric equivalents.
Specifications subject to change.
Technical Support Center
1-800-522-6752
www.tycoelectronics.com

MTE Headers, Shrouded Latching, Single-Row .100 [2.54] Centerline

No. of Positions	Dimensions A	Dimensions B	Dimensions C	Part Numbers: Latching Header With Hold Down, Plating A	Latching Header With Hold Down, Plating B	Latching Header With Hold Down, Plating C	Latching Header Without Hold Down, Plating A	Latching Header Without Hold Down, Plating B	Latching Header Without Hold Down, Plating C
2	**.300** 7.62	**.220** 5.59	**.100** 2.54	103904-1	103673-1	103672-1	103906-1	103635-1	103634-1
3	**.400** 10.16	**.320** 8.13	**.200** 5.08	103904-2	103673-2	103672-2	103906-2	103635-2	—
4	**.500** 12.70	**.420** 10.67	**.300** 7.62	103904-3	103673-3	103672-3	103906-3	103635-3	103634-3
5	**.600** 15.24	**.520** 13.21	**.400** 10.16	103904-4	103673-4	—	103906-4	103635-4	103634-4
6	**.700** 17.78	**.620** 15.75	**.500** 12.70	103904-5	—	103672-5	103906-5	103635-5	103634-5
7	**.800** 20.32	**.720** 18.29	**.600** 15.24	—	103673-6	—	103906-6	103635-6	—
8	**.900** 22.86	**.820** 20.83	**.700** 17.78	103904-7	103673-7	103672-7	103906-7	—	103634-7
9	**1.000** 25.40	**.920** 23.37	**.800** 20.32	—	103673-8	—	103906-8	103635-8	103634-8
10	**1.100** 27.94	**1.020** 25.91	**.900** 22.86	—	103673-9	103672-9	103906-9	103635-9	103634-9
12	**1.300** 33.02	**1.220** 30.99	**1.100** 27.94	—	1-103673-1	—	1-103906-1	1-103635-1	1-103634-1
14	**1.500** 38.10	**1.420** 36.07	**1.300** 33.02	—	1-103673-3	—	—	1-103635-3	—
15	**1.600** 40.64	**1.520** 38.61	**1.400** 35.56	—	1-103673-4	—	—	1-103635-4	—
16	**1.700** 43.18	**1.620** 41.15	**1.500** 38.10	—	1-103673-5	—	—	—	—
20	**2.100** 53.34	**2.020** 51.31	**1.900** 48.26	—	1-103673-9	—	—	—	—

Notes: 1. Selectively loaded headers are available, consult Tyco Electronics.
2. Use **Keying Tool No. 91417-1** to remove post for keying.

MTE Headers, Shrouded Latching, Single-Row .100 [2.54] Centerline

.025 [0.64] Square Straight Post (With Swaged Tails and PC Board Orientation)



Photo 98184-5

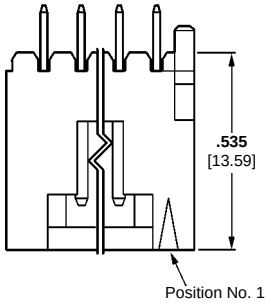



Swaged Retention Tail
(See Note)

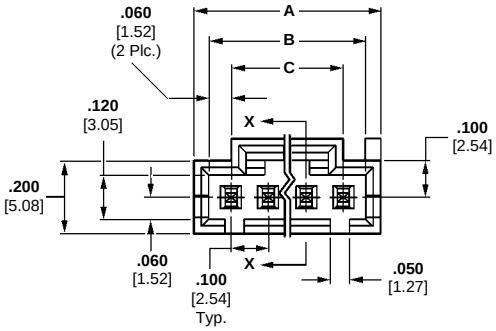

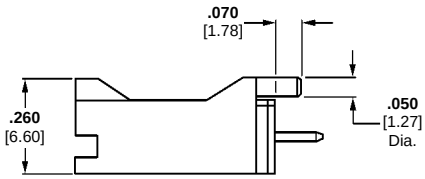

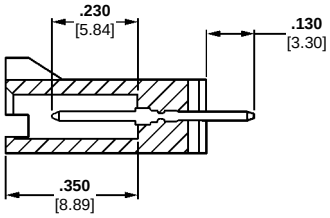

Section X-X

Material and Finish:

Housing—Black thermoplastic, 94V-0 rated

Posts—Copper alloy, plated .000100-.000200 [0.00254-0.00508] tin-lead over .000050 [0.00127] nickel on entire post

Related Product Data:

Mateable AMPMODU MTE Products:

Receptacle Assemblies (Polarized/Latching)—pages 2132, 2133

Receptacle Assemblies with Guide Ribs (installed in Single-Row Coupling Shroud)—pages 2134, 2138

Technical Documents: pages 2161, 2162

Product Specification
108-25034

Application Specification
114-25026

No. of Positions	Dimensions A	B	C	Part Numbers Latching Header
2	**.300** 7.62	**.220** 5.59	**.100** 2.54	104450-1
3	**.400** 10.16	**.320** 8.13	**.200** 5.08	104450-2
4	**.500** 12.70	**.420** 10.67	**.300** 7.62	104450-3
5	**.600** 15.24	**.520** 13.21	**.400** 10.16	104450-4

For complete product information, order Catalog 1307819

Products for Industrial & Commercial Applications
Dimensions are shown for reference purposes only.
Dimensions are in inches and millimeters unless otherwise specified. Values in brackets are metric equivalents.
Specifications subject to change.
Technical Support Center
1-800-522-6752
www.tycoelectronics.com

MTE Headers, High-Temp, Shrouded Polarized/Latching Single-Row, .100 [2.54] Centerline

.025 [0.64] Square Straight Post (With Swaged Tails and PC Board Orientation)



Photo 98184-5

Material and Finish:

Housing—Black thermoplastic, 94V-0 rated

Posts—Copper alloy, duplex plated .000015 [0.00038] gold on contact area, .000100-.000200 [0.00254-0.00508] matte tin-lead on solder tail, with entire post underplated .000050 [0.00127] nickel

Related Product Data:

Mateable AMPMODU MTE Products:

Receptacle Assemblies with Guide Ribs (installed in Single-Row Coupling Shroud)—
pages 2134, 2138

Technical Documents: pages 2161, 2162

Product Specification
108-25034

Application Specification
114-25026

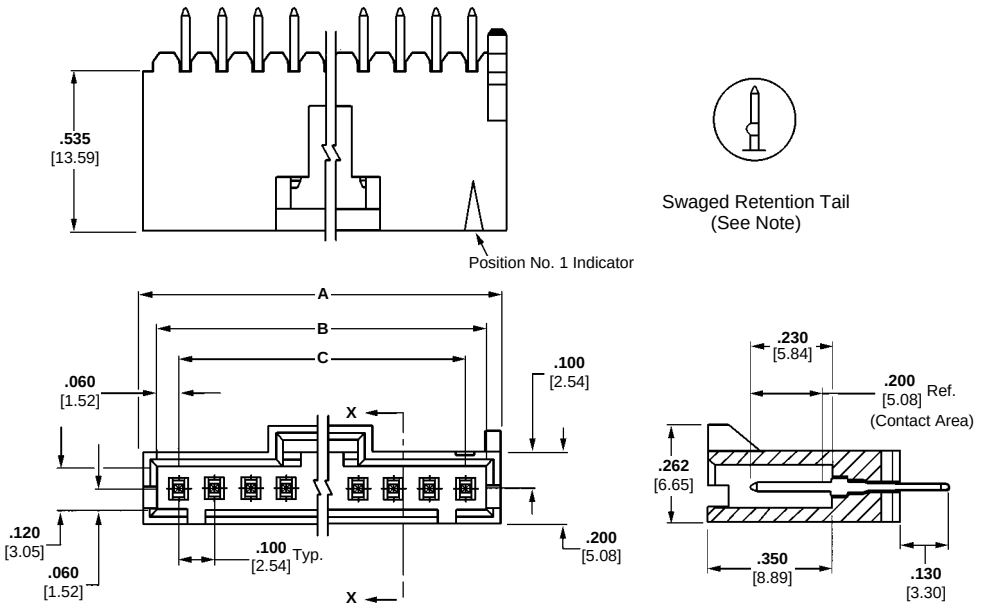

Section X-X

No. of Positions	Dimensions A	Dimensions B	Dimensions C	Part Numbers Polarized/Latching Header, High-Temp
2	**.300** 7.62	**.220** 5.59	**.100** 2.54	104809-1
4	**.500** 12.70	**.420** 10.67	**.300** 7.62	104809-3
10	**1.100** 27.94	**1.020** 25.91	**.900** 22.86	104809-9

For complete product information, order Catalog 1307819

Products for Industrial & Commercial Applications
Dimensions are shown for reference purposes only.
Dimensions are in inches and millimeters unless otherwise specified. Values in brackets are metric equivalents.
Specifications subject to change.
Technical Support Center
1-800-522-6752
www.tycoelectronics.com

MTE Headers, Shrouded High-Temp, Polarized/Latching (Thru-Hole, SMT Compatible) Single-Row, .100 [2.54] Centerline

.025 [0.64] Square Straight Post (With or Without Swaged Tail)



Material and Finish:

Housing—Black thermoplastic, high temperature, 94V-0 rated

Posts—Copper alloy, duplex plated .000015 [0.00038] gold on contact area, .000100-.000200 [0.00254-0.00508] matte tin-lead on solder tail, with entire post underplated .000050 [0.00127] nickel

Related Product Data:

Mateable AMPMODU MTE Products:

Receptacle Assemblies (Polarized/Latching)—pages 2132, 2070

Receptacle Assemblies with Guide Ribs (installed in Single-Row Coupling Shroud)—pages 2134, 2138

Technical Documents: pages 2161, 2162

Product Specification 108-25034

Application Specification 114-25026

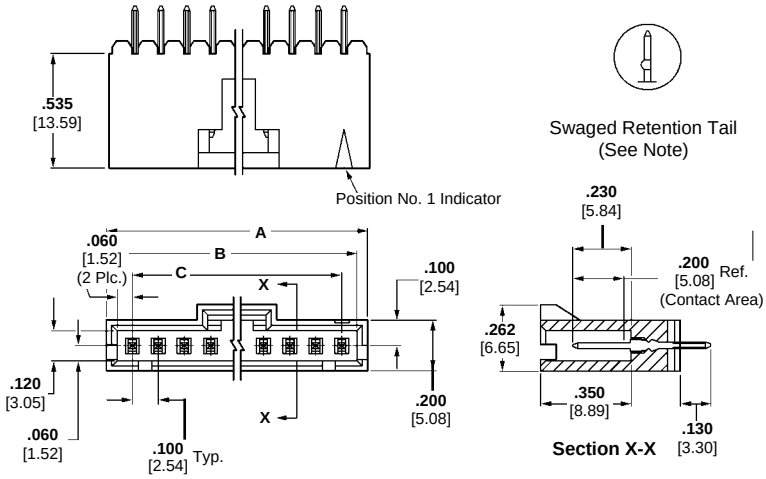

No. of Positions	Dimensions A	Dimensions B	Dimensions C	Straight Header Part Numbers With Swage	Straight Header Part Numbers Without Swage
2	**.300** 7.62	**.220** 5.59	**.100** 2.54	104362-1	—
3	**.400** 10.16	**.320** 8.13	**.200** 5.08	104362-2	104363-2
4	**.500** 12.70	**.420** 10.67	**.300** 7.62	104362-3	104363-3
5	**.600** 15.24	**.520** 13.21	**.400** 10.16	104362-4	104363-4
6	**.700** 17.78	**.620** 15.75	**.500** 12.70	104362-5	104363-5
7	**.800** 20.32	**.720** 18.29	**.600** 15.24	104362-6	—
8	**.900** 22.86	**.820** 20.83	**.700** 17.78	104362-7	104363-7
10	**1.100** 27.94	**1.020** 25.91	**.900** 22.86	—	104363-9
12	**1.300** 33.02	**1.220** 30.99	**1.100** 27.94	1-104362-1	—

Note: Use **Keying Tool No. 91417-1** to remove post for keying.

2 PCB and Wire Connectors

MTE Headers, Shrouded High-Temp, Polarized/Latching (Thru-Hole, SMT Compatible) Single-Row, .100 [2.54] Centerline

.025 [0.64] Square Right-Angle Post (With Holddown)



Material and Finish:

Housing—Black thermoplastic, high temperature, 94V-0 rated

Posts—Copper alloy, duplex plated .000015 [0.00038] gold on contact area, .000100-.000200 [0.00254-0.00508] matte tin-lead on solder tail, with entire post underplated .000050 [0.00127] nickel

Related Product Data:

Mateable AMPMODU MTE Products:

Receptacle Assemblies (Polarized/Latching)—pages 2132, 2133

Receptacle Assemblies with Guide Ribs (installed in Single-Row Coupling Shroud)—pages 2134, 2138

Technical Documents: pages 2161, 2162

Product Specification 108-25034

Application Specification 114-25026

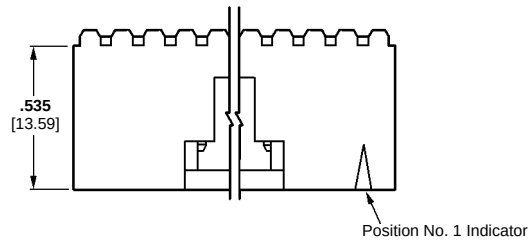

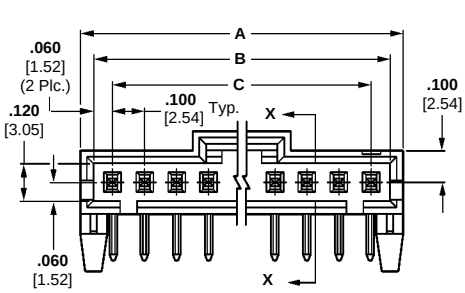

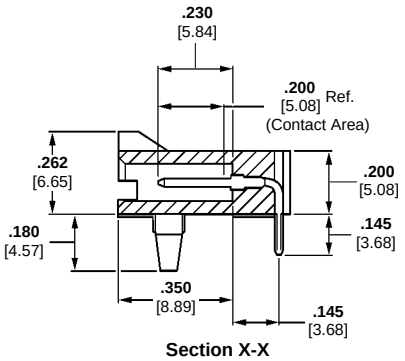

Section X-X

No. of Positions	Dimensions A	Dimensions B	Dimensions C	Right-Angle Header with Swage Part Numbers
2	**.300** 7.62	**.220** 5.59	**.100** 2.54	104361-1
3	**.400** 10.16	**.320** 8.13	**.200** 5.08	104361-2
4	**.500** 12.70	**.420** 10.67	**.300** 7.62	104361-3
5	**.600** 15.24	**.520** 13.21	**.400** 10.16	104361-4
6	**.700** 17.78	**.620** 15.75	**.500** 12.70	104361-5
8	**.900** 22.86	**.820** 20.83	**.700** 17.78	104361-7
9	**1.000** 25.40	**.920** 23.37	**.800** 20.32	104361-8
10	**1.100** 27.94	**1.020** 25.91	**.900** 22.86	104361-9

For complete product information, order Catalog 1307819

Products for Industrial & Commercial Applications
Dimensions are shown for reference purposes only.
Dimensions are in inches and millimeters unless otherwise specified. Values in brackets are metric equivalents.
Specifications subject to change.
Technical Support Center 1-800-522-6752 www.tycoelectronics.com

MTE Headers, Right-Angle, Polarized/Latching, Surface Mount

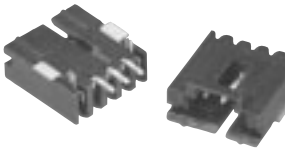

Material and Finish:

Housing—High temperature thermoplastic, Color - Black

Posts—Copper Alloy, plated as follows:

Plating A—Duplex plated .000030 [.00076] gold on contact area, .000100 [.00254] min. tin-lead on solder area, with entire post underplated .000050 [.00127] nickel.

Plating B—Duplex plated .000015 [.00038] gold on contact area, .000100 [.00254] min. tin-lead on solder area, with entire post underplated .000050 [.00127] nickel.

Plating C—.000100 [.00254] tin lead over .000050 [.00127] nickel on entire post

Recommended PC Board Layout

(Refer to MTE Application Spec. 114-25026 for Stencil Aperture Layout Using .006 [0.152] or .008 [0.203] Stencil Thickness)

Technical Documents: pages 2161, 2162

Product Specification
108-25034

Application Specification
114-25026

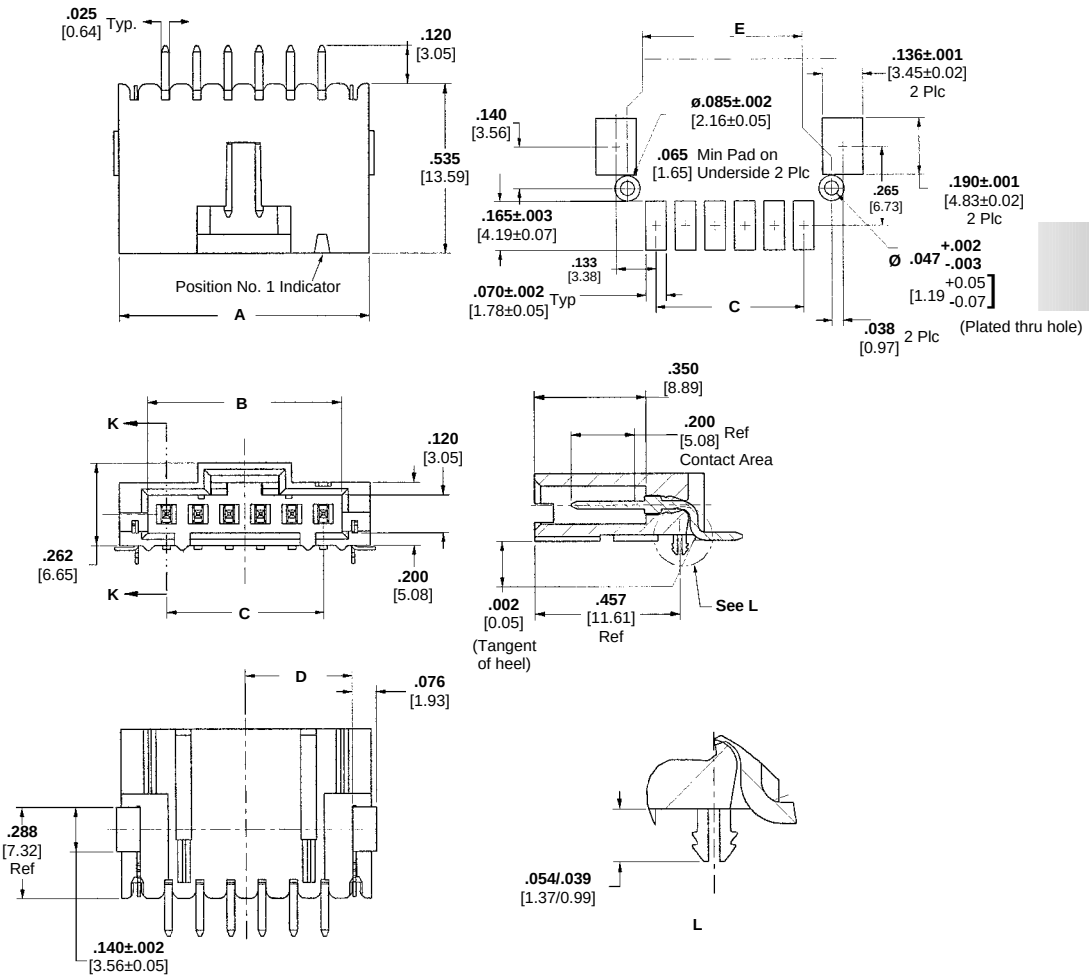

No. of Positions	Dimensions					Part Numbers		
	A	B	C	D	E	Right-Angle Latching SMT Headers		
						Plating A	Plating B	Plating C
2	.400 10.16	.220 5.59	.100 2.54	.140 3.56	.290 7.37	147323-1	147278-1	147324-1
3	.500 12.70	.320 8.13	.200 5.08	.190 4.83	.390 9.91	147323-2	147278-2	147324-2
4	.600 15.24	.420 10.67	.300 7.62	.240 6.10	.490 12.45	147323-3	147278-3	147324-3
5	.700 17.78	.520 13.21	.400 10.16	.290 7.37	.590 14.99	147323-4	147278-4	147324-4
6	.800 20.32	.620 15.75	.500 12.70	.340 8.64	.690 17.53	147323-5	147278-5	147324-5
7	.900 22.86	.720 18.29	.600 15.24	.390 9.91	.790 20.07	147323-6	147278-6	147324-6
8	1.000 25.40	.820 20.83	.700 17.78	.440 11.18	.890 22.61	147323-7	147278-7	147324-7
9	1.100 27.94	.920 23.37	.800 20.32	.490 12.45	.990 25.15	147323-8	147278-8	147324-8
10	1.200 30.48	1.020 25.91	.900 22.86	.540 13.72	1.090 27.69	147323-9	147278-9	147324-9
11	1.300 33.02	1.120 28.45	1.000 25.40	.590 14.99	1.190 30.23	1-147323-0	1-147278-0	1-147324-0
12	1.400 35.56	1.220 30.99	1.100 27.94	.640 16.26	1.290 32.77	1-147323-1	1-147278-1	1-147324-1
13	1.500 38.10	1.320 33.53	1.200 30.48	.690 17.53	1.390 35.31	1-147323-2	1-147278-2	1-147324-2
14	1.600 40.64	1.420 36.07	1.300 33.02	.740 18.80	1.490 37.85	1-147323-3	1-147278-3	1-147324-3
15	1.700 43.18	1.520 38.61	1.400 35.56	.790 20.07	1.590 40.39	1-147323-4	1-147278-4	1-147324-4
16	1.800 45.72	1.620 41.15	1.500 38.10	.840 21.34	1.690 42.93	1-147323-5	1-147278-5	1-147324-5
17	1.900 48.26	1.720 43.69	1.600 40.64	.890 22.61	1.790 45.47	1-147323-6	1-147278-6	1-147324-6
18	2.000 50.80	1.820 46.23	1.700 43.18	.940 23.88	1.890 48.01	1-147323-7	1-147278-7	1-147324-7
19	2.100 53.34	1.920 48.77	1.800 45.72	.990 25.15	1.990 50.55	1-147323-8	1-147278-8	1-147324-8
20	2.200 55.88	2.020 51.31	1.900 48.26	1.040 26.42	2.090 53.09	1-147323-9	1-147278-9	1-147324-9
21	2.300 58.42	2.120 53.85	2.000 50.80	1.090 27.69	2.190 55.63	2-147323-0	2-147278-0	2-147324-0
22	2.400 60.96	2.220 56.39	2.100 53.34	1.140 28.96	2.290 58.17	2-147323-1	2-147278-1	2-147324-1
23	2.500 63.50	2.320 58.93	2.200 55.88	1.190 30.23	2.390 60.71	2-147323-2	2-147278-2	2-147324-2
24	2.600 66.04	2.420 61.47	2.300 58.42	1.240 31.50	2.490 63.25	2-147323-3	2-147278-3	2-147324-3
25	2.700 68.58	2.520 64.01	2.400 60.96	1.290 32.77	2.590 65.79	2-147323-4	2-147278-4	2-147324-4

For complete product information, order Catalog 1307819

Products for Industrial & Commercial Applications

Dimensions are shown for reference purposes only.

Dimensions are in inches and millimeters unless otherwise specified. Values in brackets are metric equivalents.

Specifications subject to change.

Technical Support Center
1-800-522-6752
www.tycoelectronics.com

MTE Headers, Vertical, Polarized/Latching, Surface Mount

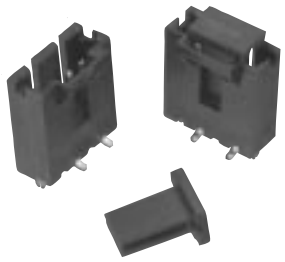

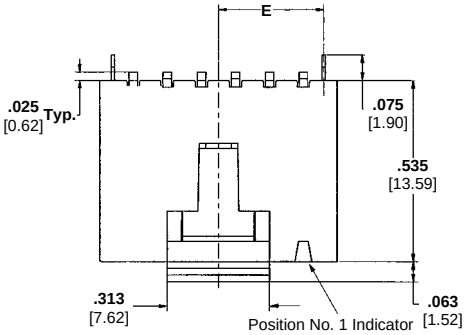

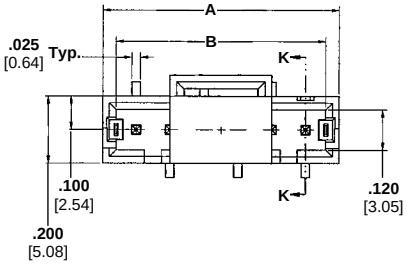

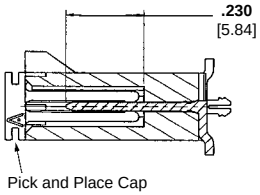

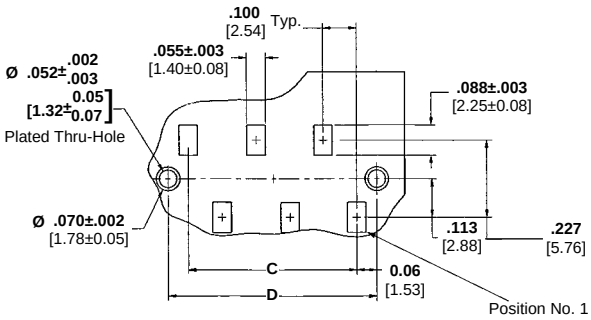

Material and Finish:

Housing—High temperature thermoplastic, Color - Black, 94V-0 rated

Posts—Brass, plated as follows:

Plating A—Duplex plated .000030 [.00076] gold on contact area, .000100 [.00254] min. tin-lead on solder area, with entire post underplated .000050 [.00127] nickel.

Plating B—Duplex plated .000015 [.00038] gold on contact area, .000100 [.00254] min. tin-lead on solder area, with entire post underplated .000050 [.00127] nickel.

Plating C—.000100 [.00254] tin lead over .000050 [.00127] nickel on entire contact/post

Recommended PC Board Layout

(Refer to MTE Application Spec. 114-25026 for Stencil Aperature Layout using .006 [0.152] or .008 [0.203] stencil thickness

Technical Documents: pages 2161, 2162

Product Specification
108-25034

Application Specification
114-25026

No. of Positions	Dimensions A	B	C	D	E	Vertical SMT Headers Part Numbers Plating A	Plating B	Plating C
2	.300 7.62	.220 5.59	.100 2.54	.220 5.60	.110 2.80	1375583-1	1375582-1	1375549-1
3	.400 10.16	.320 8.13	.200 5.08	.320 8.14	.160 4.07	1375583-2	1375582-2	1375549-2
4	.500 12.70	.420 10.67	.300 7.62	.420 10.68	.210 5.34	1375583-3	1375582-3	1375549-3
5	.600 15.24	.520 13.21	.400 10.16	.520 13.22	.260 6.61	1375583-4	1375582-4	1375549-4
6	.700 17.78	.620 15.75	.500 12.70	.620 15.76	.310 7.88	1375583-5	1375582-5	1375549-5
7	.800 20.32	.720 18.29	.600 15.24	.720 18.30	.360 9.15	1375583-6	1375582-6	1375549-6
8	.900 22.86	.820 20.83	.700 17.78	.820 20.84	.410 10.42	1375583-7	1375582-7	1375549-7
9	1.000 25.40	.920 23.37	.800 20.32	.920 23.38	.460 11.69	1375583-8	1375582-8	1375549-8
10	1.100 27.94	1.020 25.91	.900 22.86	1.020 25.92	.510 12.96	1375583-9	1375582-9	1375549-9
11	1.200 30.48	1.120 28.45	1.000 25.40	1.120 28.46	.560 14.23	1-1375583-0	1-1375582-0	1-1375549-0
12	1.300 33.02	1.220 30.99	1.100 27.94	1.220 31.00	.610 15.50	1-1375583-1	1-1375582-1	1-1375549-1
13	1.400 35.56	1.320 33.53	1.200 30.48	1.320 33.54	.660 16.77	1-1375583-2	1-1375582-2	1-1375549-2
14	1.500 38.10	1.420 36.07	1.300 33.02	1.420 36.08	.710 18.04	1-1375583-3	1-1375582-3	1-1375549-3
15	1.600 40.64	1.520 38.61	1.400 35.56	1.520 38.62	.760 19.31	1-1375583-4	1-1375582-4	1-1375549-4
16	1.700 43.18	1.620 41.15	1.500 38.10	1.620 41.16	.810 20.58	1-1375583-5	1-1375582-5	1-1375549-5
17	1.800 45.72	1.720 43.69	1.600 40.64	1.720 43.70	.860 21.85	1-1375583-6	1-1375582-6	1-1375549-6
18	1.900 48.26	1.820 46.23	1.700 43.18	1.820 46.24	.910 23.12	1-1375583-7	1-1375582-7	1-1375549-7
19	2.000 50.80	1.920 48.77	1.800 45.72	1.920 48.78	.960 24.39	1-1375583-8	1-1375582-8	1-1375549-8
20	2.100 53.34	2.020 51.31	1.900 48.26	2.020 51.32	1.010 25.66	1-1375583-9	1-1375582-9	1-1375549-9
21	2.200 55.88	2.120 53.85	2.000 50.80	2.120 53.86	1.060 26.93	2-1375583-0	2-1375582-0	2-1375549-0
22	2.300 58.42	2.220 56.39	2.100 53.34	2.220 56.40	1.110 28.20	2-1375583-1	2-1375582-1	2-1375549-1
23	2.400 60.96	2.320 58.93	2.200 55.88	2.320 58.94	1.160 29.47	2-1375583-2	2-1375582-2	2-1375549-2
24	2.500 63.50	2.420 61.47	2.300 58.42	2.420 61.48	1.210 30.74	2-1375583-3	2-1375582-3	2-1375549-3
25	2.600 66.04	2.520 64.01	2.400 60.96	2.520 64.02	1.260 32.01	2-1375583-4	2-1375582-4	2-1375549-4

For complete product information, order Catalog 1307819

Products for Industrial & Commercial Applications
Dimensions are shown for reference purposes only.
Dimensions are in inches and millimeters unless otherwise specified. Values in brackets are metric equivalents.
Specifications subject to change.
Technical Support Center
1-800-522-6752
www.tycoelectronics.com

Colored MTE Interconnection System-4 position only

Colored Polarized Latching Receptacle Mates to Colored Vertical Header with PC Board orientation:

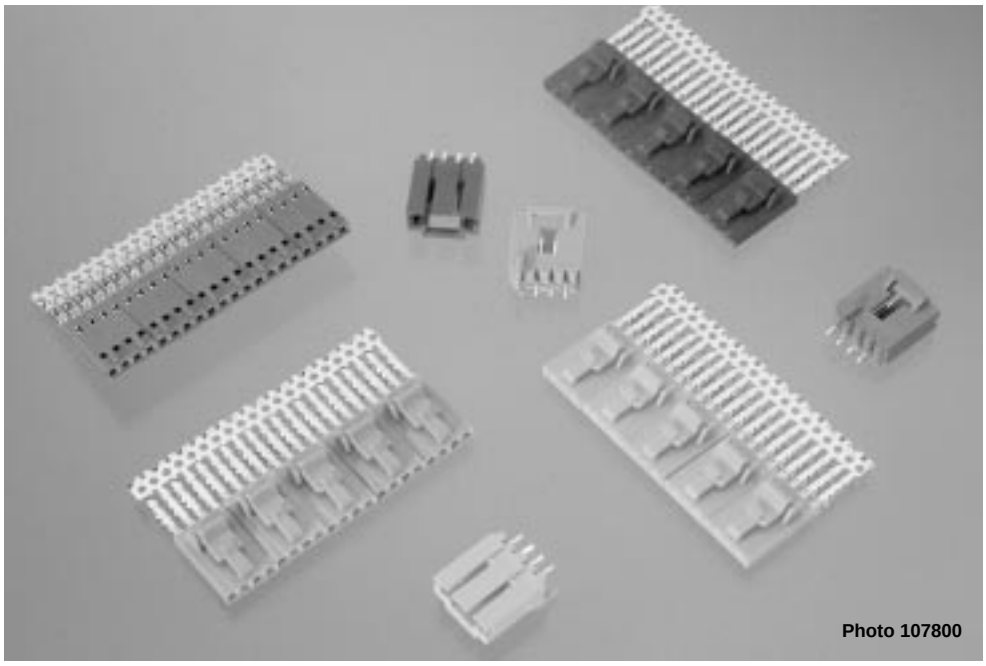
Photo 107800

Material and Finish:

Housing – Color Thermoplastic, 94V-0 rated

Contact/post – Copper alloy, plated .000100-.000200 [0.00254-0.00508] tin-lead over .000050 [0.00127] nickel on entire contact/post.

Technical Documents: pages 2161, 2162

Product Specification
108-25034

Application Specification
114-25026

Refer to pages 2132 and 2143 for line art and customer drawings for specific dimensions.

Note: The .065+/-.003 [1.65+/-0.08] diameter hole, used for PCB orientation, changes in position for headers listed below.

Color	Strip Form Housing Quantities	Receptacle 30-26 AWG [0.05-0.15mm²] Wire	Header	Unloaded Receptacle Housing
Natural/ Beige	5	147048-1	147050-1	147047-1
Green	5	147048-2	147050-2	147047-2
Blue	5	147048-3	147050-3	147047-3
Yellow	5	147048-4	147050-4	147047-4

147050-1

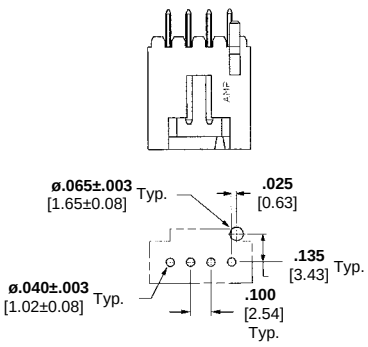

Recommended Hole Layout

147050-2

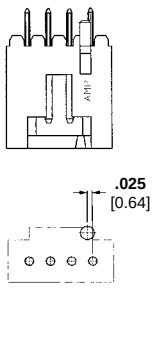

Recommended Hole Layout

147050-3

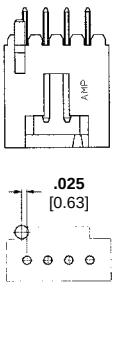

Recommended Hole Layout

147050-4

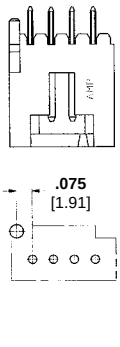

Recommended Hole Layout

PC Board Orientation Feature

For complete product information, order Catalog 1307819

Products for Industrial & Commercial Applications
Dimensions are shown for reference purposes only.
Dimensions are in inches and millimeters unless otherwise specified. Values in brackets are metric equivalents.
Specifications subject to change.
Technical Support Center
1-800-522-6752
www.tycoelectronics.com

Interchangeable Contacts, Wire Crimp (Snap-In)

Material and Finish:

Copper alloy C7025, plated as follows:

Plating A—Duplex plated .000030 [0.00076] min. gold on contact area, .000050 [0.00127] min. tin-lead in crimp area, with entire contact underplated .000050 [0.00127] min. nickel

Plating B—Duplex plated .000015 [0.00038] min. gold on contact area, .000050 [0.00127] min. tin-lead in crimp area, with entire contact underplated .000050 [0.00127] min. nickel

Plating C—.000100 [0.00254] min. bright tin-lead over .000050 [0.00127] min. nickel on entire contact



Keying Plug
Part Number 104072-1
Ten plugs are supplied per strip.
Order quantity reflects the number of strips required.



Photo 4857
Extraction/Lance Reset Tool No. 843477-1

Related Product Data:

Performance Characteristics—page 2178

Housings used in—Short Point—pages 2128

AMPMODU MTE Unloaded Housings—pages 2131, 2132

Application Tooling—pages 2158

Short Point Receptacles

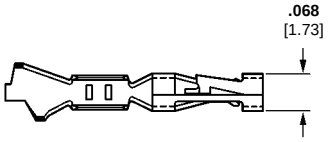

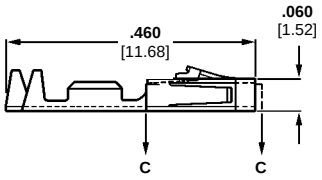

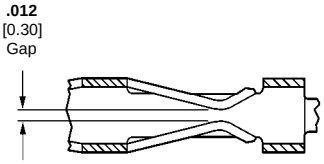

Section C - C

Technical Documents: page 2161, 2162

Product Specification
108-1472, 108-25027

Application Specification
114-25038

Wire Size Range AWG	Wire Size Range [mm²]	Ins. Dia. Range	Finish	Contact Part Number (Standard Pressure) Strip Form	Contact Part Number (Standard Pressure) Loose Piece	Heavy Duty Miniature Applicator for AMP-O-LECTRIC Machine*	Applicator for AMP-O-MATIC Stripper/Crimper Machine	Hand Tool Numbers
32-28	0.03-0.08	**.025-.060** 0.64-1.52	Plating A	104481-4	104481-8	567296-2	466980-1	58438-1
			Plating B	104481-3	104481-7			
			Plating C	104481-2	104481-6			
26-22	0.13-0.3	**.025-.060** 0.64-1.52	Plating A	104480-4	104480-9	567297-2	466981-1	58438-1
			Plating B	104480-3	104480-8			
			Plating C	104480-2	104480-7			
24-20	0.2-0.5	**.025-.060** 0.64-1.52	Plating A	104479-4	104479-7	567298-2	466982-1	58437-1
			Plating B	104479-3	104479-6			
			Plating C	104479-2	104479-5			

*For use with Model "K" machines. Call the Technical Support Center (1-800-522-6752) for part nos. of applicators for use with the Model "G" machines, as well as other bench machines and fully automatic AMPOMATOR lead making machines.

Note: These wire crimp contacts can be intermixed with insulation displacement crimp contacts.

For complete product information, order Catalog 1307819

Products for Industrial & Commercial Applications
Dimensions are shown for reference purposes only.
Dimensions are in inches and millimeters unless otherwise specified. Values in brackets are metric equivalents.
Specifications subject to change.
Technical Support Center 1-800-522-6752 www.tycoelectronics.com

Interchangeable Contacts, Wire Crimp (Snap-In)

Material and Finish:

Phosphor bronze, plated as follows:

Plating A—Duplex plated .000030 [0.00076] gold on contact area, .000030 [0.00076] min. tin-lead in crimp area, with entire contact underplated .000050 [0.00127] nickel

Plating B—Duplex plated .000015 [0.00038] gold on contact area, .000030 [0.00076] min. tin-lead in crimp area, with entire contact underplated .000050 [0.00127] nickel

Plating C—.000100 [0.00254] min. bright tin-lead over .000050 [0.00127] nickel on entire contact



Keying Tool
Part Number 91417-1
This keying tool is used to remove posts from a header assembly, either before or after the header assembly is mounted to a pc board. The removal of posts is necessary when keying plugs are used in mating AMPMODU connectors.



Extraction/Lance Reset Tool No. 843477-1

Pins

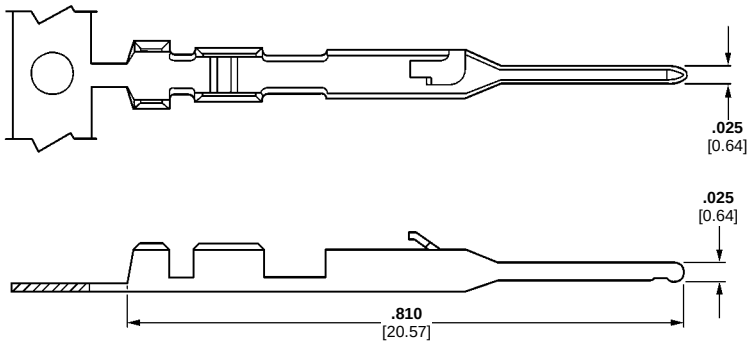

Wire Size Range AWG	Wire Size Range [mm²]	Ins. Dia. Range	Finish	Contact Part Number (Standard Pressure) Strip Form	Contact Part Number (Standard Pressure) Loose Piece	Heavy Duty Miniature Applicator for AMP-O-LECTRIC Machine*	Applicator for AMP-O-MATIC Stripper/ Crimper Machine	Hand Tool Numbers
32-28	0.03-0.08	**.025-.054** 0.64-1.37	Plating A	104506-6	104506-7	—	—	58342-2
			Plating B	104506-4	104506-5	—	—	58342-2
			Plating C	104506-2	104506-3	—	—	58342-2
26-22	0.14-0.32	**.036-.054** 0.91-1.37	Plating A	104505-6	104505-7	567239-2	466983-1	58342-1
			Plating B	104505-4	104505-5	567239-2	466983-1	58342-1
			Plating C	104505-2	104505-3	567239-2	466983-1	58342-1

*For use with Model "K" machines. Call Technical Support Center (1-800-522-6752) for part nos. of applicators for use with the Model "G" machines, as well as other bench machines and fully automatic AMPOMATOR lead making machines.

Note: These wire crimp contacts can be intermixed with insulation displacement crimp contacts.

Product Facts

- **Full line of mass termination tooling offers lowest installed cost for most production needs**
- **Dual cantilever beams with anti-overstress features provide redundant contact of mating post and limit beam deflection, preventing deformation**
- **Redundant insulation displacement slots provide for maximum reliability**
- **Integral wire strain relief on contact prevents wire motion from being transmitted to wire termination areas**
- **Built-in contact post stop protects terminated wire from being disturbed by over-insertion of mating post, helps prevent wire from entering contact area and positively limits mating connector depth**
- **Insulation displacement contacts and crimp, snap-in contacts are interchangeable**
- **Complete serviceability with replacement contacts**
- **Cover styles include low profile (polarized, non-polarized, latching and ejection) and standard profile (hermaphroditic and ejection)**
- **Connector housings may be stacked end-to-end within one pair of covers. All varieties of covers in this catalog are suitable for multiple housing stacking applications similar to the example illustrated in the photograph to the right**
- **Recognized under the Component Program of Underwriters Laboratories Inc., File No. E28476**
- **Certified by Canadian Standards Association, File No. LR 7189**

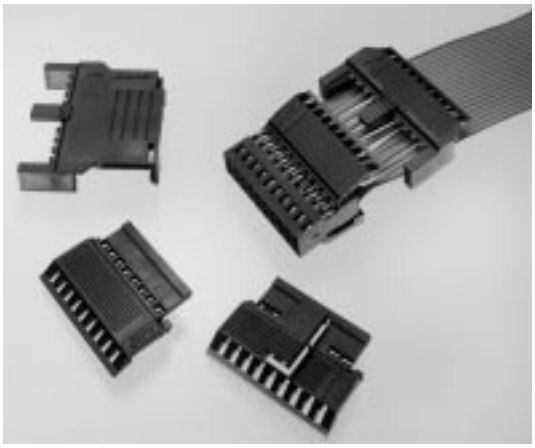

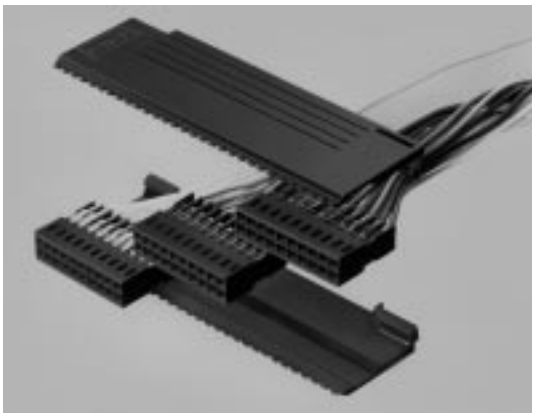

Typical Application of End-to-End Stacking

The AMPMODU MT and Shielded MT Interconnection System offers labor and cost savings through mass termination technology, while maintaining the time-proven reliability of the AMPMODU product family. The MT system is comprised of preloaded, double-row receptacle assemblies with snap-on covers and a variety of shielding hardware and accessories. The system is supported by a full line of mass termination tooling to meet virtually most production needs.

The insulation displacement contact, the heart of the MT system, features a mating interface that is the same as the conventional AMPMODU crimp, snap-in contact, featuring dual cantilever beams, built-in overstress protection and a completely enclosed “box” design.

To reduce EMI/ESD (electromagnetic interference/electrostatic discharge) at the input-output interface, add-on metal shields can be used to convert standard MT connectors to shielded MT connectors.

Performance Characteristics:

Contact Current Rating—3 amperes for single contact in free air. (Amperage could vary due to ambient temperature, wire size and duty cycles.)

Operating Temperature—-65°C to +105°C

Termination Resistance—12 milliohms max.

Max. Mating Force—
High pressure - 26 oz. [7.23 N]
Standard pressure - 9 oz. [2.50 N]

Min. Unmating Force—
High pressure - 5 oz. [1.39 N]
Standard pressure - 1.5 oz. [0.417 N]

Contact Retention in Housing—5 lb. [22.24 N] per contact min.

For complete product information, order Catalog 1307819

Products for Industrial & Commercial Applications
Dimensions are shown for reference purposes only.
Dimensions are in inches and millimeters unless otherwise specified. Values in brackets are metric equivalents.
Specifications subject to change.
Technical Support Center
1-800-522-6752
www.tycoelectronics.com

MT Receptacle Assemblies, Double-Row .100 x .100 [2.54 x 2.54] Centerline

Housings Preloaded with Standard Pressure Contacts



Material and Finish:

Housing—Black thermoplastic, flame retardant

Contacts—Copper alloy, duplex plated .000030 [0.00076] gold on contact area, .000050 [0.00127] min. tin-lead in crimp area, with entire contact underplated .000050 [0.00127] nickel

Related Product Data:

Mateable Connectors—pages 2073, 2076-2078

Cable Insulation Wall Thickness—.015 [0.39] max.

Cable Insulation Diameter—.050 [1.27] max.

Mating Post Length—.222-.273 [5.64-6.94] max.

Performance Characteristics—page 2152

Replacement Contacts—page 2157

Connector Covers—pages 2155, 2156

Application Tooling—pages 2158, 2159

Technical Documents: pages 2161, 2162

Product Specification
108-25015, 108-25018, 108-25030

Application Specification
114-25032

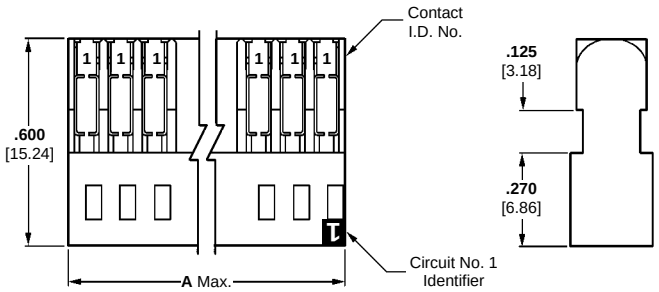

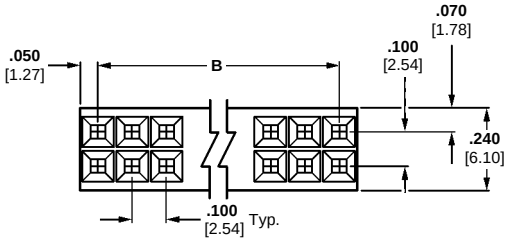

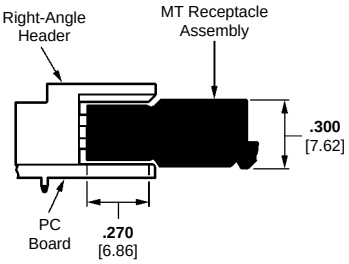

No. of Positions	Dimensions A	Dimensions B	Part Numbers (Stamped) Wire Size Range 30-26 AWG [0.05-0.15 mm²]	26-22 AWG [0.12-0.3 mm²]	22-20 AWG [0.3-0.6 mm²]	Unloaded Housings
6	.300 7.62	.200 5.08	—	102398-1	—	—
8	.400 10.16	.300 7.62	—	102398-2	—	—
10	.500 12.70	.400 10.16	102393-3	102398-3	—	—
12	.600 15.24	.500 12.70	—	102398-4	—	—
14	.700 17.78	.600 15.24	—	102398-5	—	—
16	.800 20.32	.700 17.78	—	102398-6	—	102394-6
18	.900 22.86	.800 20.32	—	102398-7	102448-7	102394-7
20	1.000 25.40	.900 22.86	—	—	102448-8	102394-8
24	1.200 30.48	1.100 27.94	—	1-102398-0	1-102448-0	—
26	1.300 33.02	1.200 30.48	—	1-102398-1	—	1-102394-1
34	1.700 43.18	1.600 40.64	—	1-102398-5	—	—
40	2.000 50.80	1.900 48.26	—	1-102398-8	1-102448-8	—
50	2.500 63.50	2.400 60.96	2-102393-3	—	—	—

Note: Contact **Extraction/Lance Reset Tool No. 843477-3**, see page 2151.

Keying Plugs

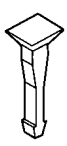

Part Number 86286-1
(Plugs into receptacle contact)



Part Number 87077-2
(Plugs directly into housing)

Material:

Natural color nylon

For complete product information, order Catalog 1307819

Products for Industrial & Commercial Applications
Dimensions are shown for reference purposes only.
Dimensions are in inches and millimeters unless otherwise specified. Values in brackets are metric equivalents.
Specifications subject to change.
Technical Support Center
1-800-522-6752
www.tycoelectronics.com

MT Receptacle Assemblies, Double-Row .100 x .100 [2.54 x 2.54] Centerline

Housings Preloaded with High Pressure Contacts



Material and Finish:

Housing—Black thermoplastic, flame retardant

Contacts—Copper alloy, duplex plated .000030 [0.00076] gold on contact area, .000050 [0.00127] min. tin-lead in crimp area, with entire contact underplated .000050 [0.00127] nickel

Related Product Data:

Mateable Connectors—pages 2073, 2076, 2078

Cable Insulation Wall Thickness—.015 [0.39] max.

Cable Insulation Diameter—.050 [1.27] max.

Mating Post Length—.200-.273 [5.64-6.94] max.

Performance Characteristics—page 2152

Replacement Contacts—page 2157

Connector Covers—pages 2155, 2156

Application Tooling—pages 2158, 2159

Technical Documents: pages 2161, 2162

Product Specification
108-25015, 108-25018, 108-25030

Application Specification
114-25032

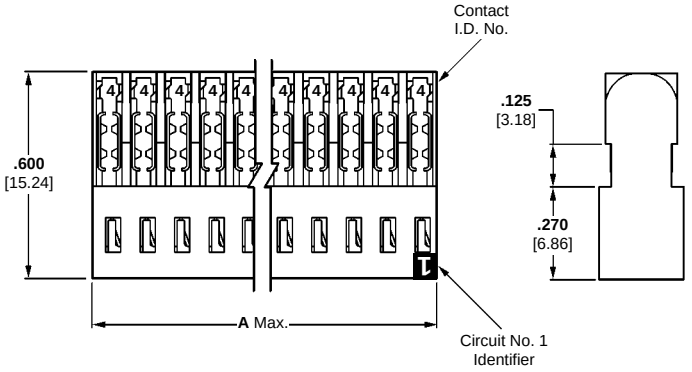

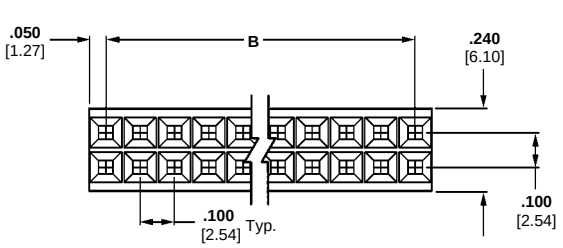

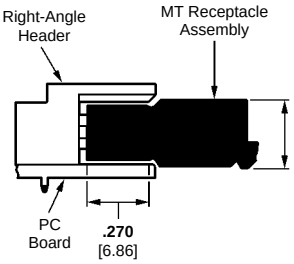

No. of Positions	Dimensions A	Dimensions B	Part Numbers (Stamped*) Wire Size Range 26-22 AWG [0.12-0.3 mm²]
6	**.300** 7.62	**.200** 5.08	102694-1
8	**.400** 10.16	**.300** 7.62	102694-2
10	**.500** 12.70	**.400** 10.16	102694-3
12	**.600** 15.24	**.500** 12.70	102694-4

*Cavity identification — first cavity (one side); AMP Part No. and date code stamped on housing where size permits.
Note: Contact **Extraction/Lance Reset Tool No. 843477-3**, see page 2157.

Keying Plugs

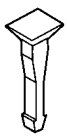

Part Number 86286-1
(Plugs into receptacle contact)

Material:

Natural color nylon

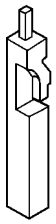

Part Number 87077-2
(Plugs directly into housing)

For complete product information, order Catalog 1307819

Products for Industrial & Commercial Applications
Dimensions are shown for reference purposes only.
Dimensions are in inches and millimeters unless otherwise specified. Values in brackets are metric equivalents.
Specifications subject to change.
Technical Support Center 1-800-522-6752 www.tycoelectronics.com

Low Profile Covers for Double-Row MT Receptacle Assemblies

Material:

Black thermoplastic, flame retardant

Related Product Data:

For use on Double-Row MT Receptacle Assemblies—pages 2153, 2154

Technical Documents: pages 2161, 2162

Product Specification
108-25015, 108-25018, 108-25030

Application Specification
114-25032

Note: See page 2156 for Low Profile Cover Part Nos.

Front Covers

A - Polarizing Cover
(Mates with AMPMODU 4-sided shrouded headers. Refer to pages 2073-2076, 2078.)

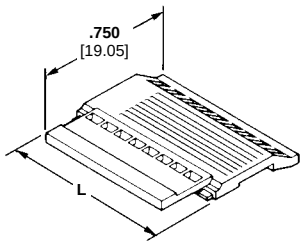

B - Latching Cover
(Mates with AMPMODU 4-sided shrouded headers with extraction slot. Refer to pages 2073, 2076, 2078.)

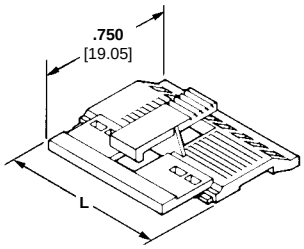

C - Ejection Cover
(Mates with AMP-LATCH universal ejection style pin headers equipped with latching ears, Part Number 102185-2 (with push tabs) or Part Number 102312-2 (without push tabs), see AMP Catalog 82012.

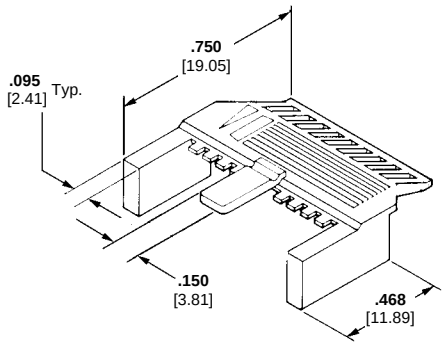

Back Covers

E - For Shielding and Non-Shielding Applications
(For use with any low profile cover.)

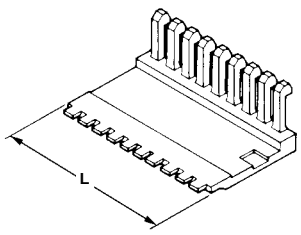

F - For Shielding Applications
(For use with Non-Polarizing Cover only.)

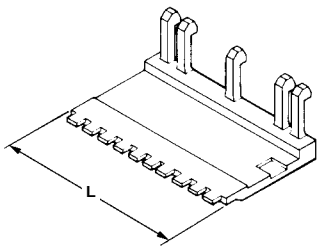

For complete product information, order Catalog 1307819

Products for Industrial & Commercial Applications
Dimensions are shown for reference purposes only.
Dimensions are in inches and millimeters unless otherwise specified. Values in brackets are metric equivalents.
Specifications subject to change.
Technical Support Center
1-800-522-6752
www.tycoelectronics.com

Standard Profile Covers for Double-Row MT Receptacle Assemblies

Material:

Black thermoplastic, flame retardant

Related Product Data:

For use on Double-Row MT Receptacle Assemblies—pages 2153, 2154

Technical Documents: pages 2161, 2162

Product Specification
108-25015, 108-25018, 108-25030

Application Specification
114-25032

G - Hermaphroditic Cover
(Two hermaphroditic covers can be used or one hermaphroditic cover can be used with an H Ejection Cover.)

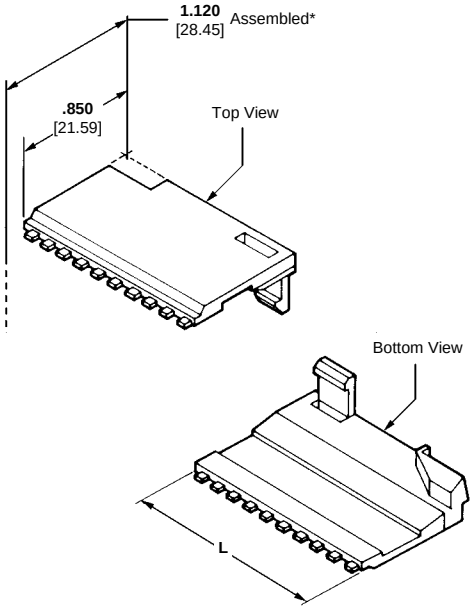

H - Ejection Cover
(Mates with AMP-LATCH universal ejection style pin headers equipped with latching ears, Part Number 102185-2 (with push tabs) or Part Number 102312-2 (without push tabs), see AMP Catalog 82012.

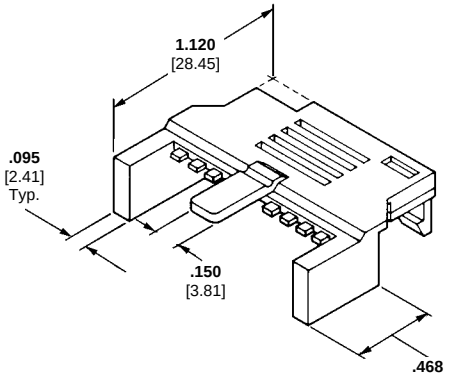

*Dimension applies to cover when installed on connector housing.

No. of Positions	Dimension L	Low Profile Covers			Standard Profile Covers
		Front Covers		Back Covers	
		B Latching	C Ejection	E Shielding and Non-Shielding Applications	G Hermaphroditic
6	**.300** 7.62	—	—	102536-1	—
8	**.400** 10.16	—	—	102536-2	—
10	**.500** 12.70	—	102537-3	102536-3	—
12	**.600** 15.24	102681-1	—	102536-4	—
14	**.700** 17.78	—	—	102536-5	102396-5
16	**.800** 20.32	102681-3	102537-6	102536-6	102396-6
18	**.900** 22.86	—	—	102536-7	—
20	**1.000** 25.40	102681-5	102537-8	102536-8	—
24	**1.200** 30.48	102681-7	1-102537-0	1-102536-0	—
26	**1.300** 33.02	102681-8	1-102537-1	1-102536-1	—
34	**1.700** 43.18	—	—	1-102536-5	—
50	**2.500** 63.50	2-102681-0	2-102537-3	2-102536-3	—

For complete product information, order Catalog 1307819

Products for Industrial & Commercial Applications
Dimensions are shown for reference purposes only.
Dimensions are in inches and millimeters unless otherwise specified. Values in brackets are metric equivalents.
Specifications subject to change.
Technical Support Center
1-800-522-6752
www.tycoelectronics.com

Replacement MT Receptacle Contacts

Insulation Displacement Contacts

Material and Finish:

Copper alloy, duplex plated .000030 [0.00076] gold on contact area, .000100-.000200 [0.00254-0.00508] tin-lead in crimp area, with entire contact underplated .000050 [0.00127] nickel

Related Product Data:

Performance Characteristics—page 2152

Application Tooling—pages 2158, 2159

Technical Documents: pages 2161, 2162

Product Specification
108-25015, 108-25018, 108-25030

Application Specification
114-25032

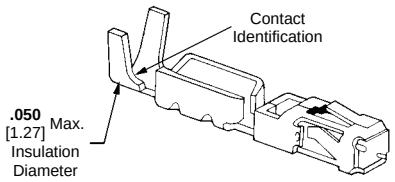

Wire Size Range		Standard Pressure Receptacle		High Pressure Receptacle	
AWG	[mm²]	Contact Ident.	Part Numbers	Contact Ident.	Part Numbers
30-26	0.05-0.15	1	102395-3	4	102641-3
26-22	0.12-0.3	2	102399-3	5	102642-3
22-20	0.3-0.6	3	102449-3	—	—

Note: Termination tooling for MT receptacle insulation displacement contacts is shown on page 2158.

MT receptacle contacts incorporate the following features.

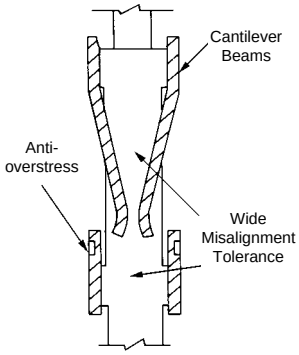

The MT receptacle contact cross-section is primarily rectangular, with rounded corners. Two integral contilever beams contact the mating square male posts. Deflection of these spring members is limited by anti-overstress and excessive deformation is prevented. This feature allows a wide range for tolerance of misalignment of mating contacts.

The configuration of the receptacle completely encloses the spring members preventing damage during handling and assembly, and makes the system compatible with automatic application techniques.



Extraction/Lance Reset Tool No. 843477-3

Application Tooling for Wire Crimp Contacts

Tooling shown on this page is designed to terminate wire crimp contacts used in various AMPMODU wire-to-board connectors. Refer to page 2043 to determine the applicable connectors.

Hand Tools

PRO-CRIMPER II Hand Tool — **Part Number** 354940-1
See Page 13003

CERTI-CRIMP Straight Action Hand Tool — (SAHT)
See Page 13012

Semi-automatic Bench Tooling

AMP-O-LECTRIC Model "G" Terminating Machines — **Part Number** 354500-1, -9, -11
See Page 13005

AMP-O-MATIC Stripper-Crimper Machines — **Part Number** 1320895-1, -2
See Page 13011

Crimp Quality Monitor (CQM) — **Part Number** 1320420-1, -2
See Page 13027

Automatic Tooling

AMP-O-MATOR CLS IV+ Lead-Making Machines — **Part Number** 356500-1, -2
See Page 13008

Crimp Quality Monitor (CQM) — **Part Number** 1320420-1, -2
See Page 13027

Tooling shown on this page is designed to terminate IDC contacts for various AMPMODU wire-to-board connectors. Refer to page 2043 to determine the applicable connectors.



Manual Pistol Grip Tool No. 58074-1



Pneumatic Pistol Grip Tool No. 58075-1



Bench Mounted Pneumatic Power Assembly No. 58338-1

Pistol Grip Manual and Air Powered Tools

The manual pistol grip tool features an interchangeable modular terminating head which also can be used in the pneumatic version, the Bench Mount Pneumatic Power Assembly and the IDC Electric Power Unit. The head terminates one unstripped wire per cycle and indexes the connector to the next terminating position. The head rotates to permit optimum access to the wiring area.

The Bench Mount Pneumatic Power Assembly is air actuated with either a foot or knee switch. This capability frees the operator's hands for optimum positioning.

Modular Heads:

58062-1 (for MT connectors)
58336-1 (for MTE connectors)
58395-1 (for Level V IDC connectors)
58540-1 (for MTE connectors, discrete wire or flat ribbon cable)

For complete product information, order Catalog 1307819

Products for Industrial & Commercial Applications
Dimensions are shown for reference purposes only.
Dimensions are in inches and millimeters unless otherwise specified. Values in brackets are metric equivalents.
Specifications subject to change.
Technical Support Center 1-800-522-6752 www.tycoelectronics.com

Application Tooling for Insulation Displacement Crimp (IDC) Contacts and Connectors

Tooling shown on this page is designed to terminate IDC contacts for various AMPMODU wire-to-board connectors. Refer to page 2043 to determine the applicable connectors.

This modular head tool can be used on any pistol grip tool. It was designed for discrete wire or flat ribbon cable applications.

New

Modular Head
Tool No. 58540-1



Photo 94594

IDC Electric Power Unit

This electrically powered semiautomatic bench machine is designed for applying AMPMODU MTE and MT connectors to discrete wires. It is portable and compact and uses existing pistol grip modular heads. The heads are easily interchanged to run different products. *The IDC Electric Power Unit's cycle rate is approximately 7,200 cycles per hour, with exact production rates depending upon operator dexterity.

Modular Heads:

58062-1 (for MT connectors)
58336-1 (for MTE connectors)



IDC Electric Power Unit
No. 931800-1

*A tube-fed track assembly, Part No. 856675-1, also can be used with MTE Connectors.

Tooling shown on this page is designed to terminate IDC contacts for various AMPMODU wire-to-board connectors. Refer to page 2043 to determine the applicable connectors.

Bench Mount Arbor Tools

Manual Arbor Tool
Tool Components:

Tool Frame — **Part Number** 91085

Applicator — **Part Number** 91415-1

Wire Organizer Assembly, for Discrete Wire — **Part Number** 527085-1
See Page 13015

Pneumatic Arbor Tool
Tool Components:

Tool Frame — **Part Number** 91112-3

Applicator — **Part Number** 91415-1

Upper Tool Mount — **Part Number** 507145-1

Wire Organizer Assembly, for Discrete Wire — **Part Number** 527085-1
See Page 13015

Semi-automatic Machines for Discrete Wire

Electric Discrete Wire Terminating Machines — **Part Number** 58020-1, -2, -4, -5
See Page 13017

Semi-automatic Machines for Ribbon Cable

Ribbon Cable Terminator (Tube-Fed) — **Part Number** 856002-1
See Page 13017

2700-lb Pneumatic Power Units (for end-notching ribbon cable — **Part Number** 312522-1, -2, -3, -4
Notching Dies:
Part Number 854449-1 (for 24-22 AWG [0.2-0.6mm^2] Wire)
Part Number 854449-2 (for 28-26 AWG [0.8-0.15mm^2] Wire)
See Page 13015

Semi-automatic Machines for Jacketed Cable

CHAMPOMATOR Model 2.5 Terminating Machine — **Part Number** 354786

Series Controller — **Part Number** 852423-1, -3
See Page 13018

Automatic Machines for Jacketed Cable

CHAMPOMATOR Model 3A Terminating Machine — **Part Number** 662600 Series
See Page 13019

Technical Documents for Board-to-Board Products

Various technical documents are available for your use.

Product Specifications describe technical performance characteristics and verification tests. They are intended for the Design, Component and Quality Engineers.

Receptacle Assemblies and Unshrouded Breakaway Headers, Surface-Mount — Pages 2069, 2100-2103:
108-25017 Interconnection System, AMPMODU Two-Piece
108-25022 Interconnection System, AMPMODU Mod. IV Vertical Assemblies
108-25026 Interconnection System, AMPMODI Mod. II Standard Pressure Receptacle Assembly and Header

Two-Piece Printed Circuit Board Connectors — Pages 2106-2113:
108-16 ACTION PIN Contacts
108-25017 Interconnection System, AMPMODU Two-Piece
108-25027 Interconnection System, AMPMODU Mod. II Short-Point Receptacle Assembly and Header

Receptacle Assemblies, Horizontal and Vertical Board Mount — Pages 2088-2099:
108-9007 Interconnection System, AMPMODU Mod. II Standard, Short-Point and High-Pressure Receptacle Assemblies with Mating Headers
108-25022 Interconnection System, AMPMODU Mod. IV Vertical Assemblies
108-25026 Interconnection System, AMPMODU Mod. II Standard Pressure Receptacle Assembly and Header
108-25027 Interconnection System, AMPMODU Mod. II Short-Point Receptacle Assembly and Header

.025 [0.64] Square Posts, Headers, Accessories and Tooling — Pages 2047-2060, 2064-2068, 2071-2078, 2081-2087:
108-16 ACTION PIN Contacts
108-25026 Interconnection System, AMPMODU Mod. II Standard Pressure Receptacle Assembly and Header

---

Application Specifications describe requirements for using the product in its intended application, and/or crimping information. They are intended for the Packaging and Design Engineers and the Setup person.

Two-Piece Printed Circuit Board Connectors — Pages 2106-2112:
114-9009 Header, Two-Piece, Double Row, AMPMODU, Application of

Receptacle Assemblies, Horizontal and Vertical Board Mount — Pages 2088-2099:
114-25018 Receptacle Assembly, PC Board Mounted, Vertical, AMPMODU Mod. II and IV, Application of

.025 [0.64] Square Posts, Headers, Accessories and Tooling — Pages 2047-2060, 2064-2068, 2071-2078, 2081-2087:
114-25028 AMP Headers with ACTION PIN Contacts, Application

Instruction Sheets provide instructions for assembling or applying the product. They are intended for the Manufacturing Assembler or Operator.

Two-Piece Printed Circuit Board Connectors — Pages 2106-2112:
408-2636 ACTION PIN Contact Rear Insertion/Extraction Tool 265871-7
408-9054 Seating Tools
408-9185 ACTION PIN Contact Front Extraction Tool 58209-1

Receptacle Assemblies, Horizontal and Vertical Board Mount — Pages 2088-2099:
408-7297 Inserting Solder Tine Receptacle Contacts in AMPMODU Mod. II Horizontal Connectors
408-7411 Suggestions for Flow Soldering Vertical AMPMODU Receptacles
408-7700 Replacing Solder Tine Receptacle Contacts in AMPMODU Mod. II and Mod. IV Vertical Connectors

.025 [0.64] Square Posts, Headers, Accessories and Tooling — Pages 2047-2060, 2064-2068, 2071-2078, 2081-2087:
408-2636 ACTION PIN Contact Rear Insertion/Extraction Tool 265871-7
408-6944 AMP Uninsulated Bandolier Post Insertion Tool 92419-1
408-7977 End Shrouds for AMPMODU Double Row, Straight Posts, .100 x .100 [0.64 x 0.64] Centers
408-7878 Barrier Inserts for AMPMODU Headers
408-9009 Hand Tool 91046-1 for Breakaway Headers
408-9054 Seating Tool for ACTION PIN Contact Headers, 91170 Series
408-9185 ACTION PIN Contact Front Extraction Tool 58209-1
408-9707 Tool Kit 314818-1 for Breakaway Headers

Handbook 5697 **Guide to Application of ACTION PIN Contact Connectors**

For complete product information, order Catalog 1307819

Products for Industrial & Commercial Applications
Dimensions are shown for reference purposes only.
Dimensions are in inches and millimeters unless otherwise specified. Values in brackets are metric equivalents.
Specifications subject to change.
Technical Support Center 1-800-522-6752 www.tycoelectronics.com

Technical Documents for Wire-to-Board Products

Various technical documents are available for your use.

Product Specifications describe technical performance characteristics and verification tests. They are intended for the Design, Component and Quality Engineers.

Mod. IV Wire-Applied Contacts and Housings — Pages 2116-2125:
108-25007 Interconnection System, AMPMODU Mod. V Wire-Applied (High Pressure)
108-25019 AMPMODU Mod. IV Male Connectors
108-25020 Interconnection System, AMPMODU Mod. IV (Standard Pressure)
108-25021 Interconnection System, AMPMODU Mod. IV (Intermediate Pressure)

Short-Point Wire-Applied Contacts and Housings — Pages 2126-2128:
108-1472 Short-Point Contacts and Housings

AMPMODU MTE Interconnection System — Pages 2129-2148:
108-25034 AMPMODU MTE Connectors

AMPMODU MT and Shielded MT Interconnection System — Pages 2152-2157:
108-25015 AMPMODU MT Standard Pressure Connectors
108-25018 AMPMODU MT High Pressure Connectors
108-25030 AMPMODU MT Shielding Accessories

Application Specifications describe requirements for using the product in its intended application, and/or crimping information. They are intended for the Packaging and Design Engineers and the Setup person.

Mod. IV Wire-Applied Contacts and Housings — Pages 2116-2125:
114-25003 AMPMODU Mod. IV (Standard Pressure), Mod. IV.V (Intermediate Pressure) and Mod. V (High Pressure) Receptacle Contacts, Application of
114-25016 AMPMODU Mod. IV Crimp Pin Contact

Short-Point Wire-Applied Contacts and Housings — Pages 2126-2128:
114-25038 Short-Point Contacts and Housings

AMPMODU MTE Interconnection System — Pages 2129-2148:
114-25026 AMPMODU MTE Interconnection System

AMPMODU MT and Shielded MT Interconnection System — Pages 2152-2157:
114-25032 AMPMODU MT Interconnection System and Shielding Accessories, Application of

Technical Documents for Wire-to-Board Products

Instruction Sheets provide instructions for assembling or applying the product. They are intended for the Manufacturing Assembler or Operator.

Mod. IV Wire-Applied Contacts and Housings — Pages 2116-2125:

408-4379 AMP PRO-CRIMPER II Hand Tool
408-7481 AMP Extraction Tool 91065-1 for AMPMODU Wire-Applied Housings 86308
408-7538 AMP Hand Tool 90202-2
408-7935 AMPMODU Receptacle Connectors with Strain Relief/Pull Tabs
408-9222 AMP Hand Tool 90418-1
408-9231 AMP Hand Tool 90417-1
408-9453 AMP Extraction Tools 843996 and 843477 for Removing AMPMODU Crimp Snap-In Receptacle Contacts from Wire-Applied Housings

AMPMODU MTE Interconnection System — Pages 2129-2148:

408-6789 AMP Pneumatic Pistol Handle 58075-1
408-6790 AMP Manual Pistol Handle 58074-1
408-6919 AMPMODU MTE Connectors
408-8236 MTE Head Assembly for Dicrete Wire or Flat Ribbon Cable
408-9230 AMP Keying Tool 91417-1
408-9359 MTE Modular Terminating Head 58336-1
408-9393 AMP Pneumatic Bench Assy. 58338-1
408-9407 AMP Hand Crimp Tool 58342-1 and 58342-2
408-9453 AMP Extraction Tools 843996 and 843477 for Removing AMPMODU Crimp Snap-In Receptacle Contacts from Wire-Applied Housings
408-9515 Ribbon Cable Notcher 85449-[]
408-9590 AMP Hand Crimp Tool 58438-1
408-9593 AMP Hand Crimp Tool 58437-1
409-5746 AMP Electric Power Unit 931800-1
409-5832 MTE Ribbon Cable Terminator 856002-1

AMPMODU MT and Shielded MT Interconnection System — Pages 2151-2157:

408-6532 AMPMODU MT Connectors
408-9453 AMP Extraction Tools 843996 and 843477 for Removing AMPMODU Crimp Snap-In Receptacle Contacts from Wire-Applied Housings

Product Facts

- **Rugged connector system featuring .031 x .062 (0.79 x 1.57) posts with mating receptacles.**
- **Current rating 5 amps max per contact. Varies due to ambient temperature, wire size and duty cycles.**
- **Available for board-to-board and wire-to-board applications.**
- **Posts available on strip for machine application directly to pc board or in housings for board mounting.**
- **Receptacles available for board mounting or wire crimping.**
- **Contacts available in both tin and gold plating.**
- **Flame retardant thermoplastic housings 94V-0 rated.**
- **Locking Clip contacts available to mate with .031 x .062 posts.**
- **Recognized under the Component Program of Underwriters Laboratories Inc., File No. E28476**
- **Certified by Canadian Standards Association, File No. LR 16455**

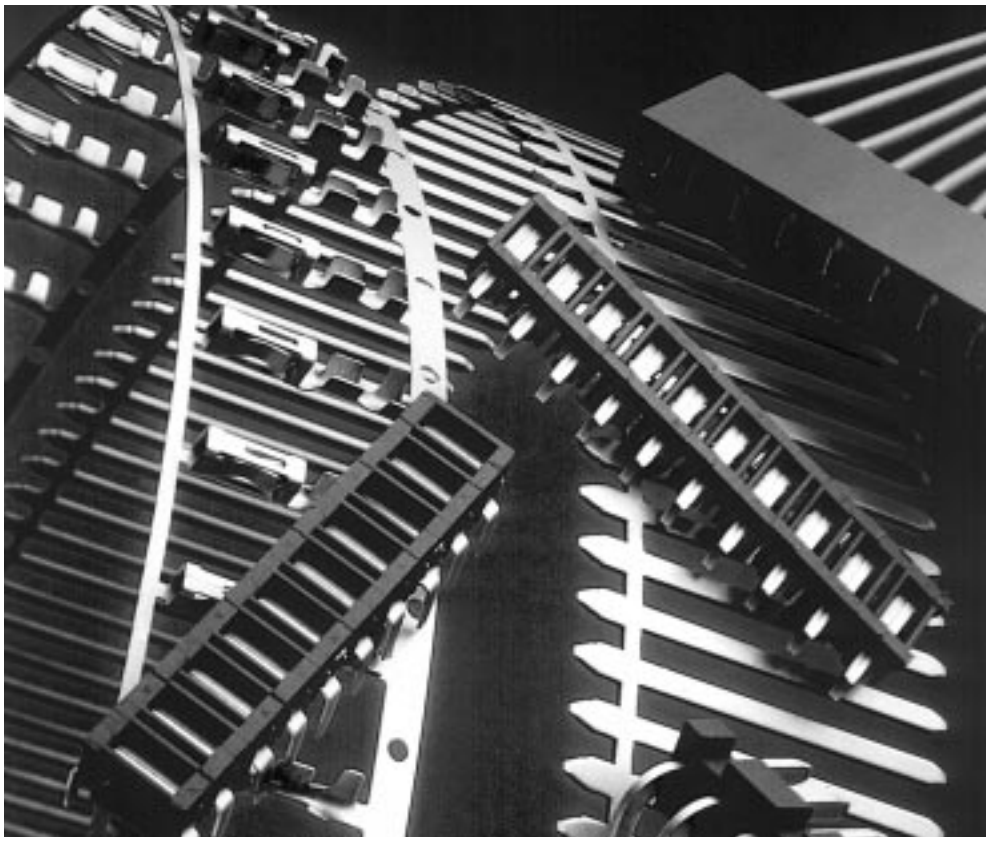

The .031 x .062 [0.79 x 1.57] interconnection system has served as an industry standard for modular packaging for over three decades. It is a rugged, large scale system designed for board-to-board and board-to-wire or cable applications that has offered millions of reliable interconnections and countless mating cycles. This versatile interconnection system successfully meets the requirements for most modular power supply packaging.

Board mounted receptacles and receptacle assemblies are available in various geometries, offering packaging interconnections that include perpendicular, parallel and stacking capabilities. Machine applied terminations, through matched application equipment, are geared to virtually any production requirement, with the goal of low applied cost.

Crimp snap-in receptacles for 26-18 AWG [0.12 – 0.9mm^2] wire provide excellent discrete wire terminations. Housings for these contacts provide for ease of handling terminations in high density applications.

AMPMODU mating posts are supplied typically as header assemblies. They are available in various sizes to meet the interconnection and packaging requirements of your system. However, in instances where packaging configurations do not lend themselves to the economies of assemblies, Tyco Electronics can provide for the discrete location of individual posts and receptacles.

If your interconnections require Top Entry, Bottom Entry and/or Side Entry for perpendicular, parallel and stacked configurations, the .031 x .062 [0.79 x 1.57] interconnection system can fulfill your needs with the lowest applied cost through efficient interconnections and supporting application equipment.

For complete product information, order Catalog 1307819

AMPMODU .031 x .062 [0.79 x 1.57] Interconnection System

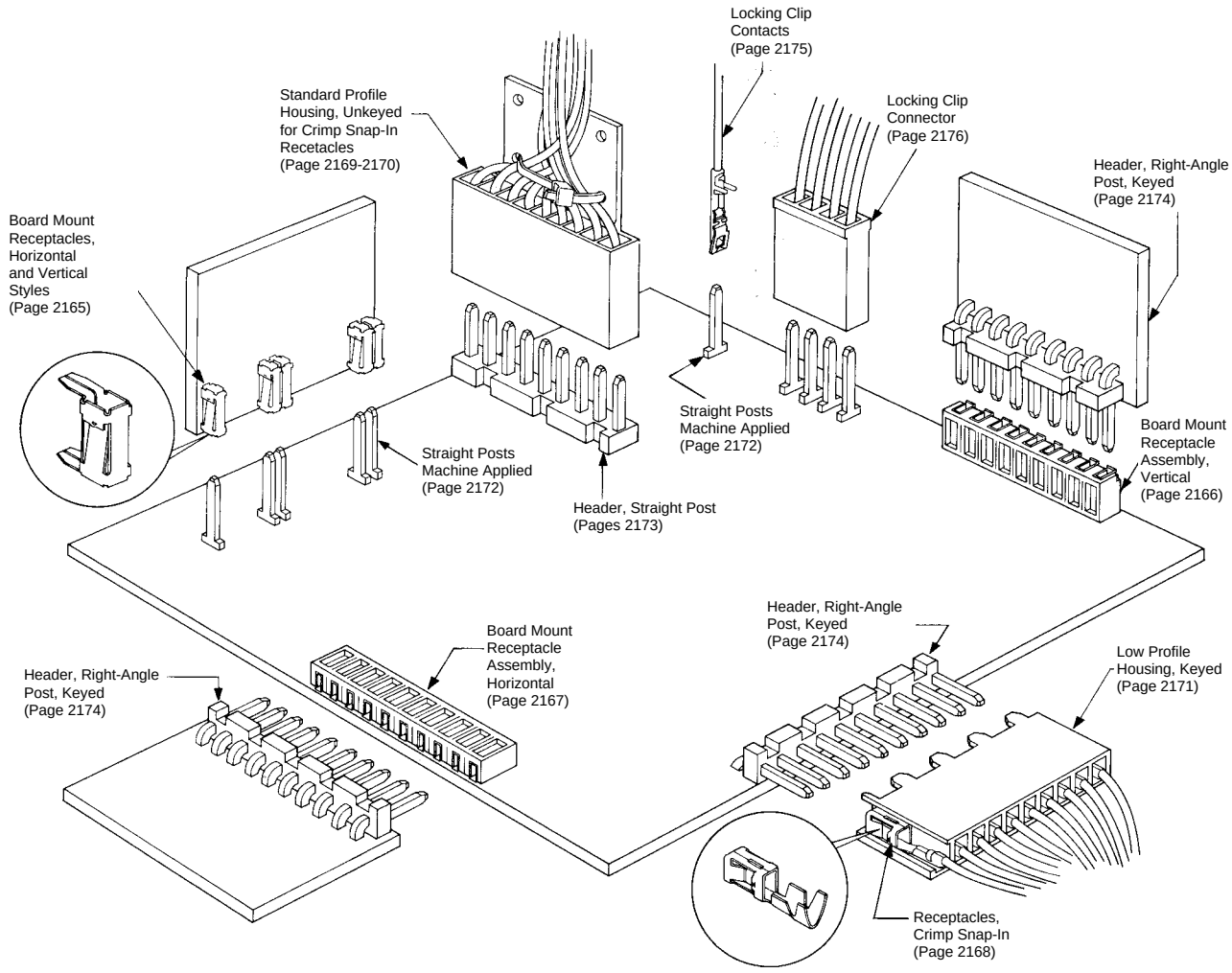

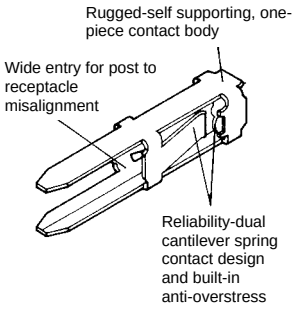

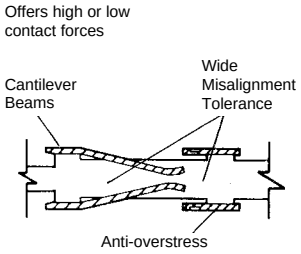

The AMPMODU receptacle cross-section is primarily rectangular, with rounded corners. Two integral cantilever beams contact the mating square or rectangular posts. Deflection of these spring members is limited by anti-overstress and excessive deformation is prevented. This feature allows a wide range of tolerances for misalignment of mating contacts. The configuration of the receptacle completely encloses the spring members help prevent damage during handling and assembly and makes the system compatible with automatic application techniques.

This design also permits the use of the receptacles without housings or encapsulation.

Note: Application of a contact lubricant is part of the manufacturing process of all AMPMODU tin-plated crimp products. However, it is not part of the manufacturing process of products that customers will solder, then clean. For these products, Tyco Electronics recommends that customers purchase a contact lubricant. (See application specification 114-25004 for further information.)

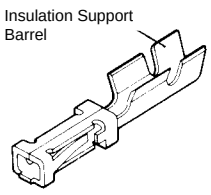

Wire Crimp Receptacle

For complete product information, order Catalog 1307819

Products for Industrial & Commercial Applications
Dimensions are shown for reference purposes only.
Dimensions are in inches and millimeters unless otherwise specified. Values in brackets are metric equivalents.
Specifications subject to change.
Technical Support Center 1-800-522-6752 www.tycoelectronics.com

Mod I Receptacles, Board Mount, .031 x .062 [0.79 x 1.57] Centerline

Vertical and Horizontal Board Mount

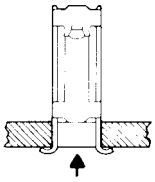

Bottom Post Entry Type A

Top Post Entry Type B

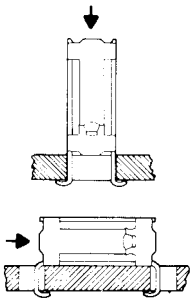

Horizontal Post Entry Type C

Receptacle Styles

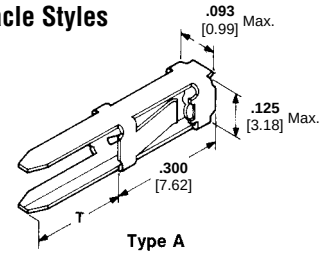

Type A

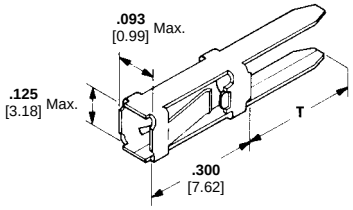

Type B

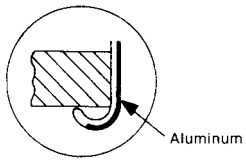

Typical Solder Resist Tab (Type A or B)

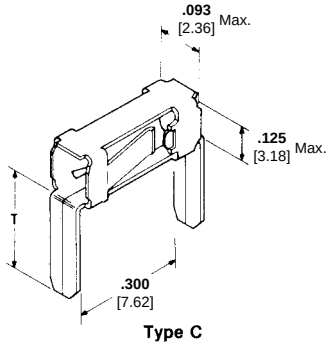

Type C

J-Receptacle centers may vary depending on requirements. For individual receptacles, minimum nominal centerline spacing between adjacent receptacles is .150 [3.81]; for receptacle assemblies, centerline spacing between adjacent receptacles is .156 [3.96]. The .003 [0.08] tolerances are not to accumulate over length of board. For solder mask, see AMP Instruction Sheet 408-7411.

Note: Drawings depict normal use of the contact in a one or two-sided circuit board. When using plated thru-holes, refer to AMP Engineering Report ER-001 and AMP Instruction Sheet 408-7411. For solder mask, see AMP Instruction Sheet 408-7411.

Related Product Data:

Recommended Board Layout for Type C—page 2167

Mates with

Machine Applied Posts—page 2172

Headers—pages 2173, 2174

Application Tooling—page 2177

Performance Specifications—page 2178

Technical Documents: page 2178

Keying Plug

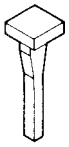

Part Number 86181-2
Use in Board Mount Receptacles
Receptacle Styles

Material and Finish:

Copper alloy, plated as follows:

Plating A —Selectively plated .000030 [0.00076] gold on contact area, with gold flash over .000050 [0.00127] nickel on entire contact

Plating B—.000079 [0.00201] min. tin on entire contact

Plating C—(Solder Resist)-.000030 [0.00076] gold over .000050 [0.00127] nickel on contact area, .000500 [0.01270] aluminum on inside area of solder tines; remainder of contact unfinished

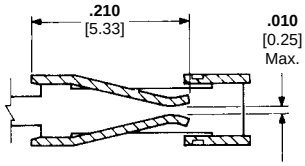

Standard Pressure Receptacle

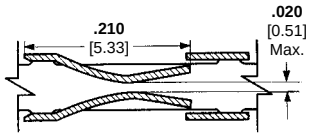

High Pressure Receptacle

Type	Board Thickness Range	(Ref. Pg. Above) Dimension T	Finish	Standard Pressure Part Numbers		High Pressure Part Numbers		Insertion Applicator Number for "U" Frame Machine
				Strip Form	Loose Piece	Strip Form	Loose Piece	
A	**.070-.055** 1.78-1.40	**.112** 2.84	Plating A	86477-2	86480-2	—	—	466376-1
			Plating B	86477-3	—	87316-3	—	466376-1
			Plating C (Solder Resist)	87772-2	—	—	—	466376-1
B	**.070-.055** 1.78-1.40	**.112** 2.84	Plating A	87003-1	87105-1	—	—	466376-1
			Plating B	87003-2	—	—	—	466376-1
C	**.103-.055** 2.62-1.40	**.145** 3.68	Plating A	—	85493-4	—	—	565967-3
			Plating B	—	—	—	86434-1	

Notes: 1. All strip form parts in packaged quantities of 5,000 each.
2. All loose piece parts in packaged quantities of 500 each.

For complete product information, order Catalog 1307819

Products for Industrial & Commercial Applications

Dimensions are shown for reference purposes only.

Dimensions are in inches and millimeters unless otherwise specified. Values in brackets are metric equivalents.

Specifications subject to change.

Technical Support Center
1-800-522-6752
www.tycoelectronics.com

Mod I Receptacle Assemblies, Vertical Board Mount, .031 x .062 [0.79 x 1.57] Centerline

Single Row .156 [3.96] Centerline

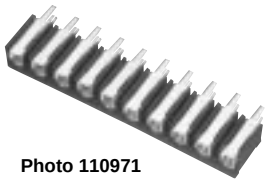

Photo 110971

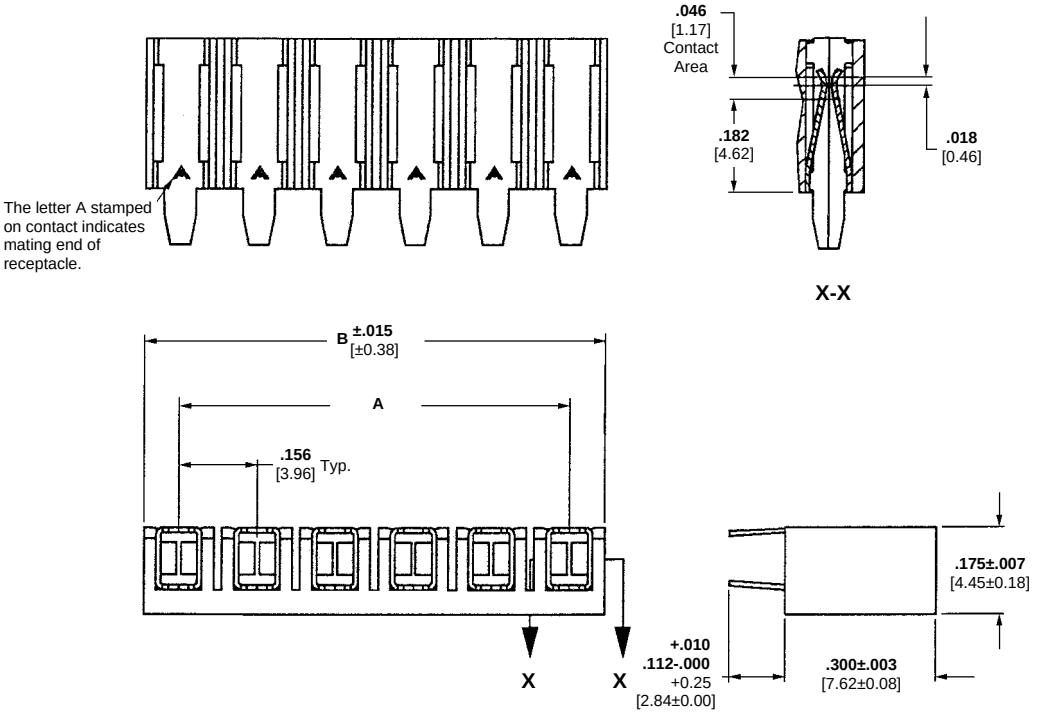

Material and Finish:

Housing—Black thermoplastic, 94V-0 rated

Contacts—Copper alloy, plated as follows:

Plating A—Selectively plated .000030 [0.00076] gold on contact area, with gold flash over .000050 [0.00127] nickel on entire contact

Plating B—.000079 [0.00201] min. tin on entire contact

Plating C—(Solder Resist)-.000030 [0.00076] gold over .000050 [0.00127] nickel on contact area, .000500 [0.01270] aluminum on inside area of solder tines; remainder of contact unfinished

Related Product Data:

Recommended Board Layout—page 2165

Mates with
Machine Applied Posts—page 2172

Headers—pages 2173, 2174

Performance Specifications—page 2178

Technical Documents: page 2178

No. of Positions	Dimensions A	Dimensions B	Part Numbers Type A Standard Pressure Plating C	Part Numbers Type B Standard Pressure Plating A	Part Numbers Type B Standard Pressure Plating B
4	**.468** 11.89	**.624** 15.85	—	87986-4	—
6	**.780** 19.81	**.936** 23.77	87989-6	87986-6	—
10	**1.404** 35.66	**1.560** 39.62	—	—	1-87985-0

Keying Plug

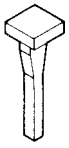

Part Number 86181-2
(Use in Board Mount Receptacles)

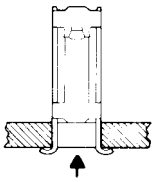

Post Entry Type A

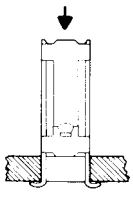

Post Entry Type B

For complete product information, order Catalog 1307819

Products for Industrial & Commercial Applications

Dimensions are shown for reference purposes only.

Dimensions are in inches and millimeters unless otherwise specified. Values in brackets are metric equivalents.

Specifications subject to change.

Technical Support Center
1-800-522-6752
www.tycoelectronics.com

Mod I Receptacle Assemblies, Horizontal Board Mount, .031 x .062 [0.79 x 1.57] Centerline

Single Row .156 [3.96] Centers

Material and Finish:

Housing—Black thermoplastic, 94V-0 rated

Contacts—Copper alloy, plated as follows:

Plating A—Selectively plated .000030 [0.00076] gold contact area, with gold flash over .000050 [0.00127] nickel on entire contact

Plating B—.000079 [0.00201] min. tin on entire contact

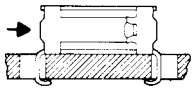

Post Entry Type C

Related Product Data:

Mates with
Machine Applied Posts—page 2172

Headers—pages 2173, 2174

Performance Specifications—page 2178

Technical Documents: page 2178

Keying Plug

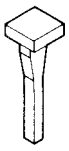

Part Number 86181-2
(Use in Board Mount Receptacles)

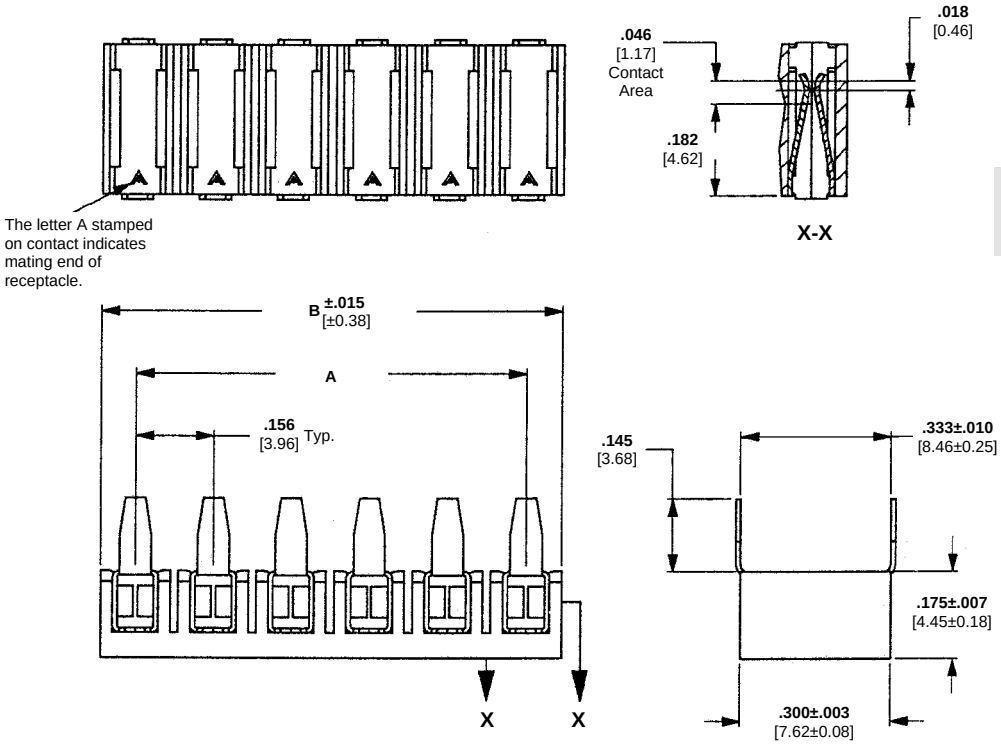

The mating post length is depicted by the A dimension on page 134 (machine applied posts) and the C dimension on pages 135, 136 (headers).

H-Receptacle centers may vary depending on requirements. For individual receptacles, minimum nominal centerline spacing between adjacent receptacles is .125 [3.18] for receptacle assemblies, centerline spacing between adjacent receptacles is .156 [3.96]. The .003 [0.08] tolerances are not to accumulate over length of board.

No. of Positions	Dimensions		Part Numbers		
	A	B	Standard Pressure		High Pressure
			Plating A	Plating B	Plating B
4	**.468** 11.89	**.624** 15.85	87988-4	—	87995-4
8	**1.092** 27.74	**1.248** 31.70	—	87987-8	—

Mod I Receptacles, Crimp Snap-In (Wire Applied), .031 x .062 [0.79 x 1.57] Centerline

Material and Finish:

Copper alloy, plated as follows:

Plating A—Selectively plated .000030 [0.00076] gold on contact area, with gold flash over .000050 [0.00127] nickel on entire contact

Plating B—.000016 [0.00041] min. tin on entire contact

Related Product Data:

Housings used in—pages 2169-2171

Mate with Machine Applied Posts—page 2172

Headers—pages 2173, 2174

Application Tooling—page 2177

Performance Specification—page 2178

Technical Documents: page 2178

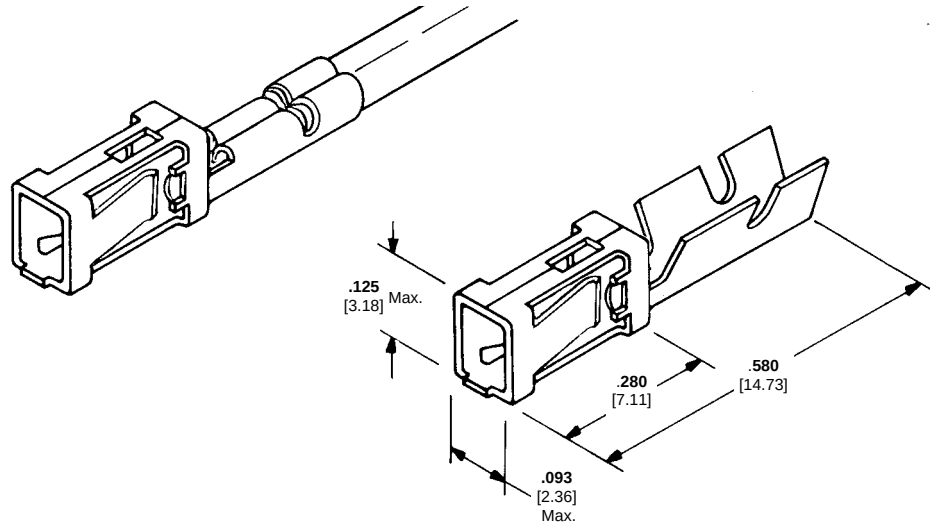

Wire Size Range AWG [mm²]	Ins. Dia. Range	Finish	Standard Pressure			
			Strip Form		Loose Piece	
			Packaged Quantities	Part Numbers	Packaged Quantities	Part Numbers
22-18 0.3-0.9	**.051-.090** 1.30–2.29	Plating A	5,000	—	500	102103-2
		Plating B	5,000	102099-5	500	—

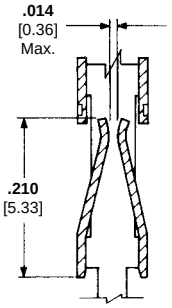

Standard Pressure Receptacle

Wire Size Range AWG [mm²]	Applicator (Standard Pressure)			Premium CERTI-CRIMP Hand Tool Part Number
	Part Number	Type	Used With Machine	
22-18	466764-3	HDM	Model "G" (AMP-O-LECTRIC)	90274-2
	466764-2	HDM	Model "K" (AMP-O-LECTRIC)	
	466764-1	HDM	CLS IV+ (AMPOMATOR)	
	1016605-1	Applicator 2000	Model "G", "K" and CLS IV+	
	466937-1	SCA	Stipper-Crimper (AMP-O-MATIC)	

AMP-O-LECTRIC KII Machine. Applicators also available for AMPOMATOR Lead Making Machines and Stripper/Crimper Machines. Consult Tyco Electronics.

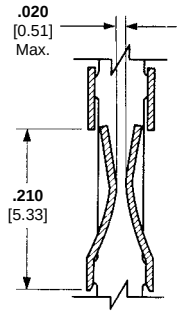

High Pressure Receptacle

Wire Size Range AWG [mm²]	Ins. Dia. Range	Finish	High Pressure			
			Strip Form		Loose Piece	
			Packaged Quantities	Part Numbers	Packaged Quantities	Part Numbers
22-18 0.3-0.9	**.051-.090** 1.30–2.29	Plating A	5,000	102100-2	500	102104-2
		Plating B	5,000	102100-5	500	102104-3
26-22 0.12-0.4	**0.42-.073** 1.07-1.85	Plating A	5,000	102102-2	500	102106-2

Wire Size Range AWG [mm²]	Applicator (High Pressure)			Premium CERTI-CRIMP Hand Tool Part Number
	Part Number	Type	Used With Machine	
22-18 0.3-0.9	466764-3	HDM	Model "G" (AMP-O-LECTRIC)	90274-2
	466764-2	HDM	Model "K" (AMP-O-LECTRIC)	
	466764-1	HDM	CLS IV+ (AMPOMATOR)	
26-22 0.12-0.4	466937-1	SCA	Stipper-Crimper (AMP-O-MATIC)	90328-1
	466763-2	HDM	Model "K" (AMP-O-LECTRIC)	
	466763-1	HDM	CLS IV+ (AMPOMATOR)	

AMP-O-LECTRIC KII Machine. Applicators also available for AMPOMATOR Lead Making Machines and Stripper/Crimper Machines. Consult Tyco Electronics.



Extraction Tool Part Number 843473-1
Part Instruction Sheet 408-9451

For complete product information, order Catalog 1307819

Products for Industrial & Commercial Applications

Dimensions are shown for reference purposes only.

Dimensions are in inches and millimeters unless otherwise specified. Values in brackets are metric equivalents.

Specifications subject to change.

Technical Support Center
1-800-522-6752
www.tycoelectronics.com

Mod I Receptacle Housings, Standard Profile, Unkeyed, .031 x .062 [0.79 x 1.57] Centerline

Single Row, .156 [3.96] Centers, Without Strain Relief

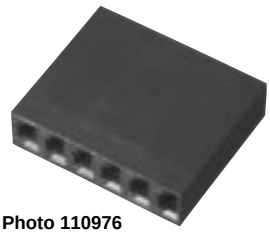

Photo 110976

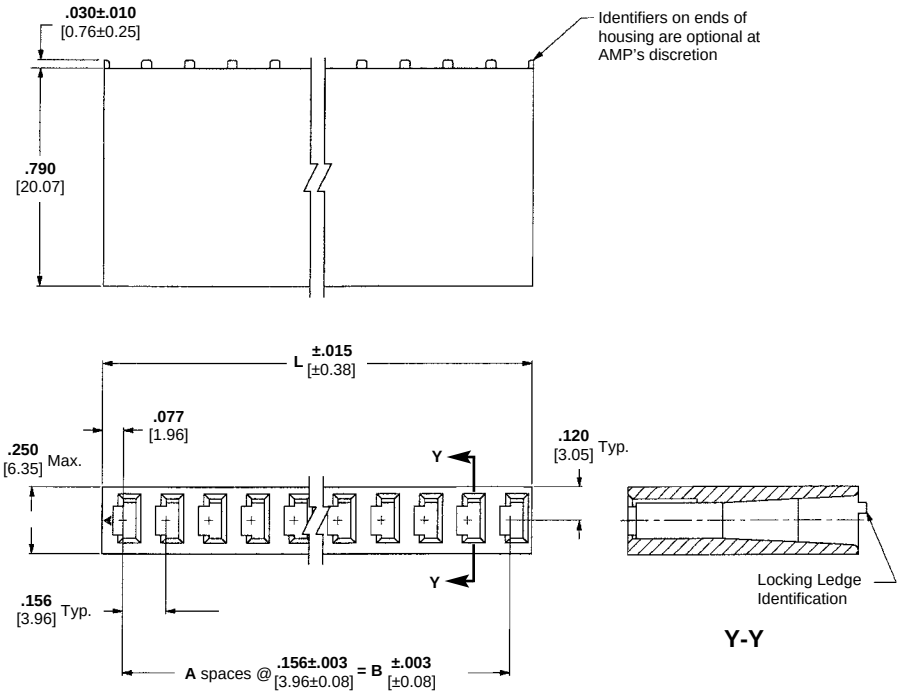

Material:

Black thermoplastic, flame retardant, 94V-0 rated

Related Product Data:

Contacts used with—page 2168
Mate with
Machine Applied Posts-page 2172
Headers—pages 2173, 2174
Performance Specifications—page 2178

Technical Documents: page 2178

No. of Positions	Dimensions			Housing Part Numbers
	A	B	L	Unstamped[1]
2	1	**.156** 3.96	**.312** 7.92	2-87025-5
3	2	**.312** 7.92	**.468** 11.89	2-87025-1
4	3	**.468** 11.89	**.624** 15.85	1-87025-3
12	11	**1.716** 43.59	**1.872** 47.55	1-87025-2

Notes: 1. No markings on housing.

Mod I Receptacle Housings, Standard Profile, Unkeyed, .031 x .062 [0.79 x 1.57] Centerline

Single Row, .156 [3.96] Centers, With Strain Relief

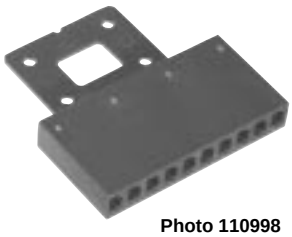

Photo 110998

Material:

Black thermoplastic, flame retardant, 94V-0 rated

Related Product Data:

Contacts used with—page 2168
Mate with
Machine Applied Posts—page 2172
Headers—pages 2173, 2174
Performance Specifications—page 2178

Technical Documents: page 2178

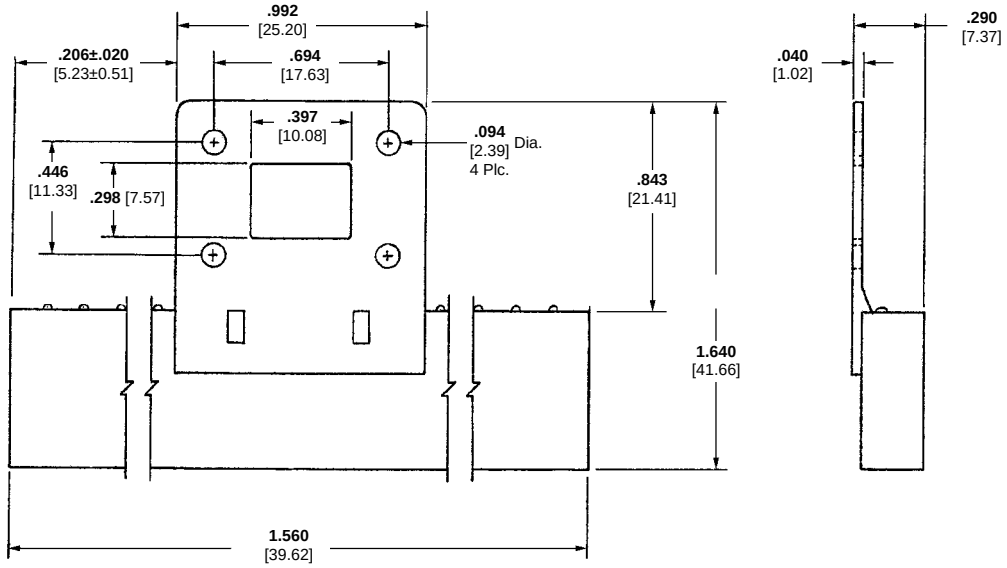

10 Position Receptacle Housing, Part Number 1-102090-0

For complete product information, order Catalog 1307819

Products for Industrial & Commercial Applications

Dimensions are shown for reference purposes only.

Dimensions are in inches and millimeters unless otherwise specified. Values in brackets are metric equivalents.

Specifications subject to change.

Technical Support Center
1-800-522-6752
www.tycoelectronics.com

Mod I Receptacle Housings, Low Profile, Keyed, .031 x .062 [0.79 x 1.57] Centerline

Single Row, .156 [3.96] Centers

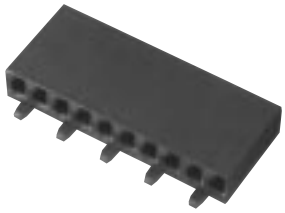

Photo 110974

Material:

Black thermoplastic, flame retardant, 94V-0 rated

Related Product Data:

Contacts used with—page 2168
Mate with
Headers—pages 2173, 2174
Performance Specifications—page 2178

Technical Documents: page 2178

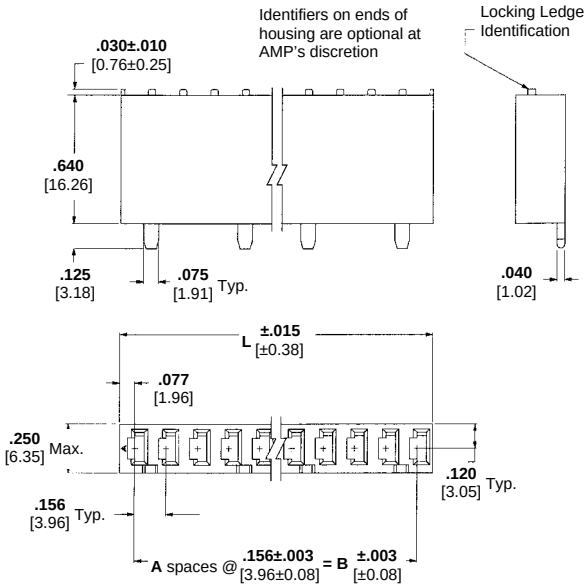

No. of Positions	Dimensions A	Dimensions B	Dimensions L	No. of Keys	Housing Part Numbers (Unstamped)[1]	Key Locations
2	1	**.156** 3.96	**.312** 7.92	1	87159-3	A
4	3	**.468** 11.89	**.624** 15.85	2	87159-5	A,C
5	4	**.624** 15.85	**.780** 19.81	2	87159-1	A,D
6	5	**.780** 19.81	**.936** 23.77	3	87159-6	A,C,E
8	7	**1.092** 27.74	**1.248** 31.70	4	87159-8	A,C,E,G
10	9	**1.404** 35.66	**1.560** 39.62	5	1-87159-0	A,C,E,G,J
12	11	**1.716** 43.59	**1.872** 47.55	6	1-87159-2	A,C,E,G,J,L

[1] No marking on housing.

Keying Plug

Material:

Natural Color Nylon

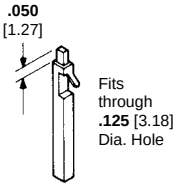

Part Number 87116-2

Keying Plug References

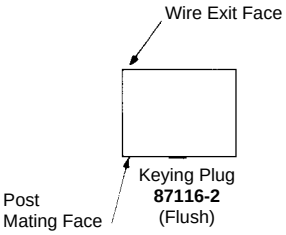

For Standard Housings

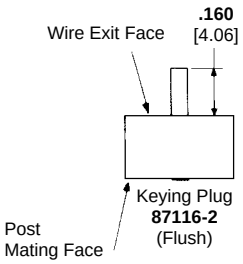

For Low Profile Housings

For complete product information, order Catalog 1307819

Products for Industrial & Commercial Applications

Dimensions are shown for reference purposes only.

Dimensions are in inches and millimeters unless otherwise specified. Values in brackets are metric equivalents.

Specifications subject to change.

Technical Support Center
1-800-522-6752
www.tycoelectronics.com

Mod I Posts, Machine Applied, .031 x .062 [0.79 x 1.57] Centerline

Straight Posts

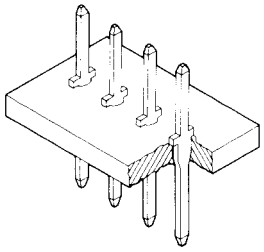

Typical Assembly

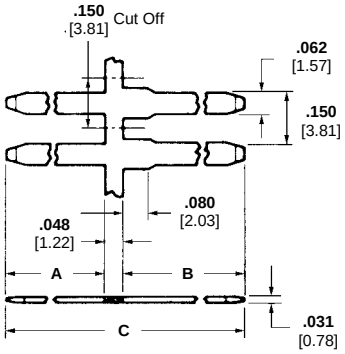

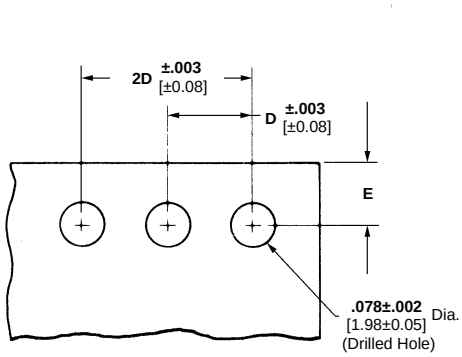

Recommended Mounting Holes

Material and Finish:

Brass, plated as follows:

Plating A—.000030 [0.00076] gold over .000050 [0.00127] nickel on entire post

Plating B—.0001000-.000200 [0.00254-0.00508] bright tin over .000050 [0.00127] nickel on entire post

Related Product Data:

Mate with Board Mount Receptacles—page 2165

Board Mount Receptacle Assemblies—pages 2166, 2167

Crimp Snap-In Receptacles and Housings—pages 2168-2170

Locking Clip Contacts & Housings—pages 2175, 2176 (see page 2175 for recommended post length).

Application Tooling—pages 2177

Performance Specifications—page 2178

Technical Documents: page 2178

D—Post centers may vary depending on requirements. Minimum nominal centerline spacing between adjacent contacts is .125 [3.18]; .003 [0.08] tolerances not to accumulate over length of board.

E—Post center location from edge of board may vary to satisfy application.

Dimensions						Finish	Part Nos.	
A		B		C			Strip Form[1]	Loose Piece[2]
.360	9.14	**.187**	4.75	**.595**	15.11	Plating A	86147-7	86182-7
.400	10.16	**.125**	3.18	**.573**	14.55	Plating B	3-86147-7	2-86182-5
.480	12.19	**.187**	4.75	**.715**	18.16	Plating A	—	1-86182-8
.565	14.35	**.187**	4.75	**.800**	20.32	Plating A	86147-8	86182-8
.670	17.02	**.125**	3.18	**.843**	21.41	Plating A	—	1-86182-1
.800	20.32	**.150**	3.81	**.998**	25.35	Plating B	1-86147-0	1-86182-0

[1] Packaging quantity of 20,000 per reel.
[2] Packaging quantity of 1,000 per bag.
Note: Strip form posts applied with Insertion Machine No. **3-457382-1**, includes power unit and applicator.

Mod I Headers, Straight Post, Keyed, .031 x .062 [0.79 x 1.57] Centerline

Single Row, .156 [3.96] Centers

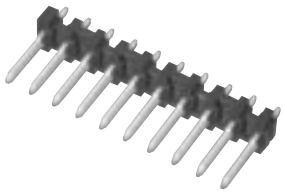

Photo 110972

Material and Finish:

Housing—Black thermoplastic, 94V-0 rated

Posts— Brass, plated as follows:

Plating A—Selectively plated .000030 [0.00076] gold on contact area, with gold flash over .000050 [0.00127] min. nickel on entire post

Plating B—.000100-.000200 [0.00254-0.00508] bright tin lead over .000030 [.000762] nickel on entire post

Related Product Data:

Mate with Board Mount Receptacles—page 2165

Board Mount Receptacle Assemblies—pages 2166, 2167

Crimp Snap-In Receptacles and Housings—pages 2171-2174

Locking Clip Contacts & Housings—pages 2175, 2176 (see page 2175 for recommended post length).

Performance Specifications—page 2178

Technical Documents: page 2178

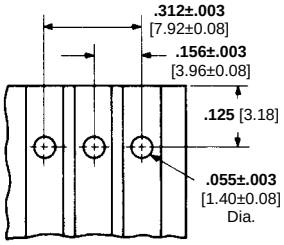

Recommended Board Layout

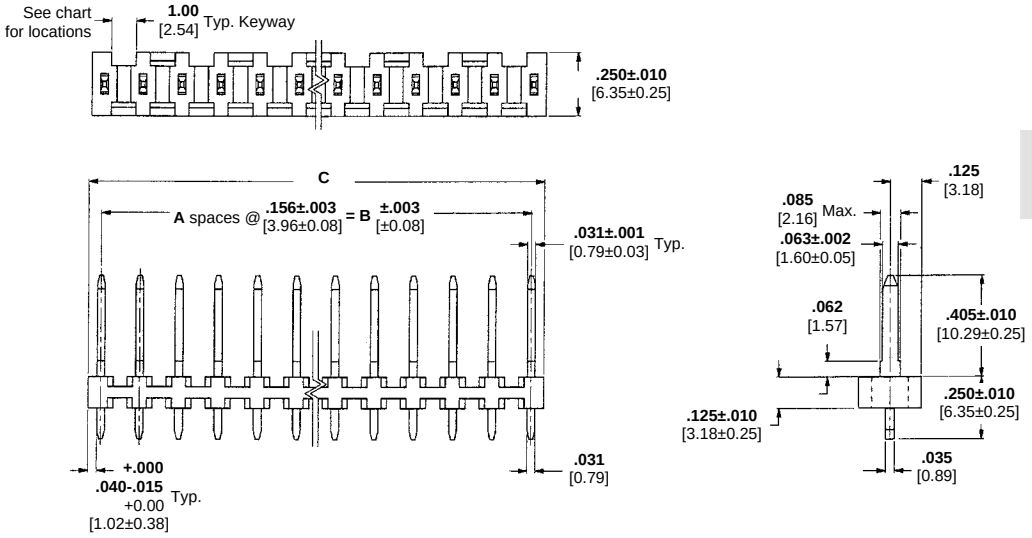



Keyway Locations
(Ref only)

No. of Positions	Dimensions A	Dimensions B	Dimensions C	No. of Keying Slots	Part Numbers Post Height D=.405 [10.29] Plating A	Part Numbers Post Height D=.405 [10.29] Plating B	Part Numbers Post Height D=.587 [14.91] Plating A	Keyway Locations
2	1	**.156** 3.96	**.267** 6.78	1	85829-2	87160-4	—	A
3	2	**.312** 7.92	**.423** 10.74	1	—	87160-5	—	A
4	3	**.468** 11.89	**.579** 14.71	2	85829-4	87160-6	87247-4	A,C
6	5	**.780** 19.81	**.891** 22.63	3	85829-6	87160-7	87247-6	A,C,E
8	7	**1.092** 27.74	**1.203** 30.56	4	—	87160-9	—	A,C,E,G
10	9	**1.404** 35.66	**1.515** 38.48	5	1-85829-0	1-87160-1	—	A,C,E,G,J
12	11	**1.716** 43.59	**1.827** 46.41	6	—	1-87160-3	—	A,C,E,G,J,L

For complete product information, order Catalog 1307819

Products for Industrial & Commercial Applications

Dimensions are shown for reference purposes only.

Dimensions are in inches and millimeters unless otherwise specified. Values in brackets are metric equivalents.

Specifications subject to change.

Technical Support Center
1-800-522-6752
www.tycoelectronics.com

Mod I Headers, Right-Angle Post, Keyed, .031 x .062 [0.79 x 1.57] Centerline

Single Row, .156 [3.96] Centers

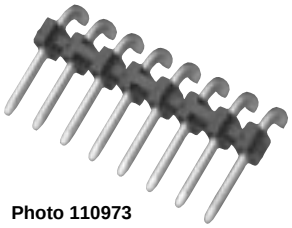

Photo 110973

Material and Finish:

Housing – Black thermoplastic, 94V-0 rated

Posts – Brass, plated as follows:

Plating B – .000015 [0.00038] gold over .000050 [0.00127] nickel on entire post

Related Product Data:

Mate with Board Mount Receptacles—page 2165

Board Mount Receptacle Assemblies—pages 2166, 2167

Crimp Snap-In Receptacles and Housings—pages 2171-2173

Locking Clip Contacts and Housings—pages 2175, 2176 (see page 2175 for recommended post length).

Performance Specifications—page 2178

Technical Documents: page 2178

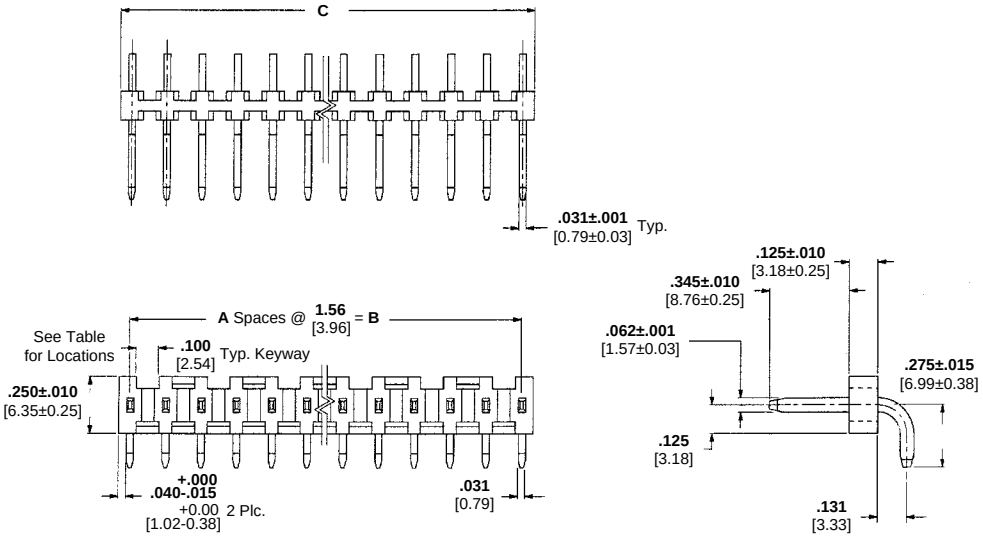



Keyway Locations (Ref Only)

No. of Positions	Dimensions A	Dimensions B	Dimensions C	No. of Keying Slots	Post Height Part Numbers D=.500 [12.70] Plating B	Keyway Locations
2	1	**.156** 3.96	**.267** 6.78	1	87258-2	A
4	3	**.468** 11.89	**.579** 14.71	2	87258-4	A,C
5	4	**.624** 15.85	**.735** 18.67	2	87258-5	A,D

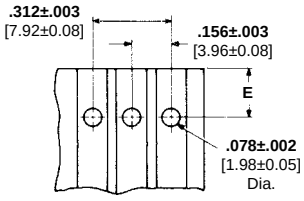

Recommended Board Layout

E Dimension

.345 [8.76] Post Height

.250 [6.35] for mounting header flush with board edge; .595 [15.11] for supporting mating connector on board.

.500 [12.70] Post Height

.250 [6.35] for mounting header flush with board edge; .750 [19.05] for supporting mating connector on board.

For complete product information, order Catalog 1307819

Products for Industrial & Commercial Applications

Dimensions are shown for reference purposes only.

Dimensions are in inches and millimeters unless otherwise specified. Values in brackets are metric equivalents.

Specifications subject to change.

Technical Support Center
1-800-522-6752
www.tycoelectronics.com

Locking Clip Contacts for .031 x .062 [0.79 x 1.57] Posts, .031 x .062 [0.79 x 1.57] Centerline

Wire Crimp Contacts with Insulation Support

Material and Finish:

Contact Body—Phosphor bronze, plated as follows:

Plating A—Selectively plated .000015 [0.00038] gold on contact area, with gold flash over .000050 [0.00127] nickel on entire post

Plating B—.000100 [0.00254] min. bright tin/lead over .000050 [0.00127] nickel on entire contact

Contact Spring—Stainless steel

Related Product Data:

Mate with Machine Applied Posts—page 2171

Headers (.500 Post Height Only)—pages 2173, 2174 (see recommended post length below)*

Housings used in—page 2176

Application Tooling—pages 2177

Performance Specification—page 2178

Technical Documents: page 2178

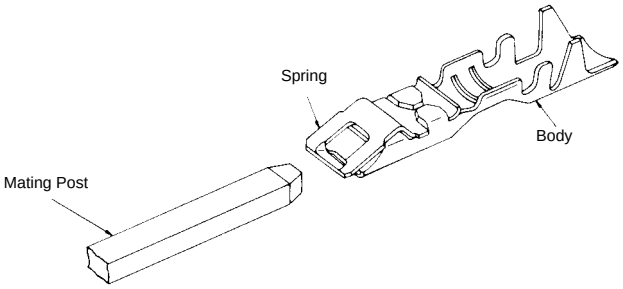

Wire Size Range AWG [mm²]	Ins. Dia. Range	Finish	Contact Part Numbers	
			Strip Form	Loose Piece
22-18 0.3-0.9	**.050-.0100** 1.27–2.54	Plating A	87269-2	87278-2
		Plating B	87269-1	87278-1

Wire Size Range AWG [mm²]	Applicator			Premium CERTI-CRIMP Hand Tool Part Number
	Part Number	Type	Used With Machine	
22-18 0.3-0.9	466007-2	HDM	Model "K" (AMP-O-LECTRIC)[1]	90308-1
	466950-2	SCA	Stripper/Crimper (AMP-O-MATIC)	

[1] AMP-O-LECTRIC KII Machine. Applicators also available for AMPOMATOR Lead Making Machines. Consult Tyco Electronics.

Note: These contacts must be crimped in accordance with AMP Specification No. 114-25008 in order to function properly in a connector housing.

Extraction Tool **Part Number 91104-1** is used for removing individual contacts from connector housings and for detaching contacts from mating posts.



Photo 110999

Extraction Tool Part Number
91104-1

Instruction Sheet 408-7678

Wire Harnessing

If necessary, wires can be grouped with cable ties and secured to a panel with fixed clamps. However, locking clip contacts must be free to float within the connector housings to allow proper extraction. Therefore, harnessing hardware or the use of multiple terminations per contact must not restrict the free-floating action of contacts in the housing. For more information, request Insulating and Bundling Products Catalog 124132.

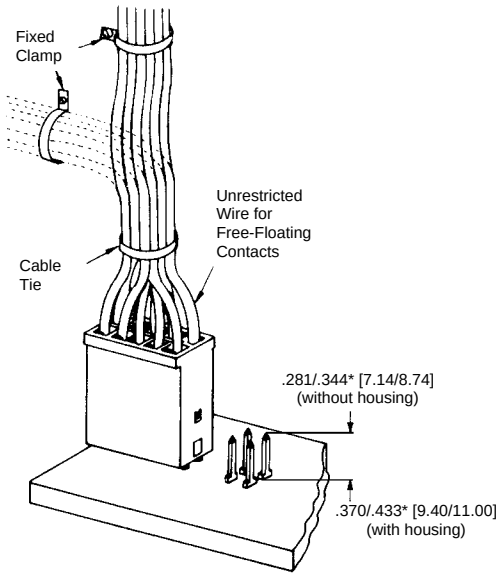

For complete product information, order Catalog 1307819

Products for Industrial & Commercial Applications

Dimensions are shown for reference purposes only.

Dimensions are in inches and millimeters unless otherwise specified. Values in brackets are metric equivalents.

Specifications subject to change.

Technical Support Center
1-800-522-6752
www.tycoelectronics.com

Locking Clip Connector Housings, .031 x .062 [0.79 x 1.57] Centerline

Single Row, .156 [3.96] Centers

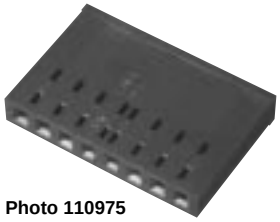

Photo 110975

Material and Finish:

Black thermoplastic, 94V-0 rated

Related Product Data:

Contacts used with—page 2175
Mate with Machine Applied Posts—page 2172
Headers—pages 2173, 2174 (see page 2175 for recommended post length)
Performance Specifications—page 2178

Technical Documents: page 2178

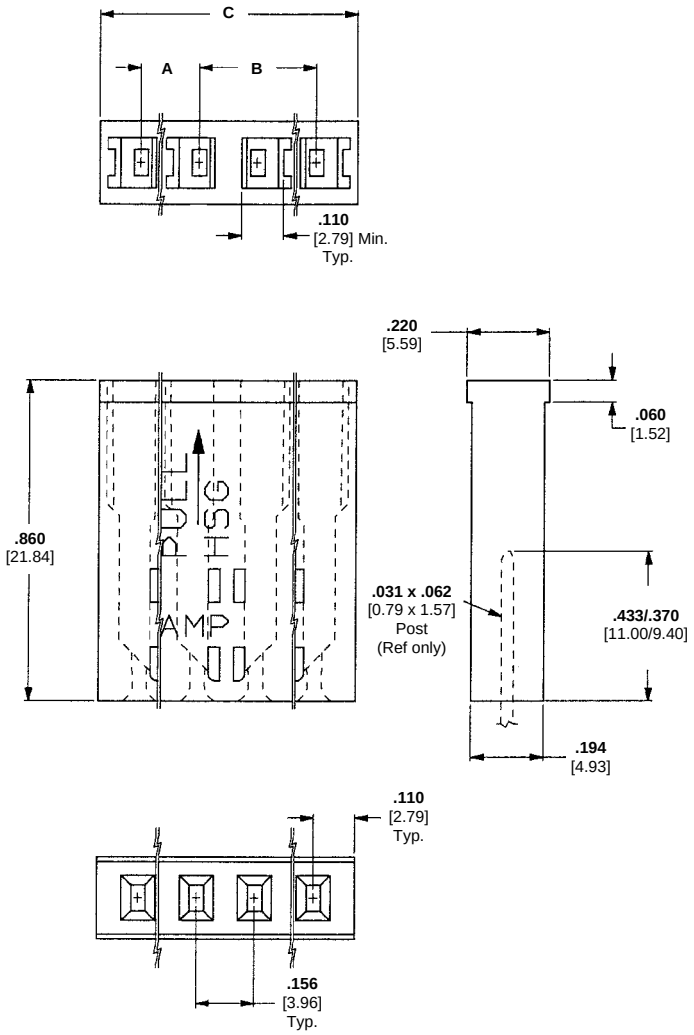

No. of Positions	Dimensions A	Dimensions B	Dimensions C	Housing Part Nos. UnKeyed
1	—	—	**.200** 5.08	87270-1
2	—	—	**.376** 9.55	87270-2
3	**.156** 3.96	**.156** 3.96	**.532** 13.51	1-87270-3
4	**.156** 3.96	**.312** 7.92	**.688** 17.48	87270-4
5	**.312** 7.92	**.312** 7.92	**.844** 21.44	1-87270-4

Notes: 1. All housings listed above will accept Locking Clip Contacts No. 87269 and 87278, refer to page 2175
2. Refer to AMP Instruction Sheet 408-7676 for proper contact orientation within the housings.

For complete product information, order Catalog 1307819

Products for Industrial & Commercial Applications
Dimensions are shown for reference purposes only.
Dimensions are in inches and millimeters unless otherwise specified. Values in brackets are metric equivalents.
Specifications subject to change.
Technical Support Center
1-800-522-6752
www.tycoelectronics.com

Application Tooling for Crimp Snap-In Receptacle Contacts and Locking Clip Contacts

Hand Tools

PRO-CRIMPER II Hand Tool — **Part Number** 354940-1
See Page 13003

CERTI-CRIMP Straight Action Hand Tool — (SAHT)
See Page 13012

Semi-automatic Bench Tooling

AMP-O-LECTRIC Model "G" Terminating Machines — **Part Number** 354500-1, -9, -11
See Page 13005

AMP-O-MATIC Stripper-Crimper Machines — **Part Number** 854040-3, -4
See Page 13011

Crimp Quality Monitor (CQM) — **Part Number** 1320420-1, -2
See Page 13027

Automatic Tooling

AMP-O-MATOR CLS IV+ Lead-Making Machines — **Part Number** 356500-1, -2, 1213400-1, -2
See Page 13005

Crimp Quality Monitor (CQM) — **Part Number** 1320420-1, -2
See Page 13027

Application Tooling for Board Mount Receptacles and Machine Applied Posts

Semi-automatic Bench Tooling

Modular Insertion System (MIS) Machines — **Part Number** 217600 Series, 662820 Series
See Page 13022

Semi-automatic Bench Tooling

Comp-U-Sertor II Machines — **Part Number** 122300-1, -2
See Page 13021

P300 Automatic Insertion Machine
See Page 13021

Performance Specifications

The electrical, mechanical and environmental characteristics of the AMPMODU .031 x .062 [0.79 x 1.57] Interconnection System are listed below:

Mechanical Characteristics

Contact Durability:

Plating	Receptacles		Locking Clip Contacts
	Standard Pressure	High Pressure	
.000016 [0.00041] Min. Tin	75 Cycles	25 Cycles	N/A
.000079 [0.00201] Min. Tin	75 Cycles	25 Cycles	N/A
.000100 [0.00254] Min. Bright Tin/Lead	N/A	N/A	25 Cycles
.000015 [0.00038] Gold	75 Cycles	50 Cycles	25 Cycles
.000030 [0.00076] Gold	200 Cycles	100 Cycles	N/A

Electrical Characteristics:

Contact Current Rating — 5 amperes max. for single contact in free air, could vary due to ambient temperature, wire size and duty cycles.

Contact Resistance — 12 milliohms at 100 ma and 50 mv open circuit.

Dielectric Rating — At Sea Level – 1200 VAC between contacts on .156 [3.96] centers for 1 minute.

Insulation Resistance — 5×10^3 megohms (initial)

Connector Durability

Receptacles

Mating – 16 oz. [4.45N] max. per contact after 3 mating cycles (standard pressure)

–30 oz. [8.34N] max. per contact after 3 mating cycles (high pressure, gold)

–60 oz. [16.68N] max. per contact after 3 mating cycles (high pressure, tin)

Unmating – 1 oz. [0.28N] min. per contact after 3 mating cycles (standard pressure)

3 oz. [0.83N] min. per contact after 3 mating cycles (high pressure)

Locking Clip Contacts

Mating – 4 lb. [17.79N] max. per contact after 3 mating cycles

Unmating – 2 lb. [8.90N] min. per contact after 3 mating cycles

Environmental Characteristics

Operating Temperature: -65°C to 105°C [-85°F to 221°F] (Gold Plated)
-65°C to 60°C [-85°F to 140°F] (Tin Plated)

Technical Documents

Various technical documents are available for your use:

Product Specifications describe technical performance characteristics and verification tests. They are intended for the Design, Component and Quality Engineer.

108-25016 Interconnection System, Standard Pressure

108-25025 Interconnection System, High Pressure, Gold

108-25025-1 Interconnection System, High Pressure, Tin

108-36029 Locking Clip Connectors

Application Specifications describe requirements for using the product in its intended application and/or crimping information. They are intended for the Packaging and Design Engineer and the Machine Setup Person.

114-25000 Crimp Snap-In Receptacle Contacts

114-25004 Board Mount Receptacle Contacts

114-25008 Locking Clip Contacts

114-25011 Machine Applied Straight Posts

Instruction Sheets provide instructions for assembling or applying the product. They are intended for the Manufacturing Assembler or Operator.

408-7308 Clinching Procedures for Header Assemblies

408-7411 Suggestions for Wave Soldering AMPMODU Receptacles

408-7594 AMP Hand Tool 90274-2 for Crimping Crimp Snap-In 18-22 AWG Contacts

408-7750 AMP Hand Tool 90328-1 for Crimping Crimp Snap-In Contacts (22-26 AWG)

408-7676 AMPMODU Locking Clip Connectors and Contacts

408-7671 AMP Hand Tool 90308-1 for Crimping Locking Clip Contacts

408-7678 AMP Extraction Tool 91104-1 for Locking Clip Contacts

408-7981 Clinching Procedures for Receptacle Assemblies

408-9451 AMP Extraction Tool 843473-1 for Crimp Snap-In Receptacles

For complete product information, order Catalog 1307819

Product Facts

- **Press fit design — eliminates hand soldering**
- **Unitized PC104 connector assembly — eliminates two piece (64 pin & 40 pin) configuration**
- **Integral board spacers with captive hardware — eases & improves assembly efficiency while minimizing stocked hardware**
- **"Flat-rock" insertable — no need for complex insertion tooling**
- **UL Recognition and CSA Certification Pending**
- **Fully compliant with PC104 & PC104-*Plus* standards**

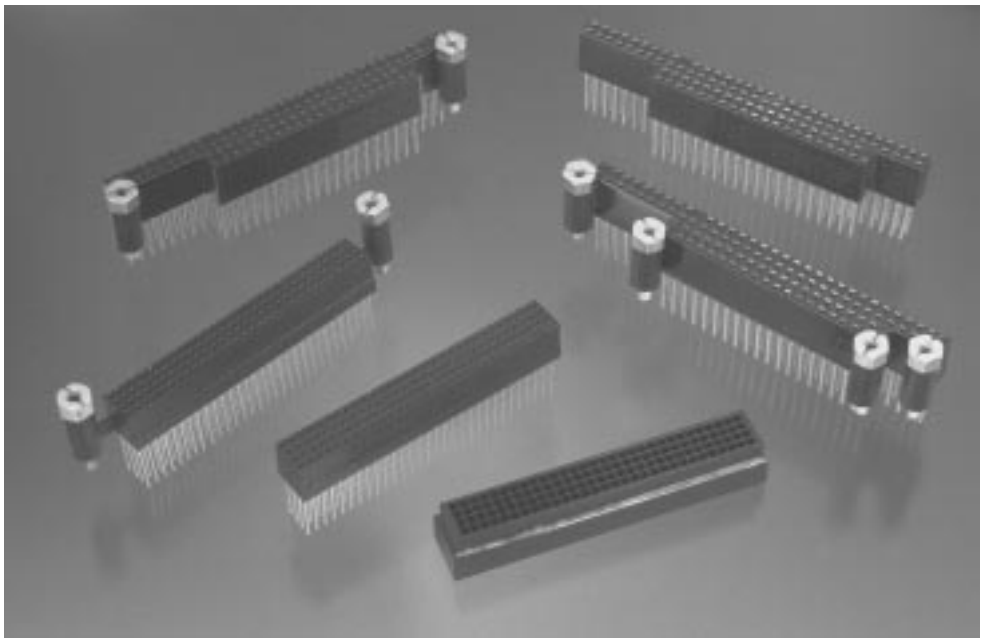

The PC/104 and PC/104-*Plus* connectors are industry standard product offerings which comply with the interconnection requirements defined by the PC/104 organization (http://www.pc104.org)

Both products are designed specifically for "flat-rock" press-fit installation for ease of application. Solder version is also available.

Optional integral standoffs minimize the customer's system assembly time.

The AMP offering of the standard PC/104 product is a unitized connector rather than the two piece, 40 and 64 position connectors currently on the market. Customer needs to stock and apply only one part number rather than two.

Performance Specifications

Electrical Characteristics

Meets requirements of PC/104 and PC/104-*Plus* standards

Nominal Resistance — 10 milliohms maximum, Δ R

Insulation Resistance — 1000 megohms minimum

Dielectric Withstanding Voltage — 500 VAC for 1 min. at sea level

Mechanical Characteristics

Meets requirements of PC/104 and PC/104-*Plus* standards

Current — Signal application only

Temperature — –55° to 105°C

Material and Finish

Housing — Black Thermoplastic, UL 94V-0

Contact — Phosphor Bronze, Full Gold all over Nickel (stackthrough), Gold on mating end, Tin-Lead on PCB tail all over Nickel (non-stackthrough)

Need more information?

Call the Technical Support Center: 1-800-522-6752

The Technical Support Center is staffed with specialists well versed in Tyco Electronics products. The Center can provide you with:

- Technical Support
- Catalogs
- Technical Documents
- Product Samples
- Tyco Electronics Authorized Distributor Locations

Technical Documents:

Product Specifications
108-1956

Application Specifications
114-13021

Connector	Centerline	Position
PC/104	**.100** 2.54	104*
PC/104 *Plus*	**.079** 2.0	120

*Two circuits plugged per PC/104 specification.

For complete product information, order Catalog 1308564

Products for Industrial & Commercial Applications

Dimensions are shown for reference purposes only.

Dimensions are in inches and millimeters unless otherwise specified. Values in brackets are metric equivalents.

Specifications subject to change.

Technical Support Center
1-800-522-6752
www.tycoelectronics.com

PC/104, Press-Fit

Material and Finish

Housing — High Temperature, Glass filled Nylon, Black

Contacts — Phosphor Bronze, 0.000381 [.000015] min. Gold on mating receptacle end, 0.000130 [.000005] min. Gold on remainder, all over 0.001270 [.00005] Nickel (stackthrough), 0.000381 [.000015] min.
Gold on mating receptacle end, 0.00254 [.0001] bright Tin-lead on remainder, all over 0.001270 [.00005] Nickel (non-stackthrough)

Screwlocks — Steel, Clear Chromate over Zinc

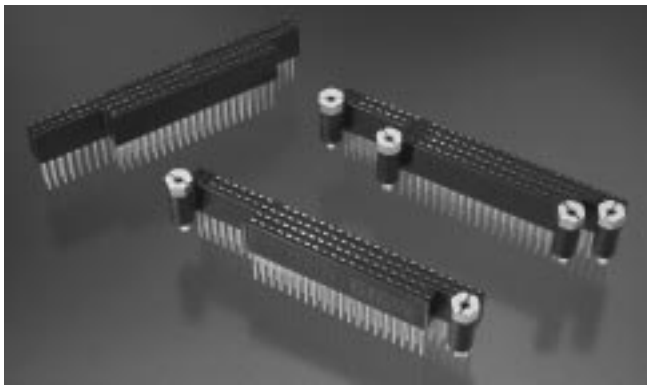

Part Number 1375795-1 (Keyed)
Stackthrough, No Standoffs
Part Number 1375795-2 (Non-Keyed)

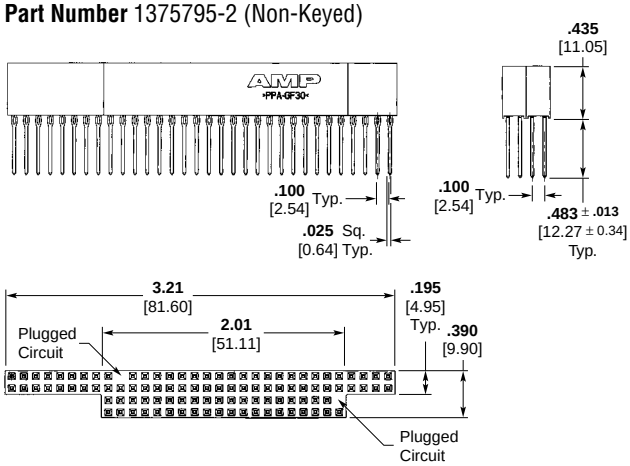

Part Number 1375796-1 (Keyed)
Non-Stackthrough, No Standoffs
Part Number 1375796-2 (Non-Keyed)

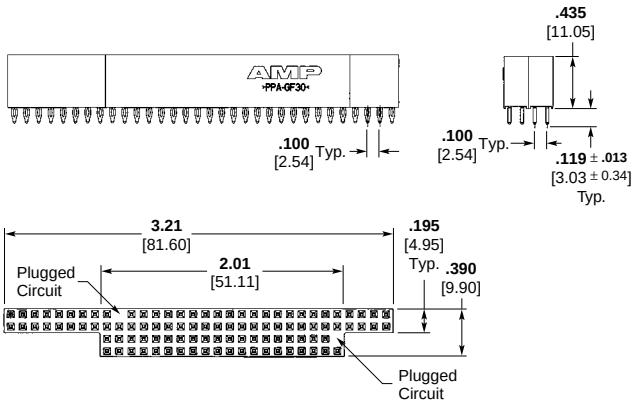

Part Number 1375793-1 (Keyed)
Stackthrough, 2 Standoffs
Part Number 1375793-2 (Non-Keyed)

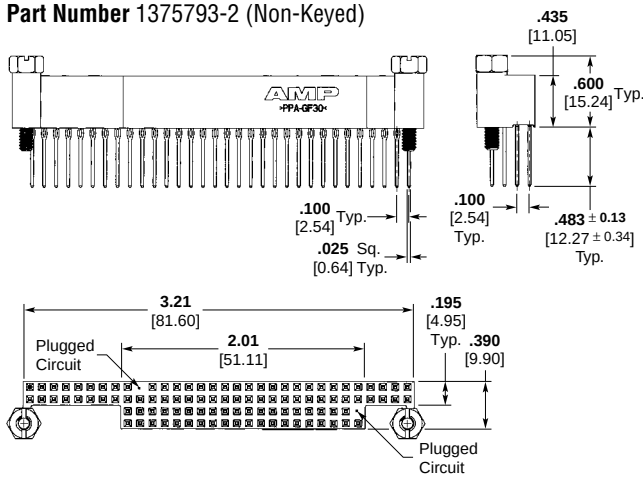

Part Number 1375794-1 (Keyed)
Non-Stackthrough, 2 Standoffs
Part Number 1375794-2 (Non-Keyed)

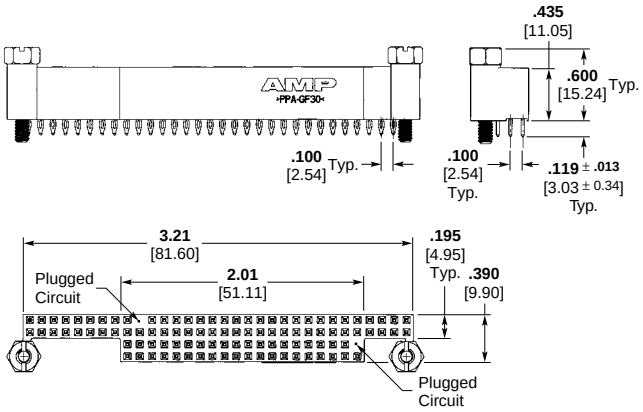

For complete product information, order Catalog 1308564

Products for Industrial & Commercial Applications
Dimensions are shown for reference purposes only.
Dimensions are in inches and millimeters unless otherwise specified. Values in brackets are metric equivalents.
Specifications subject to change.
Technical Support Center
1-800-522-6752
www.tycoelectronics.com

PC/104, Press-Fit

Part Number 1375791-1 (Keyed)
Stackthrough, 4 Standoffs
Part Number 1375791-2 (Non-Keyed)

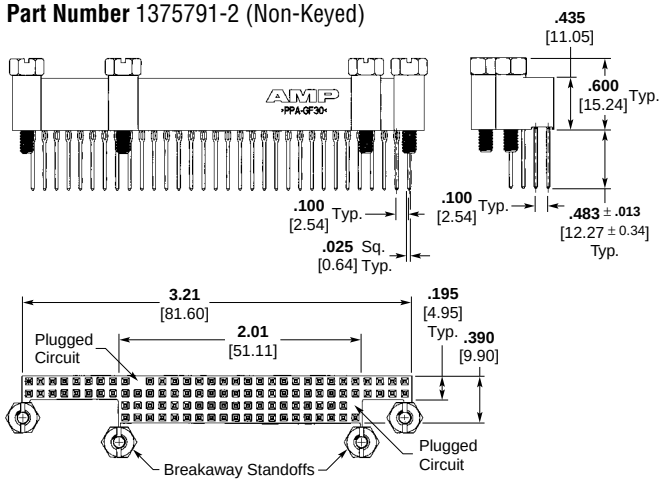

Part Number 1375792-1 (Keyed)
Non-Stackthrough, 4 Standoffs
Part Number 1375792-2 (Non-Keyed)

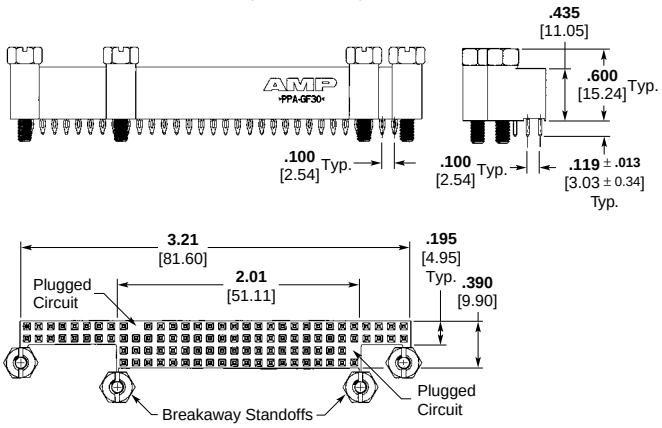

PC/104-*Plus*, Press-Fit

Material and Finish

Housing — High Temperature, Glass filled Nylon, Black

Contacts — Phosphor Bronze, 0.000381 [.000015] min. Gold on mating receptacle end, 0.000130 [.000005] min. Gold on remainder, all over 0.001270 [.00005] Nickel (stackthrough), 0.000381 [.000015] min.
Gold on mating receptacle end, 0.00254 [.0001] bright Tin-lead on remainder, all over 0.001270 [.00005] Nickel (non-stackthrough)

Screwlocks — Steel, Clear Chromate over Zinc

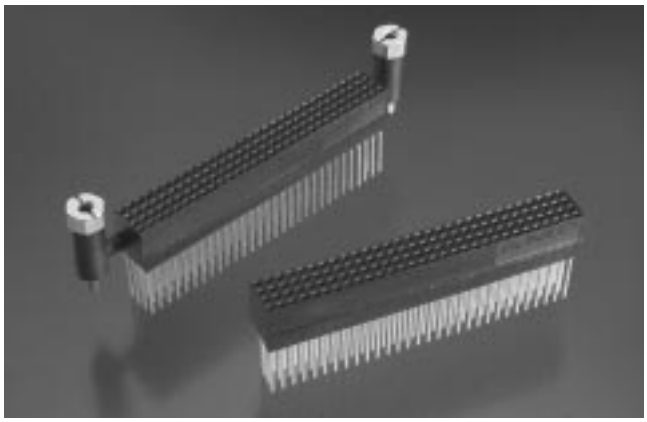

Part Number 1375799-1 (Keyed)
Stackthrough, No Standoffs
Part Number 1375799-2 (Non-Keyed)

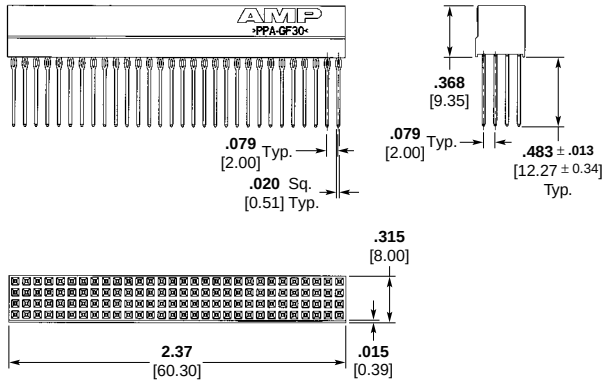

Part Number 1375800-1 (Keyed)
Non-Stackthrough, No Standoffs
Part Number 1375800-2 (Non-Keyed)

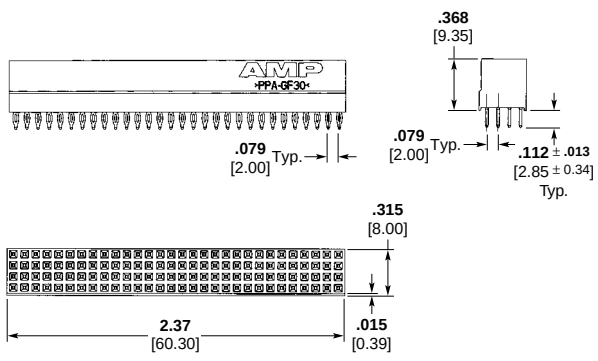

For complete product information, order Catalog 1308564

PC/104-*Plus*, Press-Fit

Part Number 1375798-1 (Keyed)
Non-Stackthrough, 2 Standoffs
Part Number 1375798-2 (Non-Keyed)

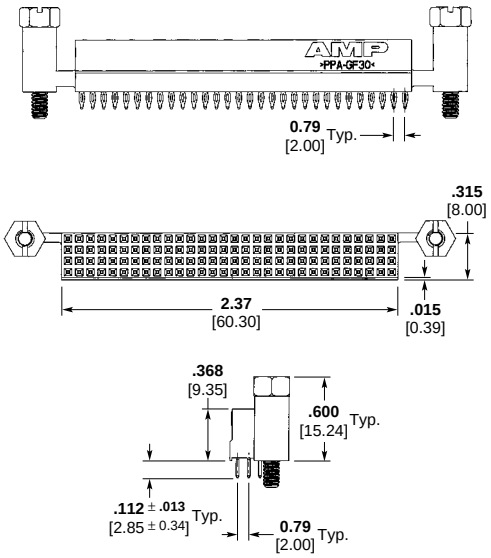

Part Number 1375797-1 (Keyed)
Stackthrough, 2 Standoffs
Part Number 1375797-2 (Non-Keyed)

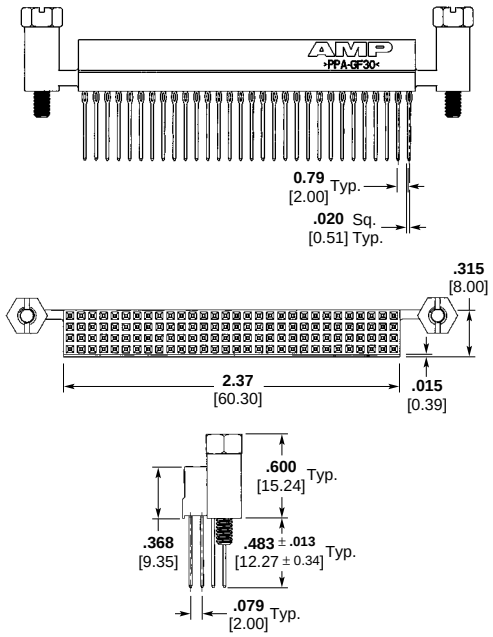

PC/104, Solder

Material and Finish

Housing — High Temperature, Glass filled Nylon, Black

Contacts — Phosphor Bronze, 0.000381 [.000015] min. Gold on mating receptacle end, 0.000130 [.000005] min. Gold on remainder, all over 0.001270 [.00005] Nickel (stackthrough), 0.000381 [.000015] min.
Gold on mating receptacle end, 0.00254 [.0001] bright Tin-lead on remainder, all over 0.001270 [.00005] Nickel (non-stackthrough)

Screwlocks — Steel, Clear Chromate over Zinc

Part Number 1375963-1 (Keyed)
Non-Stackthrough, No Standoffs
Part Number 1375963-2 (Non-Keyed)

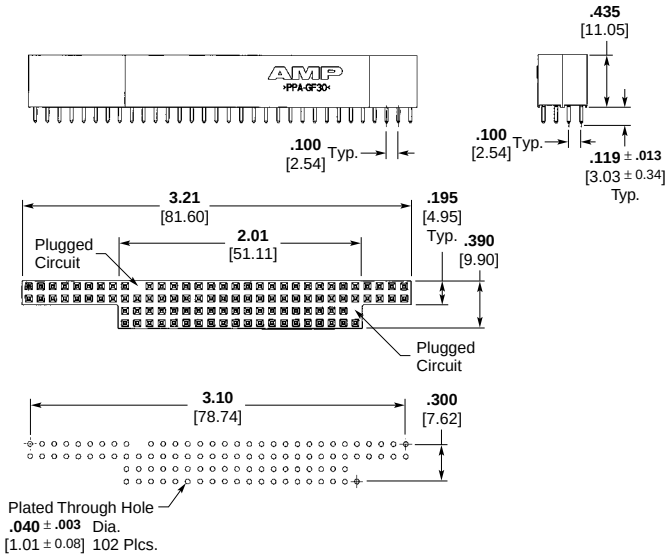

Recommended PC Board Layout

For complete product information, order Catalog 1308564

Products for Industrial & Commercial Applications
Dimensions are shown for reference purposes only.
Dimensions are in inches and millimeters unless otherwise specified. Values in brackets are metric equivalents.
Specifications subject to change.
Technical Support Center
1-800-522-6752
www.tycoelectronics.com

PC/104, Solder

Part Number 1375961-1 (Keyed)
Non-Stackthrough, 2 Standoffs
Part Number 1375962-2 (Non-Keyed)

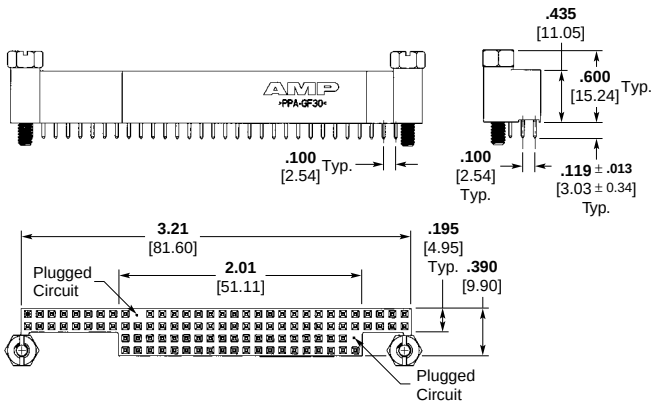

Part Number 1375959-1 (Keyed)
Non-Stackthrough, 4 Standoffs
Part Number 1375959-2 (Non-Keyed)

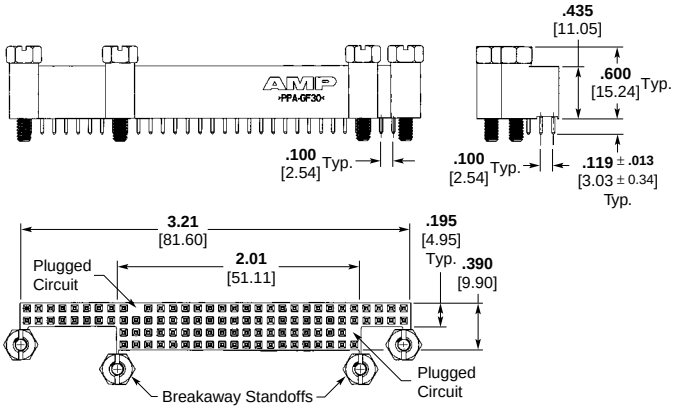

PC/104-*Plus*, Solder

Material and Finish

Housing — High Temperature, Glass filled Nylon, Black

Contacts — Phosphor Bronze, 0.000381 [.000015] min. Gold on mating receptacle end, 0.000130 [.000005] min. Gold on remainder, all over 0.001270 [.00005] Nickel (stackthrough), 0.000381 [.000015] min.
Gold on mating receptacle end, 0.00254 [.0001] bright Tin-lead on remainder, all over 0.001270 [.00005] Nickel (non-stackthrough)

Screwlocks — Steel, Clear Chromate over Zinc

Part Number 1375967-1 (Keyed)
Non-Stackthrough, No Standoffs
Part Number 1375967-2 (Non-Keyed)

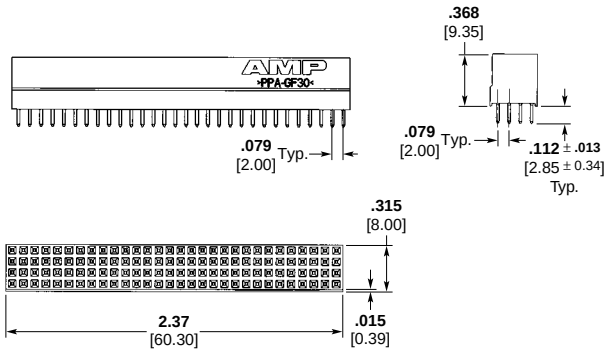

Part Number 1375965-1 (Keyed)
Non-Stackthrough, 2 Standoffs
Part Number 1375965-2 (Non-Keyed)

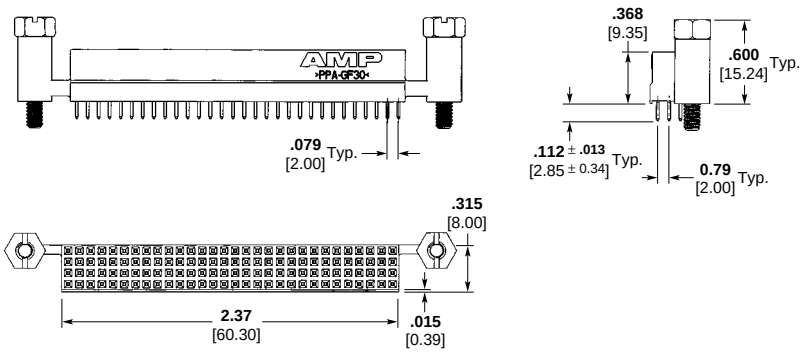

For complete product information, order Catalog 1308564

Products for Industrial & Commercial Applications
Dimensions are shown for reference purposes only.
Dimensions are in inches and millimeters unless otherwise specified. Values in brackets are metric equivalents.
Specifications subject to change.
Technical Support Center
1-800-522-6752
www.tycoelectronics.com

Accessories

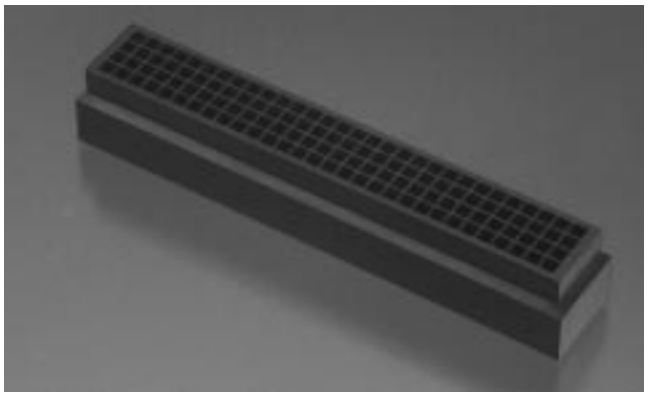

Part Number 1375801-1
Shroud, PC/104-*Plus*

Material and Finish
Housing — PBT, Black

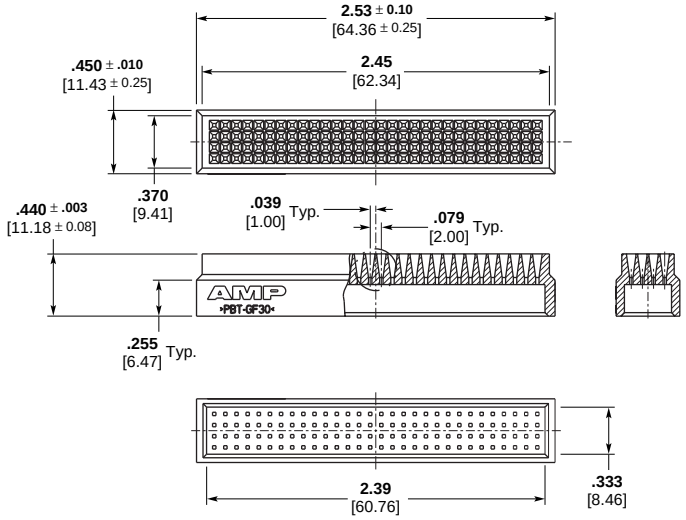

Recommended PC Board Layout

Part Number 1445005-1
Standoff

Material and Finish
Steel, Clear Chromate over Zinc

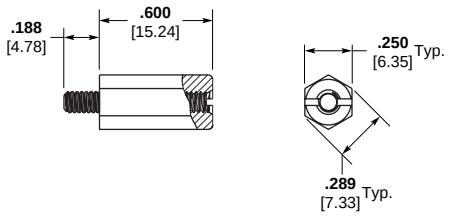

Part Number 1445251-1
Organizer, PC/104

For complete product information, order Catalog 1308564

Products for Industrial & Commercial Applications
Dimensions are shown for reference purposes only.
Dimensions are in inches and millimeters unless otherwise specified. Values in brackets are metric equivalents.
Specifications subject to change.
Technical Support Center
1-800-522-6752
www.tycoelectronics.com

Product Facts

- **Connectors and headers for 2 through 28 positions; wire sizes of 22, 24, 26 and 28 AWG [0.4-0.08] mm²**
- **Wire-to-Post Connectors preloaded with dual beam contacts**
- **Connectors and headers, except shrouded headers, are end-to-end stackable**
- **Connector styles include both closed end and feed-thru connectors with locking ramps, with and without polarizing tabs**
- **Polarizing tabs do not allow reverse mating**
- **Posted connectors for 2 through 19 positions**
- **Connectors preloaded with IDC contact**
- **All contacts are slotted for insulation displacement (IDC) terminal technique**
- **Contacts are lubricated to prevent fretting corrosion**
- **Benefits derived from the MTA-100 system include increased quality and ease of handling such as —**
  - **One-step assembly**
  - **No wire stripping**
  - **No contact damage**
  - **Reduced wiring errors**
  - **Simpler tooling**
  - **Simple maintenance and repair**
- **Meets the material requirements of Table 23.1 of UL1410 Standards for Television Receiver and Video Products (wire-to-post connectors only)**
- **Recognized under the Component Program of Underwriters Laboratories Inc., File No. E28476**
- **Certified by Canadian Standards Association File No. LR7189**

Technical Documents:

Product Specification
108-1050 MTA-100 Connectors

Application Specifications
114-1019 MTA-100 Connectors
114-1031 MTA-100 Ribbon Cable Assembly

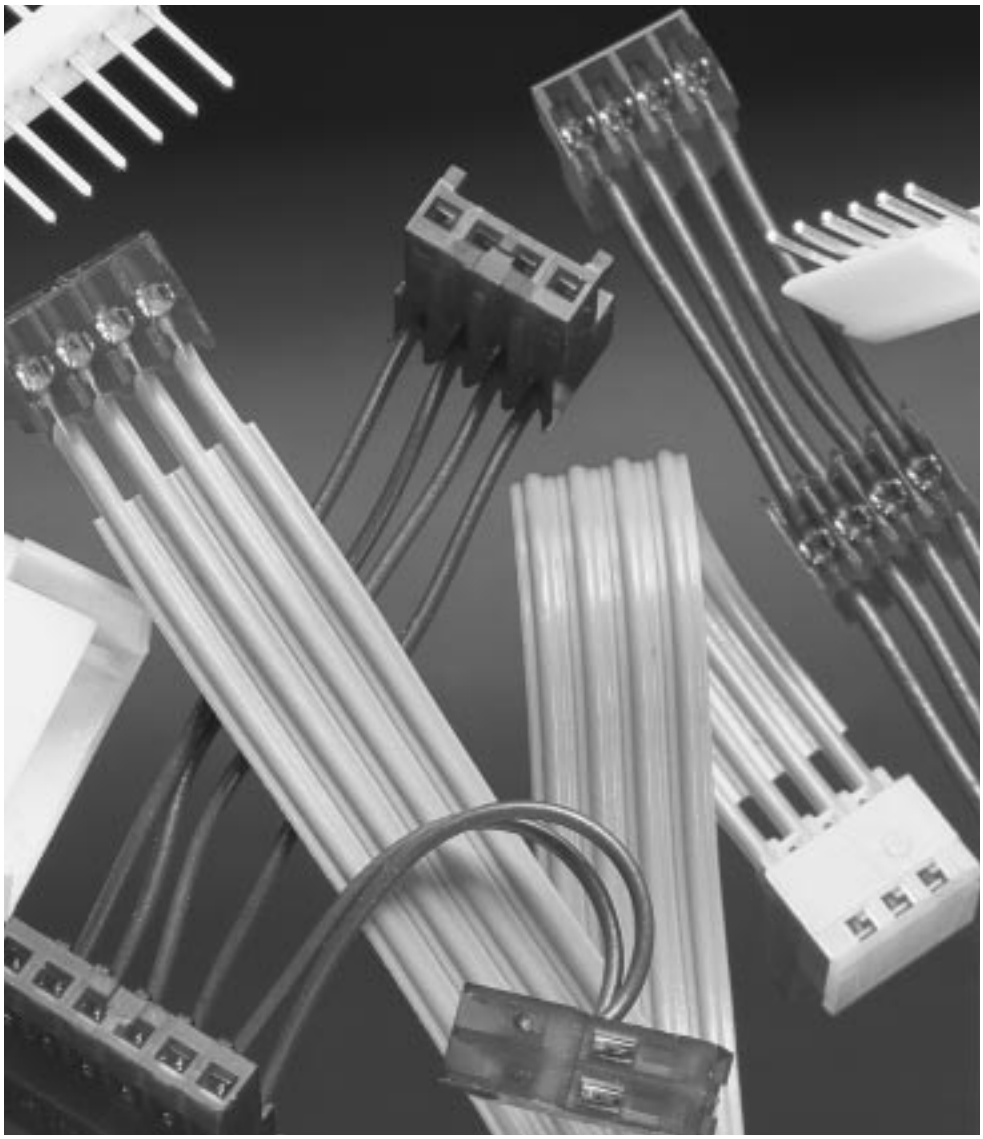

MTA-100 connectors accept discrete and ribbon cable wire sizes ranging from 22–28 AWG [0.4–0.08 mm²] with maximum insulation outside diameter of .060 [1.52] for terminating single wire and .050 [1.27] for mass termination of wires. Tin plated solid, fused stranded, or stranded (7 strands) wire with PVC insulation can be used on 22–28 AWG [0.4–0.09 mm²] MTA-100 connectors and 19 stranded wire on 22–24 AWG [0.4–0.2 mm²] MTA-100 connectors. Only one wire to be terminated into an IDC contact slot.

The wire-to-post connector housing material is flame retardant thermoplastic, either UL94V-2 or UL94V-0 rated.

A full line of .100 [2.54] centerline headers completes the system. Headers are available with straight or right-angle posts, in flat, polarized or friction lock styles. Headers are available in 2 through 28 positions. Shrouded headers are available in 2 through 14 positions.

For complete product information, order Catalog 82056

Performance Data*:

Voltage Rating — 250 vac

Current Rating — 5 amp max.

Low-Level Resistance — 6 mΩ max. initial

Dielectric Withstanding Voltage — 750 vac/1 min.

Insulation Resistance — 5000 MΩ min. initial

Operating Temperature — −55° C to +105° C

Note: Refer to page 2219 for approved wire listings.

*Refer to the Product Specification for additional electrical, mechanical and environmental performance tests and requirements.

Matrix for Tin Plated Part Numbers

This matrix has been prepared to assist you, our customer, in defining the correct mating halves for the MTA-100 header and connector combination. Where a “Y” is indicated the combination is a valid mating pair. Where an “N” is indicated the combination is not acceptable for mating.

Headers

Connectors	640452	640453	640454	640455	640456	640457	644456	644457	644486	644488	644694	644695	644803	644861	644874	644875	644876	644877	644892	644893	644894	647047	647048	647050	647051	647106	647166
640440	Y	Y	Y	Y	Y	Y	Y	Y	Y	Y	Y	Y	Y	Y	Y	Y	Y	N	N	N	Y	Y	Y	Y	Y	Y	Y
640441	Y	Y	Y	Y	Y	Y	Y	Y	Y	Y	Y	Y	Y	Y	Y	Y	Y	N	N	N	Y	Y	Y	Y	Y	Y	Y
640442	Y	Y	Y	Y	Y	Y	Y	Y	Y	Y	Y	Y	Y	Y	Y	Y	Y	N	N	N	Y	Y	Y	Y	Y	Y	Y
640443	Y	Y	Y	Y	Y	Y	Y	Y	Y	Y	Y	Y	Y	Y	Y	Y	Y	N	N	N	Y	Y	Y	Y	Y	Y	Y
640468	Y	Y	Y	Y	Y	Y	Y	Y	Y	Y	Y	Y	Y	Y	Y	Y	Y	N	N	N	Y	Y	Y	Y	Y	Y	Y
640469	Y	Y	Y	Y	Y	Y	Y	Y	Y	Y	Y	Y	Y	Y	Y	Y	Y	N	N	N	Y	Y	Y	Y	Y	Y	Y
640470	Y	Y	Y	Y	Y	Y	Y	Y	Y	Y	Y	Y	Y	Y	Y	Y	Y	N	N	N	Y	Y	Y	Y	Y	Y	Y
640471	Y	Y	Y	Y	Y	Y	Y	Y	Y	Y	Y	Y	Y	Y	Y	Y	Y	N	N	N	Y	Y	Y	Y	Y	Y	Y
640620	Y	Y	Y	Y	Y	Y	Y	Y	Y	Y	Y	Y	Y	Y	Y	Y	Y	N	N	N	Y	Y	Y	Y	Y	Y	Y
640621	Y	Y	Y	Y	Y	Y	Y	Y	Y	Y	Y	Y	Y	Y	Y	Y	Y	N	N	N	Y	Y	Y	Y	Y	Y	Y
640622	Y	Y	Y	Y	Y	Y	Y	Y	Y	Y	Y	Y	Y	Y	Y	Y	Y	N	N	N	Y	Y	Y	Y	Y	Y	Y
640623	Y	Y	Y	Y	Y	Y	Y	Y	Y	Y	Y	Y	Y	Y	Y	Y	Y	N	N	N	Y	Y	Y	Y	Y	Y	Y
641311	Y	Y	Y	Y	Y	Y	Y	Y	Y	Y	Y	Y	Y	Y	Y	Y	Y	N	N	N	Y	Y	Y	Y	Y	Y	Y
641312	Y	Y	Y	Y	Y	Y	Y	Y	Y	Y	Y	Y	Y	Y	Y	Y	Y	N	N	N	Y	Y	Y	Y	Y	Y	Y
641313	Y	Y	Y	Y	Y	Y	Y	Y	Y	Y	Y	Y	Y	Y	Y	Y	Y	N	N	N	Y	Y	Y	Y	Y	Y	Y
641314	Y	Y	Y	Y	Y	Y	Y	Y	Y	Y	Y	Y	Y	Y	Y	Y	Y	N	N	N	Y	Y	Y	Y	Y	Y	Y
641534	Y	Y	Y	Y	Y	Y	Y	Y	Y	Y	Y	Y	Y	Y	Y	Y	Y	N	N	N	Y	Y	Y	Y	Y	Y	Y
641535	Y	Y	Y	Y	Y	Y	Y	Y	Y	Y	Y	Y	Y	Y	Y	Y	Y	N	N	N	Y	Y	Y	Y	Y	Y	Y
641536	Y	Y	Y	Y	Y	Y	Y	Y	Y	Y	Y	Y	Y	Y	Y	Y	Y	N	N	N	Y	Y	Y	Y	Y	Y	Y
641537	Y	Y	Y	Y	Y	Y	Y	Y	Y	Y	Y	Y	Y	Y	Y	Y	Y	N	N	N	Y	Y	Y	Y	Y	Y	Y
641653	Y	Y	Y	Y	Y	Y	Y	Y	Y	Y	Y	Y	Y	Y	Y	Y	Y	N	N	N	Y	Y	Y	Y	Y	Y	Y
641654	Y	Y	Y	Y	Y	Y	Y	Y	Y	Y	Y	Y	Y	Y	Y	Y	Y	N	N	N	Y	Y	Y	Y	Y	Y	Y
641655	Y	Y	Y	Y	Y	Y	Y	Y	Y	Y	Y	Y	Y	Y	Y	Y	Y	N	N	N	Y	Y	Y	Y	Y	Y	Y
641656	Y	Y	Y	Y	Y	Y	Y	Y	Y	Y	Y	Y	Y	Y	Y	Y	Y	N	N	N	Y	Y	Y	Y	Y	Y	Y
643498	Y	Y	Y	Y	Y	Y	Y	Y	Y	Y	Y	Y	Y	Y	Y	Y	Y	N	N	N	Y	Y	Y	Y	Y	Y	Y
643813	Y	Y	Y	Y	Y	Y	Y	Y	Y	Y	Y	Y	Y	Y	Y	Y	Y	N	N	N	Y	Y	Y	Y	Y	Y	Y
643814	Y	Y	Y	Y	Y	Y	Y	Y	Y	Y	Y	Y	Y	Y	Y	Y	Y	N	N	N	Y	Y	Y	Y	Y	Y	Y
643815	Y	Y	Y	Y	Y	Y	Y	Y	Y	Y	Y	Y	Y	Y	Y	Y	Y	N	N	N	Y	Y	Y	Y	Y	Y	Y
643816	Y	Y	Y	Y	Y	Y	Y	Y	Y	Y	Y	Y	Y	Y	Y	Y	Y	N	N	N	Y	Y	Y	Y	Y	Y	Y
643828	Y	Y	Y	Y	Y	Y	Y	Y	Y	Y	Y	Y	Y	Y	Y	Y	Y	N	N	N	Y	Y	Y	Y	Y	Y	Y
644083	Y	Y	Y	Y	Y	Y	Y	Y	Y	Y	Y	Y	Y	Y	Y	Y	Y	N	N	N	Y	Y	Y	Y	Y	Y	Y
644312	Y	Y	Y	Y	Y	Y	Y	Y	Y	Y	Y	Y	Y	Y	Y	Y	Y	N	N	N	Y	Y	Y	Y	Y	Y	Y
644313	Y	Y	Y	Y	Y	Y	Y	Y	Y	Y	Y	Y	Y	Y	Y	Y	Y	N	N	N	Y	Y	Y	Y	Y	Y	Y
644497	Y	Y	Y	Y	Y	Y	Y	Y	Y	Y	Y	Y	Y	Y	Y	Y	Y	N	N	N	Y	Y	Y	Y	Y	Y	Y
644511	Y	Y	Y	Y	Y	Y	Y	Y	Y	Y	Y	Y	Y	Y	Y	Y	Y	N	N	N	Y	Y	Y	Y	Y	Y	Y
644512	Y	Y	Y	Y	Y	Y	Y	Y	Y	Y	Y	Y	Y	Y	Y	Y	Y	N	N	N	Y	Y	Y	Y	Y	Y	Y
644513	Y	Y	Y	Y	Y	Y	Y	Y	Y	Y	Y	Y	Y	Y	Y	Y	Y	N	N	N	Y	Y	Y	Y	Y	Y	Y
644514	Y	Y	Y	Y	Y	Y	Y	Y	Y	Y	Y	Y	Y	Y	Y	Y	Y	N	N	N	Y	Y	Y	Y	Y	Y	Y
644540	Y	Y	Y	Y	Y	Y	Y	Y	Y	Y	Y	Y	Y	Y	Y	Y	Y	N	N	N	Y	Y	Y	Y	Y	Y	Y
644563	Y	Y	Y	Y	Y	Y	Y	Y	Y	Y	Y	Y	Y	Y	Y	Y	Y	N	N	N	Y	Y	Y	Y	Y	Y	Y
644564	Y	Y	Y	Y	Y	Y	Y	Y	Y	Y	Y	Y	Y	Y	Y	Y	Y	N	N	N	Y	Y	Y	Y	Y	Y	Y
644565	Y	Y	Y	Y	Y	Y	Y	Y	Y	Y	Y	Y	Y	Y	Y	Y	Y	N	N	N	Y	Y	Y	Y	Y	Y	Y
644574	Y	Y	Y	Y	Y	Y	Y	Y	Y	Y	Y	Y	Y	Y	Y	Y	Y	N	N	N	Y	Y	Y	Y	Y	Y	Y
644575	Y	Y	Y	Y	Y	Y	Y	Y	Y	Y	Y	Y	Y	Y	Y	Y	Y	N	N	N	Y	Y	Y	Y	Y	Y	Y
644576	Y	Y	Y	Y	Y	Y	Y	Y	Y	Y	Y	Y	Y	Y	Y	Y	Y	N	N	N	Y	Y	Y	Y	Y	Y	Y
644577	Y	Y	Y	Y	Y	Y	Y	Y	Y	Y	Y	Y	Y	Y	Y	Y	Y	N	N	N	Y	Y	Y	Y	Y	Y	Y
644578	Y	Y	Y	Y	Y	Y	Y	Y	Y	Y	Y	Y	Y	Y	Y	Y	Y	N	N	N	Y	Y	Y	Y	Y	Y	Y
644579	Y	Y	Y	Y	Y	Y	Y	Y	Y	Y	Y	Y	Y	Y	Y	Y	Y	N	N	N	Y	Y	Y	Y	Y	Y	Y
644795	Y	Y	Y	Y	Y	Y	Y	Y	Y	Y	Y	Y	Y	Y	Y	Y	Y	N	N	N	Y	Y	Y	Y	Y	Y	Y
*770602	Y	Y	Y	Y	Y	Y	Y	Y	N	N	Y	Y	N	N	Y	Y	Y	Y	Y	Y	Y	Y	Y	Y	Y	Y	Y

*Select contact plating to match header plating.

For complete product information, order Catalog 82056

Products for Industrial & Commercial Applications

Dimensions are shown for reference purposes only.

Dimensions are in inches and millimeters unless otherwise specified. Values in brackets are metric equivalents.

Specifications subject to change.

Technical Support Center
1-800-522-6752
www.tycoelectronics.com

Matrix for Gold Plated Part Numbers

This matrix has been prepared to assist you, our customer, in defining the correct mating halves for the MTA-100 header and connector combination. Where a "Y" is indicated the combination is a valid mating pair. Where an "N" is indicated the combination is not acceptable for mating.

Matrix for .000030 [0.00076] Gold Plated Part Numbers

Headers

Connectors	641211	641212	641213	641214	641215	641216	644487	644489	644884	644885	644886	644887	644896	644897	644898	647108	647109	647114	647116	647117	647168
641237	Y	Y	Y	Y	Y	Y	Y	Y	Y	Y	Y	Y	N	N	N	Y	Y	Y	Y	Y	Y
641238	Y	Y	Y	Y	Y	Y	Y	Y	Y	Y	Y	Y	N	N	N	Y	Y	Y	Y	Y	Y
641239	Y	Y	Y	Y	Y	Y	Y	Y	Y	Y	Y	Y	N	N	N	Y	Y	Y	Y	Y	Y
641240	Y	Y	Y	Y	Y	Y	Y	Y	Y	Y	Y	Y	N	N	N	Y	Y	Y	Y	Y	Y
641241	Y	Y	Y	Y	Y	Y	Y	Y	Y	Y	Y	Y	N	N	N	Y	Y	Y	Y	Y	Y
641242	Y	Y	Y	Y	Y	Y	Y	Y	Y	Y	Y	Y	N	N	N	Y	Y	Y	Y	Y	Y
641243	Y	Y	Y	Y	Y	Y	Y	Y	Y	Y	Y	Y	N	N	N	Y	Y	Y	Y	Y	Y
641244	Y	Y	Y	Y	Y	Y	Y	Y	Y	Y	Y	Y	N	N	N	Y	Y	Y	Y	Y	Y
644020	Y	Y	Y	Y	Y	Y	Y	Y	Y	Y	Y	Y	N	N	N	Y	Y	Y	Y	Y	Y
644042	Y	Y	Y	Y	Y	Y	Y	Y	Y	Y	Y	Y	N	N	N	Y	Y	Y	Y	Y	Y
644043	Y	Y	Y	Y	Y	Y	Y	Y	Y	Y	Y	Y	N	N	N	Y	Y	Y	Y	Y	Y
644044	Y	Y	Y	Y	Y	Y	Y	Y	Y	Y	Y	Y	N	N	N	Y	Y	Y	Y	Y	Y
644702	Y	Y	Y	Y	Y	Y	Y	Y	Y	Y	Y	Y	N	N	N	Y	Y	Y	Y	Y	Y
644726	Y	Y	Y	Y	Y	Y	Y	Y	Y	Y	Y	Y	N	N	N	Y	Y	Y	Y	Y	Y
*770602	Y	Y	Y	Y	Y	Y	N	N	Y	Y	Y	Y	Y	Y	Y	Y	Y	Y	Y	Y	Y

Matrix for .000015 [0.00038] Gold Plated Part Numbers

Headers

Connectors	641122	641123	641124	641125	641126	641127	644888	644889	644890	644891	647075	647076	647078	647079	647107	647167
641190	Y	Y	Y	Y	Y	Y	Y	Y	Y	Y	Y	Y	Y	Y	Y	Y
641191	Y	Y	Y	Y	Y	Y	Y	Y	Y	Y	Y	Y	Y	Y	Y	Y
641192	Y	Y	Y	Y	Y	Y	Y	Y	Y	Y	Y	Y	Y	Y	Y	Y
641193	Y	Y	Y	Y	Y	Y	Y	Y	Y	Y	Y	Y	Y	Y	Y	Y
641198	Y	Y	Y	Y	Y	Y	Y	Y	Y	Y	Y	Y	Y	Y	Y	Y
641199	Y	Y	Y	Y	Y	Y	Y	Y	Y	Y	Y	Y	Y	Y	Y	Y
641200	Y	Y	Y	Y	Y	Y	Y	Y	Y	Y	Y	Y	Y	Y	Y	Y
641201	Y	Y	Y	Y	Y	Y	Y	Y	Y	Y	Y	Y	Y	Y	Y	Y
644038	Y	Y	Y	Y	Y	Y	Y	Y	Y	Y	Y	Y	Y	Y	Y	Y
644040	Y	Y	Y	Y	Y	Y	Y	Y	Y	Y	Y	Y	Y	Y	Y	Y
*770602	N	N	N	N	N	N	N	N	N	N	N	N	N	N	N	N

*Select contact plating to match header plating.

For complete product information, order Catalog 82056

Products for Industrial & Commercial Applications
Dimensions are shown for reference purposes only.
Dimensions are in inches and millimeters unless otherwise specified. Values in brackets are metric equivalents.
Specifications subject to change.
Technical Support Center
1-800-522-6752
www.tycoelectronics.com

Closed End and Feed-Thru Connectors

Material and Finish:

Housing — UL94V-2 rated, type 6/6 nylon, see below for color; or UL94V-0 rated, nylon, black

Contacts — Phosphor bronze, post tin plated, .000030 [0.00076] or .000015 [0.00038] post gold-plated over nickel

Color Coding by Wire Size for UL94V-2 Connectors

28 AWG — Green
26 AWG — Blue
24 AWG — White
22 AWG — Red

All wire sizes in UL94V-0 — Black

For mateability options, see matrix on pages 2186 and 2187.

For mating half visuals, see pages 2191 thru 2196.

Notes:

1. Refer to page 2219 thru 2223 for approved wire listing.
2. For strain reliefs and dust covers, see page 2190.
3. Other circuit sizes are available upon request. Minimums may apply.
4. Connector circuits can be molded closed for keying purposes. Minimums may apply.
5. Where no part numbers appear in the chart, parts can be made available upon request. Minimums may apply.
6. To determine connector overall length (dim. A), multiply .100 x the number of circuits. Example: .100 x 10 circuits equals 1.000 inch [25.4 mm].

Connector Ordering Information

The "Base Part Numbers" Chart at right shows the base part number and number of circuits available for the described connectors.

Prefixes and suffixes are determined by the number of circuit positions in the connector. For example, the complete part number for a 10-position closed end connector without polarizing tabs for 22 AWG wire would be:

Base number **xxxxxx** plus prefix-and-suffix

1- — -0

The correct ordering number is

1-xxxxxx-0

For complete product information, order Catalog 82056

Base Part Numbers

Connector Type & Wire Size	Closed End				Feed-Thru			
	Without Tabs		With Tabs		Without Tabs		With Tabs	
	Connector Part Nos.	No. of Circuits	Connector Part Nos.	No. of Circuits	Connector Part Nos.	No. of Circuits	Connector Part Nos.	No. of Circuits
Standard UL94V-2, Tin Plated								
22 AWG 0.3-0.4 mm²	640440	2–28	643813	2–28	640620	2–28	644540[1]	2–15
24 AWG 0.2 mm²	640441	2–28	643814	2–28	640621	2–28	644563[1]	2–24
26 AWG 0.12-0.15 mm²	640442	2–28	643815	2–28	640622	2–28	644564[1]	2–15
28 AWG 0.08-0.09 mm²	640443	2–28	643816	2–28	640623	2–28	644565[1]	2–15
Tape Mounted on Reel UL94V-2, Tin Plated								
22 AWG 0.3-0.4 mm²	640468	2–28	644511	2–28	641311	2–28	—	—
24 AWG 0.2 mm²	640469	2–28	644512	2–28	641312	2–28	—	—
26 AWG 0.12-0.15 mm²	640470	2–28	644513	2–28	641313	2–28	—	—
28 AWG 0.08-0.09 mm²	640471	2–28	644514	2–28	641314	2–28	—	—
Standard UL94V-2, .000030 [0.00076] Gold Plated								
22 AWG 0.3-0.4 mm²	641237	2–28	644042	2-28	641241	2-28	644702[1]	2-15
24 AWG 0.2 mm²	641238	2–28	644020	2-28	641242	2-28	—	—
26 AWG 0.12-0.15 mm²	641239	2–28	644043[1]	2-14	641243	2-28	644726[1]	2-15
28 AWG 0.8-0.9 mm²	641240	2–28	644044[1]	2-14	641244	2-28	—	—
Standard UL94V-2, .000015 [0.00038] Gold Plated								
22 AWG 0.3-0.4 mm²	641190	2–28	644038[1]	2-14	641198	2-28	—	—
24 AWG 0.2 mm²	641191	2–28	—	—	641199	2-28	—	—
26 AWG 0.12-0.15 mm²	641192	2–28	644040[1]	2-14	641200	2-28	—	—
28 AWG 0.08-0.09 mm²	641193	2–28	—	—	641201	2-28	—	—
LED*, UL94V-2, Tin Plated (See Note 1)								
22 AWG 0.3-0.4 mm²	641534	2–3	—	—	641653	2–3	—	—
24 AWG 0.2 mm²	641535	2–3	644795	2-3	641654	2–3	—	—
26 AWG 0.12-0.15 mm²	641536 644343[2]	2–3 2	—	—	641655	2–3	—	—
28 AWG 0.08-0.09 mm²	641537	2–3	—	—	641656	2–3	—	—
Standard UL94V-0, Tin Plated (Gold is available, minimums may apply.) (Black in color)								
22 AWG 0.3-0.4 mm²	643498[1]	2–15	644083[1]	2–15	644575[1]	2–15	644578[1]	2–15
24 AWG 0.2 mm²	644574[1]	2–15	644312[1]	2–15	644576[1]	2–15	644579[1]	2–15
26 AWG 0.12-0.15 mm²	643828[1]	2–15	644313[1]	2–15	644577[1]	2–15	644497[1]	2–15

*LED connectors are designed to mate with .014–.020 [0.36–0.51] diameter posts or square leads.
[1] Other circuit sizes are available upon request. Minimums may apply.
[2] Tape mounted
Note: Blocked circuit configurations are available. Contact product engineer or product manager for details. Minimums may apply.

Closed End Connectors

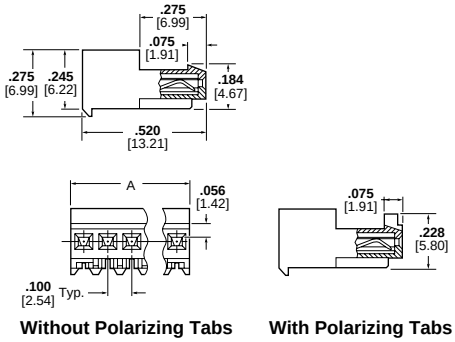

Without Polarizing Tabs **With Polarizing Tabs**

Feed-Thru Connectors

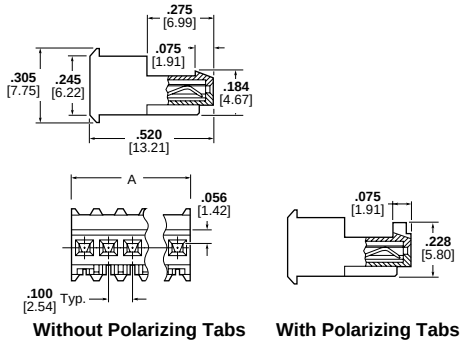

Without Polarizing Tabs **With Polarizing Tabs**

MTA-100 IDC Connector Accessories

Keying Plug with Carrier Strip (10 plugs per strip) Part No. 641994-1

Material

UL94V-2 rated, type 6/6 nylon, natural color

Note: Removal of contact is not necessary when using keying plug.

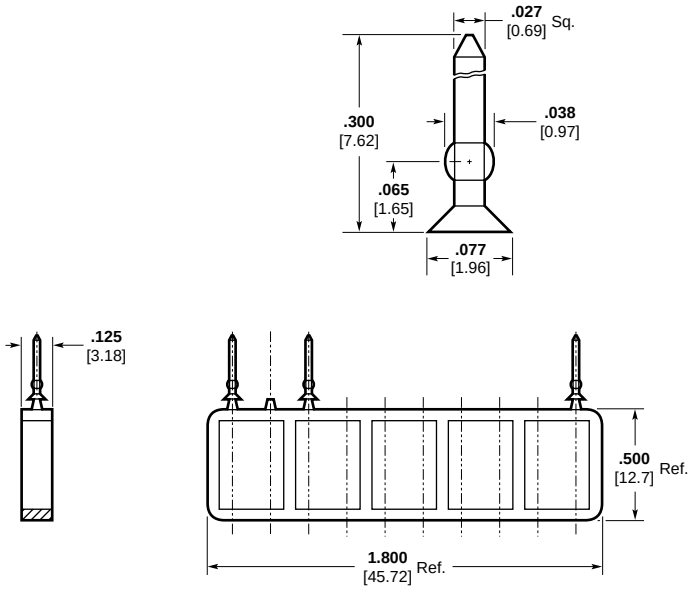

Replacement IDC Contacts

Material and Finish

Phosphor bronze, post tin plated; .000030 [0.00076] or .000015 [0.00038] post gold plated over nickel

Note:
Tyco Electronics Corporation does not recommend terminating an MTA contact more than one time. Use replacement contacts when required for field repairs or wire changes.

Wire Size		Part Numbers			
AWG	mm²	Standard Tin Plated	.000030 [0.00076] Gold Plated	.000015 [0.00038] Gold Plated	LED Tin Plated
22	0.3-0.4	640636-1	641186-2	641186-1	641643-1
24	0.2	640637-1	641187-2	641187-1	641644-1
26	0.12-0.15	640638-2	641188-2	641188-1	641645-1
28	0.08-0.09	640639-1	641189-2	641189-1	641646-1

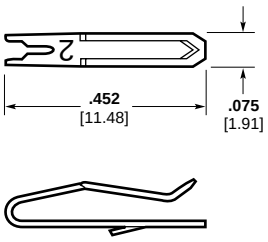

Crimp Snap-In Contacts

Material and Finish

Phosphor bronze, tin plated

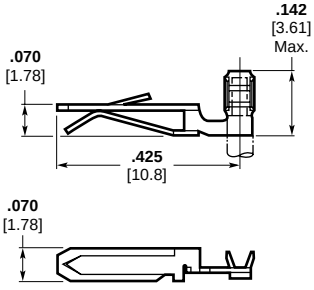

Wire Size		Part Nos.	
AWG	mm²	Loose Piece*	Strip**
26-22	0.12-0.4	640709-1	640708-1

*Hand Tool No. 59836-1 (IS 408-6527)
**Applicator No. 466747-1 (AI 408-8040)

Special applications for crimp snap-in contacts are:
1. Double wire per contact
2. Coax or shielded wire
3. Mixed wire size in same connector

Note: Only one crimp snap-in contact per connector.

For complete product information, order Catalog 82056

Products for Industrial & Commercial Applications
Dimensions are shown for reference purposes only.
Dimensions are in inches and millimeters unless otherwise specified. Values in brackets are metric equivalents.
Specifications subject to change.
Technical Support Center
1-800-522-6752
www.tycoelectronics.com

Accessories

Covers

Material

Strain Relief Cover — UL94V-2 rated, nylon, white

Dust Covers — UL94V-0 rated, polyester, white

Closed End Strain Relief Covers

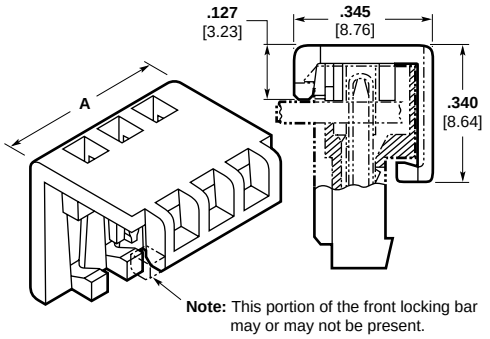

Note: This portion of the front locking bar may or may not be present.

Closed End Dust Covers

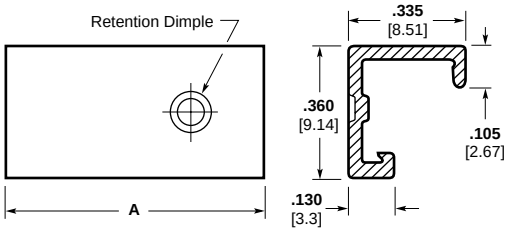

Feed-Thru Strain Relief Covers

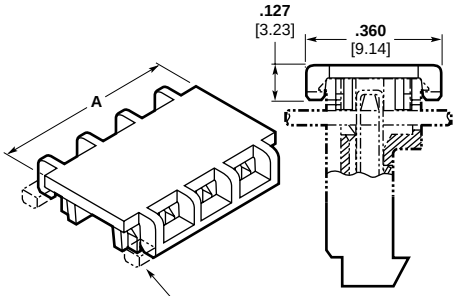

Note: This portion of the front locking bar may or may not be present.

Feed-Thru Dust Covers

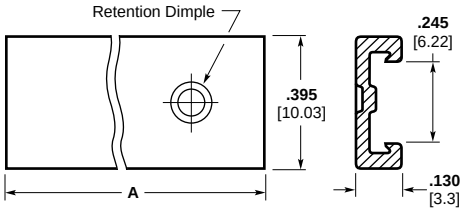

Cover Ordering Information

The "Base Part Numbers" Chart at right shows the base part number and number of circuits available for the described cover.

Prefixes and suffixes are determined by the number of circuit positions in the cover. For example, the complete part number for a 10-position closed end strain relief cover would be:

Base number **xxxxxx** plus prefix-and-suffix

1- — -0

The correct ordering number is

1-xxxxxx-0

Base Part Numbers

Closed End				Feed-Thru			
Strain Relief Covers		Dust Covers		Strain Relief Covers		Dust Covers	
Cover Part Numbers	No. of Circuits	Cover Part Numbers	No. of Circuits	Cover Part Numbers	No. of Circuits	Cover Part Numbers	No. of Circuits
643075	2-28	640550	2-28	643077	2-28	640642	3-28

Cover Length

No. of Circuits	Dim. A	Prefix/ Suffix
2	**.200** 5.08	-2
3	**.300** 7.62	-3
4	**.400** 10.16	-4
5	**.500** 12.7	-5
6	**.600** 15.24	-6
7	**.700** 17.78	-7
8	**.800** 20.32	-8

No. of Circuits	Dim. A	Prefix/ Suffix
9	**.900** 22.86	-9
10	**1.00** 25.4	1- -0
11	**1.100** 27.94	1- -1
12	**1.200** 30.48	1- -2
13	**1.300** 33.02	1- -3
14	**1.400** 35.56	1- -4
15	**1.500** 38.1	1- -5

No. of Circuits	Dim. A	Prefix/ Suffix
16	**1.600** 40.64	1- -6
17	**1.700** 43.18	1- -7
18	**1.800** 45.72	1- -8
19	**1.900** 48.26	1- -9
20	**2.000** 50.8	2- -0
21	**2.100** 53.34	2- -1
22	**2.200** 55.88	2- -2

No. of Circuits	Dim. A	Prefix/ Suffix
23	**2.300** 58.42	2- -3
24	**2.400** 60.96	2- -4
25	**2.500** 63.5	2- -5
26	**2.600** 66.04	2- -6
27	**2.700** 68.58	2- -7
28	**2.800** 71.12	2- -8

For complete product information, order Catalog 82056

Products for Industrial & Commercial Applications
Dimensions are shown for reference purposes only.
Dimensions are in inches and millimeters unless otherwise specified. Values in brackets are metric equivalents.
Specifications subject to change.
Technical Support Center
1-800-522-6752
www.tycoelectronics.com

Posted Connectors (Wire-to-Wire) — Closed End, Feed-Thru

Material and Finish:

Housing — UL 94V-2 rated, 6/6, 6/12 nylon, see chart for color

Contacts — Copper alloy, post tin or gold plated over nickel (see chart)

Notes:
1. Mating half visuals - page 2188.
2. Use feed-thru strain relief covers & feed-thru dust covers (if needed) - page 2190.
3. Approved wire listing - pages 2219 thru 2223.

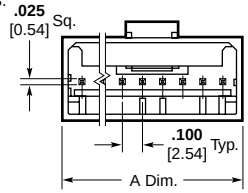

Connector Ordering Information

The "Base Part Numbers" Chart at right shows the base part number and number of circuits available for the described connectors.

Prefixes and suffixes are determined by the number of circuit positions in the connector. For example, the complete part number for a 12-position closed end connector for 22 AWG wire would be:

Base number **xxxxxx** plus prefix-and-suffix

1- — -2

The correct ordering number is

1-xxxxxx-2

Color Coding by Wire Size for UL 94V-2 Connectors

22 AWG — Red
24 AWG — White
26 AWG — Blue
28 AWG — Green

Performance Data:

Voltage Rating — 250 VAC
Current Rating — 4 amp max.
Low-Level Resistance — 16 mΩ max. initial
Dielectric Withstanding Voltage — 750 VAC/1 min.
Insulation Resistance — 5000 MΩ min. initial
Operating Temperature — –55°C to +105°C

Technical Documents:

Product Specification
108-1050-1 MTA-100 Posted Connector

Closed End

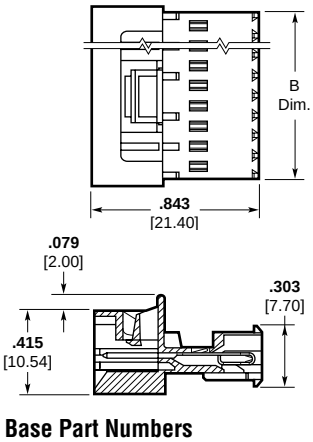

Feed-Thru

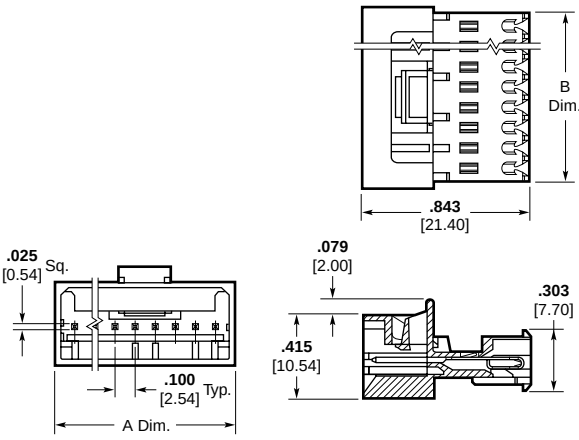

Base Part Numbers

Connector Type & Wire Size	Closed End Connector		Feed-Thru Connector	
	Part Numbers	No. of Circuits	Part Numbers	No. of Circuits
Standard UL 94V-2, Tin Plated				
22 AWG 0.3-0.4 mm²	647000	2 - 19[1]	647004	—[2]
24 AWG 0.2 mm²	647001	2 - 19[1]	647005	—[2]
26 AWG 0.12-0.15 mm²	647002	2 - 19[1]	647006	—[2]
28 AWG 0.08-0.09 mm²	647003	2 - 19[1]	647007	—[2]
Standard UL 94V-2, .000030 [0.00076] Gold Plated				
22 AWG 0.3-0.4 mm²	647008	2 - 19[1]	647012	—[2]
24 AWG 0.2 mm²	647009	2 - 19[1]	647013	—[2]
26 AWG 0.12-0.15 mm²	647010	2 - 19[1]	647014	—[2]
28 AWG 0.08-0.09 mm²	647011	2 - 19[1]	647015	—[2]
Standard UL 94V-2, .000015 [0.00038] Gold Plated				
22 AWG 0.3-0.4 mm²	647016	2 - 19[1]	647020	—[2]
24 AWG 0.2 mm²	647017	2 - 19[1]	647021	—[2]
26 AWG 0.12-0.15 mm²	647018	2 - 19[1]	647022	—[2]
28 AWG 0.08-0.09 mm²	647019	2 - 19[1]	647023	—[2]

[1] 2 and 3 position MTA-100 Posted Connectors (Closed End) **can not mate** with MTA-100 connectors with polarizing tabs.
[2] Other sizes may be manufactured upon request. Minimums may apply. Contact Product Engineer or Product Manager for details.

No. of Circuits	Dim. A	Dim. B
2	**.300** [7.62]	**.227** [5.77]
3	**.400** [10.16]	**.327** [8.31]
4	**.500** [12.70]	**.427** [10.85]
5	**.600** [15.24]	**.527** [13.39]

No. of Circuits	Dim. A	Dim. B
6	**.700** [17.78]	**.627** [15.93]
7	**.800** [20.32]	**.727** [18.47]
8	**.900** [22.86]	**.827** [21.01]
9	**1.000** [25.40]	**.927** [23.55]

No. of Circuits	Dim. A	Dim. B
10	**1.100** [27.94]	**1.027** [26.09]
11	**1.200** [30.48]	**1.127** [28.63]
12	**1.300** [33.02]	**1.227** [31.17]
13	**1.400** [35.56]	**1.327** [33.71]

No. of Circuits	Dim. A	Dim. B
14	**1.500** [38.10]	**1.427** [36.25]
15	**1.600** [40.64]	**1.527** [38.79]
16	**1.700** [43.18]	**1.627** [41.33]
17	**1.800** [45.72]	**1.727** [43.87]
18	**1.900** [48.26]	**1.827** [46.41]
19	**2.000** [50.80]	**1.927** [48.95]

Application Specification

114-1019 MTA-100 Connectors

Replacement IDC Contacts

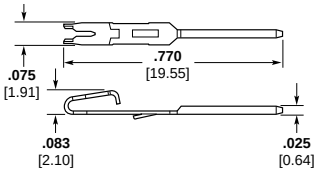

Material and Finish:

Contacts — Copper alloy, post tin or gold plated over nickel

Wire Size AWG	Wire Size mm²	Part Numbers Tin Plated	Part Numbers .000030 [.00076] Gold Plated
22	0.3-0.4	647030-1	647030-3
24	0.2	647031-1	647031-3
26	0.12-0.15	647032-1	647032-3
28	0.8-0.9	647033-1	647033-3

For complete product information, order Catalog 82056

Products for Industrial & Commercial Applications
Dimensions are shown for reference purposes only.
Dimensions are in inches and millimeters unless otherwise specified. Values in brackets are metric equivalents.
Specifications subject to change.
Technical Support Center
1-800-522-6752
www.tycoelectronics.com

Flat Headers — Straight and Right-Angle

Material and Finish:

Housing — UL94V-0 rated, polyester, white
Posts — Copper alloy, tin plated, .000030 [0.00076] or .000015 [0.00038] gold over nickel

Notes: MTA-100 Flat Headers
1. Post(s) can be omitted for keying purposes. Specify the desired post(s) to be omitted using the figure to identify Post No. 1.
2. Gold headers are duplex plated, gold on mating end of post and tin on the soldertail.
3. To determine header overall length (dim. A) multiply .100 x the number of posts. Example: .100 x 10 posts equals 1.000 inch [25.4 mm].

Notes: MTA-100 Narrow Flat Headers
1. Post(s) can be omitted for keying purposes. Specify the desired post(s) to be omitted using the figure to identify Post No. 1.
2. Headers without retentive legs are suitable for breakaway application.
3. 2 or 3 retentive leg(s) per header, depending upon number of positions.
4. Gold headers are duplex plated, gold on mating end of post and tin on the solder tail.
5. To determine header overall length (dim. A) multiply .100 x the number of posts minus (–) .012. Example: .100 x 10 posts – .012 = .988 inches [25.1 mm].

For mateability options, see matrix on pages 2186 and 2187.

For mating half visuals, see page 2188.

Header Ordering Information

The "Base Part Numbers" Chart at right shows the base part number and number of posts available for the described headers.

Prefixes and suffixes are determined by the number of post positions in the header. For example, the complete part number for a 10-position header with straight posts would be:

Base number **xxxxxx** plus prefix-and-suffix

1- — -0

The correct ordering number is

1-xxxxxx-0

Note:
Select load headers (omitted pin headers) are available upon request. Please contact product engineer or product manager for details.

Straight Post (.025 [0.64] Square)

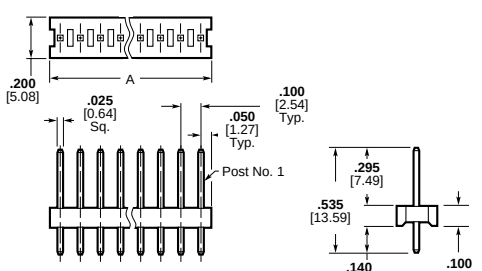

Right-Angle Post (.025 [0.64] Square)

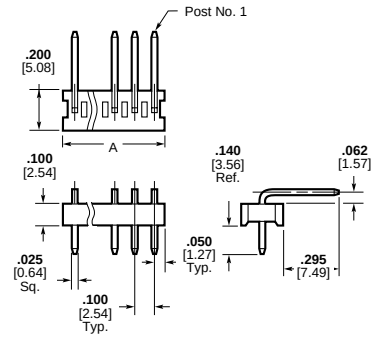

Note: Consult Product Drawing for details on placing headers onto pc boards.

Base Part Numbers

Straight Posts		Right-Angle Posts	
Header Part Numbers	No. of Posts	Header Part Numbers	No. of Posts
Standard UL94V-0, Tin Plated			
640452	2-28	640453	2-28
Standard UL94V-0, .000030 [0.00076] Gold Plated			
641211	2-28	641212	2-28
Standard UL94V-0, .000015 [0.00038] Gold Plated			
641122	2-28	641123	2-28

Straight Headers
X = .120 [3.05] Min.

Right-Angle Headers
X = .120 [3.05] Min., .240 [6.1] Max. when mated with MTA-100 Connector.
X = .120 [3.05] Min., when mated with CST-100 II Connector.

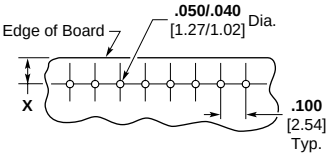

Recommended Mounting Hole Size for .062 [1.57] Thk. PC Board

Narrow Flat Headers — Straight and Right-Angle

Straight Post (.025 [0.64] Square)

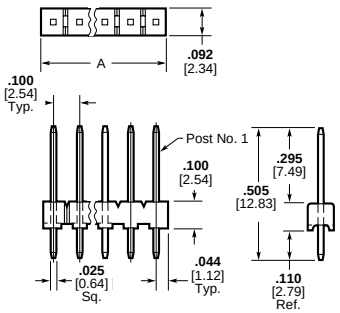

Right-Angle Post (.025 [0.64] Square)

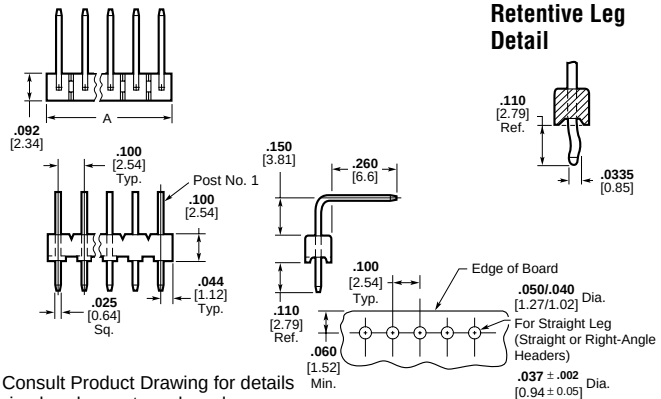

Retentive Leg Detail

Note: Consult Product Drawing for details on placing headers onto pc boards.

Recommended Mounting Hole Size for .062 [1.57] Thk. PC Board

Base Part Numbers

Straight Posts				Right-Angle Posts			
Without Retentive Legs		With Retentive Legs		Without Retentive Legs		With Retentive Legs	
Header Part Numbers	No. of Posts	Header Part Numbers	No. of Posts	Header Part Numbers	No. of Posts	Header Part Numbers	No. of Posts
Standard UL94V-0, Tin Plated							
644456	2-28	644695	2-28	644457	2-28	644694	2-28
Standard UL94V-0, .000030 [0.00076] Gold Plated							
644884	2-28	644886	2-28	644885	2-28	644887	2-28
Standard UL94V-0, .000015 [0.00038] Gold Plated							
644888	2-28	644890	2-28	644889	2-28	644891	2-28

For complete product information, order Catalog 82056

Products for Industrial & Commercial Applications
Dimensions are shown for reference purposes only.
Dimensions are in inches and millimeters unless otherwise specified. Values in brackets are metric equivalents.
Specifications subject to change.
Technical Support Center
1-800-522-6752
www.tycoelectronics.com

Polarized Headers — Straight and Right-Angle

Material and Finish:

Housing — UL94V-0 rated, polyester, white

Posts — Copper alloy, tin plated, .000030 [0.00076] or .000015 [0.00038] gold over nickel

Notes:
1. Post(s) can be omitted for keying purposes. Specify the desired post(s) to be omitted using the figure to identify Post No. 1.
2. Gold headers are duplex plated, gold on mating end of post and tin on the soldertail.
3. All posts on retentive leg headers are bent.
4. To determine header overall length (dim. A) multiply .100 x the number of posts. Example: .100 x 10 posts equals 1.000 inch [25.4 mm].
5. PCB detail shown below is the same for Polarized & Friction Lock Headers.

Straight Post (.025 [0.64] Square)

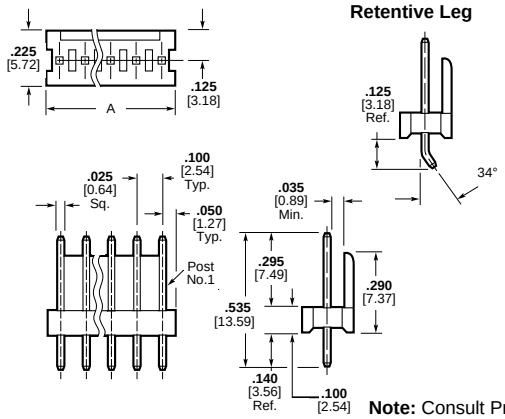

Right-Angle Post (.025 [0.64] Square)

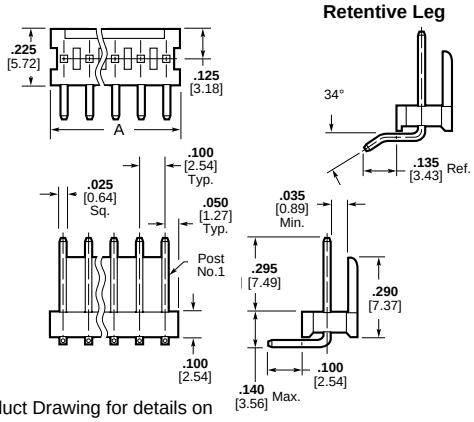

Note: Consult Product Drawing for details on placing headers onto pc boards. (See Note 5.)

Base Part Numbers

Straight Posts				Right-Angle Posts			
Without Retentive Legs		With Retentive Legs		Without Retentive Legs		With Retentive Legs	
Header Part Numbers	No. of Posts	Header Part Numbers	No. of Posts	Header Part Numbers	No. of Posts	Header Part Numbers	No. of Posts
Standard UL94V-0, Tin Plated							
640454	2-28	644876	2-28	640455	2-28	644877	2-28

For mateability options, see matrix on pages 2186 and 2187.

For mating half visuals, see page 2188.

Header Ordering Information

The "Base Part Numbers" Chart at right shows the base part number and number of posts available for the described headers.

Prefixes and suffixes are determined by the number of post positions in the header. For example, the complete part number for a 10-position header with straight posts would be:

Base number **xxxxxx** plus prefix-and-suffix

1- — -0

The correct ordering number is

1-xxxxxx-0

Note:
Select load headers (omitted pin headers) are available upon request. Please contact product engineer or product manager for details.

For complete product information, order Catalog 82056

Friction Lock Headers — Straight and Right-Angle

Straight Post (.025 [0.64] Square)

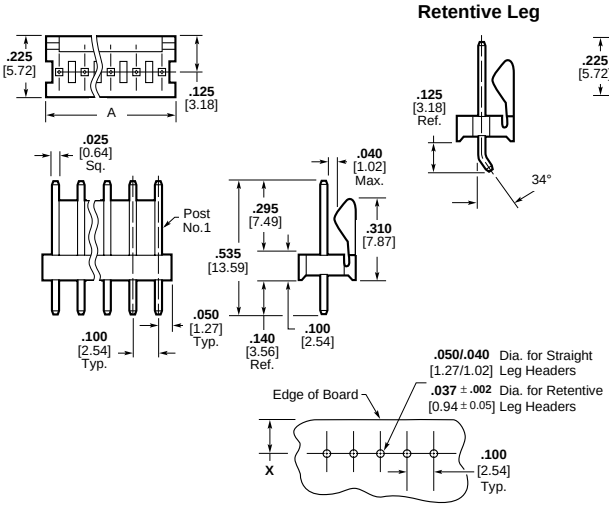

Recommended Mounting Hole Size for .062 [1.57] Thk. PC Board

Right-Angle Post (.025 [0.64] Square)

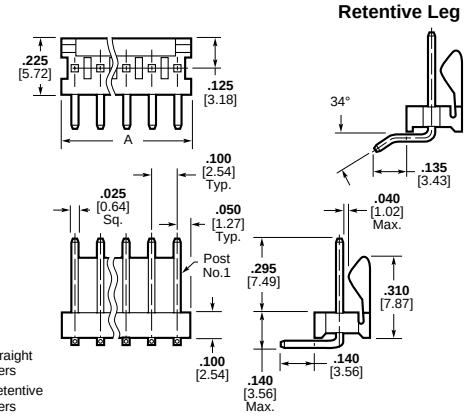

X = .130 [3.30] Min. for Straight Headers
X = .110 [2.79] Min., .160 [4.06] Max. for Right-Angle Headers when mated with MTA-100 Connectors
X = .110 [2.79] Min., .120 [3.04] Max. for Right-Angle Headers when mated with CST-100 II Connectors

Note: Consult Product Drawing for details on placing headers onto pc boards.

Base Part Numbers

Straight Posts				Right-Angle Posts			
Without Retentive Legs		With Retentive Legs		Without Retentive Legs		With Retentive Legs	
Header Part Numbers	No. of Posts	Header Part Numbers	No. of Posts	Header Part Numbers	No. of Posts	Header Part Numbers	No. of Posts
Standard UL94V-0, Tin Plated							
640456	2-28	644874	2-28	640457	2-28	644875	2-28
Standard UL94V-0, .000030 [0.00076] Gold Plated							
641215	2-28	—	—	641216	2-28	—	—
Standard UL94V-0, .000015 [0.00038] Gold Plated							
641126	2-28	—	—	641127	2-28	—	—

Products for Industrial & Commercial Applications
Dimensions are shown for reference purposes only.
Dimensions are in inches and millimeters unless otherwise specified. Values in brackets are metric equivalents.
Specifications subject to change.
Technical Support Center
1-800-522-6752
www.tycoelectronics.com

Polarized High Temperature Headers (For use with Infrared Reflow Process)

Maximum Temperature Rating: 235°C

Material and Finish:

Housing — UL94V-0 rated, thermoplastic, black

Posts — Copper alloy, tin plated, .000030 [0.00076] or .000015 [0.00038] gold over nickel

Notes:
1. Post(s) can be omitted for keying purposes. Specify the desired post(s) to be omitted using the figure to identify Post No. 1.
2. Gold headers are duplex plated, gold on mating end of post and tin on the soldertail.
3. To determine header overall length (dim. A) multiply .100 x the number of posts. Example: .100 x 10 posts equals 1.000 inch [25.4 mm].

Straight Post (.025 [0.64] Square)

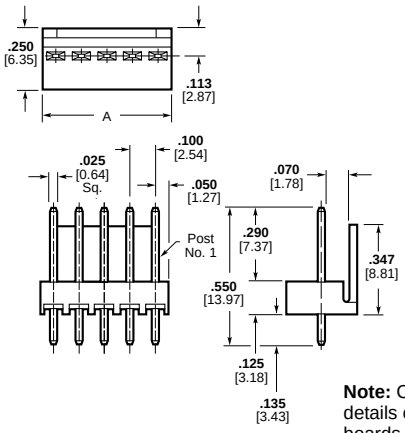

Right-Angle Post (.025 [0.64] Square)

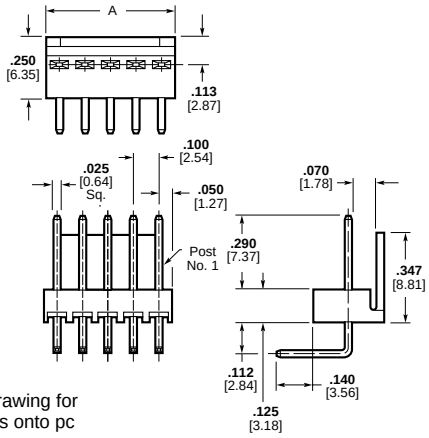

Note: Consult Product Drawing for details on placing headers onto pc boards.

Base Part Numbers

Straight Posts		Straight Posts Tube Loaded		Right-Angle Posts	
Header Part Number	No. of Posts	Header Part Number	No. of Posts	Header Part Number	No. of Posts
Standard UL94V-0, Tin-Lead Plated					
647047	2-18	647298	2-18	647048	2-18
Standard UL94V-0, .000030 [0.00076] Gold Plated					
647109	2-18	647300	2-18	647114	2-18
Standard UL94V-0, .000015 [0.00038] Gold Plated					
647075	2-18	647299	2-18	647076	2-18

For mateability options, see matrix on pages 2186 and 2187.

For mating half visuals, see page 2188.

Header Ordering Information

The "Base Part Numbers" Chart at right shows the base part number and number of posts available for the described headers.

Prefixes and suffixes are determined by the number of post positions in the header. For example, the complete part number for a 10-position header with straight posts would be:

Base number **xxxxxx** plus prefix-and-suffix

1- — -0

The correct ordering number is

1-xxxxxx-0

Note:
Select load headers (omitted pin headers) and special packaging can be made available upon request. Minimums may apply. Please contact product engineer or product manager for details.

Friction Lock High Temperature Headers (For use with Infrared Reflow Process)

Maximum Temperature Rating: 235°C

Straight Post (.025 [0.64] Square)

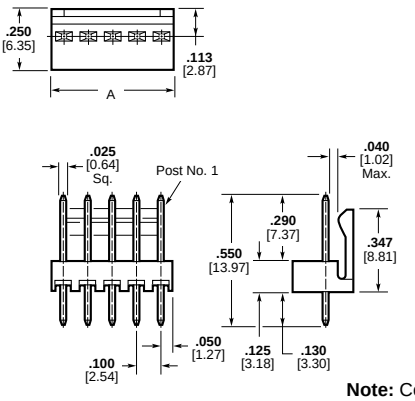

Right-Angle Post (.025 [0.64] Square)

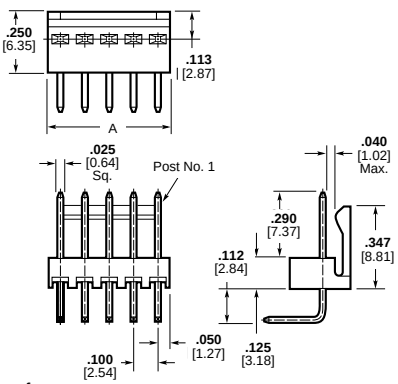

Note: Consult Product Drawing for details on placing headers onto pc boards.

Base Part Numbers

Straight Posts		Straight Posts Tube Loaded		Right-Angle Posts	
Header Part Number	No. of Posts	Header Part Number	No. of Posts	Header Part Number	No. of Posts
Standard UL94V-0, Tin-Lead Plated					
647050	2-18	647295	2-18	647051	2-18
Standard UL94V-0, .000030 [0.00076] Gold Plated					
647116	2-18	647297	2-18	647117	2-18
Standard UL94V-0, .000015 [0.00038] Gold Plated					
647078	2-18	647296	2-18	647079	2-18

For complete product information, order Catalog 82056

Products for Industrial & Commercial Applications
Dimensions are shown for reference purposes only.
Dimensions are in inches and millimeters unless otherwise specified. Values in brackets are metric equivalents.
Specifications subject to change.
Technical Support Center
1-800-522-6752
www.tycoelectronics.com

Polarized and Friction Lock Surface Mount Headers — Straight

For use with Infrared Reflow Process

Maximum Temperature Rating: 235°C

Material and Finish:

Housing — UL94V-0 rated, thermoplastic, black

Posts — Copper alloy, tin plated, .000030 [0.00076] or .000015 [0.00038] gold over nickel

Notes:
1. Post(s) can be omitted for keying purposes. Specify the desired post(s) to be omitted using the figure to identify Post No. 1.
2. Gold headers are duplex plated, gold on mating end of post and tin on the soldertail.
3. To determine header overall length (dim. A) multiply .100 x the number of posts. Example: .100 x 10 posts equals 1.000 inch [25.4 mm].

For mateability options, see matrix on pages 2186 and 2187.

For mating half visuals, see page 2188.

Header Ordering Information

The "Base Part Numbers" Chart at right shows the base part number and number of posts available for the described headers.

Prefixes and suffixes are determined by the number of post positions in the header. For example, the complete part number for a 10-position surface mount polarized header would be:

Base number **xxxxxx** plus prefix-and-suffix

1- — -0

The correct ordering number is

1-xxxxxx-0

Note:
Select load headers (omitted pin headers) are available upon request. Please contact product engineer or product manager for details.

Polarized Header

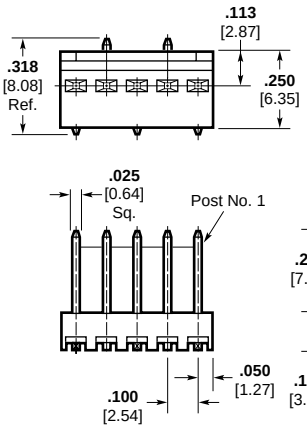

Friction Lock Header

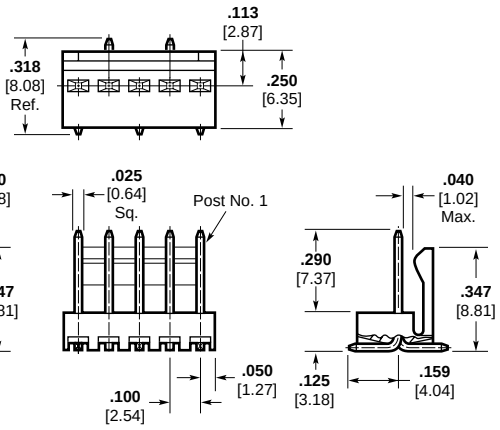

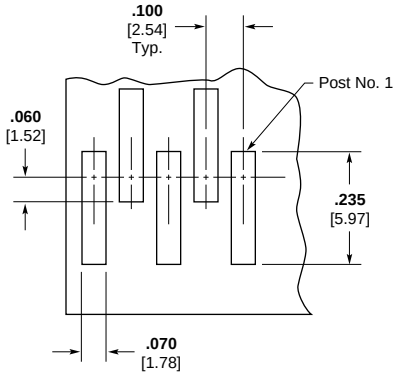

Recommended PC Board Layout for use with .010 [0.25] Thick Stencil

Base Part Numbers

	Polarized Headers		Friction Lock Headers	
	Header Part Numbers	No. of Posts	Header Part Numbers	No. of Posts
Standard UL94V-0, Tin-Lead Plated				
	647106	2-18[1]	647166	2-18[1]
Standard UL94V-0, .000030 [0.00076] Gold Plated				
	647108	2-18[1]	647168	2-18[1]
Standard UL94V-0, .000015 [0.00038] Gold Plated				
	647107	2-18[1]	647167	2-18[1]

[1] Alternate packaging may be available upon request. Minimums may apply. Contact Product Engineer or Product Manager for details.

Shrouded Headers — Straight and Right-Angle

Material and Finish:

Housing — UL94V-0 rated, polyester, black

Posts — Copper alloy, tin plated; or .000030 [0.00076] gold over nickel

Notes:
1. Post(s) can be omitted for keying purposes. Specify the desired post(s) to be omitted using the figure to identify Post No. 1.
2. Headers with .000015 [0.00038] gold plated post are available upon request. Minimums may apply.
3. Gold headers are duplex plated, gold on mating end of post and tin on the soldertail.

For mateability options, see matrix on pages 2186 and 2187.

For mating half visuals, see page 2188.

Header Ordering Information

The "Base Part Numbers" Chart at right shows the base part number and number of posts available for the described headers.

Prefixes and suffixes are determined by the number of post positions in the header. For example, the complete part number for a 10-position header with straight post and with pegs would be:

Base number **xxxxxx** plus prefix-and-suffix

1- — -0

The correct ordering number is

1-xxxxxx-0

Notes:
1. Select load headers (omitted pin headers) are available upon request. Please contact product engineer or product manager for details.
2. MTA-100 shrouded headers **do not mate** with CST-100 II housings.

Straight Post (.025 [0.64] Square)

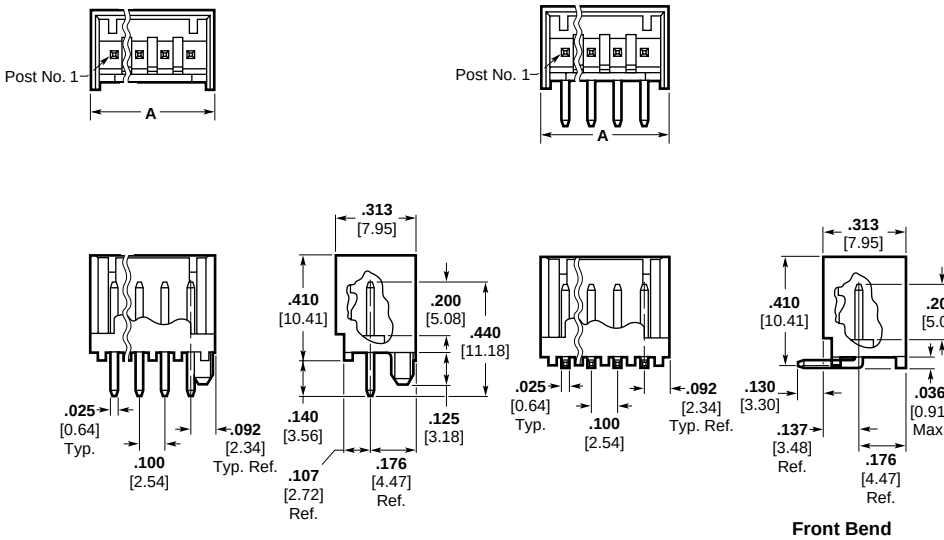

Right-Angle Post (.025 [0.64] Square)

Front Bend



Polarized Retention Peg

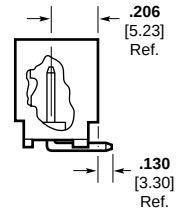

Rear Bend

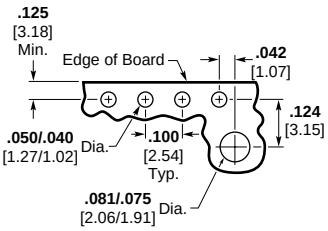

Recommended Mounting Hole Size for .062 [1.57] Thk. PC Board
(Solder Side of Board Shown)

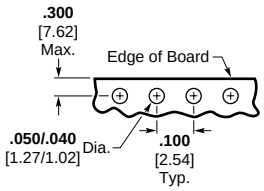

Recommended Mounting Hole Size for .062 [1.57] Thk. PC Board
(Solder Side of Board Shown)

Note: Consult Product Drawing for details on placing headers onto pc boards.

Base Part Numbers

Straight Posts				Right-Angle Posts			
With Pegs		Without Pegs		Without Pegs Only			
				Front Bend		Rear Bend	
Header Part Numbers	No. of Posts	Header Part Numbers	No. of Posts	Header Part Numbers	No. of Posts	Header Part Numbers	No. of Posts
Standard UL94V-0, Tin-Lead Plated							
644486	2-14	644861	2-14	644488	2-14	644803	2-14
Standard UL94V-0, .000030 [0.00076] Gold Plated							
644487	2-14	—	—	644489	2-14	—	—

Header Length

No. of Circuits	Dim. A	Prefix/ Suffix
2	**.284** 7.21	-2
3	**.384** 9.75	-3
4	**.484** 12.29	-4
5	**.584** 14.83	-5
6	**.684** 17.37	-6
7	**.784** 19.91	-7
8	**.884** 22.45	-8
9	**.984** 24.99	-9
10	**1.084** 27.53	1- -0
11	**1.184** 30.07	1- -1
12	**1.284** 32.61	1- -2
13	**1.384** 35.15	1- -3
14	**1.484** 37.69	1- -4

For complete product information, order Catalog 82056

Products for Industrial & Commercial Applications

Dimensions are shown for reference purposes only.

Dimensions are in inches and millimeters unless otherwise specified. Values in brackets are metric equivalents.

Specifications subject to change.

Technical Support Center
1-800-522-6752
www.tycoelectronics.com

Product Facts

- **Low cost wire-to-board interconnections**
- **Wide wire range for single contact**
- **Tin and gold plated contacts**
- **Mates with specified MTA and similar competitive notched headers**
- **Plastic latching feature in housing helps prevent contact backout**
- **Locking ramps and polarizing tabs are standard**
- **For keying purposes use keying plug 641994-1 (page 2189)**
- **Recognized under the Component Program of Underwriters Laboratories Inc., File No. E28476**
- **Certified by Canadian Standards Association, File No. LR7189**

For mateability options, see matrix on pages 2186 and 2187.

For mating half visuals, see pages 2192 thru 2195 and 2198.

Performance Data:

Voltage Rating — 250 vac

Current Rating — 4 amp max.

Low-Level Resistance — 6 mΩ max. initial; 10 mΩ max. final

Insulation Resistance — 1000 MΩ min. initial; 100 MΩ min. final

Operating Temperature — −55° C to +105° C

Technical Documents:

Product Specification
108-1948

Application Specification
114-13036

Instruction Sheet
408-8493

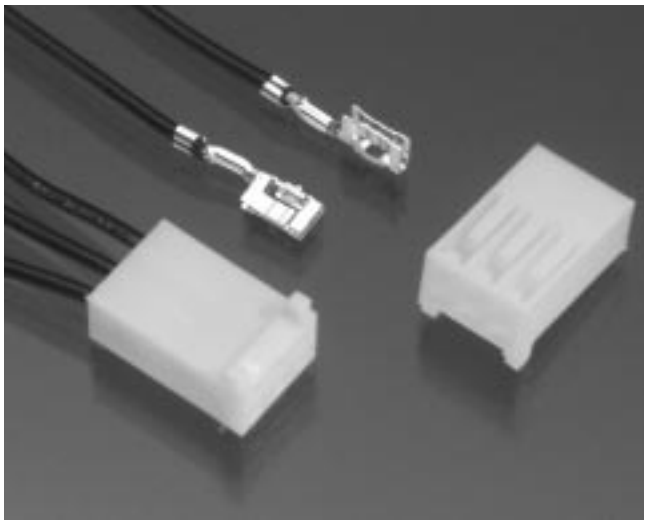

Contacts

Part Numbers		
Tin Plated	**15 Au Gold Plated**	**30 Au Gold Plated**
1375819-1 (Strip)	1375819-2 (Strip)	1375819-3 (Strip)
1445336-1 (Loose Piece)	1445336-2 (Loose Piece)	1445336-3 (Loose Piece)

Material and Finish:

Phosphor bronze, pretinned or .000015 [.00038] gold, .000030 [0.00076] gold over nickel

Wire Range — 22-26 AWG [0.35-0.13 mm²]

Max. Ins. Dia. — .065 [1.65]

Housing*

Material:

UL94V-0 rated, Nylon, white

No. of Pos.	Dim. A	Part Numbers
2	**.220** 5.59	1375820-2
3	**.320** 8.13	1375820-3
4	**.420** 10.67	1375820-4
5	**.520** 13.21	1375820-5
6	**.620** 15.75	1375820-6
7	**.720** 18.29	1375820-7
8	**.820** 20.83	1375820-8
9	**.920** 23.37	1375820-9
10	**1.020** 25.91	1-1375820-0
11	**1.120** 28.45	1-1375820-1
12	**1.220** 30.99	1-1375820-2
13	**1.320** 33.53	1-1375820-3
14	**1.420** 36.07	1-1375820-4
15	**1.520** 38.61	1-1375820-5

No. of Pos.	Dim. A	Part Numbers
16	**1.620** 41.15	1-1375820-6
17	**1.720** 43.69	1-1375820-7
18	**1.820** 46.23	1-1375820-8
19	**1.920** 48.77	1-1375820-9
20	**2.020** 51.31	2-1375820-0
21	**2.120** 53.85	2-1375820-1
22	**2.220** 56.39	2-1375820-2
23	**2.320** 58.93	2-1375820-3
24	**2.420** 61.47	2-1375820-4
25	**2.520** 64.01	2-1375820-5
26	**2.620** 66.55	2-1375820-6
27	**2.720** 69.09	2-1375820-7
28	**2.820** 71.63	2-1375820-8

Application Tooling

Loose Piece Contacts:

Hand Tool No. 58517-1 (408-4064) with Die Set No. 58517-2 (408-4064)

Strip Contacts:

AMP-O-LECTRIC Model "G" Termination Machine* Applicator No. 567373-3 (Request Catalog 65828)

AMP-O-MATIC Stripper-Crimper Machine* Applicator No. 567910-1 or 567827-1 (with CQM) (Request Catalog 65004)

AMPOMATOR CLS IIIG Lead Making Machine* (Request Catalog 82659)

*Requires applicators. For part numbers, call the Technical Support Center at **1-800-522-6752** for latest information.

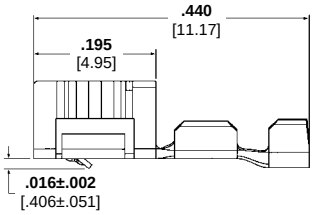

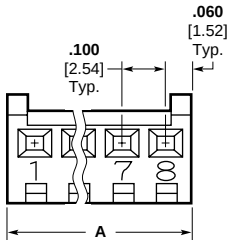

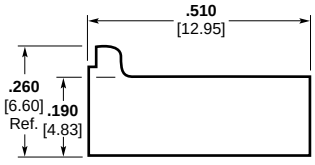

For complete product information, order Catalog 82056

Shrouded Headers — Straight and Right-Angle

Material and Finish:

Housing — UL94V-0 rated, polyester, black

Posts — Copper alloy, tin plated; or .000030 [0.00076] gold over nickel

Notes:
1. Post(s) can be omitted for keying purposes. Specify the desired post(s) to be omitted using the figure to identify Post No. 1.
2. Headers with .00015 [0.00038] gold plated post are available upon request. Minimums may apply.
3. Gold headers are duplex plated, gold on mating end of post and tin on the soldertail.

For mateability options, see matrix on pages 2186 and 2187.

For mating half visuals, see page 2197.

Header Ordering Information

The "Base Part Numbers" Chart at right shows the base part number and number of posts available for the described headers.

Prefixes and suffixes are determined by the number of post positions in the header. For example, the complete part number for a 10-position header with straight post and with pegs would be:

Base number **xxxxxx** plus prefix-and-suffix

1- — -0

The correct ordering number is

1-xxxxxx-0

Note:
CST-100 shrouded headers **only mate** with CST-100 housings. All the MTA-100 headers except the MTA-100 shrouded headers mate with CST-100 II housings.

Straight Post (.025 [0.64] Square)

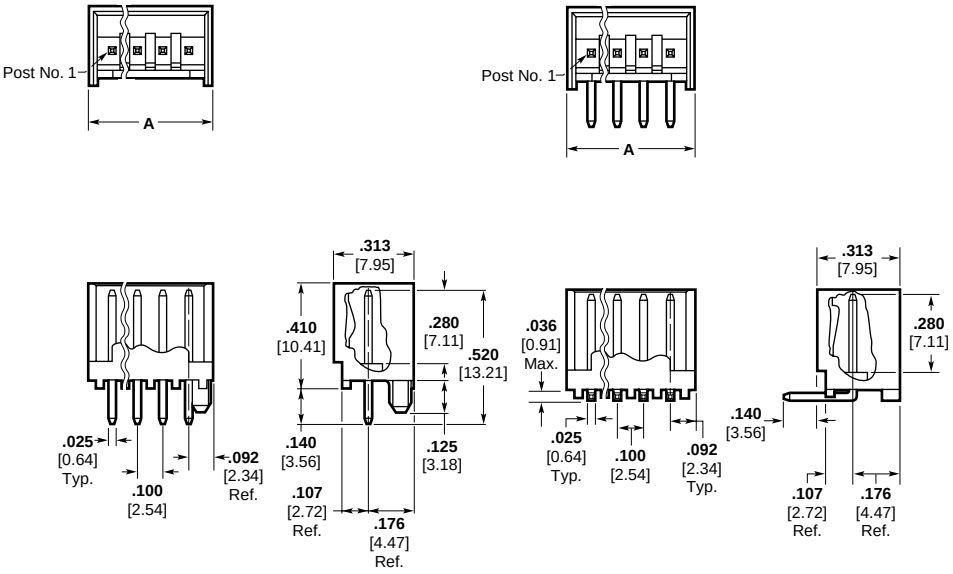

Right-Angle Post (.025 [0.64] Square)

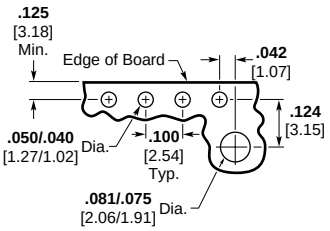

Recommended Mounting Hole Size for .062 [1.57] Thk. PC Board
(Solder Side of Board Shown)



Polarized Retention Peg

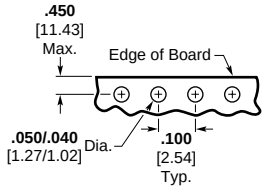

Recommended Mounting Hole Size for .062 [1.57] Thk. PC Board
(Solder Side of Board Shown)

Note: Consult Product Drawing for details on placing headers onto pc boards.

Base Part Numbers

Straight Posts				Right-Angle Posts Without Pegs Only	
With Pegs		Without Pegs			
Header Part Numbers	No. of Posts	Header Part Numbers	No. of Posts	Header Part Numbers	No. of Posts
Standard UL94V-0, Tin Plated					
644893	2-14	644892	2-14	644894	2-14
Standard UL94V-0, .000030 [0.00076] Gold Plated					
644897	2-14	644896	2-14	644898	2-14

Header Length

No. of Circuits	Dim. A	Prefix/ Suffix	No. of Circuits	Dim. A	Prefix/ Suffix	No. of Circuits	Dim. A	Prefix/ Suffix
2	**.284** 7.21	-2	5	**.584** 14.83	-5	8	**.884** 22.45	-8
3	**.384** 9.75	-3	6	**.684** 17.37	-6	9	**.984** 24.99	-9
4	**.484** 12.29	-4	7	**.784** 19.91	-7	10	**1.084** 27.53	1- -0

For complete product information, order Catalog 82056

Products for Industrial & Commercial Applications
Dimensions are shown for reference purposes only.
Dimensions are in inches and millimeters unless otherwise specified. Values in brackets are metric equivalents.
Specifications subject to change.
Technical Support Center 1-800-522-6752 www.tycoelectronics.com

Product Facts

- **Connectors and headers for 2 through 24 positions; wire sizes of 18, 20, 22, 24 and 26 AWG [0.9–0.12 mm²]**
- **Connectors and headers, except shrouded headers, are end-to-end stackable**
- **QUAD Connectors for higher current rating**
- **Posted connectors for 2, 3, 4, 6, 9, 12, 15 and 24 positions**
- **Card edge connectors for 3, 6, 9, 12, 15, 18 and 20 through 24 positions**
- **Connectors preloaded with IDC contacts**
- **All contacts are slotted for insulation displacement (IDC) termination technique**
- **Connector styles include both closed end and feed-thru, with and without locking ramps and polarizing tabs**
- **Polarizing tabs do not allow reverse mating**
- **Contacts are lubricated to prevent fretting corrosion**
- **Benefits derived from the MTA-156 system include increases quality and ease of handling such as—**
  - **One-step assembly**
  - **No wire stripping**
  - **No contact damage**
  - **Reduced wiring errors**
  - **Simpler tooling**
  - **Simple maintenance and repair**
- **Meets the material requirements of Table 23.1 of UL 1410 Standards for Tele-vision Receiver and Video Products (wire-to-post connectors only)**
- **Recognized under the Component Program of Underwriters Laboratories Inc., File No. E28476**
- **Certified by Canadian Standards Association, File No. LR7189**

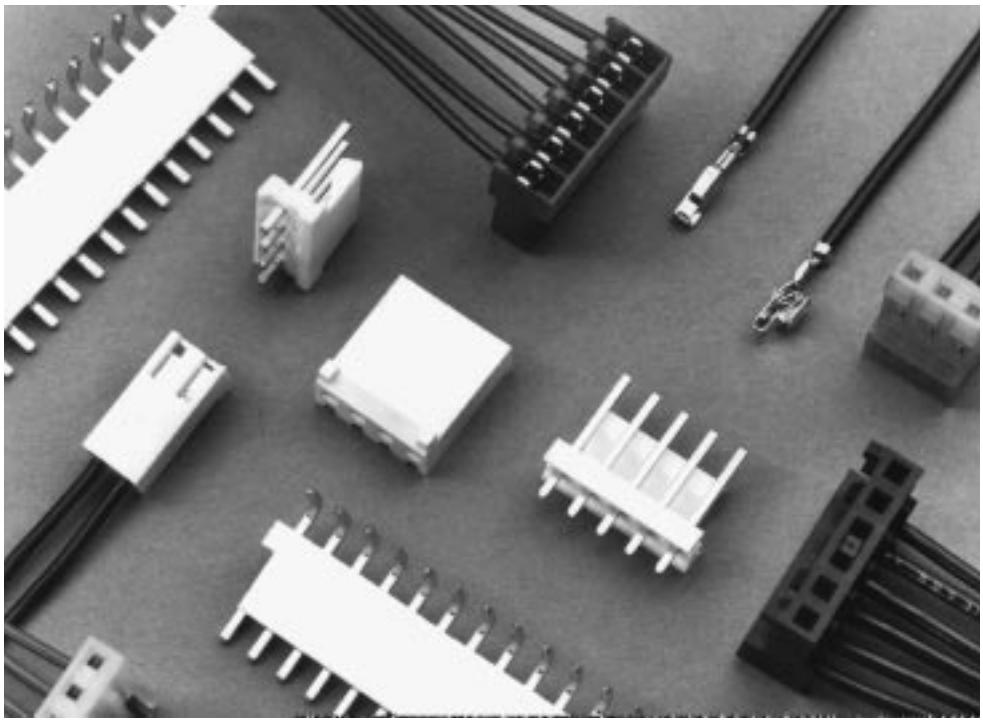

MTA-156 connectors accept discrete and ribbon cable wire sizes ranging from 18–26 AWG [0.9–0.12 mm²] with maximum insulation outside diameter.095 [2.41] for single wire and .070 [1.78] for mass termination of wires. Tin plated solid or fused stranded wire may be used with any wire gauge. Stranded (7, 16, and 19 strands) wire with PVC insulation can be used on 18 AWG [0.8–0.9 mm²] MTA-156 connectors; 7, 10, and 19 stranded wire on 20 AWG [0.5–0.6 mm²] MTA-156 connectors; and 7 and 19 stranded wire on 22–26 AWG [0.4–0.12 mm²] MTA-156 connectors.

Only one wire to be terminated into an IDC contact slot.

Mass termination of wire provides the lowest applied cost because it drastically reduces the labor content of virtually any cable or harness assembly required.

The wire-to-post connector housing material is flame retardant thermoplastic, either UL94V-2 or UL94V-0 rated.

A full line of .156 [3.96] centerline headers completes the system. Headers are available with straight or right-angle posts, in flat, friction lock and shrouded styles. Headers are available in 2 through 24 positions, except shrouded. Shrouded headers are available in 2-12 positions.

Note: Refer to page 2219 for approved wire listings.

Performance Data*:

Voltage Rating—600 vac

Current Rating—
7 amp max. for MTA-156 Connector

Low-Level Resistance—
3.0 mΩ max. initial

Dielectric Withstanding Voltage—
1250 vac/1 min.

Insulation Resistance—
5000 MΩ min. initial

Operating Temperature—
−55° C to +105° C

*Refer to the Product Specification for additional electrical, mechanical and environmental performance tests and requirements.

Technical Documents:

Product Specification
108-1051 MTA-156 Connectors

Application Specifications
114-1020 MTA-156 Connectors, Posted Connectors and Card Edge Connectors
114-1032 MTA-156 Ribbon Cable Assembly

Connectors

This matrix has been prepared to assist you, our customer, in defining the correct mating halves for the MTA-156 header and connector combination. Where a "Y" is indicated the combination is a valid mating pair. Where an "N" is indicated the combination is not acceptable for mating.

Headers	640383	640384	640385	640387	640388	640389	640445	644611	644612	644613	644614	644615	644616	644617	644749	644750	644751	644752	644753	644754	644755	647123	647124	647125	647126	647127	647128	647129	647130	647210	647211	647212	647227	647228	647229	647230
640426	Y	Y	Y	N	Y	Y	Y	Y	Y	Y	N	Y	Y	Y	Y	Y	Y	Y	Y	Y	N	Y	Y	Y	Y	Y	Y	Y	Y	Y	Y	N	Y	Y	Y	N
640427	Y	Y	Y	N	Y	Y	Y	Y	Y	Y	N	Y	Y	Y	Y	Y	Y	Y	Y	Y	N	Y	Y	Y	Y	Y	Y	Y	Y	Y	Y	N	Y	Y	Y	N
640428	Y	Y	Y	N	Y	Y	Y	Y	Y	Y	N	Y	Y	Y	Y	Y	Y	Y	Y	Y	N	Y	Y	Y	Y	Y	Y	Y	Y	Y	Y	N	Y	Y	Y	N
640429	Y	Y	Y	N	Y	Y	Y	Y	Y	Y	N	Y	Y	Y	Y	Y	Y	Y	Y	Y	N	Y	Y	Y	Y	Y	Y	Y	Y	Y	Y	N	Y	Y	Y	N
640430	Y	Y	Y	N	Y	Y	Y	Y	Y	Y	N	Y	Y	Y	Y	Y	Y	Y	Y	Y	N	Y	Y	Y	Y	Y	Y	Y	Y	Y	Y	N	Y	Y	Y	N
640431	Y	Y	Y	Y	Y	Y	Y	Y	Y	Y	Y	Y	Y	Y	Y	Y	Y	Y	Y	Y	Y	Y	Y	Y	Y	Y	Y	Y	Y	Y	Y	Y	Y	Y	Y	Y
640432	Y	Y	Y	Y	Y	Y	Y	Y	Y	Y	Y	Y	Y	Y	Y	Y	Y	Y	Y	Y	Y	Y	Y	Y	Y	Y	Y	Y	Y	Y	Y	Y	Y	Y	Y	Y
640433	Y	Y	Y	Y	Y	Y	Y	Y	Y	Y	Y	Y	Y	Y	Y	Y	Y	Y	Y	Y	Y	Y	Y	Y	Y	Y	Y	Y	Y	Y	Y	Y	Y	Y	Y	Y
640434	Y	Y	Y	Y	Y	Y	Y	Y	Y	Y	Y	Y	Y	Y	Y	Y	Y	Y	Y	Y	Y	Y	Y	Y	Y	Y	Y	Y	Y	Y	Y	Y	Y	Y	Y	Y
640435	Y	Y	Y	Y	Y	Y	Y	Y	Y	Y	Y	Y	Y	Y	Y	Y	Y	Y	Y	Y	Y	Y	Y	Y	Y	Y	Y	Y	Y	Y	Y	Y	Y	Y	Y	Y
640472	Y	Y	Y	N	Y	Y	Y	Y	Y	N	Y	Y	Y	Y	Y	Y	Y	Y	Y	Y	N	Y	Y	Y	Y	Y	Y	Y	Y	Y	Y	N	Y	Y	Y	N
640473	Y	Y	Y	N	Y	Y	Y	Y	Y	N	Y	Y	Y	Y	Y	Y	Y	Y	Y	Y	N	Y	Y	Y	Y	Y	Y	Y	Y	Y	Y	N	Y	Y	Y	N
640474	Y	Y	Y	N	Y	Y	Y	Y	Y	N	Y	Y	Y	Y	Y	Y	Y	Y	Y	Y	N	Y	Y	Y	Y	Y	Y	Y	Y	Y	Y	N	Y	Y	Y	N
640475	Y	Y	Y	N	Y	Y	Y	Y	Y	N	Y	Y	Y	Y	Y	Y	Y	Y	Y	Y	N	Y	Y	Y	Y	Y	Y	Y	Y	Y	Y	N	Y	Y	Y	N
640476	Y	Y	Y	N	Y	Y	Y	Y	Y	N	Y	Y	Y	Y	Y	Y	Y	Y	Y	Y	N	Y	Y	Y	Y	Y	Y	Y	Y	Y	Y	N	Y	Y	Y	N
640477	Y	Y	Y	Y	Y	Y	Y	Y	Y	Y	Y	Y	Y	Y	Y	Y	Y	Y	Y	Y	Y	Y	Y	Y	Y	Y	Y	Y	Y	Y	Y	Y	Y	Y	Y	Y
640478	Y	Y	Y	Y	Y	Y	Y	Y	Y	Y	Y	Y	Y	Y	Y	Y	Y	Y	Y	Y	Y	Y	Y	Y	Y	Y	Y	Y	Y	Y	Y	Y	Y	Y	Y	Y
640479	Y	Y	Y	Y	Y	Y	Y	Y	Y	Y	Y	Y	Y	Y	Y	Y	Y	Y	Y	Y	Y	Y	Y	Y	Y	Y	Y	Y	Y	Y	Y	Y	Y	Y	Y	Y
640480	Y	Y	Y	Y	Y	Y	Y	Y	Y	Y	Y	Y	Y	Y	Y	Y	Y	Y	Y	Y	Y	Y	Y	Y	Y	Y	Y	Y	Y	Y	Y	Y	Y	Y	Y	Y
640481	Y	Y	Y	Y	Y	Y	Y	Y	Y	Y	Y	Y	Y	Y	Y	Y	Y	Y	Y	Y	Y	Y	Y	Y	Y	Y	Y	Y	Y	Y	Y	Y	Y	Y	Y	Y
640595	Y	Y	Y	N	Y	Y	Y	Y	Y	N	Y	Y	Y	Y	Y	Y	Y	Y	Y	Y	N	Y	Y	Y	Y	Y	Y	Y	Y	Y	Y	N	Y	Y	Y	N
640599	Y	Y	Y	N	Y	Y	Y	Y	Y	N	Y	Y	Y	Y	Y	Y	Y	Y	Y	Y	N	Y	Y	Y	Y	Y	Y	Y	Y	Y	Y	N	Y	Y	Y	N
640600	Y	Y	Y	N	Y	Y	Y	Y	Y	N	Y	Y	Y	Y	Y	Y	Y	Y	Y	Y	N	Y	Y	Y	Y	Y	Y	Y	Y	Y	Y	N	Y	Y	Y	N
640601	Y	Y	Y	N	Y	Y	Y	Y	Y	N	Y	Y	Y	Y	Y	Y	Y	Y	Y	Y	N	Y	Y	Y	Y	Y	Y	Y	Y	Y	Y	N	Y	Y	Y	N
640602	Y	Y	Y	N	Y	Y	Y	Y	Y	N	Y	Y	Y	Y	Y	Y	Y	Y	Y	Y	N	Y	Y	Y	Y	Y	Y	Y	Y	Y	Y	N	Y	Y	Y	N
640604	Y	Y	Y	Y	Y	Y	Y	Y	Y	Y	Y	Y	Y	Y	Y	Y	Y	Y	Y	Y	Y	Y	Y	Y	Y	Y	Y	Y	Y	Y	Y	Y	Y	Y	Y	Y
640605	Y	Y	Y	Y	Y	Y	Y	Y	Y	Y	Y	Y	Y	Y	Y	Y	Y	Y	Y	Y	Y	Y	Y	Y	Y	Y	Y	Y	Y	Y	Y	Y	Y	Y	Y	Y
640606	Y	Y	Y	Y	Y	Y	Y	Y	Y	Y	Y	Y	Y	Y	Y	Y	Y	Y	Y	Y	Y	Y	Y	Y	Y	Y	Y	Y	Y	Y	Y	Y	Y	Y	Y	Y
640607	Y	Y	Y	Y	Y	Y	Y	Y	Y	Y	Y	Y	Y	Y	Y	Y	Y	Y	Y	Y	Y	Y	Y	Y	Y	Y	Y	Y	Y	Y	Y	Y	Y	Y	Y	Y
640608	Y	Y	Y	Y	Y	Y	Y	Y	Y	Y	Y	Y	Y	Y	Y	Y	Y	Y	Y	Y	Y	Y	Y	Y	Y	Y	Y	Y	Y	Y	Y	Y	Y	Y	Y	Y
641301	Y	Y	Y	N	Y	Y	Y	Y	Y	N	Y	Y	Y	Y	Y	Y	Y	Y	Y	Y	N	Y	Y	Y	Y	Y	Y	Y	Y	Y	Y	N	Y	Y	Y	N
641302	Y	Y	Y	N	Y	Y	Y	Y	Y	N	Y	Y	Y	Y	Y	Y	Y	Y	Y	Y	N	Y	Y	Y	Y	Y	Y	Y	Y	Y	Y	N	Y	Y	Y	N
641303	Y	Y	Y	N	Y	Y	Y	Y	Y	N	Y	Y	Y	Y	Y	Y	Y	Y	Y	Y	N	Y	Y	Y	Y	Y	Y	Y	Y	Y	Y	N	Y	Y	Y	N
641304	Y	Y	Y	N	Y	Y	Y	Y	Y	N	Y	Y	Y	Y	Y	Y	Y	Y	Y	Y	N	Y	Y	Y	Y	Y	Y	Y	Y	Y	Y	N	Y	Y	Y	N
641305	Y	Y	Y	N	Y	Y	Y	Y	Y	N	Y	Y	Y	Y	Y	Y	Y	Y	Y	Y	N	Y	Y	Y	Y	Y	Y	Y	Y	Y	Y	N	Y	Y	Y	N
641306	Y	Y	Y	Y	Y	Y	Y	Y	Y	Y	Y	Y	Y	Y	Y	Y	Y	Y	Y	Y	Y	Y	Y	Y	Y	Y	Y	Y	Y	Y	Y	Y	Y	Y	Y	Y
641307	Y	Y	Y	Y	Y	Y	Y	Y	Y	Y	Y	Y	Y	Y	Y	Y	Y	Y	Y	Y	Y	Y	Y	Y	Y	Y	Y	Y	Y	Y	Y	Y	Y	Y	Y	Y
641308	Y	Y	Y	Y	Y	Y	Y	Y	Y	Y	Y	Y	Y	Y	Y	Y	Y	Y	Y	Y	Y	Y	Y	Y	Y	Y	Y	Y	Y	Y	Y	Y	Y	Y	Y	Y
641309	Y	Y	Y	Y	Y	Y	Y	Y	Y	Y	Y	Y	Y	Y	Y	Y	Y	Y	Y	Y	Y	Y	Y	Y	Y	Y	Y	Y	Y	Y	Y	Y	Y	Y	Y	Y
641310	Y	Y	Y	Y	Y	Y	Y	Y	Y	Y	Y	Y	Y	Y	Y	Y	Y	Y	Y	Y	Y	Y	Y	Y	Y	Y	Y	Y	Y	Y	Y	Y	Y	Y	Y	Y
643817	Y	Y	Y	N	Y	Y	Y	Y	Y	N	Y	Y	Y	Y	Y	Y	Y	Y	Y	Y	N	Y	Y	Y	Y	Y	Y	Y	Y	Y	Y	N	Y	Y	Y	N
643818	Y	Y	Y	N	Y	Y	Y	Y	Y	N	Y	Y	Y	Y	Y	Y	Y	Y	Y	Y	N	Y	Y	Y	Y	Y	Y	Y	Y	Y	Y	N	Y	Y	Y	N
643819	Y	Y	Y	N	Y	Y	Y	Y	Y	N	Y	Y	Y	Y	Y	Y	Y	Y	Y	Y	N	Y	Y	Y	Y	Y	Y	Y	Y	Y	Y	N	Y	Y	Y	N
643820	Y	Y	Y	N	Y	Y	Y	Y	Y	N	Y	Y	Y	Y	Y	Y	Y	Y	Y	Y	N	Y	Y	Y	Y	Y	Y	Y	Y	Y	Y	N	Y	Y	Y	N
643821	Y	Y	Y	N	Y	Y	Y	Y	Y	N	Y	Y	Y	Y	Y	Y	Y	Y	Y	Y	N	Y	Y	Y	Y	Y	Y	Y	Y	Y	Y	N	Y	Y	Y	N
644082	Y	Y	Y	Y	Y	Y	Y	Y	Y	Y	Y	Y	Y	Y	Y	Y	Y	Y	Y	Y	Y	Y	Y	Y	Y	Y	Y	Y	Y	Y	Y	Y	Y	Y	Y	Y
644461	Y	Y	Y	Y	Y	Y	Y	Y	Y	Y	Y	Y	Y	Y	Y	Y	Y	Y	Y	Y	Y	Y	Y	Y	Y	Y	Y	Y	Y	Y	Y	Y	Y	Y	Y	Y
644462	Y	Y	Y	Y	Y	Y	Y	Y	Y	Y	Y	Y	Y	Y	Y	Y	Y	Y	Y	Y	Y	Y	Y	Y	Y	Y	Y	Y	Y	Y	Y	Y	Y	Y	Y	Y
644463	Y	Y	Y	Y	Y	Y	Y	Y	Y	Y	Y	Y	Y	Y	Y	Y	Y	Y	Y	Y	Y	Y	Y	Y	Y	Y	Y	Y	Y	Y	Y	Y	Y	Y	Y	Y
644464	Y	Y	Y	Y	Y	Y	Y	Y	Y	Y	Y	Y	Y	Y	Y	Y	Y	Y	Y	Y	Y	Y	Y	Y	Y	Y	Y	Y	Y	Y	Y	Y	Y	Y	Y	Y
644465	Y	Y	Y	N	Y	Y	Y	Y	Y	N	Y	Y	Y	Y	Y	Y	Y	Y	Y	Y	N	Y	Y	Y	Y	Y	Y	Y	Y	Y	Y	N	Y	Y	Y	N
644466	Y	Y	Y	N	Y	Y	Y	Y	Y	N	Y	Y	Y	Y	Y	Y	Y	Y	Y	Y	N	Y	Y	Y	Y	Y	Y	Y	Y	Y	Y	N	Y	Y	Y	N
644467	Y	Y	Y	N	Y	Y	Y	Y	Y	N	Y	Y	Y	Y	Y	Y	Y	Y	Y	Y	N	Y	Y	Y	Y	Y	Y	Y	Y	Y	Y	N	Y	Y	Y	N
644468	Y	Y	Y	N	Y	Y	Y	Y	Y	N	Y	Y	Y	Y	Y	Y	Y	Y	Y	Y	N	Y	Y	Y	Y	Y	Y	Y	Y	Y	Y	N	Y	Y	Y	N
644469	Y	Y	Y	Y	Y	Y	Y	Y	Y	Y	Y	Y	Y	Y	Y	Y	Y	Y	Y	Y	Y	Y	Y	Y	Y	Y	Y	Y	Y	Y	Y	Y	Y	Y	Y	Y
644470	Y	Y	Y	Y	Y	Y	Y	Y	Y	Y	Y	Y	Y	Y	Y	Y	Y	Y	Y	Y	Y	Y	Y	Y	Y	Y	Y	Y	Y	Y	Y	Y	Y	Y	Y	Y
644471	Y	Y	Y	Y	Y	Y	Y	Y	Y	Y	Y	Y	Y	Y	Y	Y	Y	Y	Y	Y	Y	Y	Y	Y	Y	Y	Y	Y	Y	Y	Y	Y	Y	Y	Y	Y
644472	Y	Y	Y	Y	Y	Y	Y	Y	Y	Y	Y	Y	Y	Y	Y	Y	Y	Y	Y	Y	Y	Y	Y	Y	Y	Y	Y	Y	Y	Y	Y	Y	Y	Y	Y	Y
644501	Y	Y	Y	Y	Y	Y	Y	Y	Y	Y	Y	Y	Y	Y	Y	Y	Y	Y	Y	Y	Y	Y	Y	Y	Y	Y	Y	Y	Y	Y	Y	Y	Y	Y	Y	Y
644502	Y	Y	Y	Y	Y	Y	Y	Y	Y	Y	Y	Y	Y	Y	Y	Y	Y	Y	Y	Y	Y	Y	Y	Y	Y	Y	Y	Y	Y	Y	Y	Y	Y	Y	Y	Y
644566	Y	Y	Y	Y	Y	Y	Y	Y	Y	Y	Y	Y	Y	Y	Y	Y	Y	Y	Y	Y	Y	Y	Y	Y	Y	Y	Y	Y	Y	Y	Y	Y	Y	Y	Y	Y
644567	Y	Y	Y	Y	Y	Y	Y	Y	Y	Y	Y	Y	Y	Y	Y	Y	Y	Y	Y	Y	Y	Y	Y	Y	Y	Y	Y	Y	Y	Y	Y	Y	Y	Y	Y	Y
644569	Y	Y	Y	Y	Y	Y	Y	Y	Y	Y	Y	Y	Y	Y	Y	Y	Y	Y	Y	Y	Y	Y	Y	Y	Y	Y	Y	Y	Y	Y	Y	Y	Y	Y	Y	Y
644570	Y	Y	Y	Y	Y	Y	Y	Y	Y	Y	Y	Y	Y	Y	Y	Y	Y	Y	Y	Y	Y	Y	Y	Y	Y	Y	Y	Y	Y	Y	Y	Y	Y	Y	Y	Y
644572	Y	Y	Y	Y	Y	Y	Y	Y	Y	Y	Y	Y	Y	Y	Y	Y	Y	Y	Y	Y	Y	Y	Y	Y	Y	Y	Y	Y	Y	Y	Y	Y	Y	Y	Y	Y
644783	Y	Y	Y	N	Y	Y	Y	Y	Y	N	Y	Y	Y	Y	Y	Y	Y	Y	Y	Y	N	Y	Y	Y	Y	Y	Y	Y	Y	Y	Y	N	Y	Y	Y	N
644791	Y	Y	Y	Y	Y	Y	Y	Y	Y	Y	Y	Y	Y	Y	Y	Y	Y	Y	Y	Y	Y	Y	Y	Y	Y	Y	Y	Y	Y	Y	Y	Y	Y	Y	Y	Y
644860	Y	Y	Y	N	Y	Y	Y	Y	Y	N	Y	Y	Y	Y	Y	Y	Y	Y	Y	Y	N	Y	Y	Y	Y	Y	Y	Y	Y	Y	Y	N	Y	Y	Y	N
644878	Y	Y	Y	N	Y	Y	Y	Y	Y	N	Y	Y	Y	Y	Y	Y	Y	Y	Y	Y	N	Y	Y	Y	Y	Y	Y	Y	Y	Y	Y	N	Y	Y	Y	N

Products for Industrial & Commercial Applications

Dimensions are shown for reference purposes only.

Dimensions are in inches and millimeters unless otherwise specified. Values in brackets are metric equivalents.

Specifications subject to change.

Technical Support Center
1-800-522-6752
www.tycoelectronics.com

Matrix for Gold Plated Part Numbers

Matrix for .000030 [0.00076] Gold Plated Part Numbers

This matrix has been prepared to assist you, our customer, in defining the correct mating halves for the MTA-156 header and connector combination. Where a "Y" is indicated the combination is a valid mating pair. Where an "N" is indicated the combination is not acceptable for mating.

Headers

Connectors

	641202	641203	641204	641207	641208	641209	641210	644627	644628	644629	644630	644631	644632	644633	644756	644757	644758	644759	644760	644761	644762	647131	647132	647133	647134	647135	647136	647137	647138	647192	647193	647194	647195	647196	647197	647198	647213	647214	647215	647216	647217	647218	647219	647231	647232	647233	647234
641217	Y	Y	Y	N	Y	Y	Y	Y	Y	Y	N	Y	Y	Y	Y	Y	Y	Y	Y	Y	N	Y	Y	Y	Y	Y	Y	Y	Y	Y	Y	Y	Y	Y	Y	N	Y	Y	Y	Y	Y	N	Y	Y	Y	N
641218	Y	Y	Y	N	Y	Y	Y	Y	Y	Y	N	Y	Y	Y	Y	Y	Y	Y	Y	Y	N	Y	Y	Y	Y	Y	Y	Y	Y	Y	Y	Y	Y	Y	Y	N	Y	Y	Y	Y	Y	N	Y	Y	Y	N
641219	Y	Y	Y	N	Y	Y	Y	Y	Y	Y	N	Y	Y	Y	Y	Y	Y	Y	Y	Y	N	Y	Y	Y	Y	Y	Y	Y	Y	Y	Y	Y	Y	Y	Y	N	Y	Y	Y	Y	Y	N	Y	Y	Y	N
641220	Y	Y	Y	N	Y	Y	Y	Y	Y	Y	N	Y	Y	Y	Y	Y	Y	Y	Y	Y	N	Y	Y	Y	Y	Y	Y	Y	Y	Y	Y	Y	Y	Y	Y	N	Y	Y	Y	Y	Y	N	Y	Y	Y	N
641221	Y	Y	Y	N	Y	Y	Y	Y	Y	Y	N	Y	Y	Y	Y	Y	Y	Y	Y	Y	N	Y	Y	Y	Y	Y	Y	Y	Y	Y	Y	Y	Y	Y	Y	N	Y	Y	Y	Y	Y	N	Y	Y	Y	N
641222	Y	Y	Y	Y	Y	Y	Y	Y	Y	Y	Y	Y	Y	Y	Y	Y	Y	Y	Y	Y	Y	Y	Y	Y	Y	Y	Y	Y	Y	Y	Y	Y	Y	Y	Y	Y	Y	Y	Y	Y	Y	Y	Y	Y	Y	Y	Y
641223	Y	Y	Y	Y	Y	Y	Y	Y	Y	Y	Y	Y	Y	Y	Y	Y	Y	Y	Y	Y	Y	Y	Y	Y	Y	Y	Y	Y	Y	Y	Y	Y	Y	Y	Y	Y	Y	Y	Y	Y	Y	Y	Y	Y	Y	Y	Y
641224	Y	Y	Y	Y	Y	Y	Y	Y	Y	Y	Y	Y	Y	Y	Y	Y	Y	Y	Y	Y	Y	Y	Y	Y	Y	Y	Y	Y	Y	Y	Y	Y	Y	Y	Y	Y	Y	Y	Y	Y	Y	Y	Y	Y	Y	Y	Y
641225	Y	Y	Y	Y	Y	Y	Y	Y	Y	Y	Y	Y	Y	Y	Y	Y	Y	Y	Y	Y	Y	Y	Y	Y	Y	Y	Y	Y	Y	Y	Y	Y	Y	Y	Y	Y	Y	Y	Y	Y	Y	Y	Y	Y	Y	Y	Y
641226	Y	Y	Y	Y	Y	Y	Y	Y	Y	Y	Y	Y	Y	Y	Y	Y	Y	Y	Y	Y	Y	Y	Y	Y	Y	Y	Y	Y	Y	Y	Y	Y	Y	Y	Y	Y	Y	Y	Y	Y	Y	Y	Y	Y	Y	Y	Y
641227	Y	Y	Y	N	Y	Y	Y	Y	Y	Y	N	Y	Y	Y	Y	Y	Y	Y	Y	Y	N	Y	Y	Y	Y	Y	Y	Y	Y	Y	Y	Y	Y	Y	Y	N	Y	Y	Y	Y	Y	N	Y	Y	Y	N
641228	Y	Y	Y	N	Y	Y	Y	Y	Y	Y	N	Y	Y	Y	Y	Y	Y	Y	Y	Y	N	Y	Y	Y	Y	Y	Y	Y	Y	Y	Y	Y	Y	Y	Y	N	Y	Y	Y	Y	Y	N	Y	Y	Y	N
641229	Y	Y	Y	N	Y	Y	Y	Y	Y	Y	N	Y	Y	Y	Y	Y	Y	Y	Y	Y	N	Y	Y	Y	Y	Y	Y	Y	Y	Y	Y	Y	Y	Y	Y	N	Y	Y	Y	Y	Y	N	Y	Y	Y	N
641230	Y	Y	Y	N	Y	Y	Y	Y	Y	Y	N	Y	Y	Y	Y	Y	Y	Y	Y	Y	N	Y	Y	Y	Y	Y	Y	Y	Y	Y	Y	Y	Y	Y	Y	N	Y	Y	Y	Y	Y	N	Y	Y	Y	N
641231	Y	Y	Y	N	Y	Y	Y	Y	Y	Y	N	Y	Y	Y	Y	Y	Y	Y	Y	Y	N	Y	Y	Y	Y	Y	Y	Y	Y	Y	Y	Y	Y	Y	Y	N	Y	Y	Y	Y	Y	N	Y	Y	Y	N
641232	Y	Y	Y	Y	Y	Y	Y	Y	Y	Y	Y	Y	Y	Y	Y	Y	Y	Y	Y	Y	Y	Y	Y	Y	Y	Y	Y	Y	Y	Y	Y	Y	Y	Y	Y	Y	Y	Y	Y	Y	Y	Y	Y	Y	Y	Y	Y
641233	Y	Y	Y	Y	Y	Y	Y	Y	Y	Y	Y	Y	Y	Y	Y	Y	Y	Y	Y	Y	Y	Y	Y	Y	Y	Y	Y	Y	Y	Y	Y	Y	Y	Y	Y	Y	Y	Y	Y	Y	Y	Y	Y	Y	Y	Y	Y
641234	Y	Y	Y	Y	Y	Y	Y	Y	Y	Y	Y	Y	Y	Y	Y	Y	Y	Y	Y	Y	Y	Y	Y	Y	Y	Y	Y	Y	Y	Y	Y	Y	Y	Y	Y	Y	Y	Y	Y	Y	Y	Y	Y	Y	Y	Y	Y
641235	Y	Y	Y	Y	Y	Y	Y	Y	Y	Y	Y	Y	Y	Y	Y	Y	Y	Y	Y	Y	Y	Y	Y	Y	Y	Y	Y	Y	Y	Y	Y	Y	Y	Y	Y	Y	Y	Y	Y	Y	Y	Y	Y	Y	Y	Y	Y
641236	Y	Y	Y	Y	Y	Y	Y	Y	Y	Y	Y	Y	Y	Y	Y	Y	Y	Y	Y	Y	Y	Y	Y	Y	Y	Y	Y	Y	Y	Y	Y	Y	Y	Y	Y	Y	Y	Y	Y	Y	Y	Y	Y	Y	Y	Y	Y
644460	Y	Y	Y	N	Y	Y	Y	Y	Y	Y	N	Y	Y	Y	Y	Y	Y	Y	Y	Y	N	Y	Y	Y	Y	Y	Y	Y	Y	Y	Y	Y	Y	Y	Y	N	Y	Y	Y	Y	Y	N	Y	Y	Y	N
644662	Y	Y	Y	N	Y	Y	Y	Y	Y	Y	N	Y	Y	Y	Y	Y	Y	Y	Y	Y	N	Y	Y	Y	Y	Y	Y	Y	Y	Y	Y	Y	Y	Y	Y	N	Y	Y	Y	Y	Y	N	Y	Y	Y	N
644663	Y	Y	Y	N	Y	Y	Y	Y	Y	Y	N	Y	Y	Y	Y	Y	Y	Y	Y	Y	N	Y	Y	Y	Y	Y	Y	Y	Y	Y	Y	Y	Y	Y	Y	N	Y	Y	Y	Y	Y	N	Y	Y	Y	N
644687	Y	Y	Y	Y	Y	Y	Y	Y	Y	Y	Y	Y	Y	Y	Y	Y	Y	Y	Y	Y	Y	Y	Y	Y	Y	Y	Y	Y	Y	Y	Y	Y	Y	Y	Y	Y	Y	Y	Y	Y	Y	Y	Y	Y	Y	Y	Y
644718	Y	Y	Y	N	Y	Y	Y	Y	Y	Y	N	Y	Y	Y	Y	Y	Y	Y	Y	Y	N	Y	Y	Y	Y	Y	Y	Y	Y	Y	Y	Y	Y	Y	Y	N	Y	Y	Y	Y	Y	N	Y	Y	Y	N
644720	Y	Y	Y	N	Y	Y	Y	Y	Y	Y	N	Y	Y	Y	Y	Y	Y	Y	Y	Y	N	Y	Y	Y	Y	Y	Y	Y	Y	Y	Y	Y	Y	Y	Y	N	Y	Y	Y	Y	Y	N	Y	Y	Y	N

Matrix for .000015 [0.00038] Gold Plated Part Numbers

Headers

Connectors

	641113	641114	641115	641118	641119	641120	641121	644763	644764	644765	644766	644767	644768	644769	647139	647140	647141	647142	647143	647144	647145	647146	647199	647200	647201	647202	647203	647204	647205	647220	647221	647222	647223	647224	647225	647226
641148	Y	Y	Y	N	Y	Y	Y	Y	Y	Y	Y	Y	Y	N	Y	Y	Y	Y	Y	Y	Y	Y	Y	Y	Y	Y	Y	Y	N	Y	Y	Y	Y	Y	Y	N
641149	Y	Y	Y	N	Y	Y	Y	Y	Y	Y	Y	Y	Y	N	Y	Y	Y	Y	Y	Y	Y	Y	Y	Y	Y	Y	Y	Y	N	Y	Y	Y	Y	Y	Y	N
641150	Y	Y	Y	N	Y	Y	Y	Y	Y	Y	Y	Y	Y	N	Y	Y	Y	Y	Y	Y	Y	Y	Y	Y	Y	Y	Y	Y	N	Y	Y	Y	Y	Y	Y	N
641151	Y	Y	Y	N	Y	Y	Y	Y	Y	Y	Y	Y	Y	N	Y	Y	Y	Y	Y	Y	Y	Y	Y	Y	Y	Y	Y	Y	N	Y	Y	Y	Y	Y	Y	N
641152	Y	Y	Y	N	Y	Y	Y	Y	Y	Y	Y	Y	Y	N	Y	Y	Y	Y	Y	Y	Y	Y	Y	Y	Y	Y	Y	Y	N	Y	Y	Y	Y	Y	Y	N
641153	Y	Y	Y	Y	Y	Y	Y	Y	Y	Y	Y	Y	Y	Y	Y	Y	Y	Y	Y	Y	Y	Y	Y	Y	Y	Y	Y	Y	Y	Y	Y	Y	Y	Y	Y	Y
641154	Y	Y	Y	Y	Y	Y	Y	Y	Y	Y	Y	Y	Y	Y	Y	Y	Y	Y	Y	Y	Y	Y	Y	Y	Y	Y	Y	Y	Y	Y	Y	Y	Y	Y	Y	Y
641155	Y	Y	Y	Y	Y	Y	Y	Y	Y	Y	Y	Y	Y	Y	Y	Y	Y	Y	Y	Y	Y	Y	Y	Y	Y	Y	Y	Y	Y	Y	Y	Y	Y	Y	Y	Y
641156	Y	Y	Y	Y	Y	Y	Y	Y	Y	Y	Y	Y	Y	Y	Y	Y	Y	Y	Y	Y	Y	Y	Y	Y	Y	Y	Y	Y	Y	Y	Y	Y	Y	Y	Y	Y
641157	Y	Y	Y	Y	Y	Y	Y	Y	Y	Y	Y	Y	Y	Y	Y	Y	Y	Y	Y	Y	Y	Y	Y	Y	Y	Y	Y	Y	Y	Y	Y	Y	Y	Y	Y	Y
641168	Y	Y	Y	N	Y	Y	Y	Y	Y	Y	Y	Y	Y	N	Y	Y	Y	Y	Y	Y	Y	Y	Y	Y	Y	Y	Y	Y	N	Y	Y	Y	Y	Y	Y	N
641169	Y	Y	Y	N	Y	Y	Y	Y	Y	Y	Y	Y	Y	N	Y	Y	Y	Y	Y	Y	Y	Y	Y	Y	Y	Y	Y	Y	N	Y	Y	Y	Y	Y	Y	N
641170	Y	Y	Y	N	Y	Y	Y	Y	Y	Y	Y	Y	Y	N	Y	Y	Y	Y	Y	Y	Y	Y	Y	Y	Y	Y	Y	Y	N	Y	Y	Y	Y	Y	Y	N
641171	Y	Y	Y	N	Y	Y	Y	Y	Y	Y	Y	Y	Y	N	Y	Y	Y	Y	Y	Y	Y	Y	Y	Y	Y	Y	Y	Y	N	Y	Y	Y	Y	Y	Y	N
641172	Y	Y	Y	N	Y	Y	Y	Y	Y	Y	Y	Y	Y	N	Y	Y	Y	Y	Y	Y	Y	Y	Y	Y	Y	Y	Y	Y	N	Y	Y	Y	Y	Y	Y	N
641173	Y	Y	Y	Y	Y	Y	Y	Y	Y	Y	Y	Y	Y	Y	Y	Y	Y	Y	Y	Y	Y	Y	Y	Y	Y	Y	Y	Y	Y	Y	Y	Y	Y	Y	Y	Y
641174	Y	Y	Y	Y	Y	Y	Y	Y	Y	Y	Y	Y	Y	Y	Y	Y	Y	Y	Y	Y	Y	Y	Y	Y	Y	Y	Y	Y	Y	Y	Y	Y	Y	Y	Y	Y
641175	Y	Y	Y	Y	Y	Y	Y	Y	Y	Y	Y	Y	Y	Y	Y	Y	Y	Y	Y	Y	Y	Y	Y	Y	Y	Y	Y	Y	Y	Y	Y	Y	Y	Y	Y	Y
641176	Y	Y	Y	Y	Y	Y	Y	Y	Y	Y	Y	Y	Y	Y	Y	Y	Y	Y	Y	Y	Y	Y	Y	Y	Y	Y	Y	Y	Y	Y	Y	Y	Y	Y	Y	Y
641177	Y	Y	Y	Y	Y	Y	Y	Y	Y	Y	Y	Y	Y	Y	Y	Y	Y	Y	Y	Y	Y	Y	Y	Y	Y	Y	Y	Y	Y	Y	Y	Y	Y	Y	Y	Y
644284	Y	Y	Y	N	Y	Y	Y	Y	Y	Y	Y	Y	Y	N	Y	Y	Y	Y	Y	Y	Y	Y	Y	Y	Y	Y	Y	Y	N	Y	Y	Y	Y	Y	Y	N

For complete product information, order Catalog 82056

Products for Industrial & Commercial Applications

Dimensions are shown for reference purposes only.

Dimensions are in inches and millimeters unless otherwise specified. Values in brackets are metric equivalents.

Specifications subject to change.

Technical Support Center
1-800-522-6752
www.tycoelectronics.com

IDC Connectors — Closed End

Material and Finish:

Housing — UL94V-2 rated, type 6/6 or 6/12 nylon, see below for color; or UL94V-0 rated, nylon, black

Contacts — Phosphor bronze, post tin plated, .000030 [0.00076] or .000015 [.00038] post gold plated over nickel

Color Coding by Wire Size for UL94V-2 Connectors

26 AWG — Blue
24 AWG — White
22 AWG — Red
20 AWG — Yellow
18 AWG — Orange

All Wire Sizes in UL94V-0 — Black

Notes:
1. Only connectors with locking ramp and without polarizing tabs mate with posted connectors on page 2206.
2. Refer to page 2219 for approved wire listing.
3. For strain reliefs and dust covers, see page 2204.
4. For keying plugs and panel mount end caps, see page 2205.
5. Other circuit sizes are available upon request. Minimums may apply.
6. Connector circuits can be molded closed for keying purposes. Minimums may apply.
7. Where no part numbers appear in the chart, parts can be made available upon request. Minimums may apply.
8. To determine connector overall length (Dim. A), multiply .156 x the number of circuits. Example: .156 x 10 circuits equals 1.560 inches [39.62 mm].

Connector Ordering Information

The "Base Part Numbers" Chart at right shows the base part number and number of circuits available for the described connectors.

Prefixes and suffixes are determined by the number of circuit positions in the connector. For example, the complete part number for a 10-position closed end connector with locking ramp and without polarizing tabs for 18 AWG wire would be:

Base number **xxxxxx** plus prefix-and-suffix

1- — -0

The correct ordering number is

1-xxxxxx-0

Base Part Numbers

Connector Type & Wire Size	Closed End with Locking Ramp				Closed End without Locking Ramp			
	Without Tabs		With Tabs		Without Tabs		With Tabs	
	Connector Part Numbers	No. of Circuits	Connector Part Numbers	No. of Circuits	Connector Part Numbers	No. of Circuits	Connector Part Numbers	No. of Circuits
Standard UL94V-2, Tin Plated								
18 AWG 0.8-0.9 mm²	640426	2–24	643817	2–24	640431	2–24	644461[5]	2–14
20 AWG 0.5-0.6 mm²	640427	2–24	643818	2–24	640432	2–24	644462[5]	2–14
22 AWG 0.3-0.4 mm²	640428	2–24	643819	2–24	640433	2–24	644463[5]	2–14
Standard UL94V-2, .000030 [0.00076] Gold Plated								
18 AWG 0.8-0.9 mm²	641217	2–24	644460[5]	2-12	641222	2–24	—	—
20 AWG 0.5-0.6 mm²	641218	2–24	644663[5]	2-12	641223	2–24	—	—
22 AWG 0.3-0.4 mm²	641219	2–24	644662[5]	2-12	641224	2-24	644687[5]	2-14
24 AWG 0.2 mm²	641220	2–24	—	—	641225	2–24	—	—
26 AWG 0.12-0.15 mm²	641221	2–24	—	—	641226	2–24	—	—
Standard UL94V-2, .000015 [0.00038] Gold Plated								
18 AWG 0.8-0.9 mm²	641148	2–24	644284[5]	2-12	641153	2–24	—	—
22 AWG 0.3-0.4 mm²	641150	2–24	—	—	641155	2-24	—	—

[5] Other circuit sizes are available upon request. Minimums may apply.
[6] With High Force contacts

Note: Blocked circuit configurations are available upon request. Contact product engineer or product manager for details. Minimums may apply.

Closed End with Locking Ramp

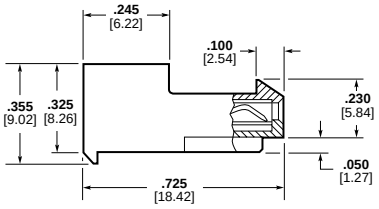

without Polarizing Tabs

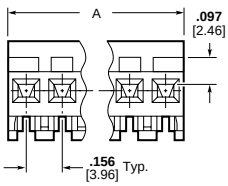

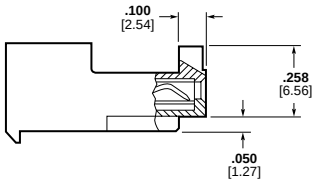

with Polarizing Tabs

Closed End without Locking Ramp

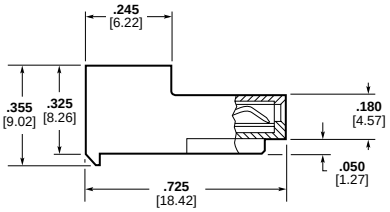

without Polarizing Tabs

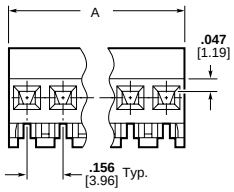

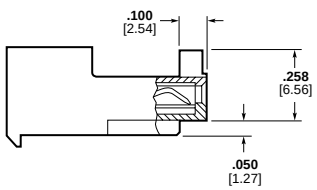

with Polarizing Tabs

Mating half visuals for Closed End Connectors with Locking Ramp, see pages 2206 thru 2211 (2208 and 2209 Front Bend Headers Only).

Mating half visuals for Closed End Connectors without Locking Ramp, see pages 2207 thru 2211.

For mateability options, see matrix on pages 2200 and 2201.

For complete product information, order Catalog 82056

Products for Industrial & Commercial Applications
Dimensions are shown for reference purposes only.
Dimensions are in inches and millimeters unless otherwise specified. Values in brackets are metric equivalents.
Specifications subject to change.
Technical Support Center 1-800-522-6752 www.tycoelectronics.com

IDC Connectors — Feed-Thru

Material and Finish:

Housing — UL94V-2 rated, type 6/6 or 6/12 nylon, see below for color; or UL94V-0 rated, nylon, black

Contacts — Phosphor bronze; post tin plated, .000030 [.00076] or .000015 [.00038] post gold plated over nickel

Color Coding by Wire Size for UL94V-2 Connectors

26 AWG — Blue
24 AWG — White
22 AWG — Red
20 AWG — Yellow
18 AWG — Orange

All Wire Sizes in UL94V-0 — Black

Notes:
1. Only connectors with locking ramp and without polarizing tabs mate with posted connectors on page 2206.
2. Refer to page 2219 for approved wire listing.
3. For strain reliefs and dust covers, see page 2204.
4. For keying plugs and panel mount end caps, see page 2205.
5. Other circuit sizes are available upon request. Minimums may apply.
6. Connector circuits can be molded closed for keying purposes. Minimums may apply.
7. Where no part numbers appear in the chart, parts can be made available upon request. Minimums may apply.
8. To determine connector overall length (Dim. A), multiply .156 x the number of circuits. Example: .156 x 10 circuits equals 1.560 inches [39.62 mm].

Connector Ordering Information

The "Base Part Numbers" Chart at right shows the base part number and number of circuits available for the described connectors.

Prefixes and suffixes are determined by the number of circuit positions in the connector. For example, the complete part number for a 10-position feed-thru connector with locking ramp and without polarizing tabs for 18 AWG wire would be:

Base number **xxxxxx** plus

prefix-and-suffix

1- — -0

The correct ordering number is

1-xxxxxx-0

Base Part Numbers

Connector Type & Wire Size	Feed-Thru with Locking Ramp				Feed-Thru without Locking Ramp			
	Without Tabs		With Tabs		Without Tabs		With Tabs	
	Connector Part Numbers	No. of Circuits	Connector Part Numbers	No. of Circuits	Connector Part Numbers	No. of Circuits	Connector Part Numbers	No. of Circuits
Standard UL94V-2, Tin Plated								
18 AWG 0.8-0.9 mm²	640599	2–24	644465[5]	2–14	640604	2–24	644469[5]	2–14
20 AWG 0.5-0.6 mm²	640600	2–24	644466[5]	2–14	640605	2–24	644470[5]	2–14
22 AWG 0.3-0.4 mm²	640601	2–24	644467[5]	2–14	640606	2–24	644471[5]	2–14
24 AWG 0.2 mm²	640602	2–24	644468[5]	2–14	640607	2–24	644472[5]	2–14

[5] Other circuit sizes are available upon request. Minimums may apply.

Note: Blocked circuit configurations are available upon request. Contact product engineer or product manager for details. Minimums may apply.

Feed-Thru with Locking Ramp

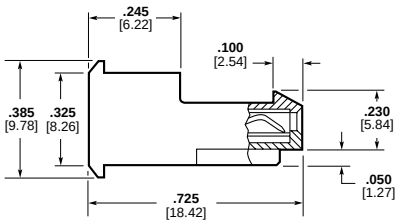

without Polarizing Tabs

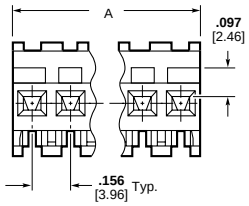

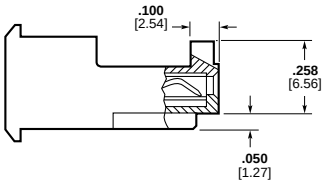

with Polarizing Tabs

Feed-Thru without Locking Ramp

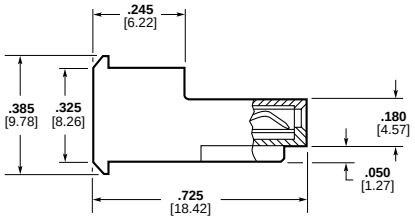

without Polarizing Tabs

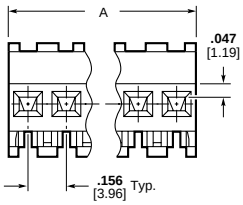

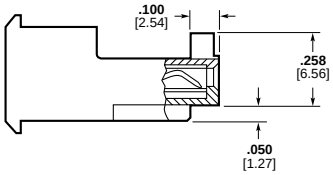

with Polarizing Tabs

Mating half visuals for Feed–Thru Connectors with Locking Ramp, see pages 2206 thru 2211 (2208 and 2209 Front Bend Headers Only).

Mating half visuals for Feed–Thru Connectors without Locking Ramp, see pages 2207 thru 2211.

For mateability options, see matrix on pages 2200 and 2201.

For complete product information, order Catalog 82056

Products for Industrial & Commercial Applications
Dimensions are shown for reference purposes only.
Dimensions are in inches and millimeters unless otherwise specified. Values in brackets are metric equivalents.
Specifications subject to change.
Technical Support Center 1-800-522-6752 www.tycoelectronics.com

Connector Accessories

Replacement IDC Contacts

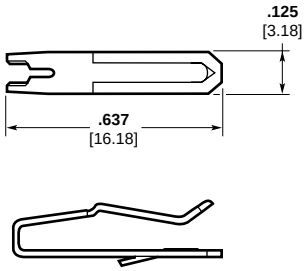

Wire Size		Part Numbers		
AWG	mm²	Tin Plated	.000030 [0.00076] Gold Plated	.000015 [0.00038] Gold Plated
18	0.8-0.9	640631-2	641143-2	641143-1
20	0.5-0.6	640632-2	641144-2	641144-1
22	0.3-0.4	640633-2	641145-2	641145-1
24	0.2	640634-2	641146-2	641146-1
26	0.12-0.15	640635-2	641147-2	641147-1

Material and Finish

Contacts — Phosphor bronze, post tin plated; .000030 [0.00076] or .000015 [0.00038] post gold plated over nickel

Note:
Tyco Electronics Corporation does not recommend terminating an MTA contact more than one time. Use replacement contacts when required for field repairs or wire changes.

Closed End and Feed-Thru Covers

Material:

Strain Relief Covers — UL94V-2 rated, nylon, white

Dust Covers — UL94V-0 rated, polyester, white

Cover Ordering Information

The "Base Part Numbers" Chart at right shows the base part number and number of circuits available for the described cover.

Prefixes and suffixes are determined by the number of circuit positions in the cover. For example, the complete part number for a 10-position closed-end strain relief cover would be:

Base number **xxxxxx** plus prefix-and-suffix

1- — -0

The correct ordering number is

1-xxxxxx-0

Strain Relief Covers

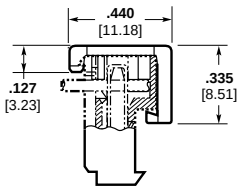

Closed End

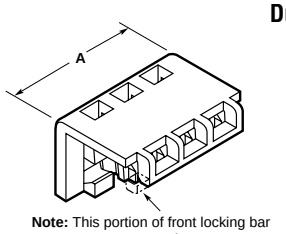

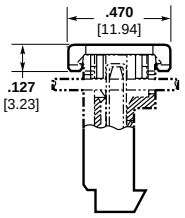

Feed-Thru

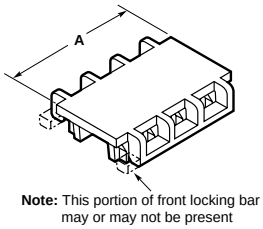

Dust Covers

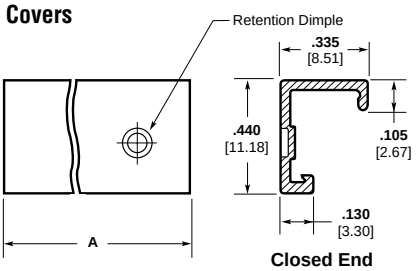

Closed End

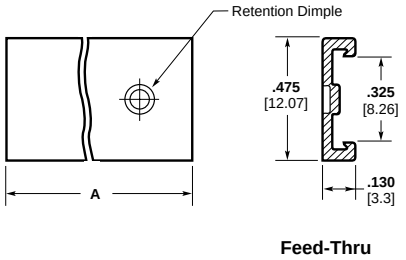

Feed-Thru

Base Part Numbers

Closed End				Feed-Thru			
Strain Relief Covers		Dust Covers		Strain Relief Covers		Dust Covers	
Cover Part Numbers	No. of Circuits	Cover Part Numbers	No. of Circuits	Cover Part Numbers	No. of Circuits	Cover Part Numbers	No. of Circuits
643067	2-24	640551	2-24	643071	2-24	640643	2-24

Cover Length

No. of Circuits	Dim. A	Prefix/ Suffix
2	**.312** 7.92	-2
3	**.468** 11.89	-3
4	**.624** 15.85	-4
5	**.780** 19.81	-5
6	**.936** 23.77	-6
7	**1.092** 27.74	-7
8	**1.248** 31.7	-8
9	**1.404** 35.66	-9
10	**1.560** 39.62	1- -0
11	**1.716** 43.59	1- -1
12	**1.872** 47.55	1- -2
13	**2.028** 51.51	1- -3
14	**2.184** 55.47	1- -4
15	**2.340** 59.44	1- -5
16	**2.496** 63.4	1- -6
17	**2.652** 67.36	1- -7
18	**2.808** 71.32	1- -8
19	**2.964** 75.29	1- -9
20	**3.120** 79.25	2- -0
21	**3.276** 83.21	2- -1
22	**3.432** 87.17	2- -2
23	**3.588** 91.14	2- -3
24	**3.744** 95.1	2- -4

For complete product information, order Catalog 82056

Products for Industrial & Commercial Applications
Dimensions are shown for reference purposes only.
Dimensions are in inches and millimeters unless otherwise specified. Values in brackets are metric equivalents.
Specifications subject to change.
Technical Support Center
1-800-522-6752
www.tycoelectronics.com

Connector Accessories

Keying Plugs

Material:
UL94V-2 rated, type 6/6 nylon, natural color

Note: Removal of contact is not necessary when using keying plug.

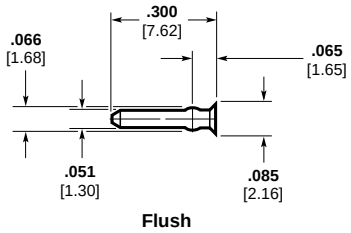

Flush

Loose Piece

Part Number 640629-1 **(Flush)**
Used with keyed headers

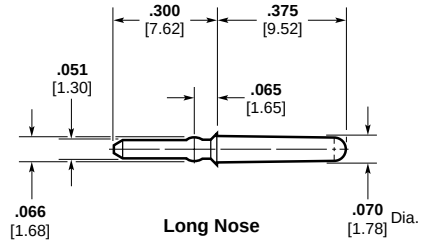

Long Nose

Part Number 640630-1 **(Long Nose)**
Used with staked post

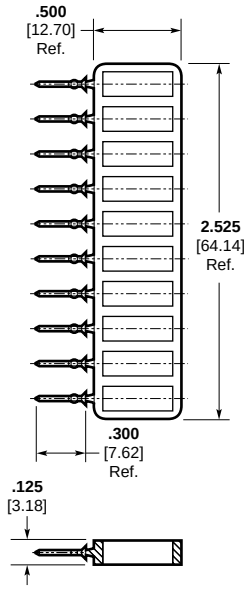

On Carrier Strip

Part Number 641623-1 **(Flush)**
(10 per strip)

Panel Mount End Caps

Material:
UL94V-2 rated, nylon, black

Notes:
1. Both left-hand and right-hand end caps are attached by a connecting tab. This tab must be broken off prior to installing on connector.
2. For best results attach panel mount end caps to the MTA-156 (IDC) connectors shown on pages 2202 thru 2203. While not preferred, panel mount end caps can be attached to MTA-156 (IDC) posted connector on page 2206.

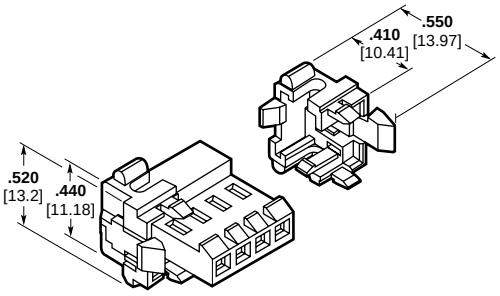

3- thru 24-Position
Part Number 641440-1
See Note 1

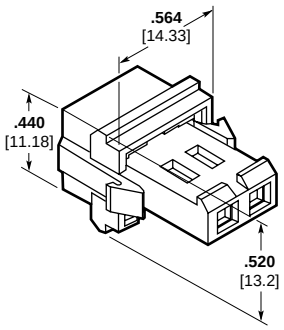

2-Position Only
Part Number 641533-1

No. of Positions	Dim. A
3	**.736** 18.69
4	**.892** 22.66
6	**1.204** 30.58
9	**1.672** 42.47
12	**2.140** 54.36
15	**2.608** 66.24
24	**4.012** 101.9

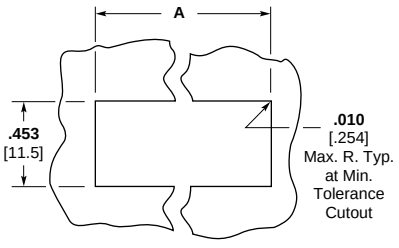

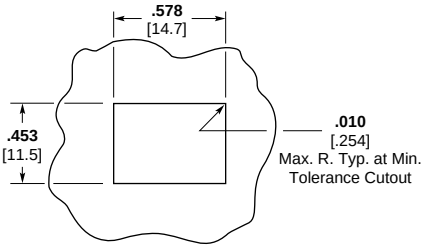

Recommended Panel Cutout
(Recommended Panel Thickness .062 [1.57] to .067 [1.70] max.)

For complete product information, order Catalog 82056

Products for Industrial & Commercial Applications
Dimensions are shown for reference purposes only.
Dimensions are in inches and millimeters unless otherwise specified. Values in brackets are metric equivalents.
Specifications subject to change.
Technical Support Center
1-800-522-6752
www.tycoelectronics.com

IDC Posted Connectors (Wire-to-Wire) — Closed End, Feed-Thru

Material and Finish:

Housing — UL 94V-2 rated, 6/6, 6/12 nylon, see chart for color

Contacts — Copper alloy, post tin or .000030 [.00076] gold plated over nickel

Closed End

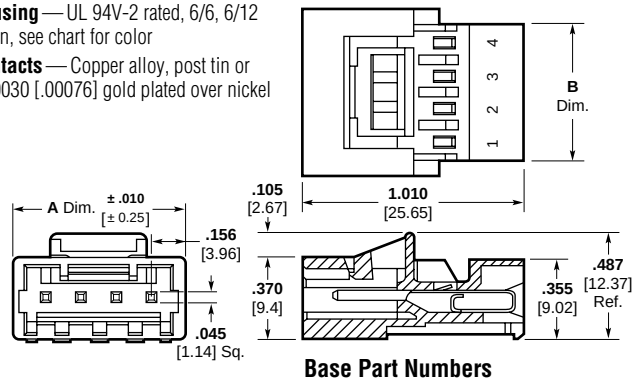

Feed-Thru

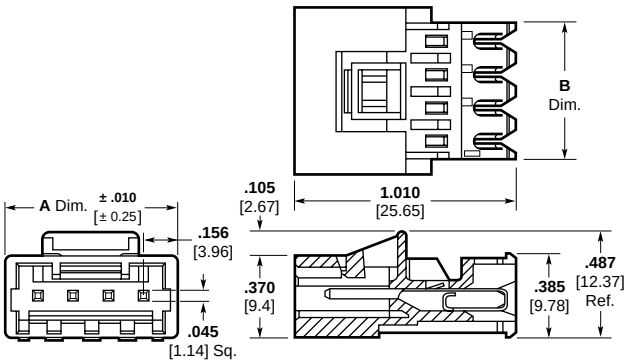

Base Part Numbers

Connector Type & Wire Size	Closed End Connector		Feed-Thru Connector	
	Part Numbers	No. of Circuits	Part Numbers	No. of Circuits
Standard UL 94V-2, Tin Plated				
18 AWG 0.8-0.9 mm²	641435	2, 3, 4, 6, 9, 12, 15, 24	641522	2, 3, 4, 6, 9, 12, 15, 24
20 AWG 0.5-0.6 mm²	641436	2, 3, 4, 6, 9, 12, 15, 24	641523	2, 3, 4, 6, 9, 12, 15, 24
22 AWG 0.3-0.4 mm²	641437	2, 3, 4, 6, 9, 12, 15, 24	641524	2, 3, 4, 6, 9, 12, 15, 24
24 AWG 0.2 mm²	641438	2, 3, 4, 6, 9, 12, 15, 24	641525	2, 3, 4, 6, 9, 12, 15, 24
26 AWG 0.12-0.15 mm²	641439	2, 3, 4, 6, 9, 12, 15, 24	641526	2, 3, 4, 6, 9, 12, 15, 24
Standard UL 94V-2, .000030 [0.00076] Gold Plated				
18 AWG 0.8-0.9 mm²	644807	2, 3, 4, 6, 9, 12, 15, 24	644812	2, 3, 4, 6, 9, 12, 15, 24
20 AWG 0.5-0.6 mm²	—[2]	—	—[2]	—
22 AWG 0.3-0.4 mm²	644809	2, 3, 4, 6, 9, 12, 15, 24	644814	2, 3, 4, 6, 9, 12, 15, 24
24 AWG 0.2 mm²	—[2]	—	—[2]	—
26 AWG 0.12-0.15 mm²	—[2]	—	—[2]	—

[1] MTA-156 Posted Connectors (Closed End and Feed-Thru) **will Only mate** with MTA-156 connectors with locking ramp and without polarizing tabs. They **will NOT mate** with MTA-156 Quad Connectors.

[2] Parts can be made available upon request. Minimums may apply.

Notes:
1. Mating half visuals - pages 2202 thru 2203.
2. Strain relief & dust covers - page 2204.
3. Approved wire listing - page 2219.

Connector Ordering Information

The "Base Part Numbers" Chart at right shows the base part number and number of circuits available for the described connectors.

Prefixes and suffixes are determined by the number of circuit positions in the connector. For example, the complete part number for a 12-position closed end connector for 18 AWG wire would be:

Base number **xxxxxx** plus

prefix-and-suffix

1- — -2

The correct ordering number is

1-xxxxxx-2

No. of Circuits	Dim. A	Dim. B	Suffix
2	**.468** 11.89	**.316** 8.03	-2
3	**.624** 15.85	**.472** 11.99	-3
4	**.780** 19.81	**.628** 15.95	-4
6	**1.092** 27.74	**.940** 23.88	-6

No. of Circuits	Dim. A	Dim. B	Prefix/ Suffix
9	**1.560** 39.62	**1.408** 35.76	-9
12	**2.028** 51.51	**1.876** 47.65	1- -2
15	**2.496** 63.40	**2.344** 59.54	1- -5
24	**3.900** 99.06	**3.748** 95.20	2- -4

Color Coding by Wire Size for UL 94V-2 Connectors

18 AWG — Orange
20 AWG — Yellow
22 AWG — Red
24 AWG — White
26 AWG — Blue

Performance Data:

Voltage Rating — 600 VAC

Current Rating — 7 amp max.

Low-Level Resistance — 7 mΩ max. initial

Dielectric Withstanding Voltage — 1500 VAC/1 min.

Insulation Resistance — 5000 MΩ min. initial

Operating Temperature — -55° C to +105° C

Technical Documents:

Product Specification
108-1065 MTA-156 Posted Connector

Application Specification
114-1020 MTA-156 Connectors, Posted Connectors and Card Edge Connectors

Replacement IDC Contacts

Material and Finish:

Contacts — Copper alloy, post tin plated over nickel

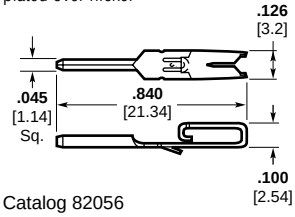

Wire Size AWG	Wire Size mm²	Part Numbers
18	0.8-0.9	641425-1
20	0.5-0.6	641426-1
22	0.3-0.4	641427-1
24	0.2	641428-1
26	0.12-0.15	641429-1

For complete product information, order Catalog 82056

Products for Industrial & Commercial Applications
Dimensions are shown for reference purposes only.
Dimensions are in inches and millimeters unless otherwise specified. Values in brackets are metric equivalents.
Specifications subject to change.
Technical Support Center 1-800-522-6752 www.tycoelectronics.com

Flat Headers — Straight

Material and Finish:

Housing — UL94V-0 rated, polyester, white

Posts — Copper alloy, tin plated, .000030 [0.00076] or .000015 [0.00038] gold over nickel

Notes:
1. Post(s) can be omitted for keying purposes. Specify the desired post(s) to be omitted using the figure to identify Post No. 1.
2. Gold headers are duplex plated, gold on mating end of post and tin on the soldertail.
3. .125 [3.18] soldertail lengths are for .062 [1.57] thick printed circuit board and .175 [4.45] soldertail lengths are for .093-.125 [2.36-3.18] thick printed circuit boards.
4. To determine header overall length (Dim. A), multiply .156 x the number of posts. Example: .156 x 10 posts equals 1.560 inches [39.62 mm].

For mateability options, see matrix on pages 2200, 2201, 2212 and 2214.

For mating half visuals, see pages 2202, 2203, 2213, 2216 and 2217.

PC Board Hole Diameters	
Square Post	Round Post
.080/.070 [2.03/1.78]	.070/.060 [1.78/1.52]

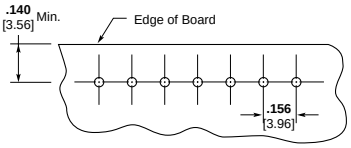

Recommended Mounting Hole Size for .062 [1.57] Thk. PC Board

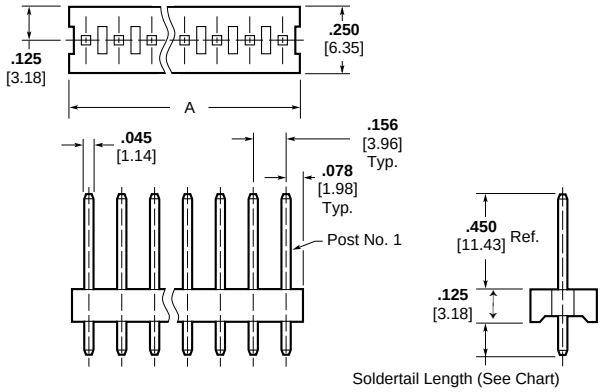

Base Part Numbers

Square Posts				Round Posts			
.125 [3.18] Soldertail		.175 [4.45] Soldertail		.125 [3.18] Soldertail		.175 [4.45] Soldertail	
Header Part Nos.	No. of Posts	Header Part Nos.	No. of Posts	Header Part Nos.	No. of Posts	Header Part Nos.	No. of Posts
Standard UL94V-0, Tin Plated							
640383	2-24	644749	2-24	640384	2-24	644750	2-24
Standard UL94V-0, .000030 [0.00076] Gold Plated							
641202	2-24	644756	2-24	641203	2-24	644757	2-24
Standard UL94V-0, .000015 [0.00038] Gold Plated							
641113	2-24	644763	2-24	641114	2-24	644764	2-24

Flat Headers — Right-Angle

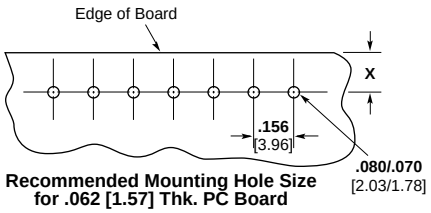

Recommended Mounting Hole Size for .062 [1.57] Thk. PC Board

X = .140 [3.56] Min., .430 [10.92] Max. when mated with MTA-156 Connector
X = .140 [3.56] Min. when mated with SL-156 Wire-to-Board Connector.

Note: Consult Product Drawing for details on placing headers onto pc boards.

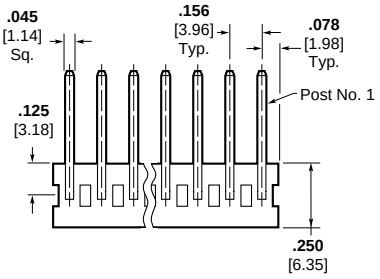

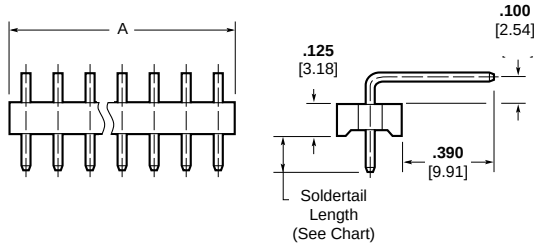

Base Part Numbers

Square Posts			
.125 [3.18] Soldertail		.175 [4.45] Soldertail	
Header Part Nos.	No. of Posts	Header Part Nos.	No. of Posts
Standard UL94V-0, Tin Plated			
640385	2-24	644751	2-24
Standard UL94V-0, .000030 [0.00076] Gold Plated			
641204	2-24	644758	2-24
Standard UL94V-0, .000015 [0.00038] Gold Plated			
641115	2-24	644765	2-24

Header Ordering Information

The "Base Part Numbers" Chart at right shows the base part number and number of posts available for the described headers.

Prefixes and suffixes are determined by the number of post positions in the header. For example, the complete part number for a 10-position header with square posts and a .125 [3.18] soldertail length would be:

Base number **xxxxxx** plus

prefix-and-suffix

1- — -0

The correct ordering number is

1-xxxxxx-0

Note:
Select load headers (omitted pin headers) are available upon request. Please contact product engineer or product manager for details.

For complete product information, order Catalog 82056

Products for Industrial & Commercial Applications
Dimensions are shown for reference purposes only.
Dimensions are in inches and millimeters unless otherwise specified. Values in brackets are metric equivalents.
Specifications subject to change.
Technical Support Center 1-800-522-6752 www.tycoelectronics.com

Material and Finish:

Housing — UL94V-0 rated, polyester, white

Posts — Copper alloy, tin plated, .000030 [0.00076] or .000015 [0.00038] gold over nickel

Notes:
1. Post(s) can be omitted for keying purposes. Specify the desired post(s) to be omitted using the figure to identify Post No. 1.
2. Gold headers are duplex plated, gold on mating end of post and tin on the soldertail.
3. .125 [3.18] soldertail lengths are for .062 [1.57] thick printed circuit board and .175 [4.45] soldertail lengths are for .093-.125 [2.36-3.18] thick printed circuit boards.
4. To determine header overall length (Dim. A), multiply .156 x the number of posts. Example: .156 x 10 posts equals 1.560 inches [39.62 mm].

For mateability options, see matrix on pages 2200, 2201, 2212 and 2214.

For mating half visuals, use connectors with a locking ramp for polarization/retention purposes, see pages 2202, 2203, 2213, 2216 and 2217.

For polarizing purposes only use connectors without a locking ramp. See pages 2202, 2203, 2213, 2216 and 2217.

Header Ordering Information

The "Base Part Numbers" Chart at right shows the base part number and number of posts available for the described headers.

Prefixes and suffixes are determined by the number of post positions in the header. For example, the complete part number for a 10-position header with square posts and a .125 [3.18] soldertail length would be:

Base number **xxxxxx** plus prefix-and-suffix

1- — -0

The correct ordering number is

1-xxxxxx-0

Note:
Select load headers (omitted pin headers) are available upon request. Please contact product engineer or product manager for details.

Friction Lock Headers — Straight

PC Board Hole Diameters	
Square Post	Round Post
.080/.070 [2.03/1.78]	.070/.060 [1.78/1.52]

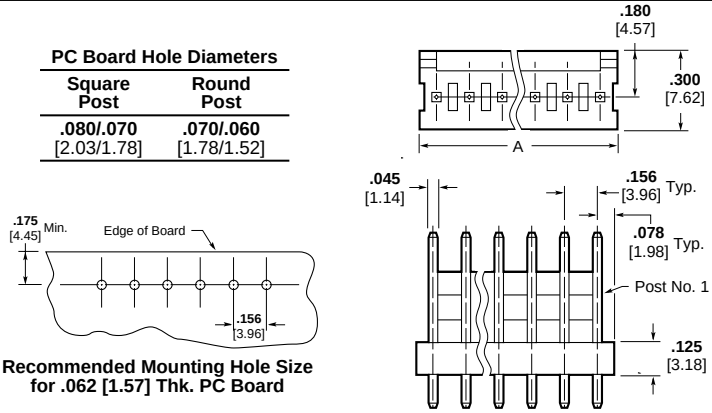

Recommended Mounting Hole Size for .062 [1.57] Thk. PC Board

Y = .068 [1.73] 2-8 position tin plated and 2-24 position gold plated headers.

Y = .073 [1.85] 9-24 position tin plated headers.

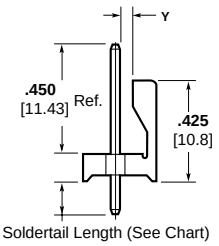

Base Part Numbers

Square Posts				Round Posts			
.125 [3.18] Soldertail		.175 [4.45] Soldertail		.125 [3.18] Soldertail		.175 [4.45] Soldertail	
Header Part Numbers	No. of Posts	Header Part Numbers	No. of Posts	Header Part Numbers	No. of Posts	Header Part Numbers	No. of Posts
Standard UL94V-0, Tin Plated							
640445	2-24	644752	2-24	640388	2-24	644753	2-24
643495-2	5[1]						
Standard UL94V-0, .000030 [0.00076] Gold Plated							
641208	2-24	644759	2-24	641209	2-24	644760	2-24
Standard UL94V-0, .000015 [0.00038] Gold Plated							
641119	2-24	644766	2-24	641120	2-24	644767	2-24

[1] Post Numbers 2 and 4 Omitted

Friction Lock Headers — Right-Angle

When using Rear Bend Headers — use connectors without a locking ramp.

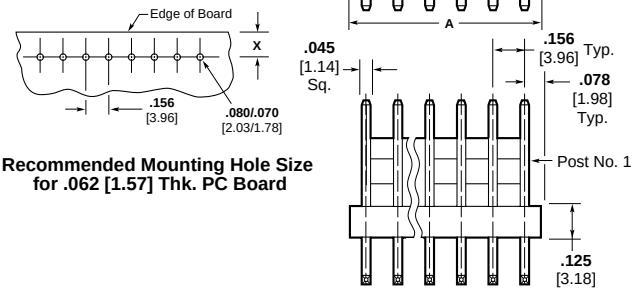

Recommended Mounting Hole Size for .062 [1.57] Thk. PC Board

*See Y dimension above.

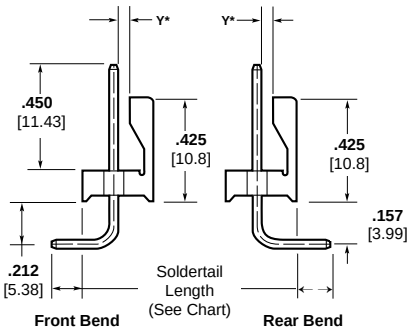

Note: Consult Product Drawing for **X** Dim. and details on placing headers onto pc boards.

Base Part Numbers

Square Posts					
Front Bend				Rear Bend	
.125 [3.18] Soldertail		.175 [4.45] Soldertail		.125 [3.18] Soldertail	
Header Part Numbers	No. of Posts	Header Part Numbers	No. of Posts	Header Part Numbers	No. of Posts
Standard UL94V-0, Tin Plated					
640389	2-24	644754	2-24	640387	2-24
Standard UL94V-0, .000030 [0.00076] Gold Plated					
641210	2-24	644761	2-24	641207	2-24

For complete product information, order Catalog 82056

Products for Industrial & Commercial Applications
Dimensions are shown for reference purposes only.
Dimensions are in inches and millimeters unless otherwise specified. Values in brackets are metric equivalents.
Specifications subject to change.
Technical Support Center
1-800-522-6752
www.tycoelectronics.com

Material and Finish:

Housing — UL94V-0 rated, polyester, white

Posts — Copper alloy, tin plated or .000030 [0.00076] gold over nickel

Notes:
1. Post(s) can be omitted for keying purposes. Specify the desired post(s) to be omitted using the figure to identify Post No. 1.
2. Peg holes are not required in PC Boards when headers without pegs are used.
3. One peg only on a 2 position header, other position sizes have two pegs.
4. Headers with .00015 [0.00038] gold plated post are available upon request. Minimums may apply.
5. To determine header overall length (Dim. A), multiply .156 x the number of posts. Example: .156 x 10 posts equals 1.560 inches [39.62 mm].

For mateability options, see matrix on pages 2200, 2201, 2212 and 2214.

For mating half visuals, use connectors with a locking ramp for polarization/retention purposes, see pages 2202, 2203, 2213, 2216 and 2217.

For polarizing purposes only use connectors without a locking ramp. See pages 2202, 2203, 2216 and 2217.

Header Ordering Information

The "Base Part Numbers" Chart at right shows the base part number and number of posts available for the described headers.

Prefixes and suffixes are determined by the number of post positions in the header. For example, the complete part number for a 10-position header with square posts with pegs would be:

Base number **xxxxxx** plus prefix-and-suffix

1- — -0

The correct ordering number is

1-xxxxxx-0

Note:
Select load headers (omitted pin headers) are available upon request. Please contact product engineer or product manager for details.

Polarized Lock Headers — Straight

PC Board Hole Diameters
Square Post
.069/.065 [1.75/1.65]

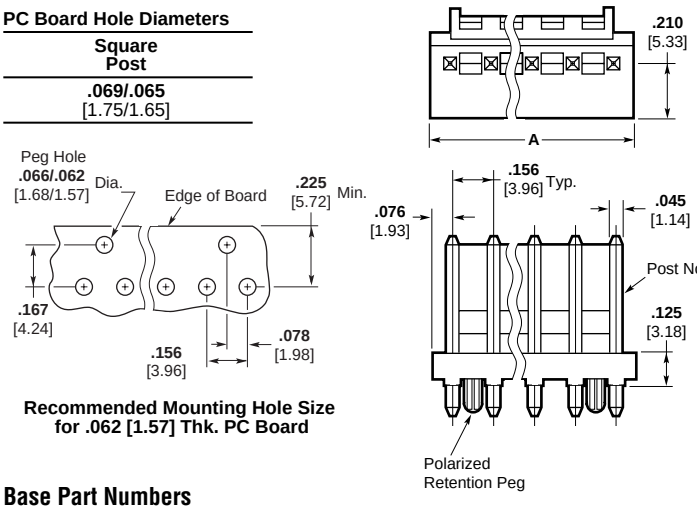

Recommended Mounting Hole Size for .062 [1.57] Thk. PC Board

Polarized Retention Peg

Base Part Numbers

Square Posts			
Without Pegs		With Pegs	
Header Part Numbers	No. of Posts	Header Part Numbers	No. of Posts
Standard UL94V-0, Tin Plated			
644611	2-18	644615	2-18
Standard UL94V-0, .000030 [0.00076] Gold Plated			
644627	2-18	644631	2-18

Polarized Lock Headers — Right-Angle

X = .350 [8.89] Min., .825 [20.96] Max. when mated with MTA-156 Connector
X = .350 [8.89] Min. when mated with SL-156 Connector.

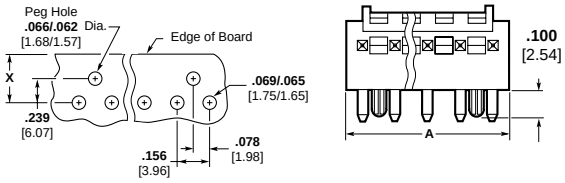

Recommended Mounting Hole Size for .062 [1.57] Thk. PC Board

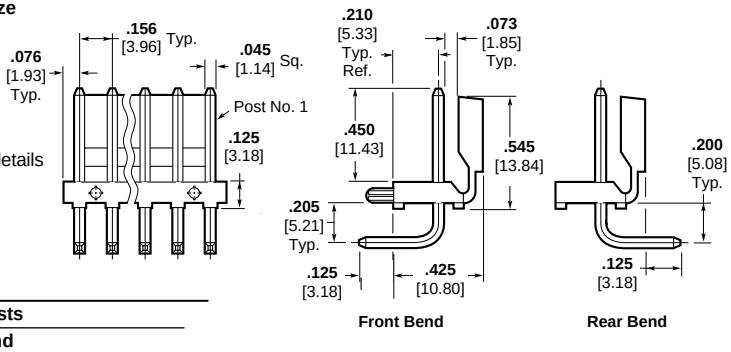

Front Bend **Rear Bend**

Note: Consult Product Drawing for details on placing headers onto pc boards.

Contact product engineer or product manager for details on Rear Bend.

Base Part Numbers

Square Posts			
Front Bend			
Without Pegs		With Pegs	
Header Part Numbers	No. of Posts	Header Part Numbers	No. of Posts
Standard UL94V-0, Tin Plated			
644613	2-18	644617	2-18
Standard UL94V-0, .000030 [0.00076] Gold Plated			
644629	2-18	644633	2-18

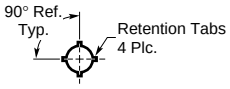

Polarized Retention Peg

For complete product information, order Catalog 82056

Products for Industrial & Commercial Applications
Dimensions are shown for reference purposes only.
Dimensions are in inches and millimeters unless otherwise specified. Values in brackets are metric equivalents.
Specifications subject to change.
Technical Support Center
1-800-522-6752
www.tycoelectronics.com

Friction Lock High Temperature Headers — Straight

For use with Infrared Reflow Process

Maximum Temperature Rating: 235°C

Material and Finish:

Housing — UL94V-0 rated, thermoplastic, polyester, black

Posts — Copper alloy, tin plated, .000015 [0.00038] gold over nickel

Notes:
1. Post(s) can be omitted for keying purposes. Specify the desired post(s) to be omitted using the figure to identify Post No. 1.
2. Gold headers are duplex plated, gold on mating end of post and tin tin on the soldetail.
3. Headers with straight and right angle square posts are available upon request. Minimums may apply.
4. To determine header overall length (Dim. A), multiply .156 x the number of posts. Example: .156 x 10 posts equals 1.560 inches [39.62 mm].

For mateability options, see matrix on pages 2200, 2201, 2212 and 2214.

For mating half visuals, use connectors with a locking ramp for polarization/retention purposes, see pages 2202, 2203, 2213, 2216 and 2217.

For polarizing purposes only use connectors without a locking ramp. See pages 2202, 2203, 2216 and 2217.

Header Ordering Information

The "Base Part Numbers" Chart at right shows the base part number and number of posts available for the described headers.

Prefixes and suffixes are determined by the number of post positions in the header. For example, the complete part number for a 10-position header with round tin plated posts:

Base number **xxxxxx** plus prefix-and-suffix

1- — -0

The correct ordering number is

1-xxxxxx-0

Note:
Select load headers (omitted pin headers) are available upon request. Please contact product engineer or product manager for details.

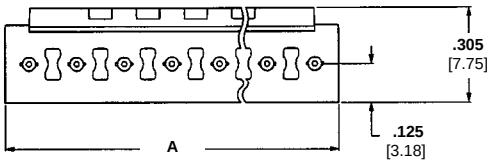

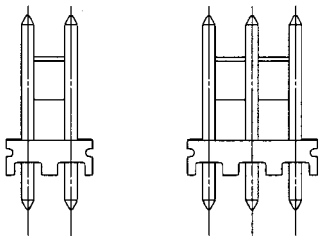

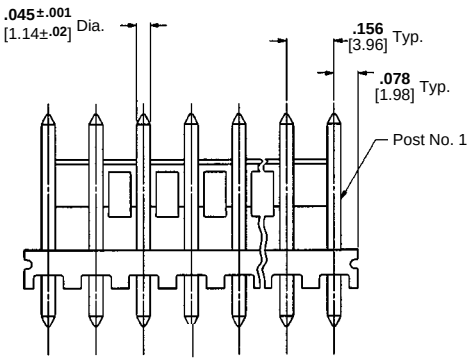

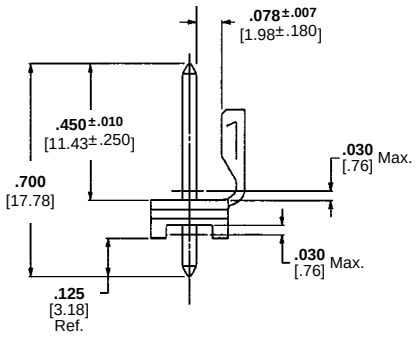

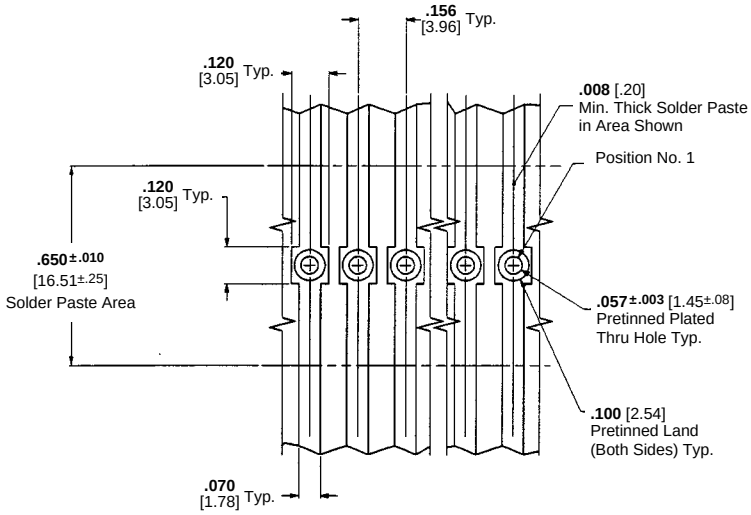

Recommended Mounting Hole Pattern for .062 [1.57] Thick PC Board

Base Part Numbers

Round Post	
Header Part Numbers	**No. of Posts**
Standard UL94V-0, Tin Plated	
647260	2-11
Standard UL94V-0, .000015 [0.00038] Gold Plated	
647261	2-11
Tube Loaded UL94V-0, Tin Plated	
647262	2-11
Tube Loaded UL94V-0, .000015 [0.00038] Gold Plated	
644322	2-11

For complete product information, order Catalog 82056

Products for Industrial & Commercial Applications
Dimensions are shown for reference purposes only.
Dimensions are in inches and millimeters unless otherwise specified. Values in brackets are metric equivalents.
Specifications subject to change.
Technical Support Center
1-800-522-6752
www.tycoelectronics.com

Shrouded Headers — Straight and Right-Angle

Material and Finish:

Housing — UL94V-0 rated, polyester, black

Posts — Copper alloy, tin plated; or .000030 [0.00076] or .000015 [0.00038] gold over nickel

Notes:
1. Post(s) can be omitted for keying purposes. Specify the desired post(s) to be omitted using the figure to identify Post No. 1.
2. Gold headers are duplex plated, gold on mating end of post and tin on the soldertail.
3. Peg holes are not required in PC boards when headers without pegs are used.
4. One peg only on a 2 position header, other position sizes have two pegs.
5. Right angle front and rear bend headers with retention pegs can be made available upon request. Minimums may apply.

For mateability options, see matrix on pages 2200, 2201, 2212 and 2214.
For mating half visuals, see pages 2202, 2203 and 2213.

Header Ordering Information

The "Base Part Numbers" Chart at right shows the base part number and number of posts available for the described headers. Prefixes and suffixes are determined by the number of post positions in the header. For example, the complete part number for a 10-position header with straight, square posts and with pegs would be:

Base number **xxxxxx** plus prefix-and-suffix

1- — -0

The correct ordering number is

1-xxxxxx-0

Header Length

No. of Circuits	Dim. A	Prefix/ Suffix
2	**.406** 10.31	-2
3	**.562** 14.27	-3
4	**.718** 18.24	-4
5	**.874** 22.20	-5
6	**1.030** 26.16	-6
7	**1.186** 30.12	-7
8	**1.342** 34.09	-8
9	**1.498** 38.05	-9
10	**1.654** 42.01	1--0
11	**1.810** 45.97	1--1
12	**1.966** 49.94	1--2

Straight Post (.045 [1.14] Square or Round)

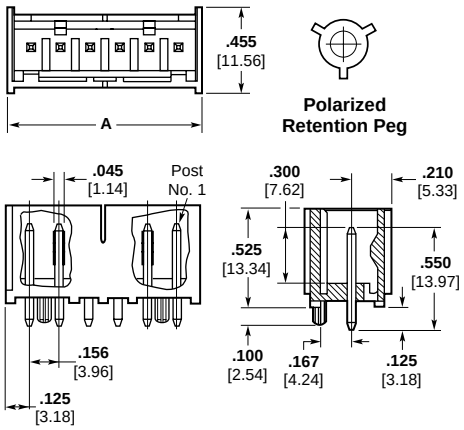

PC Board Hole Diameters

Square Post	Round Post
.069/.065 [1.75/1.65]	**.054/.050** [1.37/1.27]

Right-Angle Post (.045 [1.14] Square)

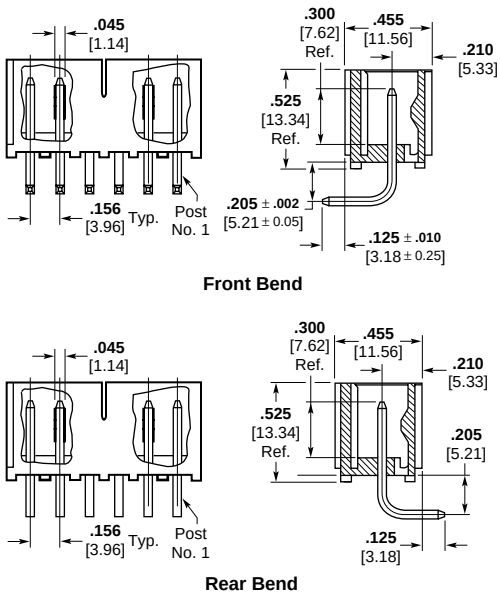

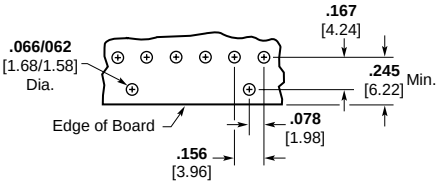

Recommended Mounting Hole Size for .062 [1.57] Thick PC Board Using a Straight Post Header

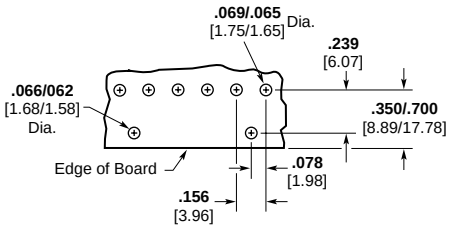

Recommended Mounting Hole Size for .062 [1.57] Thick PC Board Using a Right-Angle Header

Note: Consult Product Drawing for details on placing headers onto pc boards.

Base Part Numbers

Straight Square Posts				Straight Round Posts			
Without Pegs		With Pegs		Without Pegs		With Pegs	
Header Part Numbers	No. of Posts	Header Part Numbers	No. of Posts	Header Part Numbers	No. of Posts	Header Part Numbers	No. of Posts
Standard UL94V-0, Tin Plated							
647123	2-12	647127	2-12	647124	2-12	647128	2-12
Standard UL94V-0, .000030 [0.00076] Gold Plated							
647131	2-12	647135	2-12	647132	2-12	647136	2-12
Standard UL94V-0, .000015 [0.00038] Gold Plated							
647139	2-12	647143	2-12	647140	2-12	647144	2-12

Square Posts			
Right-Angle Posts, Front Bend Without Pegs		Right-Angle Posts, Rear Bend Without Pegs	
Header Part Numbers	No. of Posts	Header Part Numbers	No. of Posts
Standard UL94V-0, Tin Plated			
647125	2-12	647126	2-12
Standard UL94V-0, .000030 [0.00076] Gold Plated			
647133	2-12	647134	2-12
Standard UL94V-0, .000015 [0.00038] Gold Plated			
647141	2-12	647142	2-12

Note: Select load headers (omitted pin headers) are available upon request. Please contact product engineer or product manager for details.

Products for Industrial & Commercial Applications
Dimensions are shown for reference purposes only.
Dimensions are in inches and millimeters unless otherwise specified. Values in brackets are metric equivalents.
Specifications subject to change.
Technical Support Center
1-800-522-6752
www.tycoelectronics.com

Product Facts

- **Provides four points of contact**
- **Greater current carrying capability**
- **Connector styles include both closed end and feed-thru with locking ramp, with and without polarizing tabs in 2 through 12 positions**
- **Available for wire ranges of 18 – 22 AWG [0.9– 0.3 mm²]**
- **Contacts are lubricated to prevent fretting corrosion**
- **Complies with AMP Specification 109-151, "Current Rating Verification"**
- **Uses existing MTA application tooling for termination**
- **Quad connectors preloaded with contacts**
- **All contacts are slotted for insulation displacement (IDC) termination technique**
- **Connectors and headers are end to end stackable**
- **AWG size is "frosted" on the side of the connector**
- **Recognized under the Component Program of Underwriters Laboratories Inc., File No. E28476**
- **Certified by Canadian Standards Association, File No. LR 7189**
- **Satisfies the VDE requirements according to VDE 110, Insulation Group B, 250 vac for air and creepage paths**

The MTA-156 Quad Connector provides a connection with four points of contact. The UL94V-0 rated connector with multi-point contacts provides greater current carrying capability. These connectors comply with AMP Specification 102-6* and satisfy the VDE requirements according to VDE 110.

The connectors are available for wire ranges of 18 – 22 AWG [0.9– 0.3 mm²] and in a variety of styles including closed end and feed-thru with locking ramp, with and without polarizing tabs.

Only one wire to be terminated into an IDC contact slot.

*The 102-6 Test Specification is the new AMP Current Rating Verification Procedure. Its purpose is to provide a means for verifying the maximum current carrying capacity of the device.

Note: Refer to page 2219 for approved wire listings.

This matrix has been prepared to assist you, our customer, in defining the correct mating halves for the MTA-156 header and connector combination. Where a "Y" is indicated the combination is a valid mating pair.

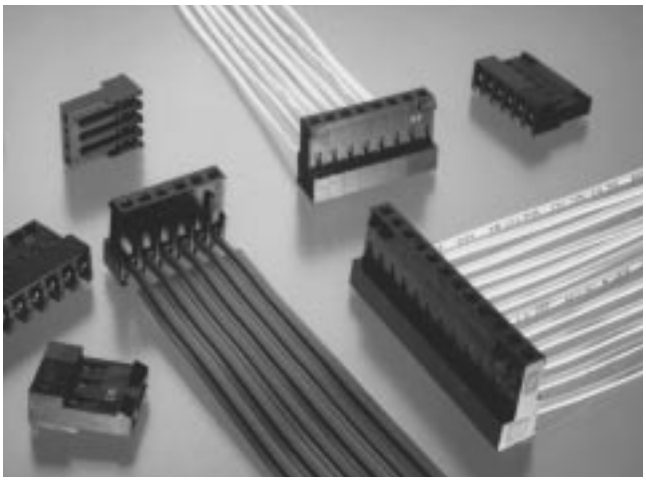

The MTA-156 Quad Connectors only mate with standard MTA-156 square post headers and use existing MTA application tooling for termination.

Performance Data:

Voltage Rating — 600 vac

Current Rating — 12.5 amp max. on a single circuit

For Multiple Circuit Loading — refer to Product Specification for current rating chart.

Low-Level Resistance — 3.0 mΩ max. initial

Dielectric Withstanding Voltage — 1500 vac/1 min.

Insulation Resistance — 5000 MΩ min. initial

Operating Temperature — -55° C to +105° C

Technical Documents:

Product Specification
108-1219 Connector System, MTA-156, Quad

Application Specification
114-1048 MTA-156 Quad Connector

Headers

Connectors	640383	640385	640389	640445	644611	644613	644615	644617	644749	644751	644752	644754	647123	647125	647126	647127	647129	647130	647185	647187	647188	647190	647206	647208	647209	647211	647227	647229
644329	Y	Y	Y	Y	Y	Y	Y	Y	Y	Y	Y	Y	Y	Y	Y	Y	Y	Y	Y	Y	Y	Y	Y	Y	Y	Y	Y	Y
644370	Y	Y	Y	Y	Y	Y	Y	Y	Y	Y	Y	Y	Y	Y	Y	Y	Y	Y	Y	Y	Y	Y	Y	Y	Y	Y	Y	Y
644371	Y	Y	Y	Y	Y	Y	Y	Y	Y	Y	Y	Y	Y	Y	Y	Y	Y	Y	Y	Y	Y	Y	Y	Y	Y	Y	Y	Y
644375	Y	Y	Y	Y	Y	Y	Y	Y	Y	Y	Y	Y	Y	Y	Y	Y	Y	Y	Y	Y	Y	Y	Y	Y	Y	Y	Y	Y
644376	Y	Y	Y	Y	Y	Y	Y	Y	Y	Y	Y	Y	Y	Y	Y	Y	Y	Y	Y	Y	Y	Y	Y	Y	Y	Y	Y	Y
644377	Y	Y	Y	Y	Y	Y	Y	Y	Y	Y	Y	Y	Y	Y	Y	Y	Y	Y	Y	Y	Y	Y	Y	Y	Y	Y	Y	Y
644381	Y	Y	Y	Y	Y	Y	Y	Y	Y	Y	Y	Y	Y	Y	Y	Y	Y	Y	Y	Y	Y	Y	Y	Y	Y	Y	Y	Y
644382	Y	Y	Y	Y	Y	Y	Y	Y	Y	Y	Y	Y	Y	Y	Y	Y	Y	Y	Y	Y	Y	Y	Y	Y	Y	Y	Y	Y
644383	Y	Y	Y	Y	Y	Y	Y	Y	Y	Y	Y	Y	Y	Y	Y	Y	Y	Y	Y	Y	Y	Y	Y	Y	Y	Y	Y	Y
644387	Y	Y	Y	Y	Y	Y	Y	Y	Y	Y	Y	Y	Y	Y	Y	Y	Y	Y	Y	Y	Y	Y	Y	Y	Y	Y	Y	Y
644388	Y	Y	Y	Y	Y	Y	Y	Y	Y	Y	Y	Y	Y	Y	Y	Y	Y	Y	Y	Y	Y	Y	Y	Y	Y	Y	Y	Y
644389	Y	Y	Y	Y	Y	Y	Y	Y	Y	Y	Y	Y	Y	Y	Y	Y	Y	Y	Y	Y	Y	Y	Y	Y	Y	Y	Y	Y

For complete product information, order Catalog 82056

IDC Quad Connectors — Closed End and Feed-Thru

Closed End with Locking Ramp

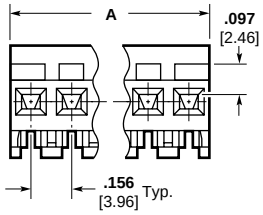

Feed-Thru with Locking Ramp

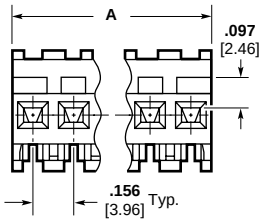

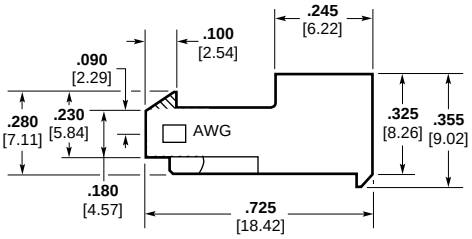

without Polarizing Tabs

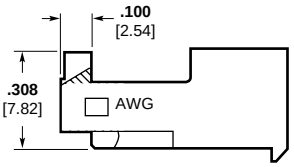

with Polarizing Tabs

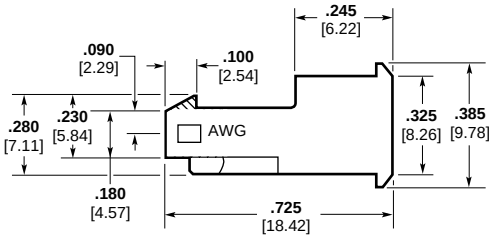

without Polarizing Tabs

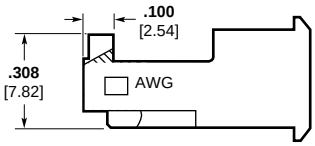

with Polarizing Tabs

Material and Finish:

Housing — UL94V-0 rated, 6/6 nylon, black

Contacts — High conductivity copper alloy, post tin plated

For mateability options, see matrix on page 2212.

For strain relief and dust covers, see page 2204.

For mating half visuals, see pages 2207 thru 2211 (2208 and 2209 Front Bend Headers only). **Mates with tin-plated square posts only.**

Refer to pages 2219 thru 2223 for approved wire listing.

Note:
To determine connector overall length (Dim. A), multiply .156 x the number of circuits. Example: .156 x 10 circuits equals 1.560 inches [39.62 mm].

Base Part Numbers

Connector Type & Wire Size	Closed End with Locking Ramp				Feed-Thru with Locking Ramp			
	Without Tabs		With Tabs		Without Tabs		With Tabs	
	Connector Part Numbers	No. of Circuits	Connector Part Numbers	No. of Circuits	Connector Part Numbers	No. of Circuits	Connector Part Numbers	No. of Circuits
Standard UL94V-0, Tin Plated								
18 AWG 0.8-0.9 mm²	644329	2–12	644381	2–12	644375	2–12	644387	2–12
20 AWG 0.5-0.6 mm²	644370	2–12	644382	2–12	644376	2–12	644388	2–12
22 AWG 0.3-0.4 mm²	644371	2–12	644383	2–12	644377	2–12	644389	2–12

Connector Ordering Information

The "Base Part Numbers" Chart above shows the base part number and number of circuits available for the described connectors.

Prefixes and suffixes are determined by the number of circuit positions in the connector. For example, the complete part number for a 10-position closed end connector with locking ramp and without polarizing tabs for 18 AWG wire would be:

Base number **xxxxxx** plus prefix-and-suffix

1- — -0

The correct ordering number is

1-xxxxxx-0

For complete product information, order Catalog 82056

Replacement IDC Contacts

Material and Finish:

Contacts — High conductivity copper alloy post tin plated

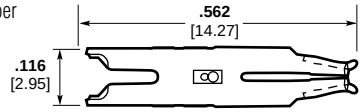

Note: Tyco Electronics does not recommend terminating an MTA contact more than one time. Use replacement contacts when required for field repairs or wire gage changes.

Wire Size		Part Numbers
AWG	mm²	
18	0.8-0.9	644508-1
20	0.5-0.6	644509-1
22	0.3-0.4	644510-1

Products for Industrial & Commercial Applications
Dimensions are shown for reference purposes only.
Dimensions are in inches and millimeters unless otherwise specified. Values in brackets are metric equivalents.
Specifications subject to change.
Technical Support Center
1-800-522-6752
www.tycoelectronics.com

Product Facts

- **Rugged wire-to-board interconnection to mate with .045 square or round post headers or staked posts on .156 centers**
- **Connectors accept wire range of 18–24 AWG [0.9–0.2 mm²]**
- **Two-piece interconnection system (connector/header)**
- **Housing made of flame retardant nylon**
- **Available in 1- through 24-position connector configurations**
- **Connectors are end-to-end stackable in Standard Housings**
- **Wire-to-board system offers polarization with friction lock for positive mating**
- **Meets the material requirements of Table 23.1 of UL1410 Standard for High-Voltage Television Receivers and Video Productions**

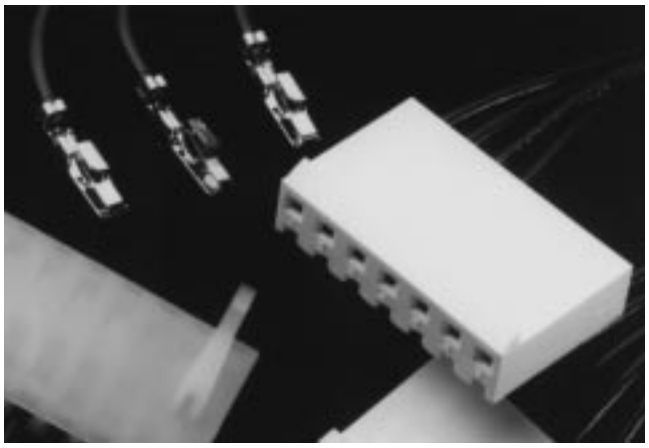

- **Recognized under the Component Program of Underwriters Laboratories Inc., File No. E28476**
- **Certified by Canadian Standards Association, File No. LR7189**

The AMP SL-156 connectors shown on the following pages are designed to mate with .045 [1.14] square or round post headers or staked posts on .156 [3.96] centers.

The wire-to-board connector is a two-piece connector system with the wire crimped to the contact, then inserted into the housing. This product mates with the MTA-156 flat, polarized and friction lock header, or staked posts (**not** MTA-156 shrouded headers).

Performance Data:

Voltage Rating — 250 vac

Current Rating — 10 amp max. at 250 vac

Low-Level Resistance — 3.0 mΩ max. initial

Dielectric Withstanding Voltage — 2000 vac/1 min.

Insulation Resistance — 1000 MΩ min. initial

Operating Temperature — −55° C to +105° C

Technical Documents:

Product Specifications
108-1049, 108-1049-1, 108-1049-2

Application Specification
114-1021

The Large Insulation Diameter (LID) Contacts and Housings are for use in applications where wire insulation exceeds .105 [2.67].

This chart represents only the housing and header combinations. You also need to consider the plating on the contacts and headers. Gold contact with gold headers and tin contacts with tin headers.

Headers

Housings * Standard	LID	640383	640384	640385	640387	640388	640389	640445	641202	641203	641204	641207	641208	641209	641210	644322	644611	644612	644613	644614	644615	644616	644617	644627	644628	644629	644630	644631	644632	644633	644749	644750
640250	647401	Y	Y	Y	N	Y	Y	Y	Y	Y	Y	N	Y	Y	Y	Y	Y	Y	Y	N	Y	Y	Y	Y	Y	Y	N	Y	Y	Y	Y	Y
640251	647400	Y	Y	Y	Y	Y	Y	Y	Y	Y	Y	Y	Y	Y	Y	Y	Y	Y	Y	Y	Y	Y	Y	Y	Y	Y	Y	Y	Y	Y	Y	Y
770849	647402	Y	Y	Y	N	Y	Y	Y	Y	Y	Y	N	Y	Y	Y	Y	Y	Y	Y	N	Y	Y	Y	Y	Y	Y	N	Y	Y	Y	Y	Y

Headers

Housings * Standard	LID	644751	644752	644753	644754	644755	644756	644757	644758	644759	644760	644761	644762
640250	647401	Y	Y	Y	Y	N	Y	Y	Y	Y	Y	Y	N
640251	647400	Y	Y	Y	Y	Y	Y	Y	Y	Y	Y	Y	Y
770849	647402	Y	Y	Y	Y	N	Y	Y	Y	Y	Y	Y	N

Headers

Housings * Standard	LID	647210	647211	647212	647213	647214	647215	647216	647217	647218	647219	647227	647228	647229	647230	647231	647232	647233	647234	647260	647261	647262
640250	647401	Y	Y	N	Y	Y	Y	Y	Y	Y	N	Y	Y	Y	N	Y	Y	Y	N	Y	Y	Y
640251	647400	Y	Y	Y	Y	Y	Y	Y	Y	Y	Y	Y	Y	Y	Y	Y	Y	Y	Y	Y	Y	Y
770849	647402	Y	Y	N	Y	Y	Y	Y	Y	Y	N	Y	Y	Y	N	Y	Y	Y	N	Y	Y	Y

*** Select contact plating to match header plating**

For complete product information, order Catalog 82056

Crimp Contacts and Keying Plugs

Contacts

Material and Finish:

.012 [0.3] bright tin plated brass or phosphor bronze; .012 [0.3] pre-tin brass; or .012 [0.3] brass or phosphor bronze with .000030 [0.00076] gold over nickel (see chart)

- All tin-plated contacts are post lubricated to resist fretting corrosion
- Recommended insulation diameter is .105 [2.67] max.
- Wire range is 18-24 AWG [0.9-0.2 mm²]

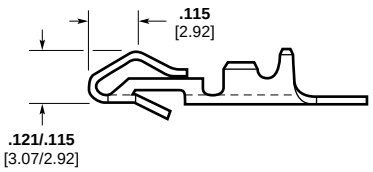

A
High Force
(6.5 Amp Max. Current Rating)

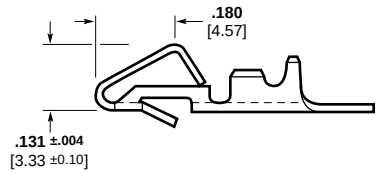

B
Low Force
(6.5 Amp Max. Current Rating)

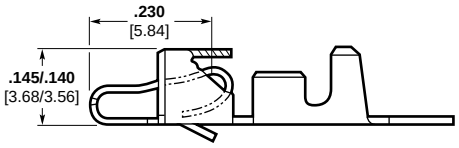

C
Hooded (Dual Wipe)
(10 Amp. Max. Current Rating)

Contact	Material and Finish	Part Numbers	
		Strip	Loose Piece
A	brass, bright tin plated	640252-1	640706-1
	brass, pre-tin plated	640252-2	640706-2
B	brass, bright tin plated	350980-1	640707-1
	brass, pre-tin plated	350980-2	—
	brass, gold plated	350980-3	770258-1
C	phosphor bronze, bright tin plated	770476-1	770522-1
	phosphor bronze, gold plated	770476-2	770522-2

Application Note:

Part Number 640252 has a higher mating and un-mating force than **Part Number** 350980 and is recommended to be used only in housings with 1 through 12 positions. **Part Number** 350980 can be used in any size housing but is recommended to be used in housings with 13 through 24 positions. **Part Number** 770476 is recommended for use in any size housing. Its mating force is similar to **Part Number** 350980 while unmating force is similar to 640252.

For housings, see pages 2216 and 2218.

Application Tooling

Extraction Tool
Part Number 90471-1

Loose Piece Contacts:

PRO-CRIMPER II Hand Tool
Part Number 58614-1 (408-4228)
[For Field Service Use Only]

CERTI-CRIMP Hand Tool
Contact Technical Support Center

Strip Contacts:

AMP-O-LECTRIC Model "G" Termination Machine* Applicator 466468-4
(Request Catalog 65828)

AMP-O-LECTRIC Model "K" Termination Machine* Applicator 466468-2

AMP-O-MATIC Stripper-Crimper Machine* SCA 466947-1 or 567828-1 (with CQM)
(Request Catalog 65004)

AMPOMATOR CLS IV+ Lead-Making Machine* Applicator 466468-1
(Request Catalog 82659)

*Requires applicators. For part numbers, call the Technical Support Center at **1-800-522-6752**

Keying Plugs

Material:

UL94V-2 rated, type 6/6 nylon, natural color

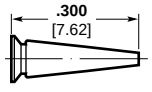

Keying Plug
Part Number 640254-1

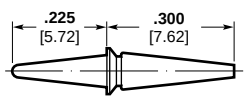

Keying Pin
Part Number 640255-1

For complete product information, order Catalog 82056

Products for Industrial & Commercial Applications
Dimensions are shown for reference purposes only.
Dimensions are in inches and millimeters unless otherwise specified. Values in brackets are metric equivalents.
Specifications subject to change.
Technical Support Center
1-800-522-6752
www.tycoelectronics.com

Standard Housings — Wire-to-Board

Housings

Material:

UL94V-0 rated, nylon, white

Notes:
1. Accepts either .045 [1.14] square or round posts. Housings mate with flat and friction lock headers, or staked posts on .156 [3.96] centers.
2. Housings without ramp, with polarizing tab, available upon request. Minimums may apply.
3. Recommend contact: Part No. 640252 for 1 thru 12 positions; Part No. 350980 for 13 thru 24 positions; Part No. 770476 for 1 thru 24 positions.
4. These parts are End-to-End stackable.

For contacts, see page 2215.

For mateability options, see matrix on page 2214.

For mating half visuals, for connectors with locking ramp, see pages 2207 thru 2210 (2208 and 2209 Front Bend Headers only.)

For mating half visuals, for connectors without locking ramp, see pages 2207 thru 2210.

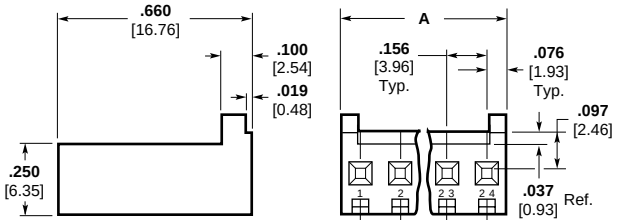

With Locking Ramp/With Polarizing Tabs

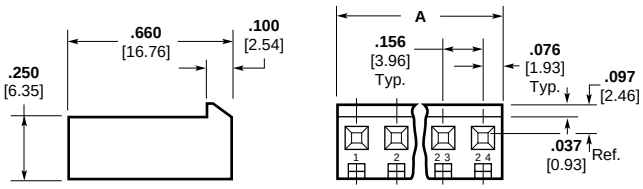

With Locking Ramp/Without Polarizing Tabs

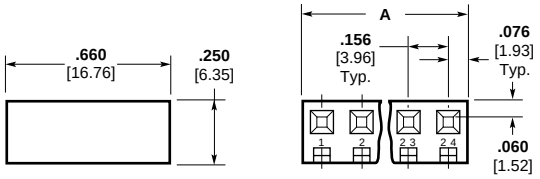

Without Locking Ramp/Without PolarizingTabs

No. of Positions	Dim. A	With Ramp/ With Tabs	With Ramp/ Without Tabs	Without Ramp/ Without Tabs
1	**.152** 3.86	—	640250-1	640251-1
2	**.308** 7.82	770849-2	640250-2	640251-2
3	**.465** 11.81	770849-3	640250-3	640251-3
4	**.621** 15.77	770849-4	640250-4	640251-4
5	**.777** 19.74	770849-5	640250-5	640251-5
6	**.933** 23.70	770849-6	640250-6	640251-6
7	**1.090** 27.69	770849-7	640250-7	640251-7
8	**1.246** 31.65	770849-8	640250-8	640251-8
9	**1.402** 35.61	770849-9	640250-9	640251-9
10	**1.558** 39.57	1-770849-0	1-640250-0	1-640251-0
11	**1.715** 43.56	1-770849-1	1-640250-1	1-640251-1
12	**1.871** 47.52	1-770849-2	1-640250-2	1-640251-2

No. of Positions	Dim. A	With Ramp/ With Tabs	With Ramp/ Without Tabs	Without Ramp/ Without Tabs
13	**2.027** 51.49	1-770849-3	1-640250-3	1-640251-3
14	**2.183** 55.45	1-770849-4	1-640250-4	1-640251-4
15	**2.340** 59.44	1-770849-5	1-640250-5	1-640251-5
16	**2.496** 63.40	1-770849-6	1-640250-6	1-640251-6
17	**2.652** 67.36	1-770849-7	1-640250-7	1-640251-7
18	**2.808** 71.32	1-770849-8	1-640250-8	1-640251-8
19	**2.965** 75.31	1-770849-9	1-640250-9	1-640251-9
20	**3.121** 79.27	2-770849-0	2-640250-0	2-640251-0
21	**3.277** 83.24	2-770849-1	2-640250-1	2-640251-1
22	**3.433** 87.20	2-770849-2	2-640250-2	2-640251-2
23	**3.590** 91.19	2-770849-3	2-640250-3	2-640251-3
24	**3.746** 95.15	2-770849-4	2-640250-4	2-640251-4

Note: Not for use with LID contacts, shown on page 2217.

For complete product information, order Catalog 82056

Products for Industrial & Commercial Applications
Dimensions are shown for reference purposes only.
Dimensions are in inches and millimeters unless otherwise specified. Values in brackets are metric equivalents.
Specifications subject to change.
Technical Support Center 1-800-522-6752 www.tycoelectronics.com

Housings and Contacts for Large Insulation Diameter (LID) Wire

Housings

Material:

UL 94V-0 rated, nylon, white

Notes:
1. Accepts Standard and LID contacts.
2. Larger opening in housings eases contact insertion when using wires that have large insulation diameters (.100-.112 [2.54-2.84]).
3. Housings are not End-to-End stackable.

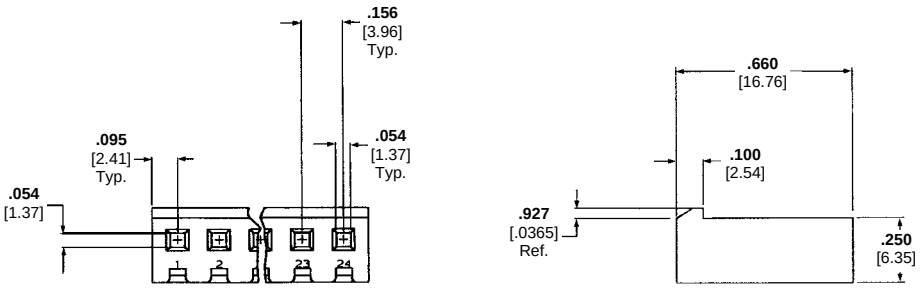

No. of Positions*	Description	Part Numbers Housings with Larger Openings for Oversize Wire
1-24	Without Locking Ramp or Polarization Tabs	647400
	With Locking Ramp and without Polarization Tabs	647401 (shown above)
2-24	With Locking Ramp and Polarization Tabs	647402

*Base Part Number Prefixes and Suffixes indicate number of contact positions, e.g. 2 Position = 0-xxxxxx-2 and 12 Position = 1-xxxxxx-2

Contacts

Material and Finish:

.012 [0.3] bright tin plated phosphor bronze; .012 [0.3] phosphor bronze with .000030 [0.00076] gold over nickel (see chart)

- All tin-plated contacts are post lubricated to resist fretting corrosion
- Maximum insulation diameter is .112 [2.85].
- Wire range is 18-24 AWG [0.9-0.2 mm²] and a limited 16 AWG (1.29-1.42 mm²) (2550-2800 CMA)

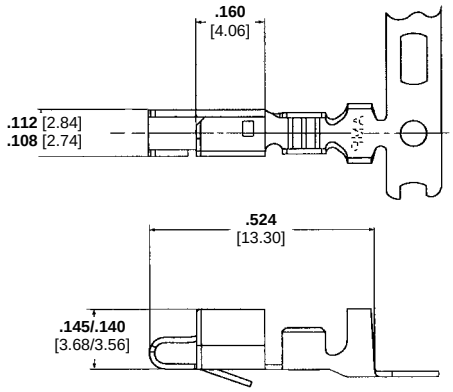

Hooded (Dual Wipe)
(10 Amp Max. Current Rating)

Product Specifications:

108-1049-1 and 108-1049-2

Application Tooling

AMP-O-LETRIC Model "G" Termination Machine*
Applicator 1385048-3 [18-24 AWG]
Applicator 1385219-3 [16 AWG]

AMP-O-LECTRIC Model "K" Termination Machine*
Applicator 1385048-2 [18-24 AWG]
Applicator 1385219-3 [16 AWG]

*For additional part numbers and information contact the Technical Support Center at 1-800-522-6752

Wire Size	Material	Plating	Part Numbers For LID* Wire	
			Strip	Loose Piece
18-24 AWG	Phosphor Bronze	Tin	647406-1	647409-1
		Gold	647406-2	647409-2
16 AWG (2550-2800 CMA only)	Phosphor Bronze	Tin	647466-1	647485-1
		Gold	647466-2	647485-2

*Large Insulation Diameter (.100-.112 [2.54-2.84])
Notes: 1. For information on application tooling, call the Technical Support Center 1-800-522-6752.
2. Can **not** be used with Standard SL-156 Housings, must be used with LID Housings only.

Products for Industrial & Commercial Applications
Dimensions are shown for reference purposes only.
Dimensions are in inches and millimeters unless otherwise specified. Values in brackets are metric equivalents.
Specifications subject to change.
Technical Support Center 1-800-522-6752
www.tycoelectronics.com

Housings With Through-Board Latch

Housings

Material:

UL94V-2 rated, nylon, white

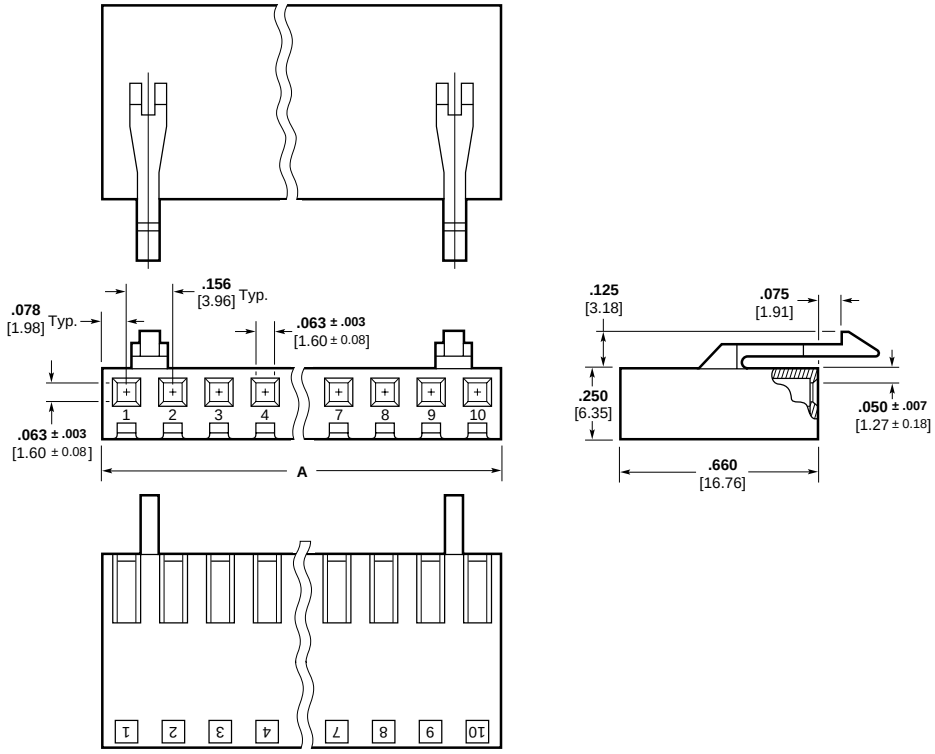

Mates with .045 square or round staked posts only.

For contacts, see page 2215.

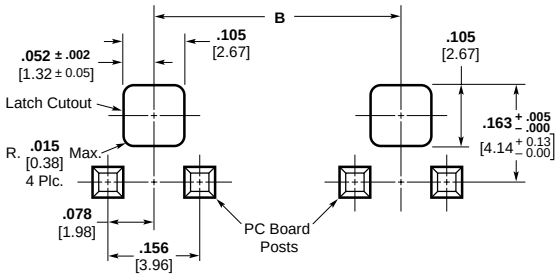

Recommended PC Board Cutout for .062 [1.57] Thick PC Board

No. of Positions	Dimensions A	Dimensions B	Latch Location Centered Between Pos.	Part Number
2	**.312** 7.92	—	1 and 2	770894-2
3	**.468** 11.89	—	1 and 2	770894-3
4	**.624** 15.85	—	2 and 3	770894-4
5	**.780** 19.81	—	2 and 3	770894-5
6	**.936** 23.77	—	3 and 4	770894-6
7	**1.092** 27.74	—	3 and 4	770894-7
8	**1.248** 31.70	—	4 and 5	770894-8
9	**1.404** 35.66	**1.092** 27.74	1 and 2 & 8 and 9	770894-9
10	**1.560** 39.62	**1.248** 31.70	1 and 2 & 9 and 10	1-770894-0

For complete product information, order Catalog 82056

Products for Industrial & Commercial Applications
Dimensions are shown for reference purposes only.
Dimensions are in inches and millimeters unless otherwise specified. Values in brackets are metric equivalents.
Specifications subject to change.
Technical Support Center 1-800-522-6752 www.tycoelectronics.com

MTA Connectors Approved Wire Listing

Critical to the success of a wire-to-board application is the proper wire selection. The chart identifies wires that have been evaluated and approved by the product engineering section. If you plan to use a wire not on the approved list, please submit a sample 12" length of wire to Tyco Electronics for evaluation.

MTA-100 Connectors	Wall	Approved Wire AWG
UL 1007 PVC Insulation	.015" [0.381]	22, 24, 26, 28
UL 1061 Semi-Rigid PVC Insulation	.009" [0.229]	22, 24, 26, 28
UL 1095 Semi-Rigid PVC Insulation	.012" [0.305]	24
UL 1371 TEFLON Insulation — TFE	.006" [0.152]	22, 26
UL 1429 Irradiated PVC — X.L.P.V.C.	.010" [0.254]	22, 24, 26, 28
UL 2464 PVC	.013" [0.330]	24
UL 3265 Irradiated Polyethylene — X.L.P.E.	.010" [0.254]	22, 24
UL 3266 Irradiated Polyethylene — X.L.P.E.	.015" [0.381]	22, 24
MIL-W-16878, Type B-PVC Insulation	.010" [0.254]	22
UL 1213 TEFLON Insulation—T.F.E.	.010" [0.254]	22
MTA-156 Connectors		
UL 1007 PVC Insulation	.015" [0.381]	18, 20, 22, 24
UL 1061 Semi-Rigid PVC Insulation	.009" [0.229]	18, 20, 22, 24
UL 1180 TEFLON Insulation — T.F.E.	.015" [0.381]	22
UL 1213 TEFLON Insulation — T.F.E.	010" [0.254]	18, 22, 24
UL 1316 PVC/Nylon Wall	.015" [0.381]	18, 22
UL 1429 Irradiated PVC — X.L.P.V.C.	.010" [0.254]	18, 20, 22, 24
UL 1430 Irradiated PVC — X.L.P.V.C.	.015" [0.381]	18, 20, 22, 24
UL 1569 PVC	.015" [0.381]	18
UL 3265 Irradiated Polyethylene — X.L.P.E.	.010" [0.254]	22
UL 3266 Irradiated Polyethylene — X.L.P.E.	.015" [0.381]	18, 20, 22, 24

Note: When selecting approved wire styles noted on this list, the MTA Application Specifications guidelines must be followed. Also, due to wire variations in insulation wall thickness, hardness and wire stranding we would recommend evaluating the wire selected before final application approval.

AWG Metric Equivalents

18 — 0.8 – 0.9 mm^2
20 — 0.5 – 0.6 mm^2
22 — 0.3 – 0.4 mm^2
24 — 0.2 mm^2
26 — 0.12 – 0.15 mm^2
28 — 0.08 – 0.09 mm^2

Technical Documents:

Product Specifications
108-1050 — MTA-100 Connectors
108-1050-1 — MTA-100 Posted Connectors
108-1051 — MTA-156 Connectors
108-1219 — MTA-156 Quad Connector System
108-1065 — MTA-156 Posted Connectors
108-1058 — MTA-156 Card Edge Connectors

Application Specifications
114-1019 — MTA-100 Connectors
114-1020 — MTA-156 Connectors
114-1031 — MTA-100 Ribbon Cable Connector Assembly
114-1032 — MTA-156 Ribbon Cable Connector Assembly
114-1048 — MTA-156 Quad Connector

MTA-100 Ribbon Cable Preparation

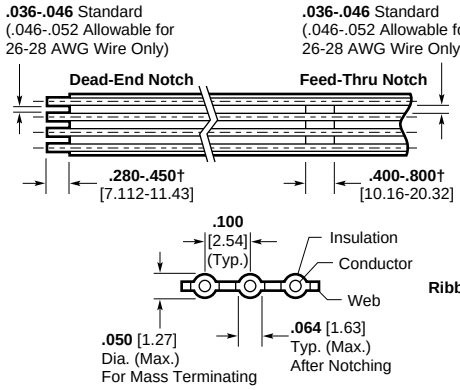

MTA-156 Ribbon Cable Preparation

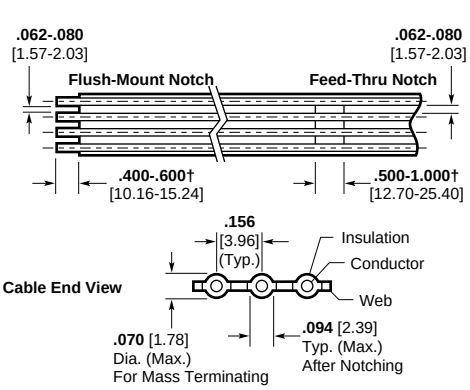

Ribbon Cable End View

† The dimensions shown represent the recommended minimum and maximum for notches; the actual dimension will depend on your application requirements.

Notes:
1. Cable shall be notched, as indicated in the individual ribbon cable connector assembly drawing, according to the requirements specified in these figures. Conductor shall not be exposed after notching, nor shall individual wire stands be cut or nicked.
2. U.L. Style #2651 ribbon cable is approved for use with MTA-100 and MTA-156 connectors per Application Specification 114-1031 and 114-1032.

Ribbon Cable

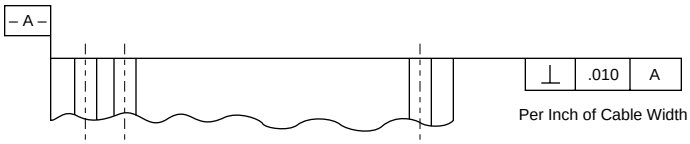

Cable Edge-to-End Alignment (Ends of the cable shall be prepared as indicated in this figure)

Notes:
1. For MTA Cable Assemblies Contact US Engineering Cable Assembly Group.
2. For IDC Cable, see pages 2220 thru 2223.

For complete product information, order Catalog 82056

Products for Industrial & Commercial Applications

Dimensions are shown for reference purposes only.

Dimensions are in inches and millimeters unless otherwise specified. Values in brackets are metric equivalents.

Specifications subject to change.

Technical Support Center
1-800-522-6752
www.tycoelectronics.com

Product Facts

- **Compatible with a variety of Insulation Displacement Connectors**
- **Available on .025 [0.63], .0394 [1.00], .050 [1.27], .100 [2.54] and .156 [3.96] centerline**
- **Color code edge mark on conductor #1**
- **Gray flame retardant flexible PVC insulation**
- **Insulation rated for temperature of -20°C to +105°C**
- **Recognized under the Component Program of Underwriters Laboratories Inc., File No. E53793**

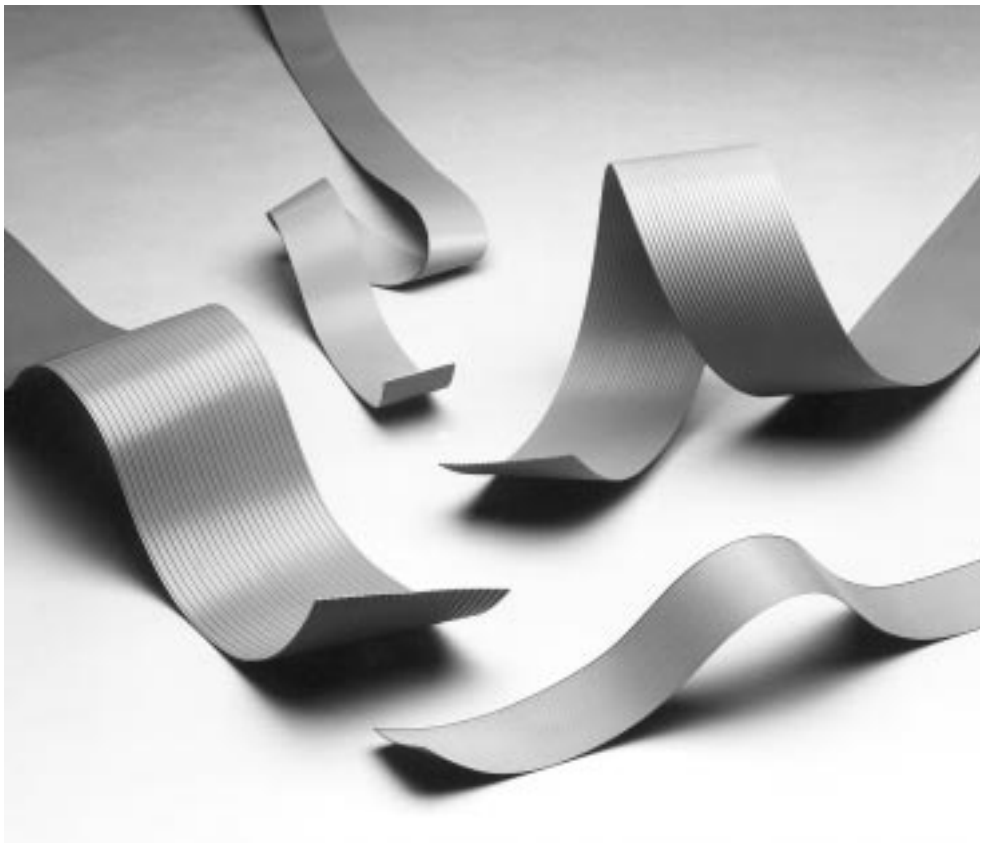

Madison Cable Corporation has an expanding array of planar PVC insulated product designed for compatibility with a variety of Insulation Displacement Connectors. AMP IDC terminations have been proven to offer a quick, reliable, cost effective cabling system which can be automated.

The .100 [2.54] centerline cable is available in 28 to 22 AWG, either as tinned or as overcoated tinned wire, in 2 to 28 conductors.

The .156 [3.96] centerline is available in 22 AWG and 18 AWG, either as tinned or overcoated tinned, in 2 to 24 conductors.

IDC Ribbon Cable is produced to tighter standards than usually required for high yield insulation displacement terminations. The extra precision offers trouble free operation in fully automatic stripping, notching and termination equipment.

For complete product information, order Catalog 82056

Products for Industrial & Commercial Applications
Dimensions are shown for reference purposes only.
Dimensions are in inches and millimeters unless otherwise specified. Values in brackets are metric equivalents.
Specifications subject to change.
Technical Support Center
1-800-522-6752
www.tycoelectronics.com

.100 [2.54] Centerline, IDC Ribbon Cable, PVC Insulation

Product Specifications:

Voltage Rating — 300 Volts
UL Recognized — AWM Style 2651
CSA — Available on request

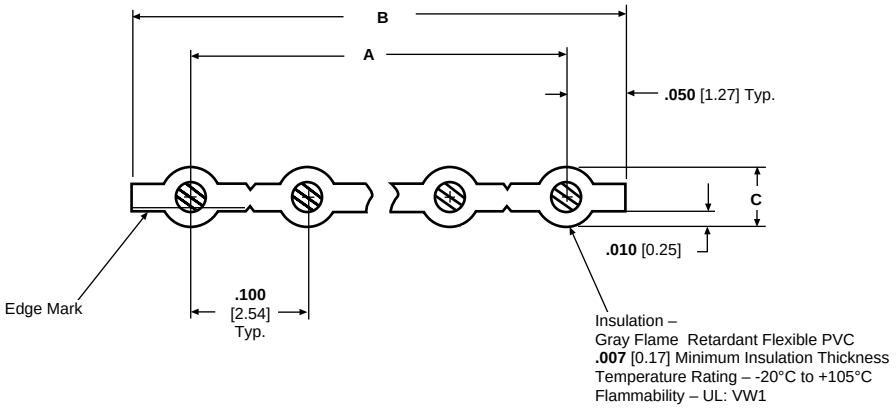

No. of Conductors	Dimensions A	B	C	Part Numbers
28 AWG 7/36 Tinned Copper				
2	0.100 [2.54]	0.200 [5.08]	0.035 [.89]	02WDY00006
5	0.400 [10.16]	0.500 [12.70]	0.035 [.89]	05WDY00006
10	0.900 [22.86]	1.000 [25.40]	0.035 [.89]	10WDY00006
15	1.400 [35.56]	1.500 [38.10]	0.035 [.89]	15WDY00006
20	1.900 [48.26]	2.000 [50.80]	0.035 [.89]	20WDY00006
25	2.400 [60.96]	2.500 [63.50]	0.035 [.89]	25WDY00006
28	2.700 [68.58]	2.800 [71.12]	0.035 [.89]	28WDY00006
28 AWG 7/36 Overcoated Tinned Copper				
2	0.100 [2.54]	0.200 [5.08]	0.035 [.89]	02WDY00007
5	0.400 [10.16]	0.500 [12.70]	0.035 [.89]	05WDY00007
10	0.900 [22.86]	1.000 [25.40]	0.035 [.89]	10WDY00007
15	1.400 [35.56]	1.500 [38.10]	0.035 [.89]	15WDY00007
20	1.900 [48.26]	2.000 [50.80]	0.035 [.89]	20WDY00007
25	2.400 [60.96]	2.500 [63.50]	0.035 [.89]	25WDY00007
28	2.700 [68.58]	2.800 [71.12]	0.035 [.89]	28WDY00007
26 AWG 7/34 Tinned Copper				
2	0.100 [2.54]	0.200 [6.08]	0.039 [.99]	02WEY00008
5	0.400 [10.16]	0.500 [12.70]	0.039 [.99]	05WEY00008
10	0.900 [22.86]	1.000 [25.40]	0.039 [.99]	10WEY00008
15	1.400 [35.56]	1.500 [38.10]	0.039 [.99]	15WEY00008
20	1.900 [48.26]	2.000 [50.80]	0.039 [.99]	20WEY00008
25	2.400 [60.96]	2.500 [63.50]	0.039 [.99]	25WEY00008
28	2.700 [68.58]	2.800 [71.12]	0.039 [.99]	28WEY00008
26 AWG 7/34 Overcoated Tinned Copper				
2	0.100 [2.54]	0.200 [5.08]	0.039 [.99]	02WEY00007
5	0.400 [10.16]	0.500 [12.70]	0.039 [.99]	05WEY00007
10	0.900 [22.86]	1.000 [25.40]	0.039 [.99]	10WEY00007
15	1.400 [35.56]	1.500 [38.10]	0.039 [.99]	15WEY00007
20	1.900 [48.26]	2.000 [50.80]	0.039 [.99]	20WEY00007
25	2.400 [60.96]	2.500 [63.50]	0.039 [.99]	25WEY00007
28	2.700 [68.58]	2.800 [71.12]	0.039 [.99]	28WEY00007

No. of Conductors	Dimensions A	B	C	Part Numbers
24 AWG 7/32 Tinned Copper				
2	0.100 [2.54]	0.200 [5.08]	0.044 [1.12]	02WFY00006
5	0.400 [10.16]	0.500 [12.70]	0.044 [1.12]	05WFY00006
10	0.900 [22.86]	1.000 [25.40]	0.044 [1.12]	10WFY00006
15	1.400 [35.56]	1.500 [38.10]	0.044 [1.12]	15WFY00006
20	1.900 [48.26]	2.000 [50.80]	0.044 [1.12]	20WFY00006
25	2.400 [60.96]	2.500 [63.50]	0.044 [1.12]	25WFY00006
28	2.700 [68.58]	2.800 [71.12]	0.044 [1.12]	28WFY00006
24 AWG 7/32 Overcoated Tinned Copper				
2	0.100 [2.54]	0.200 [5.08]	0.044 [1.12]	02WFY00007
5	0.400 [10.16]	0.500 [12.70]	0.044 [1.12]	05WFY00007
10	0.900 [22.86]	1.000 [25.40]	0.044 [1.12]	10WFY00007
15	1.400 [35.56]	1.500 [38.10]	0.044 [1.12]	15WFY00007
20	1.900 [48.26]	2.000 [50.80]	0.044 [1.12]	20WFY00007
25	2.400 [60.96]	2.500 [63.50]	0.044 [1.12]	25WFY00007
28	2.700 [68.58]	2.800 [71.12]	0.044 [1.12]	28WFY00007
22 AWG 7/30 Tinned Copper				
2	0.100 [2.54]	0.200 [5.08]	0.051 [1.30]	02WGY00006
5	0.400 [10.16]	0.500 [12.70]	0.051 [1.30]	05WGY00006
10	0.900 [22.86[	1.000 [25.40]	0.051 [1.30]	10WGY00006
15	1.400 [35.56]	1.500 [38.10]	0.051 [1.30]	15WGY00006
20	1.900 [48.26]	2.000 [50.80]	0.051 [1.30]	20WGY00006
25	2.400 [60.96]	2.500 [63.50]	0.051 [1.30]	25WGY00006
28	2.700 [68.58]	2.800 [71.12]	0.051 [1.30]	28WGY00006
22 AWG 7/30 Overcoated Tinned Copper				
2	0.100 [2.54]	0.200 [6.08]	0.051 [1.30]	02WGY00007
5	0.400 [10.16]	0.500 [12.70]	0.051 [1.30]	05WGY00007
10	0.900 [22.86]	1.000 [25.40]	0.051 [1.30]	10WGY00007
15	1.400 [35.56]	1.500 [38.10]	0.051 [1.30]	15WGY00007
20	1.900 [48.26]	2.000 [50.80]	0.051 [1.30]	20WGY00007
25	2.400 [60.96]	2.500 [63.50]	0.051 [1.30]	25WGY00007
28	2.700 [68.58]	2.800 [71.12]	0.051 [1.30]	28WGY00007

Other Conductor Counts Available on Request.

Contact Madison Cable 1-877-Madison (1-877-623-4766) for engineering questions or for order placement of this cable.

.156 [3.96] Centerline, Flat Ribbon Cable, PVC Insulation

Product Specifications:

Voltage Rating — 300 Volts
UL Recognized — AWM Style 2651
CSA — Available on request

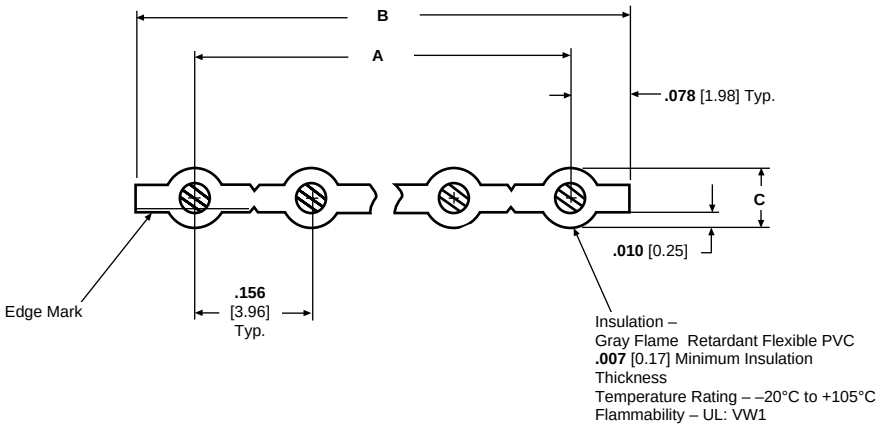

No. of Conductors	Dimensions A	B	C	Part Numbers
22 AWG 7/30 Tinned Copper				
2	0.156 [3.96]	0.312 [7.92]	0.051 [1.30]	02WGY00008
5	0.624 [15.85]	0.780 [19.81]	0.051 [1.30]	05WGY00008
10	1.404 [35.66]	1.560 [39.62]	0.051 [1.30]	10WGY00008
15	2.184 [55.47]	2.340 [59.44]	0.051 [1.30]	15WGY00008
20	2.964 [75.29]	3.120 [79.25]	0.051 [1.30]	20WGY00008
24	3.588 [91.14]	3.744 [95.10]	0.051 [1.30]	24WGY00008
22 AWG 7/30 Overcoated Tinned Copper				
2	0.156 [3.96]	0.312 [7.92]	0.051 [1.30]	02WGY00009
5	0.624 [15.85]	0.780 [19.81]	0.051 [1.30]	05WGY00009
10	1.404 [35.66]	1.560 [39.62]	0.051 [1.30]	10WGY00009
15	2.184 [55.47]	2.340 [59.44]	0.051 [1.30]	15WGY00009
20	2.964 [75.29]	3.120 [79.25]	0.051 [1.30]	20WGY00009
24	3.588 [91.14]	3.744 [95.10]	0.051 [1.30]	24WGY00009
18 AWG 7/26 Tinned Copper				
2	0.156 [3.96]	0.312 [7.92]	0.068 [1.73]	02WJY000010
5	0.624 [15.85]	0.780 [19.81]	0.068 [1.73]	05WJY000010
10	1.404 [35.66]	1.560 [39.62]	0.068 [1.73]	10WJY000010
15	2.184 [55.47]	2.340 [59.44]	0.068 [1.73]	15WJY000010
20	2.964 [75.29]	3.120 [79.25]	0.068 [1.73]	20WJY000010
24	3.588 [91.14]	3.744 [95.10]	0.068 [1.73]	24WJY000010
18 AWG 7/26 Overcoated Tinned Copper				
2	0.156 [3.96]	0.312 [7.92]	0.068 [1.73]	02WJY00009
5	0.624 [15.85]	0.780 [19.81]	0.068 [1.73]	05WJY00009
10	1.404 [35.66]	1.560 [39.62]	0.068 [1.73]	10WJY00009
15	2.184 [55.47]	2.340 [59.44]	0.068 [1.73]	15WJY00009
20	2.964 [75.29]	3.120 [79.25]	0.068 [1.73]	20WJY00009
24	3.588 [91.14]	3.744 [95.10]	0.068 [1.73]	24WJY00009

Other Conductor Counts Available on Request.

Contact Madison Cable 1-877-Madison (1-877-623-4766) for engineering questions or for order placement of this cable.

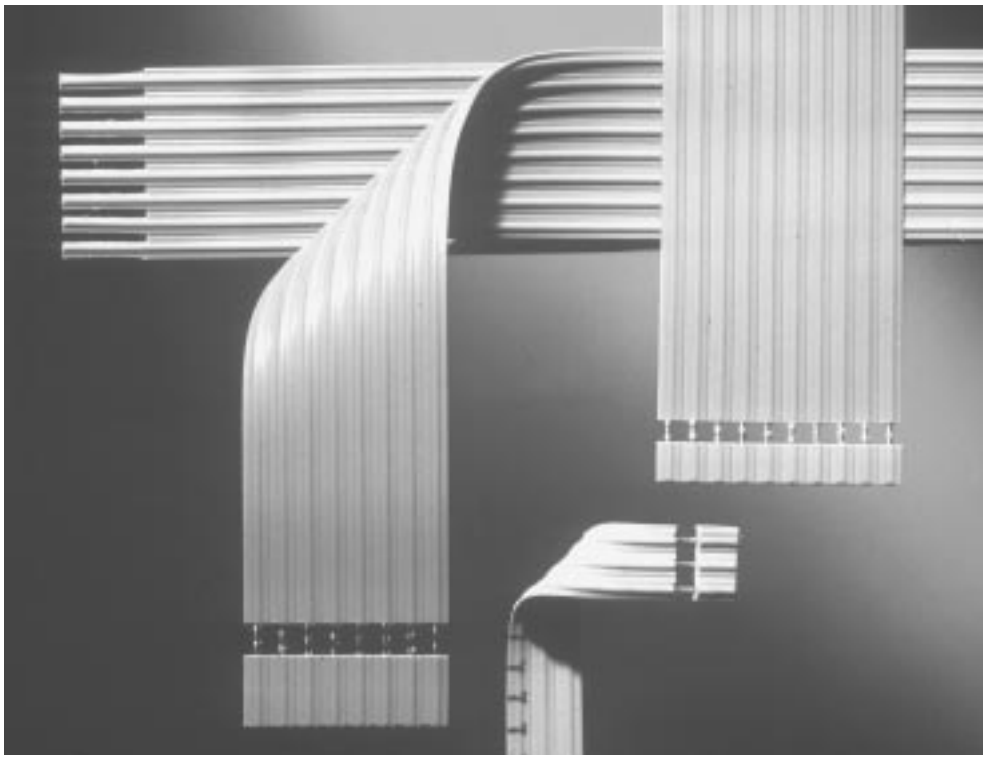

In addition to bulk cable, the AMP Cable Assembly Group offers Prepared Cable for the .100 [2.54] and .156 [3.96] centerline cables. This can be in the form of prenotched cable on reels or cut to length cable segments.

Prenotched 250 foot reels of cable can be produced with notches at varying increments or repeating all along the cable. The maximum width of these cables is 20 conductor for the .100 [2.54] centerline and 13 conductor for the .156 [3.96] centerline.

Prepared Cable is also available with a Strip and Retain feature allowing the cable assembly to be soldered directly to the PC Board. This saves space and cost and reduces spare parts inventory. Strip & Retain on both ends is used in family board applications to maintain the electrical connection when the PC Board is separated into smaller boards after soldering. Widths are limited to 20 conductors for the .100 [2.54] centerline and 13 conductors for the .156 [3.96] centerline. However, multiple cables can be placed side-by-side in a single connector. For other styles and configurations contact the product engineer or product manager.

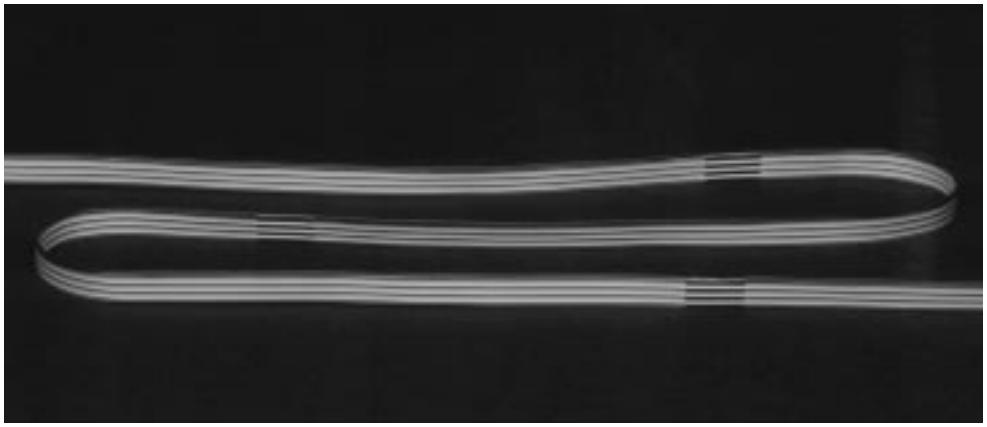

For complete product information, order Catalog 82056

Tooling Options

One-At-A-Time Termination Tooling Part Numbers

Note: Max. Insulation Outside Diameter Wire: .060 [1.52] for MTA-100 Connectors/.095 [2.41] for MTA-156 Connectors

MTA Connector Assembly		Interchangeable Head: Used with: Manual Hand Tool 58074-1, Air Hand Tool 58075-1, Air Bench Mount Tool 58338-1, Electric Bench Machine 931800-1	Interchangeable Head and Loose-Piece Feed Track: Used with: Air Bench Mount Tool 58338-1, Electric Bench Machine 931800-1	Interchangeable Head and Tape Feed Track: Used with: Air Bench Mount Tool 58338-1, Electric Bench Machine 931800-1	Special Applicator	T-Handle[4] Maintenance Tool
MTA-100 Connector	Closed End	58246-1 (Standard)* 58246-2 (Ext Wear) 58246-3 (Ribbon Cable)	933567-1	853546-1 & 853542-1 (Base)	466728-1	59803-1
	Feed Thru	58442-1	—	—	—	59803-1
	Posted (Closed-End)	58638-1	—	—	—	59803-1
MTA-156 Connector	Closed End	58247-1 (Standard)** 58247-2 (Ext Wear) 58247-3 (Ribbon Cable)	933568-1	853547-1 & 853542-1 (Base)	466727-1	59804-1
	Feed Thru	58443-1	—	—	—	59804-1
	Posted (Closed-End)	58082-1	—	—	—	59804-1
MTA-156 Card Edge	Closed End	58061-1	—	—	567020-1	59839-1
MTA-156 Quad	Closed End	58392-1	—	—	—	59804-1

*Repair Kit 856600-1 **Repair Kit 856600-2

Notes:
1. A repair kit consists of a cam, a feed-slide sub-assembly and a locating pawl. Repair kits can be made available for other interchangeable heads. Consult Tyco Electronics.
2. Standard modular heads 58246-1 and 58247-1 are recommended for low volume use.
3. Extended wear modular heads 58246-2 and 58247-2 are recommended for high volume use.
4. T-Handle Maintenance Tools are for maintenance (field) use only. They are not recommended for production.
5. Some Manual Hand Tool Assemblies are available:
   a. Order 58579-1, comprised of Head 58246-1 with Manual Hand Tool 58074-1.
   b. Order 58580-1, comprised of Head 58247-1 with Manual Hand Tool 58074-1.
   c. Order 58639-1, comprised of Head 58638-1 with Manual Hand Tool 58074-1.

Mass Termination Tooling Part Numbers

Note: Max. Insulation Outside Diameter Wire: .050 [1.27] for MTA-100 Connectors/.070 [1.78] for MTA-156 Connectors

MTA Connector Assembly		Interchangeable Head: Part Number	Interchangeable Head: Used With	Harness Board Holding Fixture: Part Number	Harness Board Holding Fixture: Used With: Applicator Assembly	Harness Board Holding Fixture: Used With: Tooling Assembly	Interchangeable Head and Tape Feed Track: Part Number	Interchangeable Head and Tape Feed Track: Used With
MTA-100 Connector	Closed End	—	—	58242-1 58242-3	— 58575-1	Manual Bench Tool 58024-1 and Tooling Assembly 58039-1	854175-1 & 854200-1 (Base)	312522-1
	Feed Thru	58644-1 (Discrete Wire)† 58644-2 (Notched Cable)†	58074-1 (Man Hd Tl)	58243-1 58243-3	— 58575-1		—	—
	Closed End (Posted)	—	—	58635-1	58575-1		—	—
	Feed Thru (Posted)	—	—	58636-1	58575-1		—	—
MTA-156 Connector	Closed End	—	—	58244-1 58244-3	— 58576-1	Manual Bench Tool 58024-1 and Tooling Assembly 58040-1	854176-1 & 854200-1 (Base)	312522-1
	Feed Thru	58646-1 (Discrete Wire)†† 58646-2 (Notched Cable)††	58074-1 (Man Hd Tl)	58245-1 58245-3	— 58576-1		—	—
	Card Edge	—	—	59848-1 59848-3	— 58576-1		—	—
	Closed End (Posted)	—	—	58009-1 58009-2	— 58576-1		—	—
	Feed Thru (Posted)	—	—	58010-2	58576-1		—	—
MTA-156 Quad	Closed End	— —	— —	58244-1 58244-3	— 58576-1	Manual Bench Tool 58024-1 and Tooling Assy 58040-1	—	—
	Feed Thru	— —	— —	58245-1 58245-3	— 58576-1	58024-1 and Tooling Assy 58040-1	—	—

†2- through 12-positions. ††2- through 8-positions.

Ribbon Cable Notcher Assemblies

Part Number	Description	Used With
854449-2	For use with 26-28 AWG wire (.100 Centerline)	Manual Bench Tool 58024-1
854449-4	For use with 22-28 AWG wire (.100 Centerline)	Air Bench Machine 91112-2
854449-3	For use with 18-24 AWG wire (.156 Centerline)	2700 lb Bench Machine 312522-1 AMP-O-LECTRIC Bench Machine 1-471273-3 (with Conversion Kit 690675-2)

Use Adapter 854468-1 when putting Notcher in the AMP-O-LECTRIC Machine. Use Adapter 854468-2 when putting Notcher in the 2700 lb Air Bench Machine.

For complete product information, order Catalog 82056

Products for Industrial & Commercial Applications
Dimensions are shown for reference purposes only.
Dimensions are in inches and millimeters unless otherwise specified. Values in brackets are metric equivalents.
Specifications subject to change.
Technical Support Center 1-800-522-6752 www.tycoelectronics.com

Tooling Options

One-At-A-Time Termination Tooling (Typical Tooling Combinations)



Manual Hand Tool with Interchangeable Head



Air Hand Tool with Interchangeable Head



Air Bench Mount Tool with Interchangeable Head and Foot Switch



Electric Bench Machine with Interchangeable Head

Power Units

Manual Hand Tool — Pistol Grip Handle
Part Number 58074-1

- Easy to use
- Ratchet control will not release the trigger until it is fully bottomed
- Allows head to be rotated for user convenience

Air Hand Tool — Pistol Grip Pneumatic Handle
Part Number 58075-1

- Light weight
- Operates at air pressure between 40 and 70 psi [2.76 and 4.83 bar]
- Head may be rotated for user convenience

Air Bench Mount Tool — Bench Mount Power Assembly
Part Number 58338-1

- May be mounted with Interchangeable head pointed up or down
- Operated by a foot switch
- Operates at air pressure between 40 and 70 psi [2.76 and 4.83 bar]

Electric Bench Machine — IDC Power Unit
Part Number 931800-1

- All electric: 120 VAC, 60 Hz, 2 A
- Compact, portable and quiet
- Operated by a foot switch



Air Bench Mount Tool with Interchangeable Head and Loose-Piece Feed Track



Electric Bench Machine with Interchangeable Head and Tape Feed Track



AMP-O-LECTRIC Bench Machine with Special Applicator

Interchangeable Heads and Applicators (Refer to page 2227 for part numbers.)

Interchangeable Head

- Terminates one unstripped wire per cycle
- Aligns and holds the connector in place for each termination
- Automatically advances the connector after each termination

Interchangeable Head and Loose-Piece Feed Track

- No special setup required
- Connectors are easily loaded into feed track
- Connectors are fed using a simple spring-loaded pusher

Interchangeable Head and Tape Feed Track

- No special setup required
- Tape-mounted connectors are transferred from product reel to feed track by simply pulling on the free end of the carrier tape
- Connectors are fed using a simple spring-loaded pusher

Special Applicator

- Connectors are easily hand loaded into feed track
- Automatically advances the connector after each termination
- Cannot be cycled until the connector is properly positioned



T-Handle Maintenance Tool

For complete product information, order Catalog 82056

Products for Industrial & Commercial Applications
Dimensions are shown for reference purposes only.
Dimensions are in inches and millimeters unless otherwise specified. Values in brackets are metric equivalents.
Specifications subject to change.
Technical Support Center
1-800-522-6752
www.tycoelectronics.com

Tooling Options

Mass Termination Tooling (Typical Tooling Combinations)



Manual Bench Tool with Applicator and Holding Fixture



Air Harness Tool with Applicator



Air Bench Machine



2700 lb Air Bench Machine with Ribbon Cable Notcher Assembly

Power Units

Manual Bench Tool — Arbor Frame Assembly
Part Number 58024-1

- Applicator and holding fixture can be oriented for operator convenience for closed-end or feed-thru terminations
- Ram height (insertion depth) is easily adjusted
- May be bench mounted

Air Harness Tools — Hand-Held Power Unit with Applicator
Part Number 58575-1 **(MTA-100)**
Part Number 58576-1 **(MTA-156)**

- Applicator can be rotated 360° for orientation with holding fixture
- Insertion depth is easily adjusted
- Operates at air pressure between 75 and 95 psi [5.17 and 6.55 bar]

Air Bench Machine — Pneumatic Unit
Part Number 91112-2

- Operated by a foot switch
- Operates at air pressure between 80 and 90 psi [5.52 and 6.21 bar]
- Not recommended for notching cable with more than 14 conductors

2700 lb Air Bench Machine —
Part Number 312522-1

- Operated by a foot switch
- Capable of exerting 2,700 lb [12,000 N] of force at minimum 80 psi [5.52 bar] air pressure
- May be bench mounted



Manual Bench Tool with Applicator and Tape Feed Track



Ribbon Cable Notcher Assembly

Applicators and Notcher Assemblies

Applicator and Holding Fixture

- Wires are laced into plastic combs for mass termination
- Trims excess wire for closed-end terminations
- Holding fixture may be mounted to a harness board

Applicator and Tape Feed Track

- Tape-mounted connectors are transferred from product reel to feed track by simply pulling on the free end of the carrier tape
- Connectors are fed using a simple spring-loaded pusher
- Feed stop easily adjusted for different connector sizes

Ribbon Cable Notcher Assembly

- Notch cable with up to 28 conductors for .100 centerline, and 24 conductors for .156 centerline
- Pressure plate holds cable in position during notching
- Scrap conveniently removed through a chute with a blast of air from a built-in air valve

For complete product information, order Catalog 82056

Products for Industrial & Commercial Applications
Dimensions are shown for reference purposes only.
Dimensions are in inches and millimeters unless otherwise specified. Values in brackets are metric equivalents.
Specifications subject to change.
Technical Support Center
1-800-522-6752
www.tycoelectronics.com

Tooling Options

Technical Documents

The following is a list of technical documents covering the installation, operation, adjustment, maintenance and repair of MTA application tooling.

Instruction Sheets (IS) provide instructions for assembling or applying the product. They are intended for the Manufacturing Assembler or Operator.

Customer Manuals (CM) provide complete, detailed instructions on the installation, operation, adjustment, maintenance and repair of complex tools and application machines.

Applicator Instructions (AI) are similar to instruction sheets (which cover products and tools), and provide instructions for installation, adjustment and maintenance of applicators used in automatic and semiautomatic machines.

Hand Tools, Power Units & Accessories

Manual Arbor Frame Assembly	58024-1	IS 408-6923	Terminator Assembly, "G" Term	354500-1	CM 409-5842
Ribbon Cable Applicator, .100	58039-1	IS 408-6685	AMP-O-LECTRIC Machine	1-471273-3	CM 409-5128
Ribbon Cable Applicator, .156	58040-1	IS 408-6701	Conversion Kit	690675-2	IS 408-8022
Manual Hand Tool	58074-1	IS 408-6790	Base Assembly	853542-1	IS 408-9636
Air Bench Mount Tool	58338-1	IS 408-9393	Base	854200-1	IS 408-9650
Air Hand Tool (MTA-100)	58575-1	IS 408-4260	Adaptor (AMP-O-LECTRIC Machine)	854468-1	IS 408-9687
Air Harness Tool (MTA156)	58576-1	IS 408-4260	Adaptor (2700 lb Machine)	854468-2	IS 408-9687
T-Handle Maintenance Tool	59803-1	IS 408-7907	Repair Kit	856600-1	IS 408-9745
Air Arbor Frame Assembly	91112-2	IS 408-7763	Repair Kit	856600-2	IS 408-9745
2700 lb Air Bench Machine	312522-1	CM 409-5843	Electric Bench Mount Tool	931800-1	CM 409-5746

One-At-A-Time Temination Tooling

Interchangeable Heads

MTA-100		MTA-156	
58246-1	IS 408-6929	58247-1	IS 408-6930
58246-2	IS 408-9379	58247-2	IS 408-9380
58246-3	IS 408-4147	58247-3	IS 408-4146
58442-1	IS 408-9603	58443-1	IS 408-9607
58638-1	IS 408-4358	58061-1	IS 408-6794
		58082-1	IS 408-6795
		58392-1	IS 408-9450

Interchangeable Head & Loose-Piece Feed Track

MTA-100		MTA-156	
933567-1	IS 408-9435	933568-1	IS 408-9466

Interchangeable Head & Tape Feed Track

MTA-100		MTA-156	
853546-1	IS 408-9636	853547-1	IS 408-9637

Special Applicators

MTA-100		MTA-156	
466728-1	AI 408-8054	466727-1	AI 408-8054
		567020-1	AI 408-8069

Mass Termination Tooling

Holding Fixtures

MTA-100		MTA-156	
58242-1	IS 408-7994	58009-1	IS 408-7995
58242-3	IS 408-7994	58009-2	IS 408-7995
58243-1	IS 408-7994	58010-2	IS 408-7995
58635-1	IS 408-7994	58244-1	IS 408-7995
58636-1	IS 408-7994	58244-3	IS 408-7995
58644-1	IS 408-4406	58245-1	IS 408-7995
58644-2	IS 408-4440	58245-3	IS 408-7995
59844-1	IS 408-7994	58646-1	IS 408-4405
59845-1	IS 408-7994	58646-2	IS 408-4439
59845-3	IS 408-7994	59848-1	IS 408-7995
		59848-3	IS 408-7995

Die Set Assembly

MTA-100		MTA-156	
854175-1	IS 408-9667	854176-1	IS 408-9650

Typical Application Rates

Produce 6-in. [15 cm] Long Jumpers, One 4-Position MTA-100 Connector per End, Discrete Wire

Method	Terminations Per Hour
Manual Hand Tool 58074-1 with Interchangeable Head 58246-1	—
Electric Bench Machine 931800-1 with Interchangeable Head 58246-1	900
Electric Bench Machine 931800-1 with Interchangeable Head and Loose-Piece Feed Track 933567-1	1,100
Electric Bench Machine 931800-1 with Interchangeable Head and Tape Feed Track 853546-1 and 853542-1 (Base)	1,250

Apply One 4-Position MTA-100 Feed-Thru Connector per Assembly, Discrete Wire

Method	Terminations Per Hour
Manual Bench Tool 58024-1 with Applicator and Holding Fixture	650

For further information about tooling call the Technical Support Center 1-800-522-6752

Produce 6-in. [15 cm] Long Jumpers, One 4-Position MTA-100 Connector per End, Ribbon Cable*

Method	Terminations Per Hour
2700 lb Air Bench Machine 312522-1 with Applicator and Tape Feed Track 854175-1 and 854200-1 (Base)	7,500

* Procedure: Mass terminate 12-conductor ribbon cable with three connectors per end. After terminating, separate by tearing the 12-conductor assembly into three 4-conductor assemblies.

Cable Notching

Method	Cable Ends Per Hour
2700 lb Air Bench Machine 312522-1 with Ribbon Cable Notcher Assembly 854449-2 and 854468-2 (Adapter)	1,000

For complete product information, order Catalog 82056

Products for Industrial & Commercial Applications
Dimensions are shown for reference purposes only.
Dimensions are in inches and millimeters unless otherwise specified. Values in brackets are metric equivalents.
Specifications subject to change.
Technical Support Center 1-800-522-6752 www.tycoelectronics.com

CHAMP .050 Series I Connectors

Series I Connectors for Internal Applications

- **All-plastic PC board mounting**
- **Vertical and right-angle plugs and receptacles**
- **Parallel, perpendicular, and in-line interconnections**
- **Single-spring contact design for high tolerance to mating depth variations**
- **Receptacle connectors will mate with .062 [1.57] printed circuit boards to allow service as card edge connectors**
- **20 through 200 selected positions**
- **Recognized under the Component Program of Underwriters Laboratories Inc., File No. E-28476**
- **Certified by Canadian Standards Association File No. LR 7189C**
- **Produced under a quality management system certified to ISO 9001**

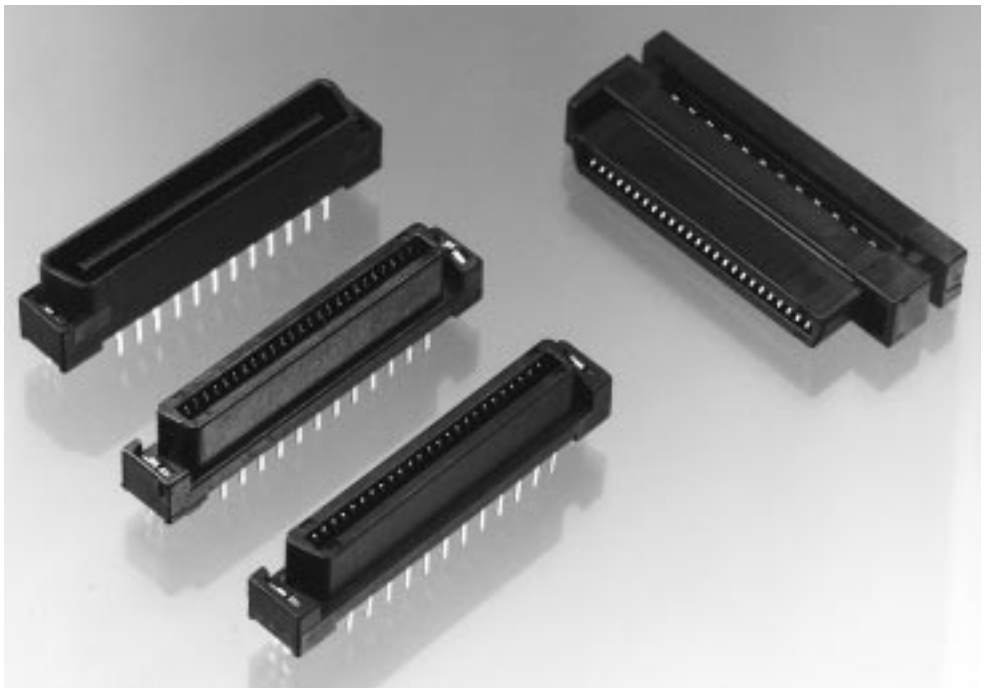

Performance Specifications:

Operating Temperature Range — –55°C to +85°C for Standard
–55°C to +105°C for High Temp.

Current Rating — 1 Ampere Max.

Voltage Rating — 250 VAC Max.

Termination Resistance — 35 Milliohms Maximum Initial

Insulation Resistance — 1,000 Megohms Minimum Initial

Mating Force — 90 Grams Per Contact Maximum

Rated Cycle Life — 500 Cycles

Technical Documents:

Product Specification
108-5290 — Standard Temp
108-1367 — High Temp

Application Specification
114-6045

Instruction Sheet
411-5499

For complete product information, order Catalog 82244

Products for Industrial & Commercial Applications
Dimensions are shown for reference purposes only.
Dimensions are in inches and millimeters unless otherwise specified. Values in brackets are metric equivalents.
Specifications subject to change.
Technical Support Center
1-800-522-6752
www.tycoelectronics.com

CHAMP .050 Series I Connectors

Right-Angle Plugs

Materials and Finish:

Housing and Tine Plate — Glass filled nylon, rated 94V-0, black for standard. LCP, rated 94V-0, black for High Temp.

Contacts — Phosphor bronze selectively plated with minimum of .000030 [0.00076] gold in mating area and tin-lead in solder tail area.

Retention Leg (Board Lock) — Brass, tin-lead plated.

Performance Specifications — Page 2228

PC Board Accommodation — .031 [0.79] to .063 [1.60] nominal thickness

Mating Receptacle Connectors — Right-Angle — Below Vertical — Page 2230

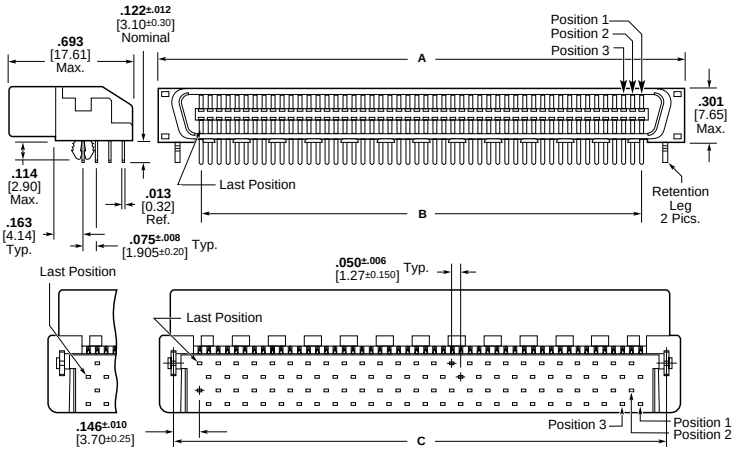

No. of Positions	Dimensions A	B	C	Part Numbers High Temp.
40	**1.391** 35.33	**.950** 24.13	**1.241** 31.52	557100-5
50	**1.641** 41.68	**1.200** 30.48	**1.491** 37.87	557100-9
68	**2.091** 53.11	**1.650** 41.91	**1.941** 49.30	1-557100-7
80	**2.391** 60.73	**1.950** 49.53	**2.241** 56.92	2-557100-1
100	**2.891** 73.43	**2.450** 62.23	**2.741** 69.62	2-557100-5
120	**3.391** 86.13	**2.950** 74.93	**3.241** 82.32	2-557100-9

Right-Angle Receptacles

Materials and Finish:

Housing and Tine Plate — Glass filled nylon, rated 94V-0, black for standard. LCP, rated 94V-0, black for High Temp.

Contacts — Phosphor bronze selectively plated with minimum of .000030 [.00076] gold in mating area and tin-lead in solder tail area.

Retention Leg (Board Lock) — Brass, tin-lead plated.

Performance Specifications — Page 2228

PC Board Accommodation — .031 [0.79] to .063 [1.60] nominal thickness

Mating Plug Connectors — Right-Angle — Above Vertical — Page 2230

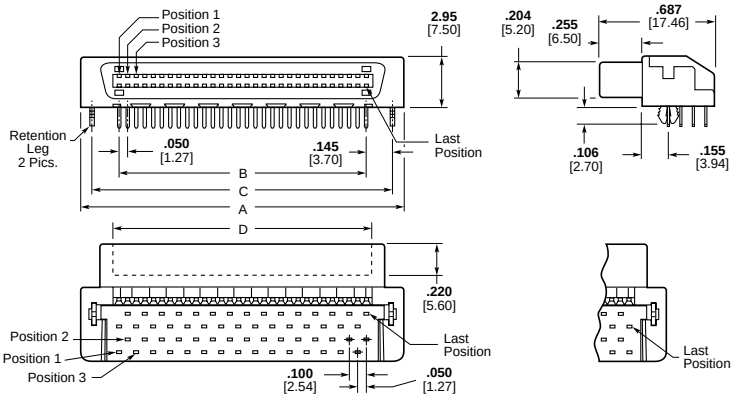

No. of Positions	Dimensions A	B	C	D	Part Numbers High Temp.	Part Numbers Standard Temp.
40	**1.391** 35.33	**.950** 24.13	**1.241** 31.53	**1.024** 26.03	557101-5	5-175474-5
50	**1.641** 41.68	**1.200** 30.48	**1.491** 37.88	**1.274** 32.38	557101-9	—
68	**2.091** 53.11	**1.650** 41.91	**1.941** 49.31	**1.724** 43.81	1-557101-7	—
80	**2.391** 60.73	**1.950** 49.53	**2.241** 56.93	**2.024** 51.43	2-557101-1	5-175474-9
100	**2.891** 73.43	**2.450** 62.23	**2.741** 69.63	**2.524** 64.13	*2-557101-5	—
120	**3.391** 86.13	**2.950** 74.93	**3.241** 82.33	**3.024** 76.83	2-557101-9	—

*Part Number without board locks is available — Contact Tyco Electronics.

For complete product information, order Catalog 82244

Products for Industrial & Commercial Applications
Dimensions are shown for reference purposes only.
Dimensions are in inches and millimeters unless otherwise specified. Values in brackets are metric equivalents.
Specifications subject to change.
Technical Support Center
1-800-522-6752
www.tycoelectronics.com

CHAMP .050 Series I Connectors

Vertical Plugs

Materials and Finish:

Housing — Glass filled nylon, rated 94V-0, black for standard. LCP, rated 94V-0, black for High Temp.

Contacts — Phosphor bronze selectively plated with minimum of .000030 [0.00076] gold in mating area and tin-lead in solder tail area.

Retention Leg (Board Lock) — Brass, tin-lead plated.

Performance Specifications — Page 2228

PC Board Accommodation — .031 [0.79] to .063 [1.60] nominal thickness

Mating Receptacles — Right Angle — Page 2229 Vertical — Below

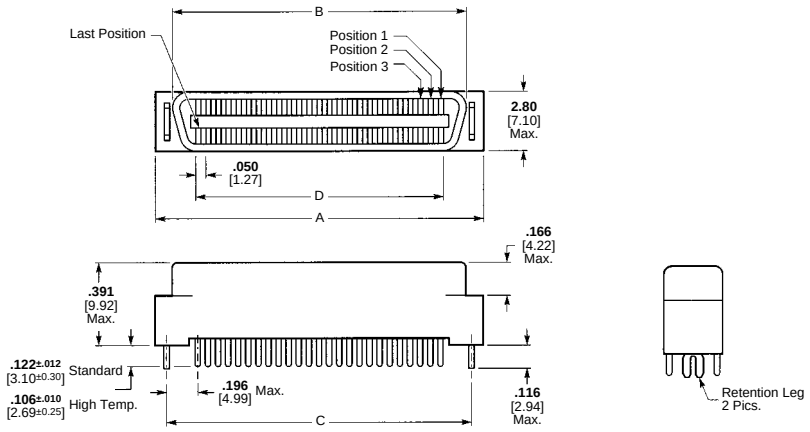

No. of Positions	Dimensions					Part Numbers	
	A	B	C	D	E[3]	Keying Post[2]	Standard Temp. w/o Post[1]
40	**1.447** 36.75	**1.278** 32.47	**1.343** 34.11	**.950** 24.13	—	557102-5	—
68	**2.147** 54.53	**1.978** 50.25	**2.043** 51.89	**1.650** 41.91	—	1-557102-7	—
80	**2.447** 62.15	**2.278** 57.87	**2.343** 59.51	**1.950** 49.53	—	*2-557102-1	5-175473-9
100	**2.947** 74.85	**2.778** 70.57	**2.843** 72.21	**2.450** 62.23	—	2-557102-5	6-175473-0
120	**3.447** 87.55	**3.278** 83.27	**3.343** 84.91	**2.950** 74.93	**1.671** 42.44	2-557102-9	—

*Part Numbers without board locks are available, contact Tyco Electronics.

Vertical Receptacles

Materials and Finish

Housing — Glass filled nylon, rated 94V-0, black for standard. PPA, rated 94V-0 for High Temp.

Contacts — Phosphor bronze selectively plated with minimum of .000030 [0.00076] gold in mating area and tin-lead in solder tail area.

Retention Leg (Board Lock) — Brass, tin-lead plated.

Performance Specifications — Page 2228

PC Board Accommodation — .031 [0.79] to .063 [1.60] nominal thickness

Mating Plug Connectors — Right-Angle — Page 2229 Vertical — Above

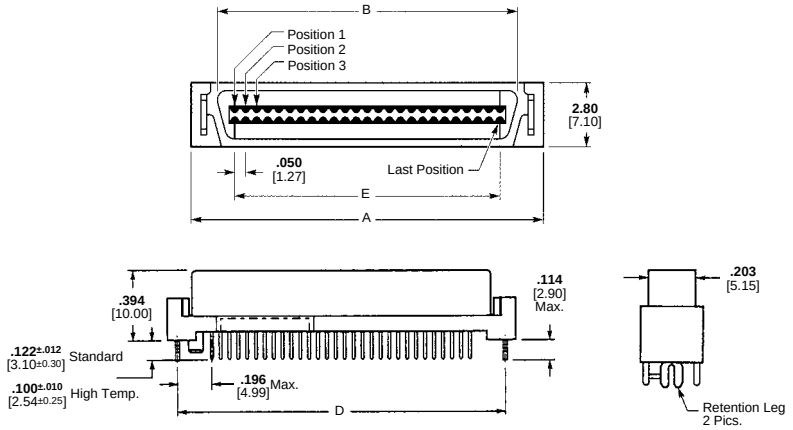

No. of Positions	Dimensions						Part Numbers	
	A	B	C	D	E	F[3]	Keying Post[2]	w/o Post[1]
40	**1.447** 36.75	**1.168** 29.67	**.985** 25.03	**1.343** 34.11	**.950** 24.13	—	557103-5	—
68	**2.147** 54.53	**1.868** 47.45	**1.724** 43.81	**2.043** 51.89	**1.650** 41.91	—	1-557103-7	1-786925-7
80	**2.447** 62.15	**2.168** 55.07	**2.024** 51.43	**2.343** 59.51	**1.950** 49.53	—	*2-557103-1	2-786925-1
100	**2.947** 74.85	**2.668** 67.77	**2.131** 54.13	**2.843** 72.21	**2.450** 62.23	—	*2-557103-5	—
120	**3.447** 87.55	**3.418** 86.82	**3.024** 76.83	**3.343** 84.91	**2.950** 74.93	**1.671** 42.44	2-557103-9	—
160	**4.447** 112.95	**4.160** 105.87	**4.024** 102.21	**4.343** 110.31	**3.950** 100.33	**2.171** 55.14	3-557103-7	—

[1] End Board Locks.
[2] End Board Locks and Keying Post.
[3] End and Center Board Locks and Keying Post.
*Part Numbers without board locks are available, contact Tyco Electronics.

For complete product information, order Catalog 82244

Products for Industrial & Commercial Applications
Dimensions are shown for reference purposes only.
Dimensions are in inches and millimeters unless otherwise specified. Values in brackets are metric equivalents.
Specifications subject to change.
Technical Support Center
1-800-522-6752
www.tycoelectronics.com

Product Facts

- **For parallel board stacking applications**
- **High density packaging on 0.8 [.031] centerline spacing**
- **Available sizes from 40 to 200 positions (in 20 position increments)**
- **Board stacking heights available from 5 [.197] to 16 [.630] (in 1 [.039] increments)**
- **Bellows type spring contacts are resistant to scooping and stubbing during mating and unmating**
- **Positioning bosses for proper on-board orientation**
- **Available packaged on"tape-and-reel" for automatic placement per EIA standards**
- **Recognized under the Component Program of Underwriter Laboratories Inc., File No. E28476**

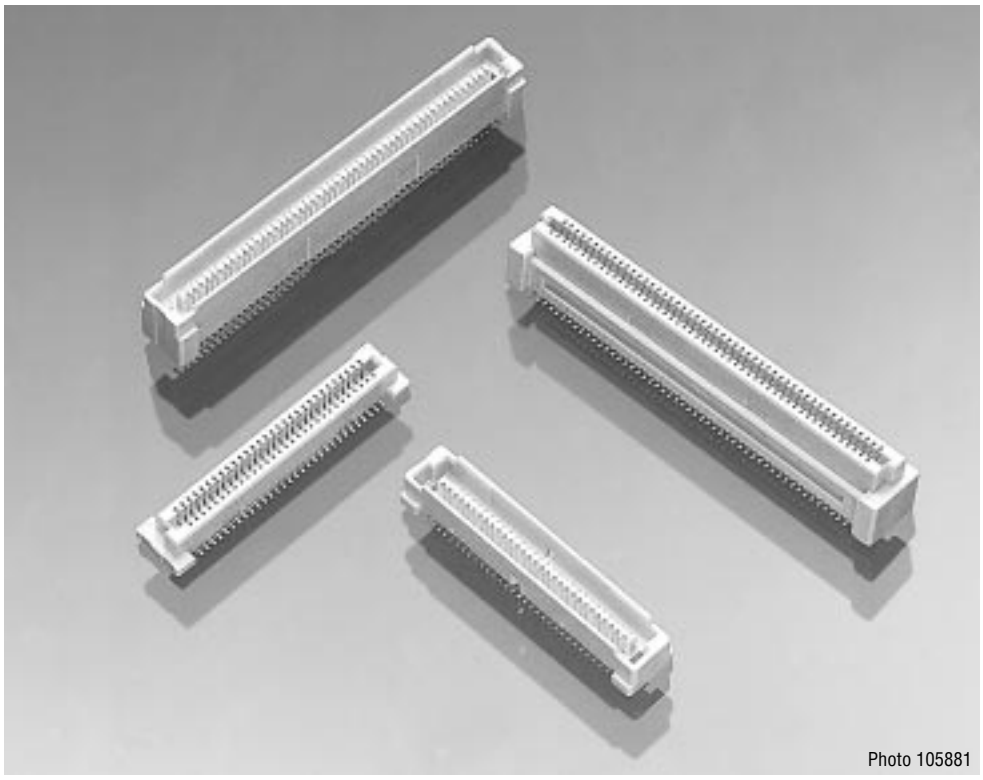

Photo 105881

AMP 0.8mm FH surface-mount connectors are designed for parallel board stacking applications using subminiature connectors to meet today's electronic industry requirements for high density packaging.

It is possible to save more than 50% of the required board space when compared to conventional 1.27 [.050] centerline connectors.

Vertical board-mount plugs and receptacles are available. By mating combinations of plug and receptacle housing heights, board-to-board stacking heights from 5 [.197] to 16 [.630] (in 1 [.039] increments) can be achieved.

The receptacles are preloaded with unique bellows-type spring contacts for reliable electrical connection with the plugs.

Surface-mount solder leads permit fast assembly operation.

Performance Characteristics:

Voltage Rating — 100 VAC

Current Rating — 0.5 ampere

Contact Resistance — 30 milliohms max. (initial)

Dielectric Withstanding Voltage — 500 VAC (1 minute)

Operating Temperature — -40°C to +85°C (Including terminal temperature rise)

Board-to-Board Stacking Heights (By Plug/Receptacle Combinations)

Part Number: 177984-☐
(Page 2233)

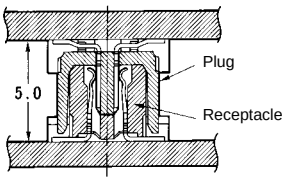

Part Number: 177983-☐
(Page 2237)
5 [.197] Stacking Height

Part Number: 179029-☐
(Page 2234)

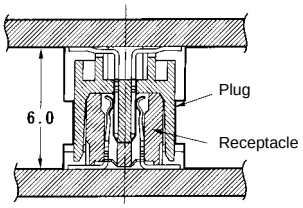

Part Number: 177983-☐
(Page 2237)
6 [.236] Stacking Height

Part Number: 179030-☐
(Page 2235)

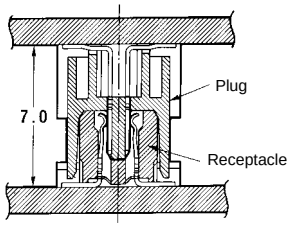

Part Number: 177983-☐
(Page 2237)
7 [.276] Stacking Height

Part Number: 179031-☐
(Page 2236)

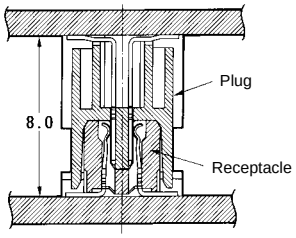

Part Number: 177983-☐
(Page 2237)
8 [.315] Stacking Height

Part Number: 177984-☐
(Page 2233)

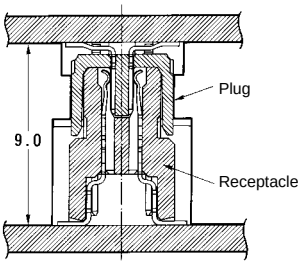

Part Number: 5-179009-☐
(Page 2238)
9 [.354] Stacking Height

Part Number: 179029-☐
(Page 2234)

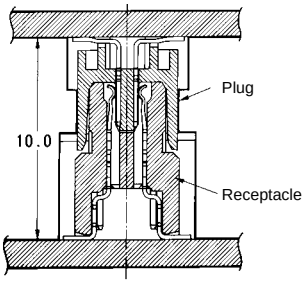

Part Number: 5-179009-☐
(Page 2238)
10 [.394] Stacking Height

Part Number: 179030-☐
(Page 2235)

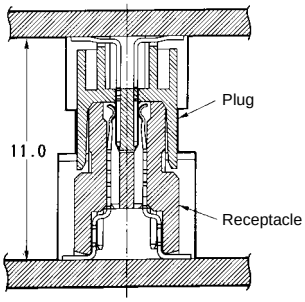

Part Number: 5-179009-☐
(Page 2238)
11 [.433] Stacking Height

Part Number: 179031-☐
(Page 2236)

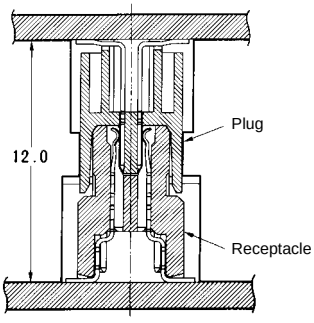

Part Number: 5-179009-☐
(Page 2238)
12 [.472] Stacking Height

Part Number: 177984-☐
(Page 2233)

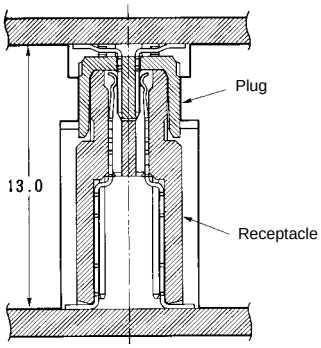

Part Number: 5-179010-☐
(Page 2239)
13 [.512] Stacking Height

Part Number: 179029-☐
(Page 2234)

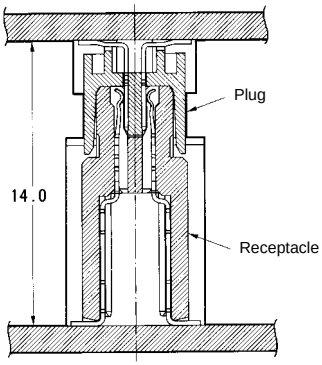

Part Number: 5-179010-☐
(Page 2239)
14 [.551] Stacking Height

Part Number: 179030-☐
(Page 2235)

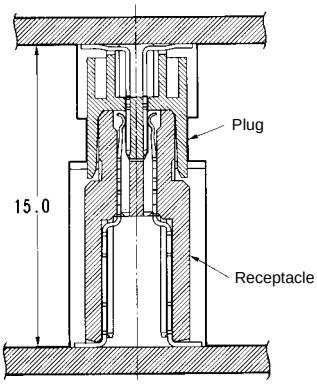

Part Number: 5-179010-☐
(Page 2239)
15 [.591] Stacking Height

Part Number: 179031-☐
(Page 2236)

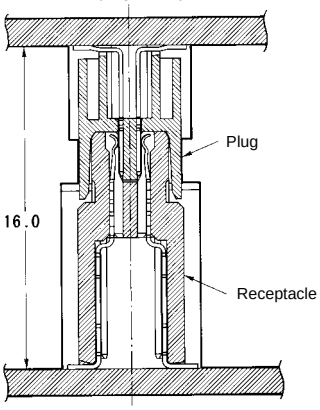

Part Number: 5-179010-☐
(Page 2239)
16 [.630] Stacking Height

Note: For specific dash nos. of sizes 40 to 200 positions (in 20-position increments), see pages 2233-2239.

For complete product information, order Catalog 889092

Products for Industrial & Commercial Applications
Dimensions are shown for reference purposes only.
Dimensions are in inches and millimeters unless otherwise specified. Values in brackets are metric equivalents.
Specifications subject to change.
Technical Support Center 1-800-522-6752 www.tycoelectronics.com

Vertical Plugs

5mm Plugs for 5 [.197], 9 [.354] and 13 [.512] Stacking Heights

Material and Finish:

Housing — High temperature thermoplastic, natural color, 94V-0 rated

Contacts — Brass; duplex plated 0.00020 [.000008] min. gold on contact area, 0.00100 [.000039] min. tin-lead on solder area, with entire contact underplated 0.00130 [.000051] min. nickel

Related Product Data:

Performance Characteristics — Page 2231

Stacking Height Combinations — Page 2232

Mating Receptacles — Page 2237-2239

Technical Documents:

Product Specification
108-5390

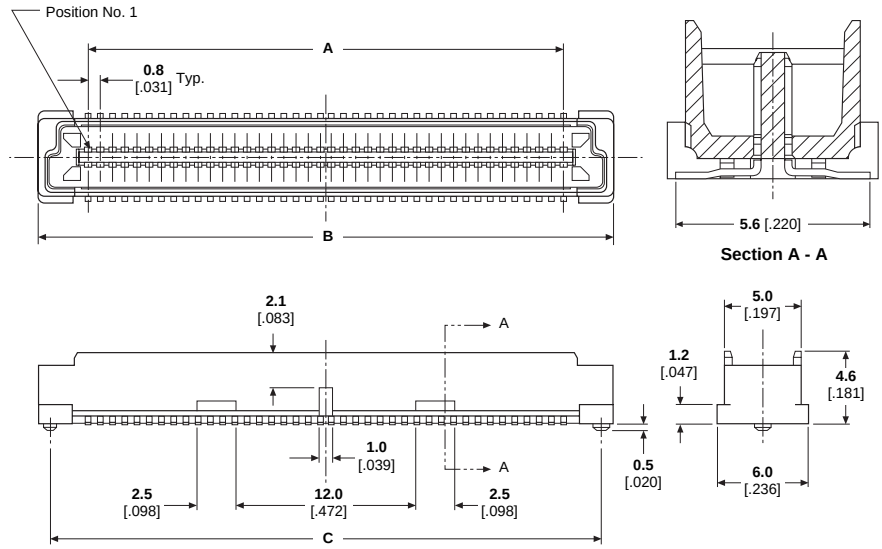

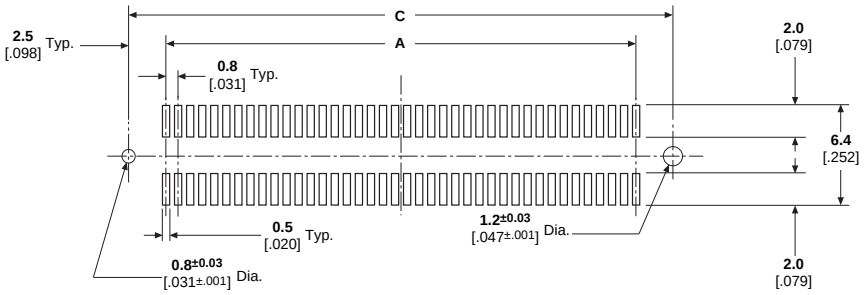

Recommended PC Board Layout

No. of Positions	Dimensions			Plug Part Numbers	
	A	B	C	Tube Packaged	Tape Packaged*
40	**15.20** .598	**21.80** .858	**20.20** .795	177984-1	177986-1
60	**23.20** .913	**29.80** 1.173	**28.20** 1.110	177984-2	177986-2
80	**31.20** 1.228	**37.80** 1.488	**36.20** 1.425	177984-3	177986-3
100	**39.20** 1.543	**45.80** 1.803	**44.20** 1.740	177984-4	177986-4
120	**47.20** 1.858	**53.80** 2.118	**52.20** 2.055	177984-5	177986-5
140	**55.20** 2.173	**61.80** 2.433	**60.20** 2.370	177984-6	177986-6
160	**63.20** 2.488	**69.80** 2.748	**68.20** 2.685	177984-8	—
200	**79.20** 3.118	**85.80** 3.378	**84.20** 3.315	1-177984-0	—

*With steel cover for automatic placement.

For complete product information, order Catalog 889092

Products for Industrial & Commercial Applications

Dimensions are shown for reference purposes only.

Dimensions are in inches and millimeters unless otherwise specified. Values in brackets are metric equivalents.

Specifications subject to change.

Technical Support Center
1-800-522-6752
www.tycoelectronics.com

Vertical Plugs

6mm Plugs for 6 [.236], 10 [.394] and 14 [.551] Stacking Heights

Material and Finish:

Housing — High temperature thermoplastic, natural color, 94V-0 rated

Contacts — Brass; duplex plated 0.00020 [.000008] min. gold on contact area, 0.00100 [.000039] min. tin-lead on solder area, with entire contact underplated 0.00130 [.000051] min. nickel

Related Product Data:

Performance Characteristics — Page 2231

Stacking Height Combinations — Page 2232

Mating Receptacles — Page 2237-2239

Technical Documents:

Product Specification
108-5390

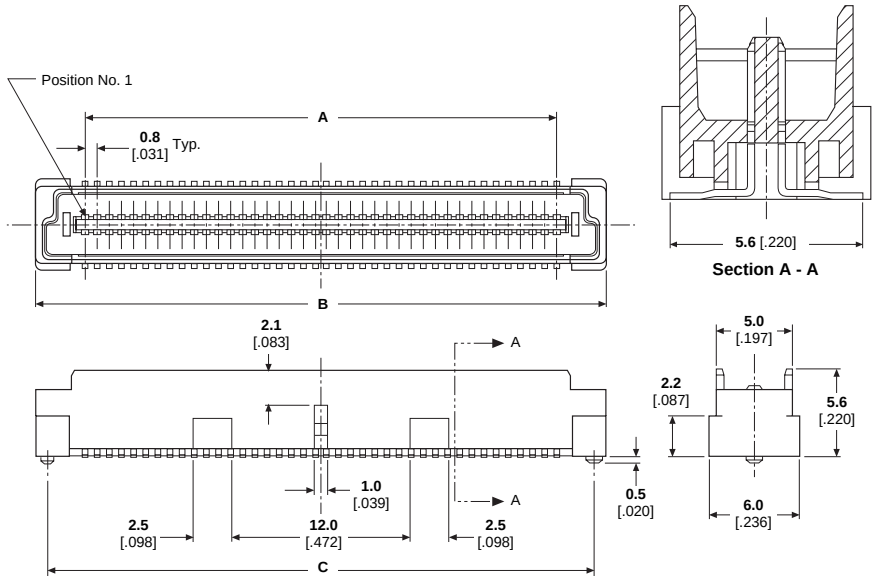

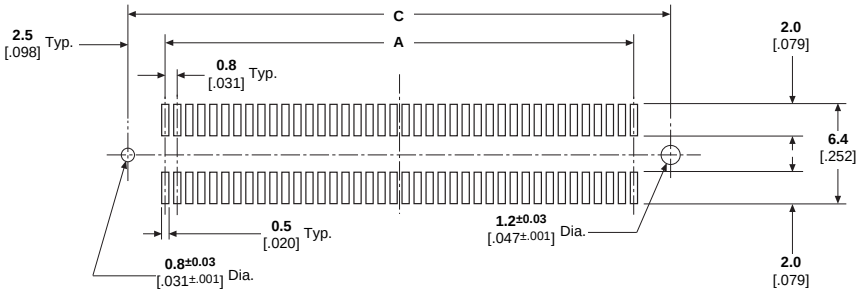

Recommended PC Board Layout

No. of Positions	Dimensions			Plug Part Numbers	
	A	B	C	Tube Packaged	Tape Packaged*
40	**15.20** .598	**21.80** .858	**20.20** .795	179029-1	1-177986-1
60	**23.20** .913	**29.80** 1.173	**28.20** 1.110	179029-2	1-177986-2
80	**31.20** 1.228	**37.80** 1.488	**36.20** 1.425	179029-3	1-177986-3
100	**39.20** 1.543	**45.80** 1.803	**44.20** 1.740	179029-4	1-177986-4
120	**47.20** 1.858	**53.80** 2.118	**52.20** 2.055	179029-5	1-177986-5
140	**55.20** 2.173	**61.80** 2.433	**60.20** 2.370	179029-6	—
160	**63.20** 2.488	**69.80** 2.748	**68.20** 2.685	179029-8	—
180	**71.20** 2.803	**77.80** 3.063	**76.20** 3.000	179029-9	—
200	**79.20** 3.118	**85.80** 3.378	**84.20** 3.315	1-179029-0	—

*With steel cover for automatic placement.

For complete product information, order Catalog 889092

Products for Industrial & Commercial Applications

Dimensions are shown for reference purposes only.

Dimensions are in inches and millimeters unless otherwise specified. Values in brackets are metric equivalents.

Specifications subject to change.

Technical Support Center
1-800-522-6752
www.tycoelectronics.com

Vertical Plugs

7mm Plugs for 7 [.276], 11 [.433] and 15 [.591] Stacking Heights

Material and Finish:

Housing — High temperature thermoplastic, natural color, 94V-0 rated

Contacts — Brass; duplex plated 0.00020 [.000008] min. gold on contact area, 0.00100 [.000039] min. tin-lead on solder area, with entire contact underplated 0.00130 [.000051] min. nickel

Related Product Data:

Performance Characteristics — Page 2231

Stacking Height Combinations — Page 2232

Mating Receptacles — Page 2237-2239

Technical Documents:

Product Specification
108-5390

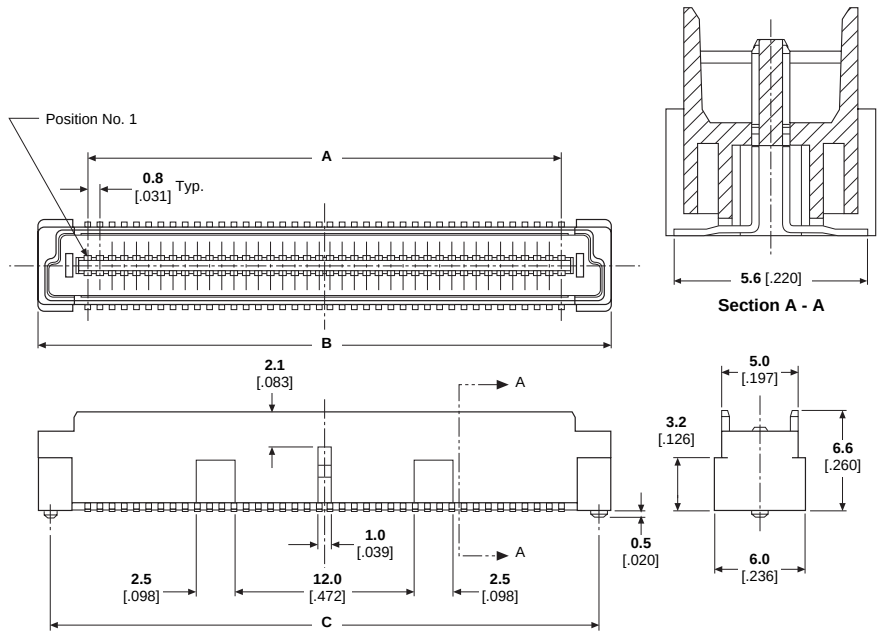

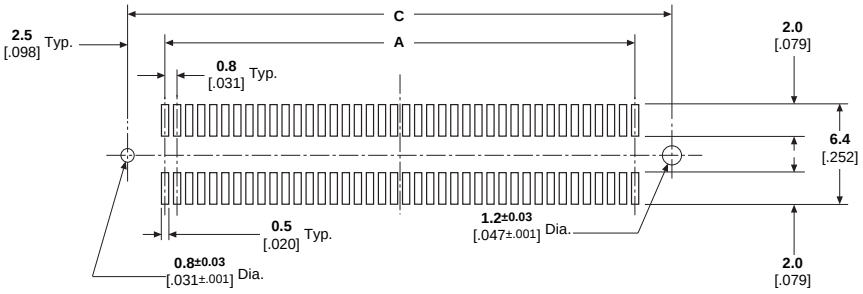

Recommended PC Board Layout

No. of Positions	Dimensions			Plug Part Numbers	
	A	B	C	Tube Packaged	Tape Packaged *
40	**15.20** .598	**21.80** .858	**20.20** .795	179030-1	2-177986-1
60	**23.20** .913	**29.80** 1.173	**28.20** 1.110	179030-2	2-177986-2
80	**31.20** 1.228	**37.80** 1.488	**36.20** 1.425	179030-3	2-177986-3
100	**39.20** 1.543	**45.80** 1.803	**44.20** 1.740	179030-4	2-177986-4
120	**47.20** 1.858	**53.80** 2.118	**52.20** 2.055	179030-5	2-177986-5
140	**55.20** 2.173	**61.80** 2.433	**60.20** 2.370	179030-6	—
160	**63.20** 2.488	**69.80** 2.748	**68.20** 2.685	179030-8	—
200	**79.20** 3.118	**85.80** 3.378	**84.20** 3.315	1-179030-0	—

*With steel cover for automatic placement.

For complete product information, order Catalog 889092

Products for Industrial & Commercial Applications

Dimensions are shown for reference purposes only.

Dimensions are in inches and millimeters unless otherwise specified. Values in brackets are metric equivalents.

Specifications subject to change.

Technical Support Center
1-800-522-6752
www.tycoelectronics.com

Vertical Plugs

8mm Plugs for 8 [.315], 12 [.472] and 16 [.630] Stacking Heights

Material and Finish:

Housing — High temperature thermoplastic, natural color, 94V-0 rated

Contacts — Brass; duplex plated 0.00020 [.000008] min. gold on contact area, 0.00100 [.000039] min. tin-lead on solder area, with entire contact underplated 0.00130 [.000051] min. nickel

Related Product Data:

Performance Characteristics — Page 2231

Stacking Height Combinations — Page 2232

Mating Receptacles — Page 2237-2239

Technical Documents:

Product Specification
108-5390

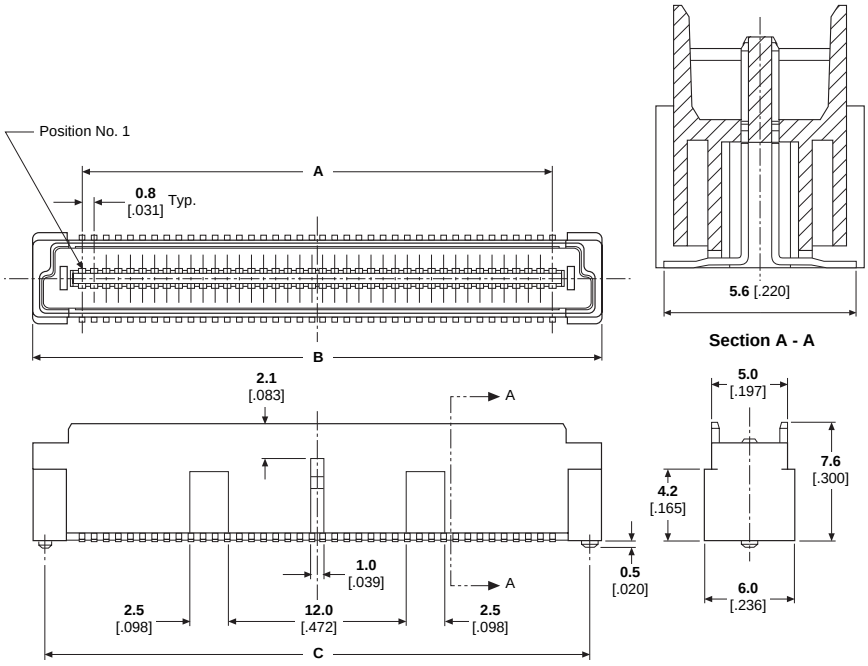

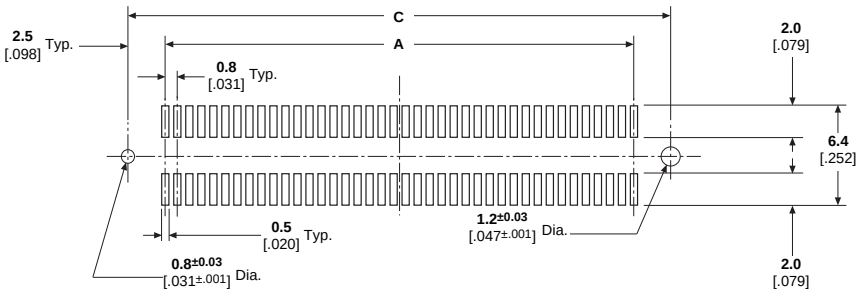

Recommended PC Board Layout

No. of Positions	Dimensions			Plug Part Numbers	
	A	B	C	Tube Packaged	Tape Packaged*
40	**15.20** .598	**21.80** .858	**20.20** .795	179031-1	3-177986-1
60	**23.20** .913	**29.80** 1.173	**28.20** 1.110	179031-2	3-177986-2
80	**31.20** 1.228	**37.80** 1.488	**36.20** 1.425	179031-3	3-177986-3
100	**39.20** 1.543	**45.80** 1.803	**44.20** 1.740	179031-4	3-177986-4
120	**47.20** 1.858	**53.80** 2.118	**52.20** 2.055	179031-5	3-177986-5
140	**55.20** 2.173	**61.80** 2.433	**60.20** 2.370	179031-6	—
160	**63.20** 2.488	**69.80** 2.748	**68.20** 2.685	179031-8	—
180	**71.20** 2.803	**77.80** 3.063	**76.20** 3.000	179031-9	—
200	**79.20** 3.118	**85.80** 3.378	**84.20** 3.315	1-179031-0	—

*With steel cover for automatic placement.

For complete product information, order Catalog 889092

Products for Industrial & Commercial Applications

Dimensions are shown for reference purposes only.

Dimensions are in inches and millimeters unless otherwise specified. Values in brackets are metric equivalents.

Specifications subject to change.

Technical Support Center
1-800-522-6752
www.tycoelectronics.com

Vertical Receptacles

5mm Receptacles for 5 [.197], 6 [.236], 7 [.276] and 8 [.315] Stacking Heights

Material and Finish:

Housing — High temperature thermoplastic, natural color, 94V-0 rated

Contacts — Beryllium copper; duplex plated 0.00020 [.000008] min. gold on contact area, 0.00100 [.000039] min. tin-lead on solder area, with entire contact underplated 0.00130 [.000051] min. nickel

Related Product Data:

Performance Characteristics — Page 2231

Stacking Height Combinations — Page 2232

Mating Plugs — Page 2233-2236

Technical Documents:

Product Specification
108-5390

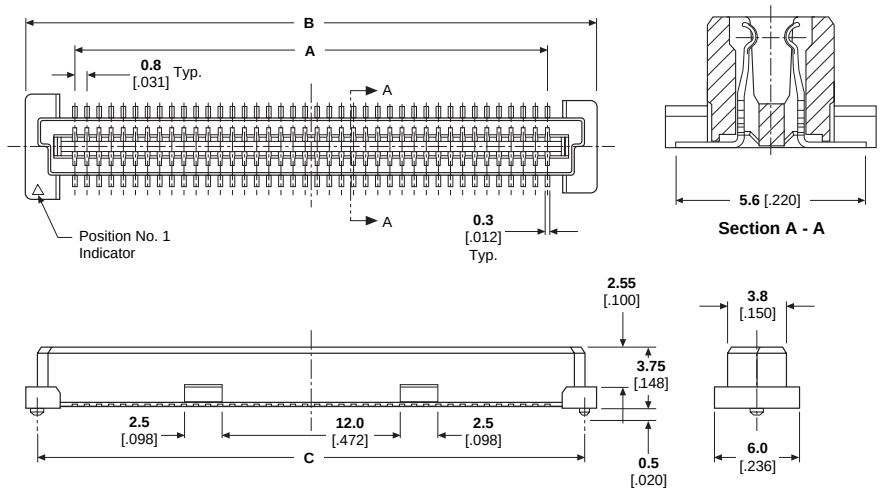

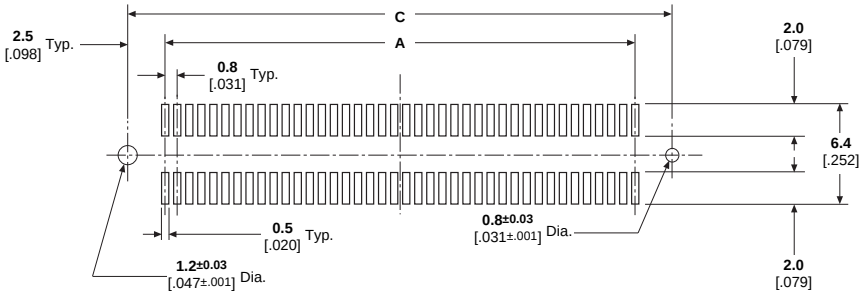

Recommended PC Board Layout

No. of Positions	Dimensions			Receptacle Part Numbers	
	A	B	C	Tube Packaged	Tape Packaged*
40	**15.20** .598	**21.80** .858	**20.20** .795	177983-1	177985-1
60	**23.20** .913	**29.80** 1.173	**28.20** 1.110	177983-2	177985-2
80	**31.20** 1.228	**37.80** 1.488	**36.20** 1.425	177983-3	177985-3
100	**39.20** 1.543	**45.80** 1.803	**44.20** 1.740	177983-4	177985-4
120	**47.20** 1.858	**53.80** 2.118	**52.20** 2.055	177983-5	177985-5
140	**55.20** 2.173	**61.80** 2.433	**60.20** 2.370	177983-6	—
160	**63.20** 2.488	**69.80** 2.748	**68.20** 2.685	177983-8	—
200	**79.20** 3.118	**85.80** 3.378	**84.20** 3.315	1-177983-0	—

*With steel cover for automatic placement.

For complete product information, order Catalog 889092

Products for Industrial & Commercial Applications

Dimensions are shown for reference purposes only.

Dimensions are in inches and millimeters unless otherwise specified. Values in brackets are metric equivalents.

Specifications subject to change.

Technical Support Center
1-800-522-6752
www.tycoelectronics.com

Vertical Receptacles

9mm Receptacles for 9 [.354], 10 [.394], 11 [.433] and 12 [.472] Stacking Heights

Material and Finish:

Housing — High temperature thermoplastic, natural color, 94V-0 rated

Contacts — Beryllium copper; duplex plated 0.00020 [.000008] min. gold on contact area, 0.00100 [.000039] min. tin-lead on solder area, with entire contact underplated 0.00130 [.000051] min. nickel

Related Product Data:

Performance Characteristics — Page 2231

Stacking Height Combinations — Page 2232

Mating Plugs — Page 2233-2236

Technical Documents:

Product Specification
108-5390

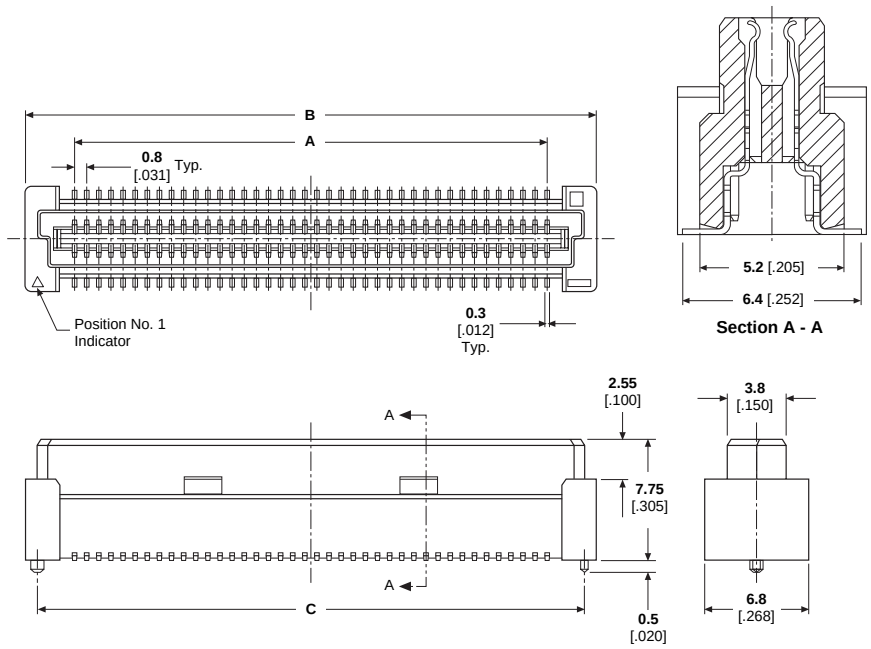

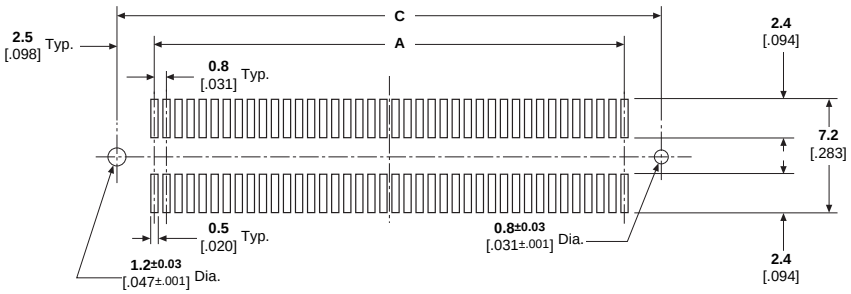

Recommended PC Board Layout

No. of Positions	Dimensions			Receptacle Part Numbers	
	A	B	C	Tube Packaged	Tape Packaged*
40	**15.20** .598	**21.80** .858	**20.20** .795	5-179009-1	5-179180-1
60	**23.20** .913	**29.80** 1.173	**28.20** 1.110	5-179009-2	5-179180-2
80	**31.20** 1.228	**37.80** 1.488	**36.20** 1.425	5-179009-3	5-179180-3
100	**39.20** 1.543	**45.80** 1.803	**44.20** 1.740	5-179009-4	5-179180-4
120	**47.20** 1.858	**53.80** 2.118	**52.20** 2.055	5-179009-5	—
140	**55.20** 2.173	**61.80** 2.433	**60.20** 2.370	5-179009-6	—
160	**63.20** 2.488	**69.80** 2.748	**68.20** 2.685	5-179009-8	—
180	**71.20** 2.803	**77.80** 3.063	**76.20** 3.000	5-179009-9	—
200	**79.20** 3.118	**85.80** 3.378	**84.20** 3.315	6-179009-0	—

*With steel cover for automatic placement.

For complete product information, order Catalog 889092

Products for Industrial & Commercial Applications

Dimensions are shown for reference purposes only.

Dimensions are in inches and millimeters unless otherwise specified. Values in brackets are metric equivalents.

Specifications subject to change.

Technical Support Center
1-800-522-6752
www.tycoelectronics.com

Vertical Receptacles

13mm Receptacles for 13 [.512], 14 [.551], 15 [.591] and 16 [.630] Stacking Heights

Material and Finish:

Housing — High temperature thermoplastic, natural color, 94V-0 rated

Contacts — Beryllium copper; duplex plated 0.00020 [.000008] min. gold on contact area, 0.00100 [.000039] min. tin-lead on solder area, with entire contact underplated 0.00130 [.000051] min. nickel

Related Product Data:

Performance Characteristics — Page 2231

Stacking Height Combinations — Page 2232

Mating Plugs — Page 2233-2236

Technical Documents:

Product Specification
108-5390

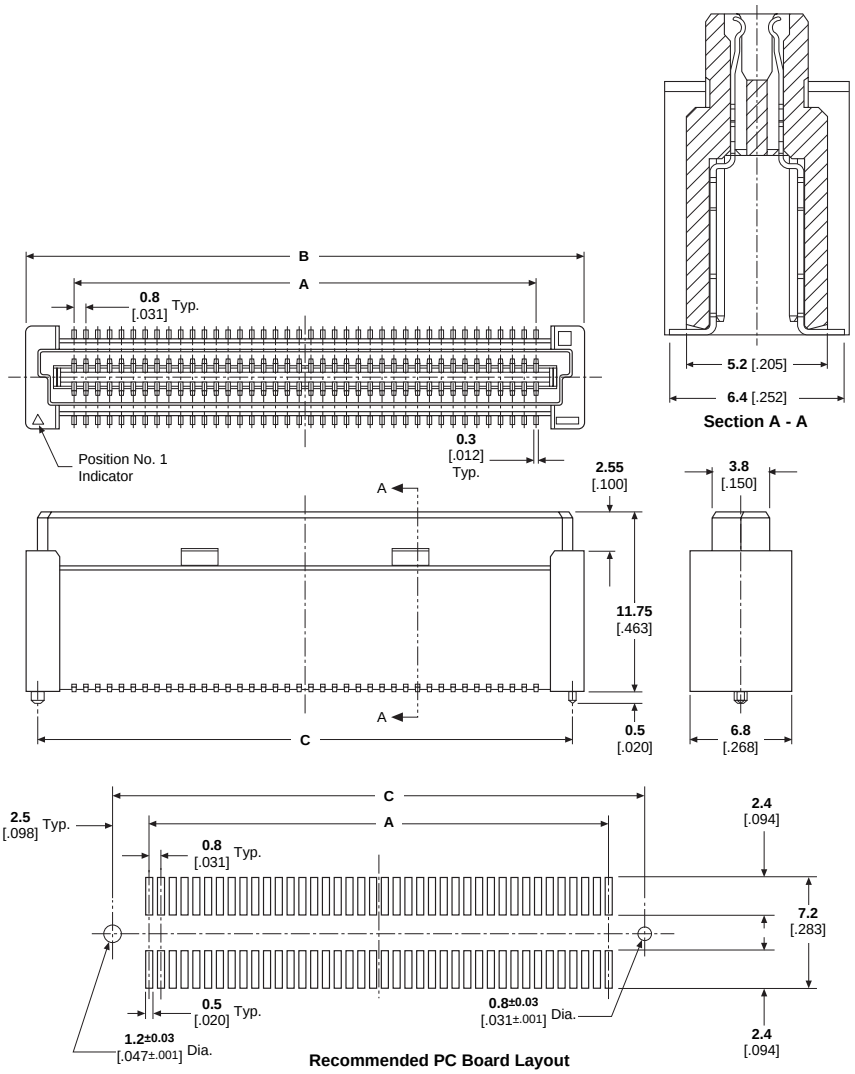

No. of Positions	Dimensions			Receptacle Part Numbers	
	A	B	C	Tube Packaged	Tape Packaged*
40	**15.20** .598	**21.80** .858	**20.20** .795	5-179010-1	84616-1
60	**23.20** .913	**29.80** 1.173	**28.20** 1.110	5-179010-2	84616-2
80	**31.20** 1.228	**37.80** 1.488	**36.20** 1.425	5-179010-3	84616-3
100	**39.20** 1.543	**45.80** 1.803	**44.20** 1.740	5-179010-4	84616-4
120	**47.20** 1.858	**53.80** 2.118	**52.20** 2.055	5-179010-5	84616-5
140	**55.20** 2.173	**61.80** 2.433	**60.20** 2.370	5-179010-6	—
160	**63.20** 2.488	**69.80** 2.748	**68.20** 2.685	5-179010-8	—
180	**71.20** 2.803	**77.80** 3.063	**76.20** 3.000	5-179010-9	—
200	**79.20** 3.118	**85.80** 3.378	**84.20** 3.315	6-179010-0	—

*With steel cover for automatic placement.

For complete product information, order Catalog 889092

Products for Industrial & Commercial Applications

Dimensions are shown for reference purposes only.

Dimensions are in inches and millimeters unless otherwise specified. Values in brackets are metric equivalents.

Specifications subject to change.

Technical Support Center
1-800-522-6752
www.tycoelectronics.com

Product Facts

- A connector system to assemble multiple connectors to both ends of wire simultaneously by the combined use of AMP high-speed automatic insulation displacement crimping machine and mass-termination connectors.
- Provides substantial labor-savings as well as improved quality and stability in harness assembly.
- The assembling machine can be adapted to all harness configurations without the need to change machine parts.
- Applicable connectors include MT connectors as well as MT AMP-IN header assemblies that can be directly inserted into printed circuit boards.
- A crimping receptacle connector is also available.
- Board-mount post headers are offered in two types, SMT-type and DIP-types, each usable for vertical mounting and horizontal mounting.
- In addition, a relay post header is available that mates with receptacle connectors both at front and at rear when mounted on panel.
- Both MT receptacle connectors and crimp-type receptacle connectors can share the same post headers when mated.
- MT AMP-IN header assemblies are secured onto boards with posts inserted directly into board holes and soldered.
- Both DIP-type post headers and MT AMP-IN headers are provided with kinks for self-retention on boards.
- Mini-Drawer connectors that mate with each other with CT receptacle connectors inserted on the wire side are also available.

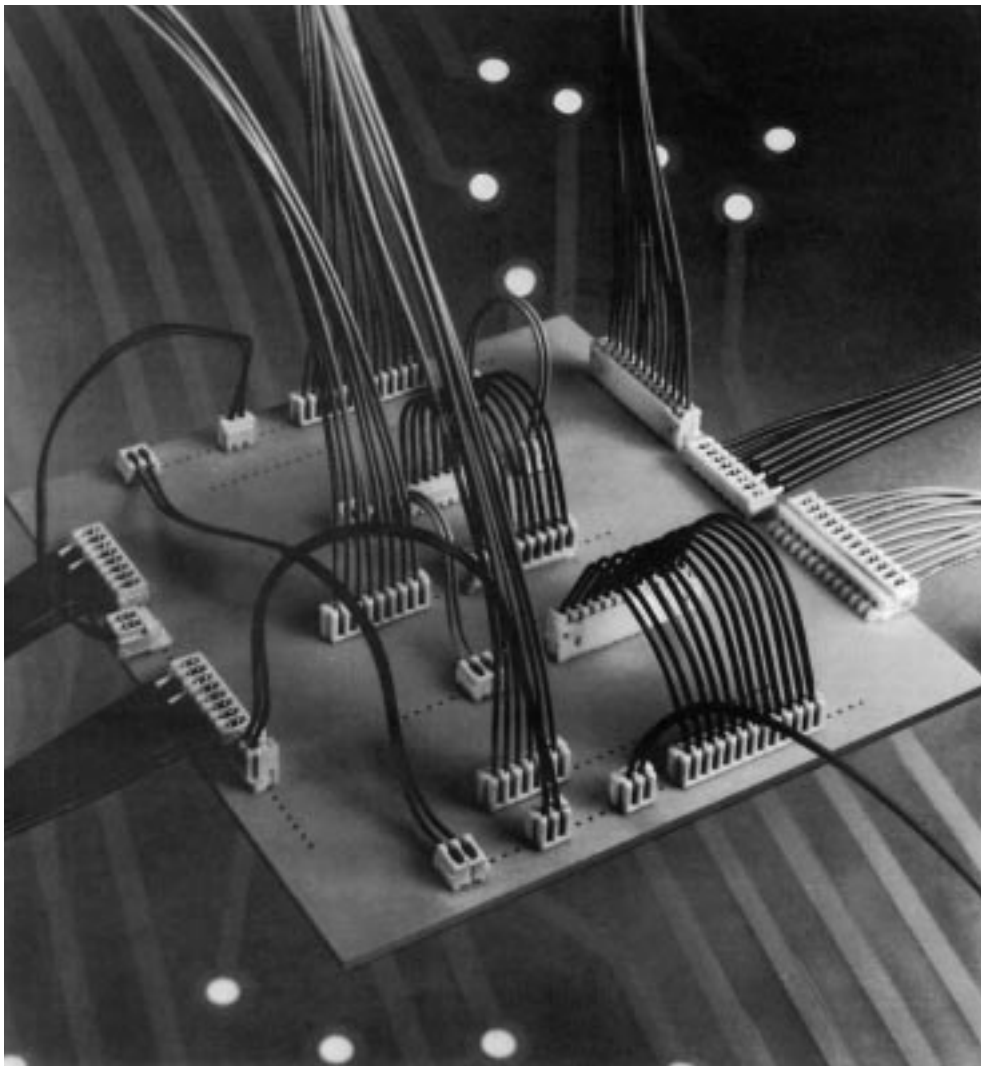

- Recognized under the Component Program of Underwriters Laboratories Inc., File No. E 28476
- Certified by Canadian Standards Association, File No. LR 7189-133

For complete product information, order Catalog 1242172

Products for Industrial & Commercial Applications

Dimensions are shown for reference purposes only.

Dimensions are in inches and millimeters unless otherwise specified. Values in brackets are metric equivalents.

Specifications subject to change.

Technical Support Center
1-800-522-6752
www.tycoelectronics.com

MT Connectors (2mm Pitch)

Insulation Displacement Receptacle Assemblies (Wire Application Side)

Material and Finish:

Housing — UL94V-0 rated, glass-filled P.B.T.,
see note below for color

Contact — Pre-tinned phosphor bronze

Wire Size — AWG #28-26 (0.08~0.15mm²)
AWG #24 (0.20~0.22mm²)

Insulation Dia. —
AWG #28-26 (0.85~1.05mm)
AWG #24 (0.9~1.05mm)

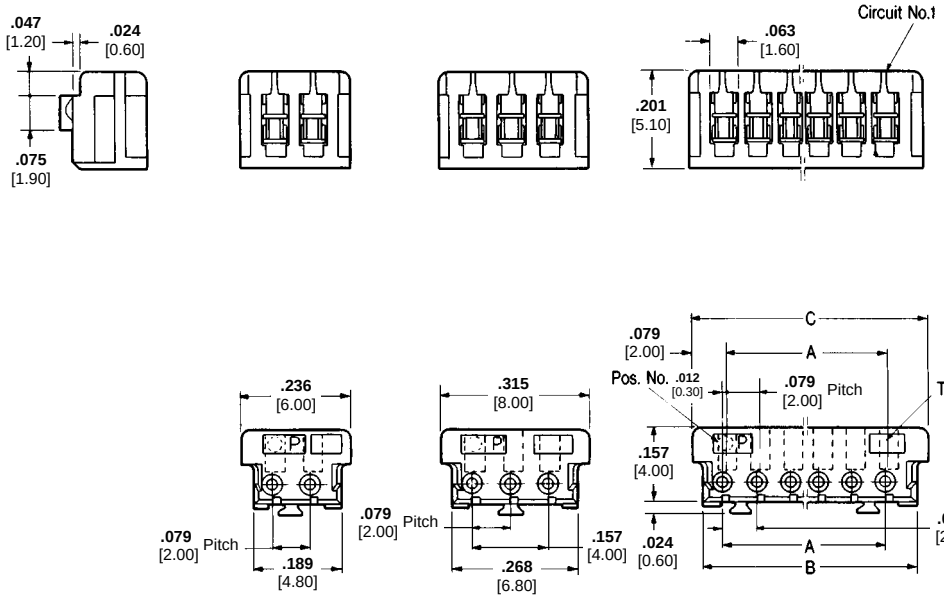

2 Position **3 Position** **4-15 Position**

No. of Positions	Dimensions			Part Numbers of Receptacle Assembly*	
	A	B	C	AWG #28-26*	AWG #24**
2	**.079** 2.00	**.189** 4.80	**.236** 6.00	173977-2	2-179694-2
3	**.157** 4.00	**.268** 6.80	**.315** 8.00	173977-3	2-179694-3
4	**.236** 6.00	**.346** 8.80	**.394** 10.00	173977-4	2-179694-4
5	**.315** 8.00	**.425** 10.80	**.472** 12.00	173977-5	2-179694-5
6	**.394** 10.00	**.504** 12.80	**.551** 14.00	173977-6	2-179694-6
7	**.472** 12.00	**.583** 14.80	**.630** 16.00	173977-7	2-179694-7
8	**.551** 14.00	**.661** 16.80	**.709** 18.00	173977-8	2-179694-8
9	**.630** 16.00	**.740** 18.80	**.787** 20.00	173977-9	2-179694-9
10	**.709** 18.00	**.819** 20.80	**.866** 22.00	1-173977-0	3-179694-0
11	**.787** 20.00	**.898** 22.80	**.945** 24.00	1-173977-1	3-179694-1
12	**.866** 22.00	**.976** 24.80	**1.024** 26.00	1-173977-2	3-179694-2
13	**.945** 24.00	**1.055** 26.80	**1.102** 28.00	1-173977-3	3-179694-3
14	**1.024** 26.00	**1.134** 28.80	**1.181** 30.00	1-173977-4	3-179694-4
15	**1.102** 28.00	**1.213** 30.80	**1.260** 32.00	1-173977-5	3-179694-5

*The color of housing is natural. Other colors available include blue, yellow and black.
**The color of the housing is gray only.

Post Header Assemblies (For MT Connectors)

Standard Type Post Header Assemblies (PC Board Application Side)

Horizontal Mount Type

Material and Finish:

Housing — UL94V-0 rated, 6/6 nylon, see note below for color

Post Contact — Tin-lead plated brass

(Acceptable board thickness: .031~.063 [0.8~1.6mm])

Horizontal Type

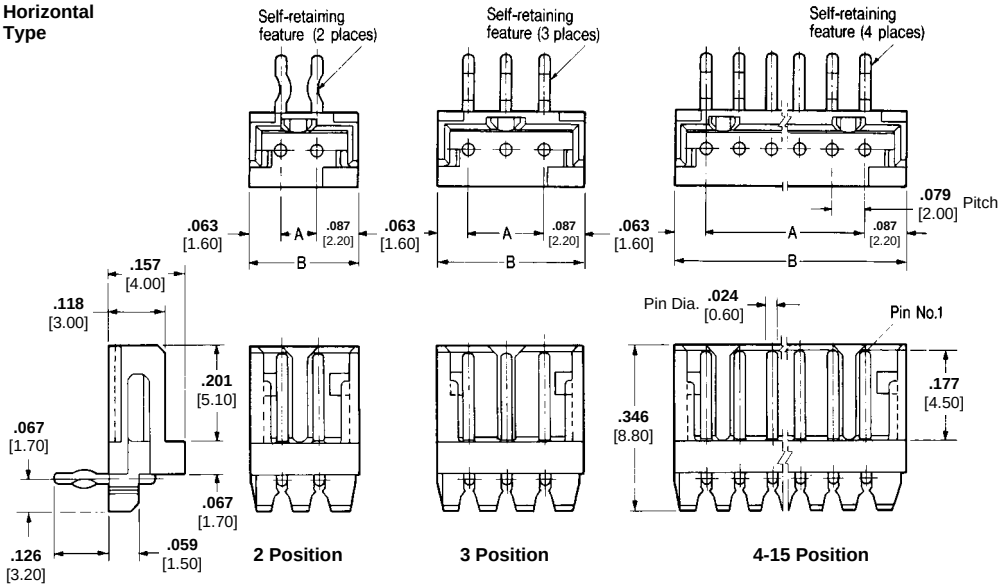

Vertical Mount Type

Material and Finish:

Housing — UL94V-0 rated, 6/6 nylon, see note below for color

Post Contact — Tin-lead plated brass

(Acceptable board thickness: .031~.063 [0.8~1.6mm])

Vertical Type

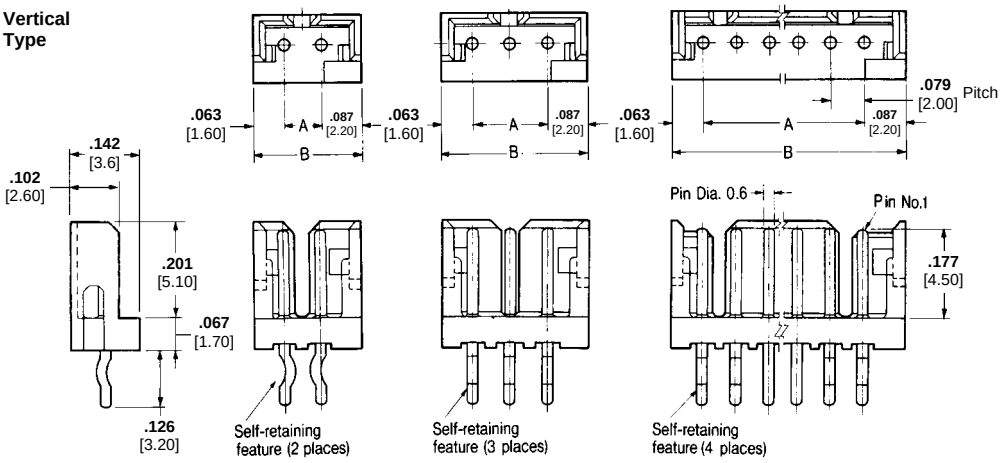

No. of Positions	Dimensions A	Dimensions B	Part Numbers of Post Header Assembly* Horizontal Mount	Part Numbers of Post Header Assembly* Vertical Mount
2	**.079** 2.00	**.228** 5.80	173979-2	173981-2
3	**.157** 4.00	**.307** 7.80	173979-3	173981-3
4	**.236** 6.00	**.386** 9.80	173979-4	173981-4
5	**.315** 8.00	**.465** 11.80	173979-5	173981-5
6	**.394** 10.00	**.543** 13.80	173979-6	173981-6
7	**.472** 12.00	**.622** 15.80	173979-7	173981-7
8	**.551** 14.00	**.701** 17.80	173979-8	173981-8
9	**.630** 16.00	**.780** 19.80	173979-9	173981-9
10	**.709** 18.00	**.858** 21.80	1-173979-0	1-173981-0
11	**.787** 20.00	**.937** 23.80	1-173979-1	1-173981-1
12	**.866** 22.00	**1.016** 25.80	1-173979-2	1-173981-2
13	**.945** 24.00	**1.094** 27.80	1-173979-3	1-173981-3
14	**1.024** 26.00	**1.173** 29.80	1-173979-4	1-173981-4
15	**1.102** 28.00	**1.252** 31.80	1-173979-5	1-173981-5

*The color of housing is natural. Other colors available include blue, yellow, black, and red. For details consult Tyco Electronics.

For complete product information, order Catalog 1242172

Products for Industrial & Commercial Applications

Dimensions are shown for reference purposes only.

Dimensions are in inches and millimeters unless otherwise specified. Values in brackets are metric equivalents.

Specifications subject to change.

Technical Support Center
1-800-522-6752
www.tycoelectronics.com

Post Header Assemblies (For MT Connectors)

DIP Box Type
Post Header Assembly
(PC Board Application Side)

Vertical Mount Type

Material and Finish:

Housing — UL94V-0 rated, 6/6 nylon, see note below for color

Post Contact — Tin-lead plated brass

(Acceptable board thickness: .031~.063 [0.8 ~ 1.6mm])

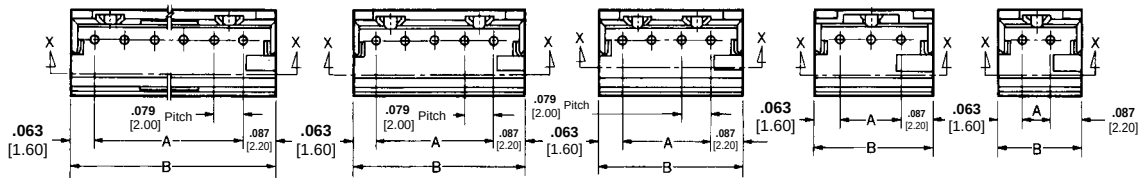

With Self-Retaining Feature (Kink)

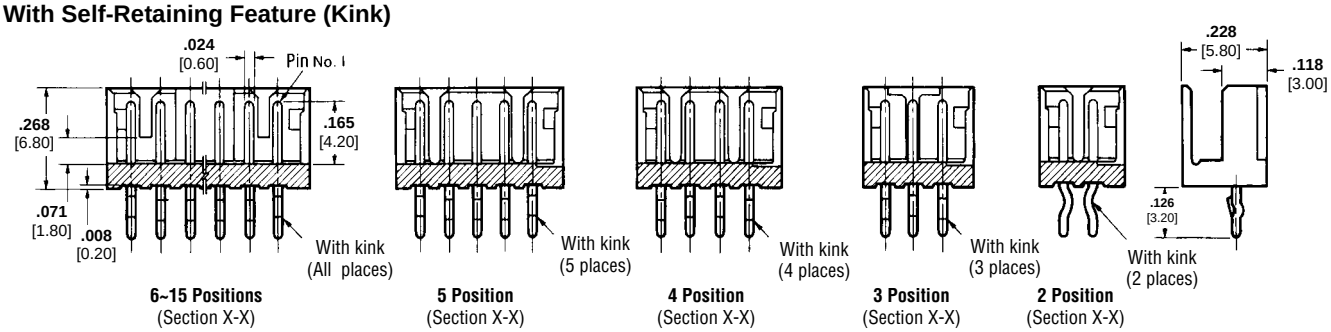

No. of Positions	Dimensions A	Dimensions B	Part Numbers of Post Header Assembly* With Kink Loose Piece
2	**.079** 2.00	**.228** 5.80	175487-2
3	**.157** 4.00	**.307** 7.80	175487-3
4	**.236** 6.00	**.386** 9.80	175487-4
5	**.315** 8.00	**.465** 11.80	175487-5
6	**.394** 10.00	**.543** 13.80	175487-6
7	**.472** 12.00	**.622** 15.80	175487-7
8	**.551** 14.00	**.701** 17.80	175487-8
9	**.630** 16.00	**.780** 19.80	175487-9
10	**.709** 18.00	**.858** 21.80	1-175487-0
11	**.787** 20.00	**.937** 23.80	1-175487-1
12	**.866** 22.00	**1.016** 25.80	1-175487-2
13	**.945** 24.00	**1.094** 27.80	1-175487-3
14	**1.024** 26.00	**1.173** 29.80	1-175487-4
15	**1.102** 28.00	**1.252** 31.80	1-175487-5

*The color of housing is natural. Other colors available include blue, yellow and black.

For complete product information, order Catalog 1242172

Products for Industrial & Commercial Applications

Dimensions are shown for reference purposes only.

Dimensions are in inches and millimeters unless otherwise specified. Values in brackets are metric equivalents.

Specifications subject to change.

Technical Support Center
1-800-522-6752
www.tycoelectronics.com

MT AMP-IN Header (2mm Pitch)

Horizontal Mount Type

Material and Finish:

Housing — UL94V-0 rated, glass-filled P.B.T., cream yellow
Contact — Pre-tinned phosphor bronze
Wire Size — AWG #28-26 (0.08~0.15mm²)
Insulation Dia. — .033~.041 [0.83~1.05mm]

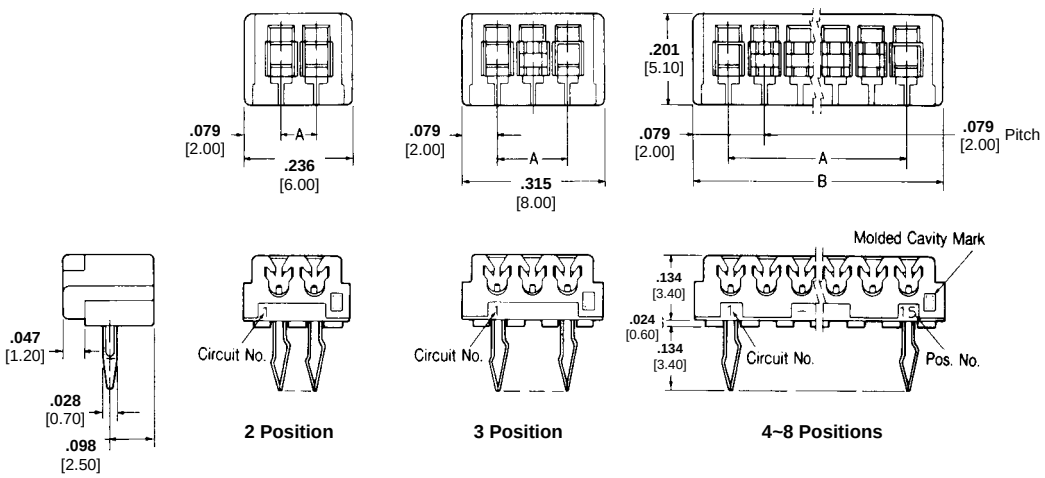

Vertical Mount Type

Material and Finish:

Housing — UL94V-0 rated, glass-filled P.B.T., light blue
Contact — Pre-tinned phosphor bronze
Wire Size — AWG #28-26 (0.08~0.15mm²)
Insulation Dia. — .033~.041 [0.83~1.05mm]
(Acceptable board thickness: .031~.063 [0.8~1.6mm])

No. of Positions	Dimensions A	Dimensions B	Part Numbers of AMP-IN Header Horizontal Mount
2	**.079** 2.00	**.236** 6.00	2-173983-2
4	**.236** 6.00	**.394** 10.00	2-173983-4
5	**.315** 8.00	**.472** 12.00	2-173983-5
6	**.394** 10.00	**.551** 14.00	2-173983-6
7	**.472** 12.00	**.630** 16.00	2-173983-7
8	**.551** 14.00	**.709** 18.00	2-173983-8

For complete product information, order Catalog 1242172

Products for Industrial & Commercial Applications
Dimensions are shown for reference purposes only.
Dimensions are in inches and millimeters unless otherwise specified. Values in brackets are metric equivalents.
Specifications subject to change.
Technical Support Center
1-800-522-6752
www.tycoelectronics.com

Application Tooling

For Insulation Displacement

Pistol Grip Hand Tool

Crimp Kit **Part Number** 911790-1



Manual Pistol Grip Tool:
Handle Assembly Part Number
58074-1
with Modular Head Part Number
58372-1



Bench Mount Power Assembly
Part Number 58338-1 **with Modular Head Assembly Part Number**
58372-1

Hand Press

Crimp Part Number 909372-1



Mini Press

Part Number 759980-3



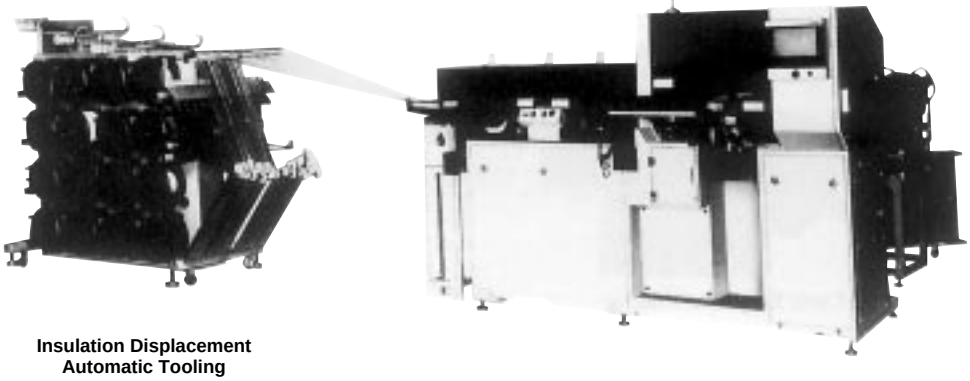

Insulation Displacement Automatic Tooling

Contact Tyco Electronics for automatic tooling options.

Air Mini Press

Part Number 909190-1
(works by butting wires)
Part Number 909190-2
(works by cutting off wires)
Harness Circuit Numbers:
Random
Applicable Cable:
Discrete Wire

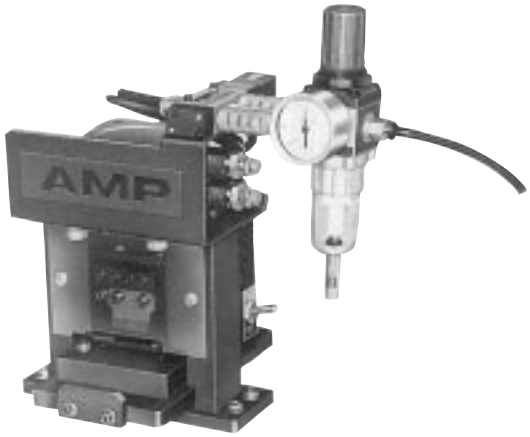

For complete product information, order Catalog 1242172

Products for Industrial & Commercial Applications
Dimensions are shown for reference purposes only.
Dimensions are in inches and millimeters unless otherwise specified. Values in brackets are metric equivalents.
Specifications subject to change.
Technical Support Center
1-800-522-6752
www.tycoelectronics.com

AMP EI Series Connectors are wire-to-board and wire-to-wire connectors. Small in size, precision-built and very economical to use, the connectors are ideally suited for compact, high density connection of wirings inside electric equipment, as well as for labor saving.

Types

There are two types of connectors available from the product line – Standard and Low Profile. In addition, a Board Mount Post Header is also available which can be used in common with both of the standard and low profile connectors.

Connectors for Wire Termination

The standard type connector consists of a receptacle connector and a plug connector. The receptacle connector is used for wire-to-wire termination when mated with the cap connector and for wire-to-board connection when mated with the post header. The plug connector is available in two styles of free-hanging and panel mounting. The low profile connector consists of a receptacle connector which, when mated with the post header, is used for wire-to-board connection. Compared with the standard type, this type of connector is .25" [6mm] shorter in its mated height.

Housing with Many Features

The housing is designed with many outstanding features. These include a locking mechanism to promote positive mating, polarization to prevent mismating, and a guide for correct alignment of contacts.

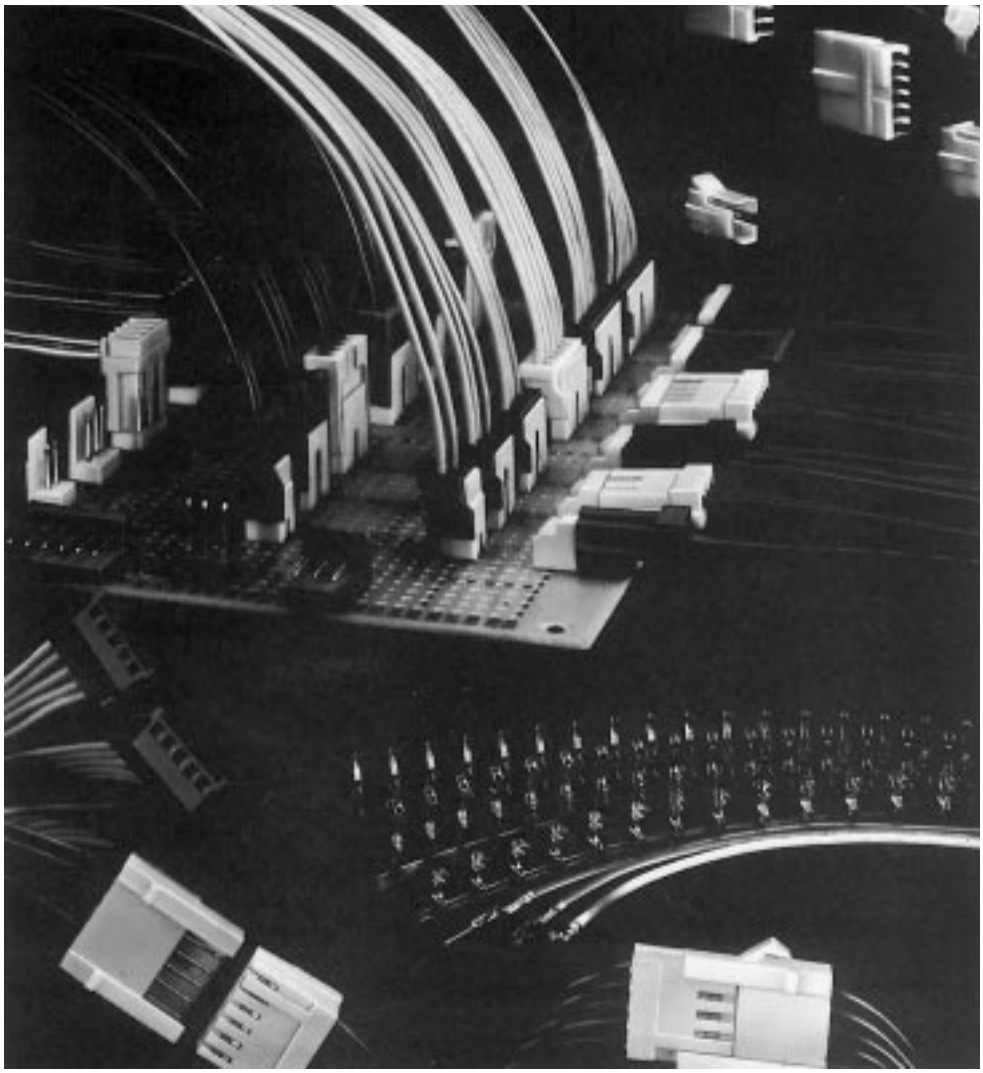

Post Header for Board Mount

The post header is available with posts on .098 [2.50] centers. There are two styles of post header; one can be mounted on the board horizontally and the other vertically. The post header is provided with devices to help prevent the wicking and splashing of flux during soldering operations. It can accommodate boards of .063 [1.60] thick.

Contacts

The receptacle contacts have a large contacting area to mate with posts or pin contacts and are of a stable, two-sided contact design. When mated, the contacting area provides a consistently high contact pressure and provides a clean surface through wiping action. As a result, it can provide a highly reliable electrical connection even when used in small current circuitry.

Wire Size Range

Standard type – AWG #30 – 20 (0.05~0.52mm^2)

Low Profile type – AWG #30 – 22 (0.05~0.35mm^2)

For complete product information, order Catalog 1242174

Products for Industrial & Commercial Applications
Dimensions are shown for reference purposes only.
Dimensions are in inches and millimeters unless otherwise specified. Values in brackets are metric equivalents.
Specifications subject to change.
Technical Support Center
1-800-522-6752
www.tycoelectronics.com

Introduction

Cap Connector (Wire Applied)

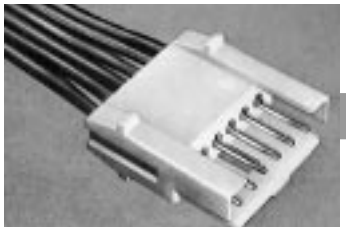

Free Hanging Type



Panel Mount Type

Post Header (Board Applied)

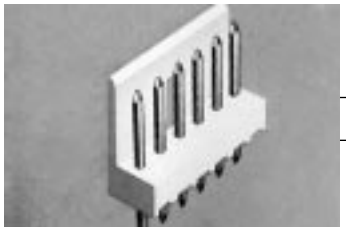



Horizontal Mount Type

<Mating Styles>

Wire-to-wire termination

Wire-to-board connection

Receptacle Connector (Wire Applied)

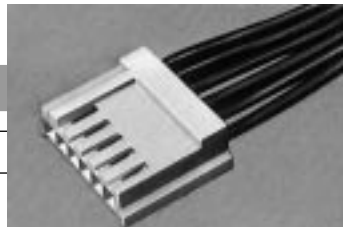

Standard Type

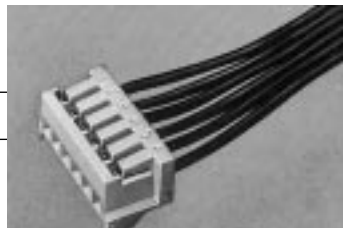

Low Profile Type

Product Specifications:

Voltage ratings —
UL 250V
(Spacing .047 [1.2] min.)
UL 600V
(Spacing .126 [3.2] min.)
CSA 250V
TÜV 125V AC/150V DC (.098 [2.5] pitch)
TÜV 250V AC/300V DC (.197 [5.0] pitch)

Current ratings:

AWG	UL	CSA	TUV
30	—	2	2
26	—	—	3
22	—	4	4
20	—	5	5

Low level resistance — 10mΩ max.

Insulation resistance — 500MΩ min. at 500V DC

Dielectric withstanding voltage — 750V AC for one minute

AMP-specified maximum operating temperature — -20~+95°C

UL-recognized operating temperature — +105°C

CSA-certified maximum operating temperature — +105°C

TÜV-specified operating temperature — -20~+85°C

TÜV-specified insulation group — B

Product Specification
108-5118

Application Specifications
114-5035 (for connectors except Low Profile types)
114-5051 (for Low Profile type connectors)

Instruction Sheets
IS-123J (Pin contacts)
IS-073J (Standard type receptacle contacts)
IS-109J (Low Profile type receptacle contacts)

For complete product information, order Catalog 1242174

Products for Industrial & Commercial Applications
Dimensions are shown for reference purposes only.
Dimensions are in inches and millimeters unless otherwise specified. Values in brackets are metric equivalents.
Specifications subject to change.
Technical Support Center
1-800-522-6752
www.tycoelectronics.com

Receptacle Connectors (Wire Applied)

Standard Type Receptacle Contacts

Material:
Pre-Tin Brass

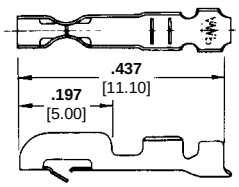

Wire Size AWG (mm²)	Wire Ins. Diameter	Contact Part Numbers Brass/Pre-Tin S.T.	Contact Part Numbers Brass/Pre-Tin L.P.	Hand Tool Part Numbers
30-26 (0.05~0.15)	.039~.055 1.00~1.40	—	170205-1	722561-1
26-20 (0.14~0.52)	.043~.075 1.10~1.90	170262-1	170204-1	722560-1

Hand Tool Instruction Sheet: IS-071J.

Standard Type Receptacle Housings for Standard Circuit .098 [2.50]

Material:
UL 94V-0 rated, 6/6 nylon

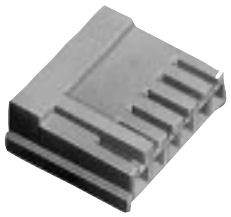

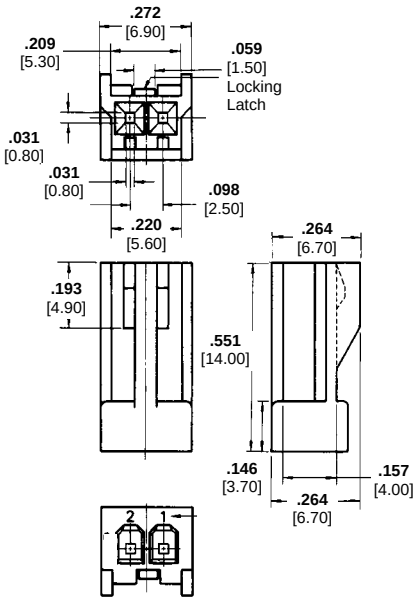

2 Position Housing

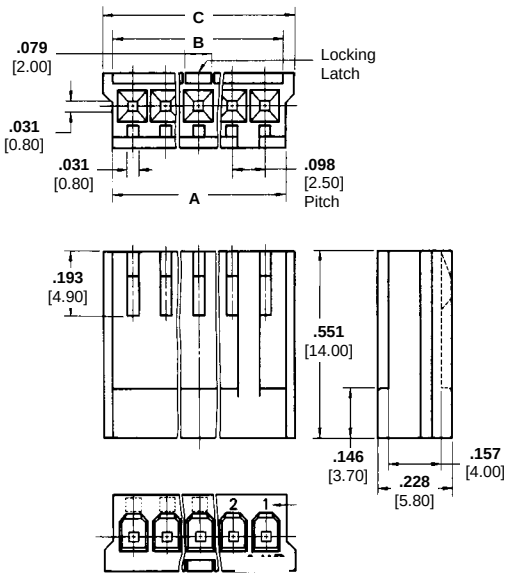

3~5 Position Housing

No. of Positions	Dimensions A	Dimensions B	Dimensions C	Part Numbers Natural
2	—	—	—	171822-2
3	.319 8.1	.307 7.8	.370 9.4	171822-3
4	.417 10.6	.406 10.3	.469 11.9	171822-4
5	.516 13.1	.504 12.8	.567 14.4	171822-5

For complete product information, order Catalog 1242174

Products for Industrial & Commercial Applications
Dimensions are shown for reference purposes only.
Dimensions are in inches and millimeters unless otherwise specified. Values in brackets are metric equivalents.
Specifications subject to change.
Technical Support Center
1-800-522-6752
www.tycoelectronics.com

Receptacle Connectors (Wire Applied)

Low Profile Type Receptacle Contacts

Material:

Pre-Tin Phosphor Bronze

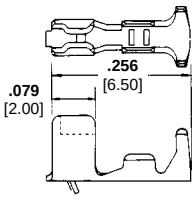

Wire Size		Wire Ins. Dia.	Contact Part No.		Hand Tool Part Numbers
AWG	mm²		S.T.	L.P.	
30-26	0.05~0.15	**.039~.059** 1.00~1.50	—	170370-1	724663-1
26-22	0.12~0.35	**.043~.075** 1.10~1.90	170354-1	170369-1	755332-1

Hand Tool Instruction Sheet: IS-099J (724663-1), IS-364J (755332-1).
Insertion Tool Number 724674-1. Extraction Tool Number 724676-1.

Low Profile Type Receptacle Housings .098 [2.50]

Material:

UL 94V-0 rated, 6/6 nylon



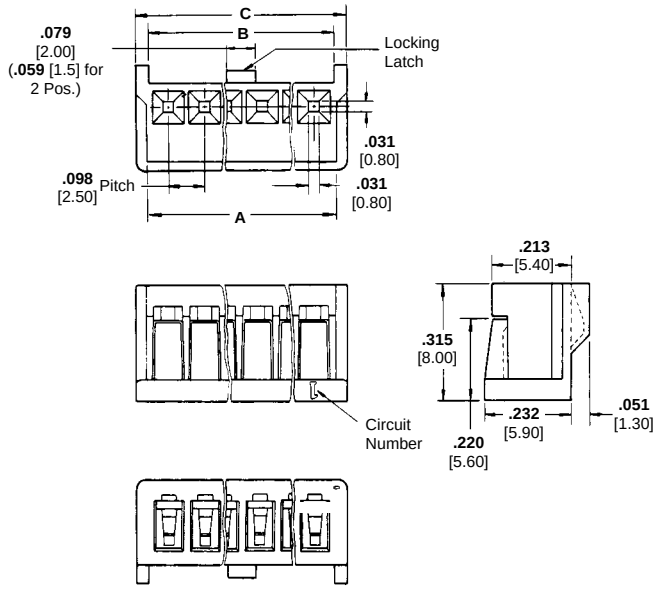

No. of Positions	Dimensions A	B	C	Part Numbers Natural
2	**.217** 5.50	**.205** 5.20	**.276** 7.00	172142-2
3	**.315** 8.00	**.303** 7.70	**.374** 9.50	172142-3
4	**.413** 10.50	**.402** 10.20	**.472** 12.00	172142-4

For complete product information, order Catalog 1242174

Products for Industrial & Commercial Applications
Dimensions are shown for reference purposes only.
Dimensions are in inches and millimeters unless otherwise specified. Values in brackets are metric equivalents.
Specifications subject to change.
Technical Support Center
1-800-522-6752
www.tycoelectronics.com

Post Headers (Board Applied)

Vertical Mount Type .098 [2.50]

Material & Finish:

Header — Recognized by UL, flame retardant grade, UL 94V-0 rated, 6/6 nylon

Post — Brass, Tin over copper plated



2 Positions

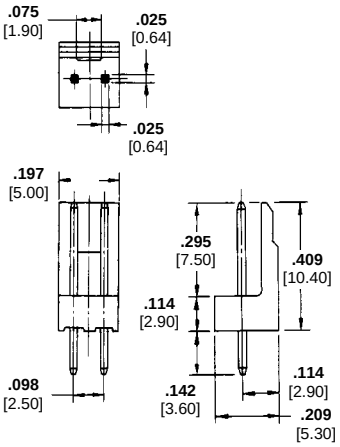

3 ~ 5 Positions

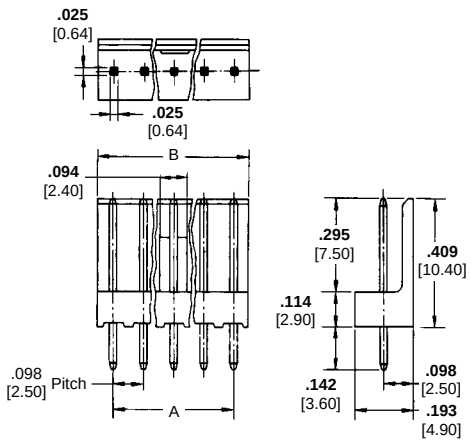

No. of Positions	Dimensions A	Dimensions B	Part Numbers Natural
2	—	—	171825-2
3	**.197** 5.00	**.295** 7.50	171825-3
4	**.295** 7.50	**.394** 10.00	171825-4
5	**.394** 10.00	**.492** 12.50	171825-5

Horizontal Mount Type .098 [2.50]

Material & Finish:

Header — Recognized by UL, flame retardant grade, UL 94V-0 rated, 6/6 nylon

Post — Brass, Tin



2 Positions

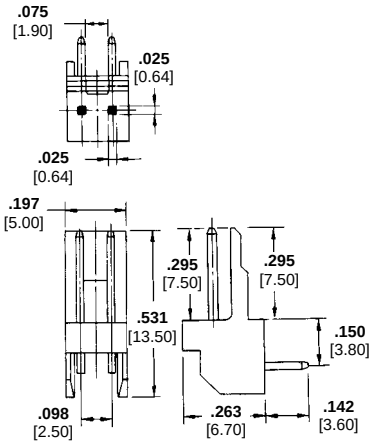

3 ~ 5 Positions

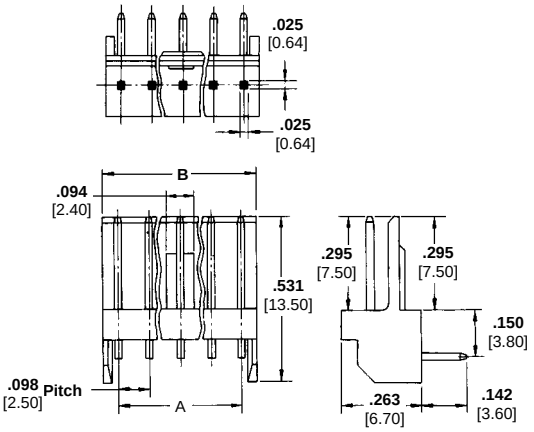

No. of Positions	Dimensions A	Dimensions B	Part Numbers Natural
2	—	—	171826-2
3	**.197** 5.00	**.295** 7.50	171826-3
4	**.295** 7.50	**.394** 10.00	171826-4
5	**.394** 10.00	**.492** 12.50	171826-5

For complete product information, order Catalog 1242174

Products for Industrial & Commercial Applications
Dimensions are shown for reference purposes only.
Dimensions are in inches and millimeters unless otherwise specified. Values in brackets are metric equivalents.
Specifications subject to change.
Technical Support Center 1-800-522-6752 www.tycoelectronics.com

Post Headers (Board Applied)

Vertical Mount Type with Self-Retaining Feature Posts .098 [2.50]

Material & Finish:

Header — UL 94V-0 rated, 6/6 nylon

Post — Brass, Tin-lead over copper plated



2 Positions

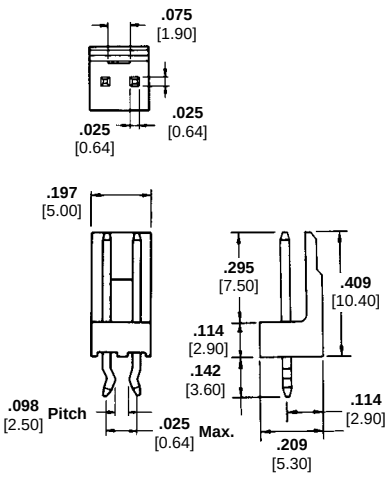

3 ~ 5 Positions

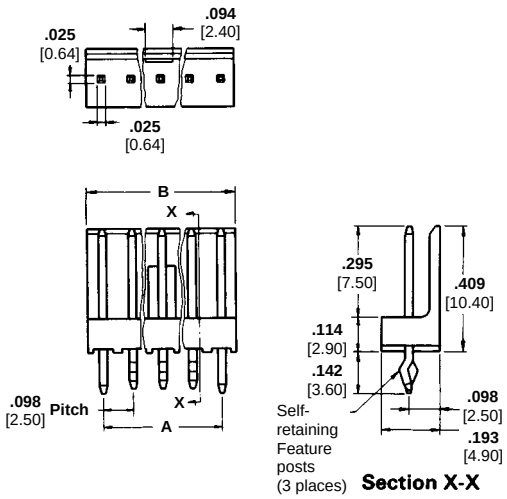

No. of Positions	Dimensions A	Dimensions B	Part Numbers Natural
2	—	—	172732-2
3	**.197** 5.00	**.295** 7.50	172732-3
4	**.295** 7.50	**.394** 10.00	172732-4
5	**.394** 10.00	**.492** 12.50	172732-5

For complete product information, order Catalog 1242174

Products for Industrial & Commercial Applications
Dimensions are shown for reference purposes only.
Dimensions are in inches and millimeters unless otherwise specified. Values in brackets are metric equivalents.
Specifications subject to change.
Technical Support Center
1-800-522-6752
www.tycoelectronics.com

Plug Connectors (Wire Applied)

Standard Type Pin Contacts

Material:

Pre-Tin Brass

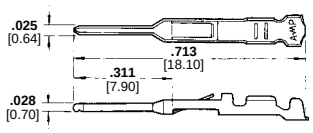

Wire Size		Wire Ins. Dia.	Contact Part Numbers Brass/Pre-Tin	
AWG	mm²		S.T	L.P.
30-26	0.05~0.15	**.394~.055** 1.00~1.40	170377-1	170430-1
26-20	0.14~0.52	**.043~.075** 1.10~1.90	170376-1	170429-1

Hand Tool Part Number 724687-1 (for AWG#30-26), 755333-1 (IS-365J) (for AWG #26-20)
Extraction Tool Part Number 724762-1

Free Hanging Style Plug Housings .098 [2.50]

Material:

UL94V-0 rated, 6/6 nylon

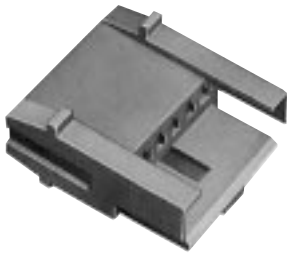

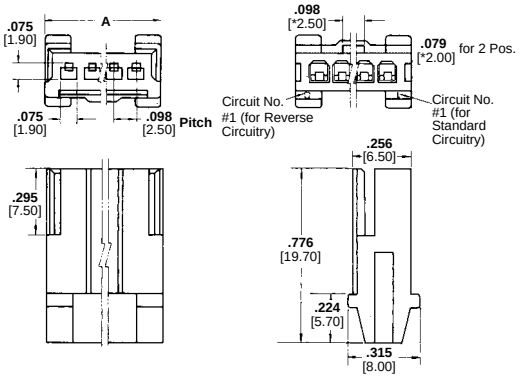

No. of Positions	Dimensions A	Part Numbers For Standard Circuit Natural
2	**.311** 7.90	172211-2
3	**.409** 10.40	172211-3
4	**.508** 12.90	172211-4
5	**.606** 15.40	172211-5

Note: Cap housing for standard circuitry Part Number 172211 mates with receptacle housing for standard circuitry Part Number 171822

Plug Housings for Panel Mount .098 [2.50]

Material:

UL 94V-0 rated, 6/6 nylon

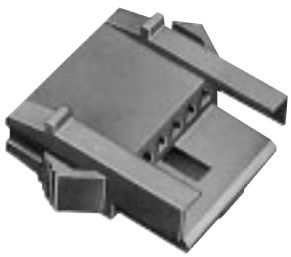

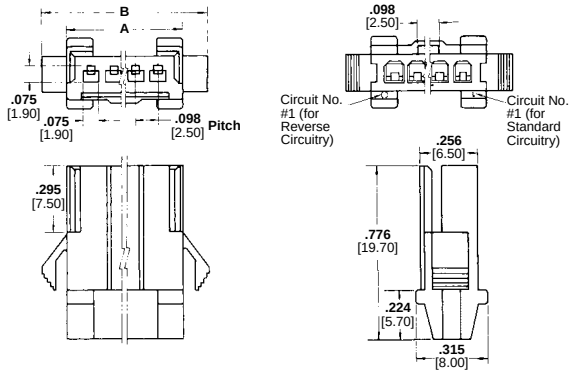

No. of Positions	Dimensions A	Dimensions B	Part Numbers For Standard Circuit Natural
3	**.409** 10.40	**.630** 16.00	172213-3
5	**.606** 15.40	**.827** 21.00	172213-5

Note: Cap housing for standard circuitry Part Number 172213 mates with receptacle housing for standard circuitry Part Number 171822

For complete product information, order Catalog 1242174

Products for Industrial & Commercial Applications
Dimensions are shown for reference purposes only.
Dimensions are in inches and millimeters unless otherwise specified. Values in brackets are metric equivalents.
Specifications subject to change.
Technical Support Center
1-800-522-6752
www.tycoelectronics.com

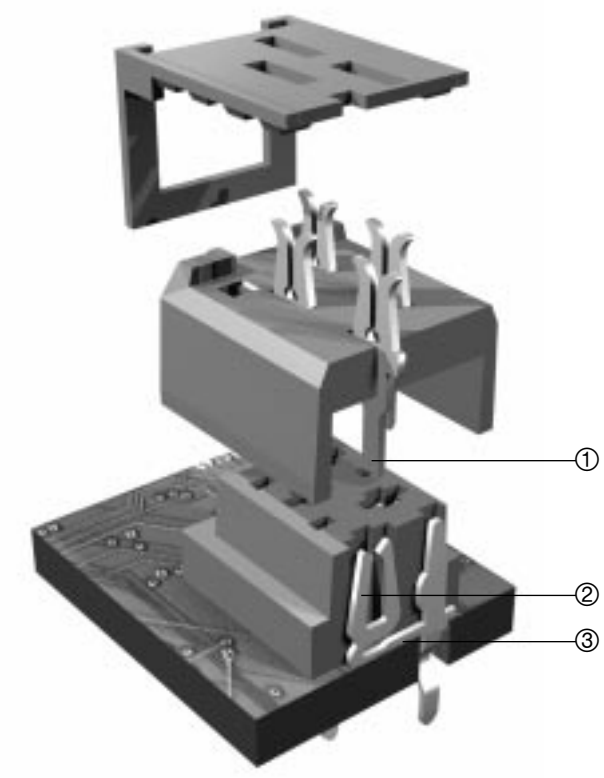

1. Contact Pin
2. Contact Spring
3. Positioning Spring

Miniaturization and the trend toward higher density of electronic functions on a substrate led to the introduction of smaller interconnection systems. The AMP Micro-MaTch connector family, with it's contact spacing of 0.05 [1.27 mm], fully complies with the electronic packaging requirements of today and the future. The system offers a range of board and wire connectors, enabling a variety of wire-to-board and board-to-board interconnections. The AMP Micro-MaTch contact concept shown on this page is essentially different from other systems available.

By its design the traditional failure mode in tinplated connections, fretting corrosion, is minimized. Due to an additional positioning spring in the female part, relative movements caused by vibrations/thermal expansion between male and female contacts are absorbed. By preventing movements on the contact spot, a gas tight connection can be obtained.

The contact spring is located in the board connector and not in the cable connector, which is usually the case. The counter part, incorporated in the cable connector, is a simple pin, either with an insulation displacement section, suitable for the mass-termination of cable or with a kinked solder leg to be soldered onto a PC Board. The separation of these two basic functions of the contact system - contact force generation and wire termination -, enables the independent optimization of both functions and also leads to relatively simple contact shapes.

Because of their shapes, contacts can be post-plated, leaving no bare edges in the contact and wire slot area. The contact spring system features an additional spring member - the positioning spring - which compensates positional tolerances. In this way the contact spring can be fully optimized for its basic function, providing the relatively high contact force required for tin plated contact systems.

For complete product information, order Catalog 1307822

Products for Industrial & Commercial Applications
Dimensions are shown for reference purposes only.
Dimensions are in inches and millimeters unless otherwise specified. Values in brackets are metric equivalents.
Specifications subject to change.
Technical Support Center
1-800-522-6752
www.tycoelectronics.com

System Overview, Technical Data

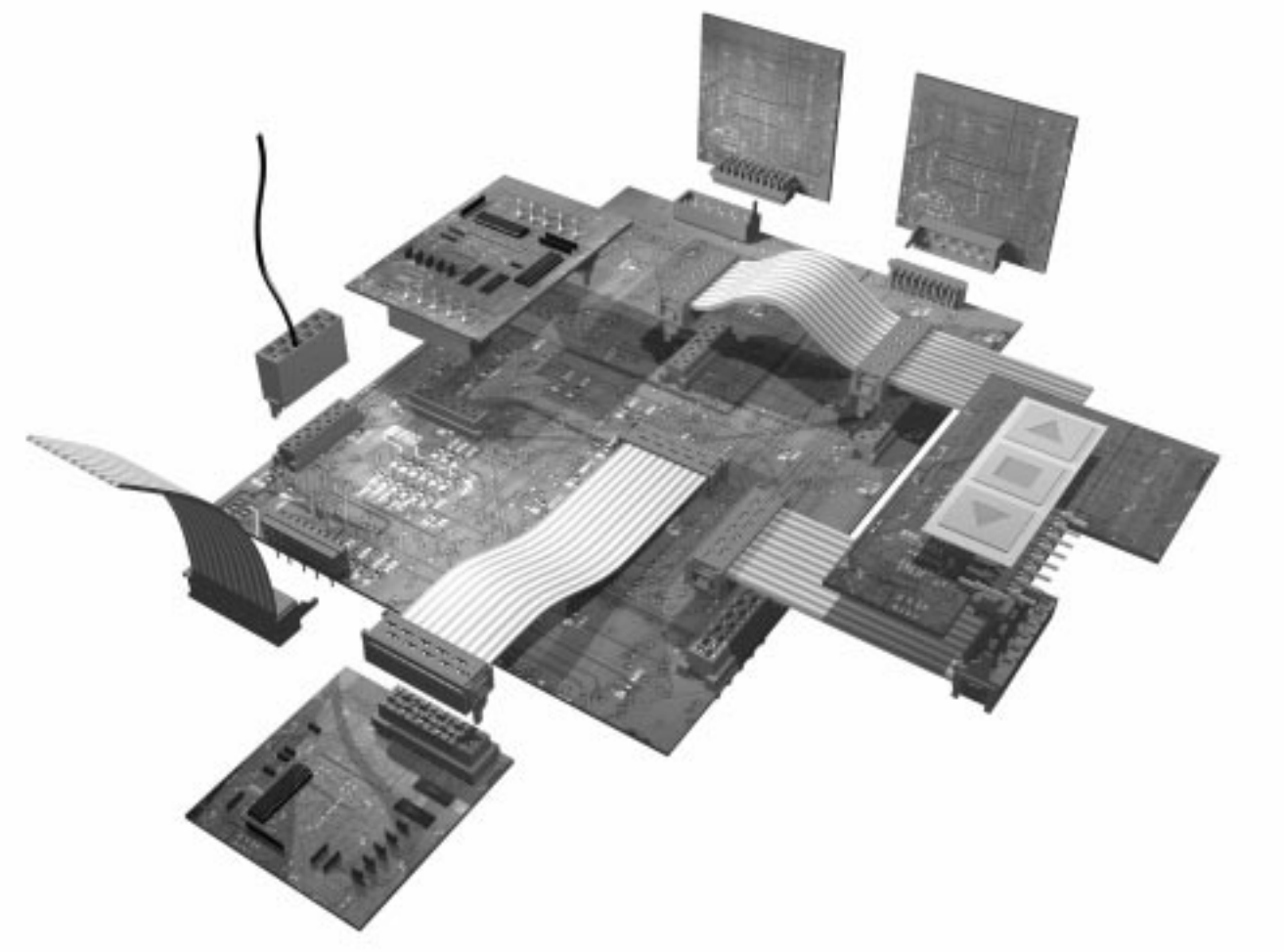

Technical Data:

Centerline — 0.050 [1.27 mm] (staggered)
Number of Positions — 4, 6, 8, 10, 12, 14, 16, 18, and 20 positions
Contact Material — Phosphor bronze
Contact Finish — Tin-lead
Housing Material — Thermoplastic polyester, red, glass-filled
For surface mount versions polyimide 4.6
Flammability rating — per UL 94 V-0
UL-recognized — File E28476 Vol. 23 Section 4
Contact Resistance — 10 MΩ max.
Insulation Resistance — 1.000 MΩ min.
Nominal Voltage — 230 V
Current Rating — 1.5 A max.
Temperature Range — -40°C to +105°C (operating)
Mating Force — 5N max. per contact
Unmating Force — 1N min. per contact
Minimum Contact Force — 2N min.

Product Specification
108-19052
Application Specification
114-19016, 114-19051

PC Board Connectors:

PC Board Thickness — 0.06 [1.6 mm] nominal
PC Board Hole Diameter — 0.03 [0.8 mm] for solder connectors

Ribbon Connectors:

Cable Type — Ribbon cable, UL Style 2651
Conductor Spacing — 0.050 [1.27 mm]
Conductor Diameter — Solid 0.01 [0.30 mm] diameter
Stranded .003 [0.08 mm²]
0.28 x 0.004-0.005 [7 x 0.12 - 0.13 mm]
(other diameters and/or configurations on request)
Insulation Type — semi-rigid PVC
Insulation Diameter — 0.04±0.004 [0.9 ± 0.1 mm]

Discrete Wire (COSI) Connectors:

Cable Type — AWG 28-24 and 24-20

For complete product information, order Catalog 1307822

Products for Industrial & Commercial Applications
Dimensions are shown for reference purposes only.
Dimensions are in inches and millimeters unless otherwise specified. Values in brackets are metric equivalents.
Specifications subject to change.
Technical Support Center
1-800-522-6752
www.tycoelectronics.com

Female-on-Board Connector

Top Entry



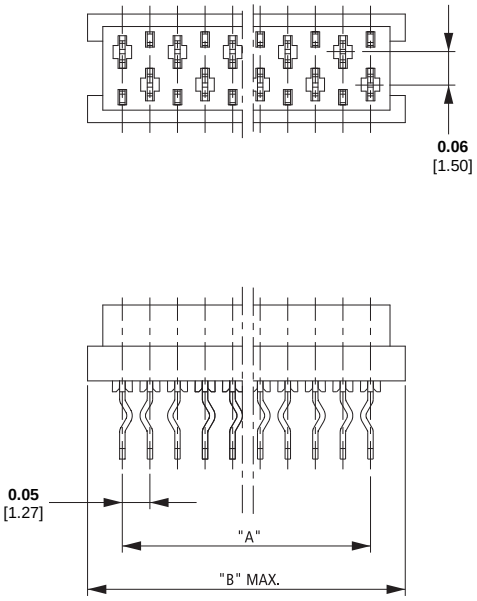

This connector version incorporates the patented AMP Micro-MaTch contact spring system and is designed to be soldered onto PC Boards with a nominal thickness of 0.06 [1.6 mm].

The solder legs are indented, providing firm retention of the connector before and during the soldering operations.

As polarization is accomplished directly between the AMP Micro-MaTch male connectors and the PC Board, this top entry female connector does not have any polarizing features. Therefore, the orientation of the connector on the PC Board is irrelevant.

Notes:
1. Connectors are always sideways mounted onto an adhesive tape.
2. Standard packaging quantity is 2500 connectors on a reel with a diameter of 23.62 [600 mm].
3. At additional charge a special packaging option is available: 250 connectors on a reel with a diameter of 9.84 [250 mm], packed in a dedicated dispenser box.

No. of Positions	Dimensions		Part Numbers	
	A	B	2500 Connectors/Reel	250 Connectors/Box
4	**0.15** 3.81	**0.28** 7.10	215079-4	7-215079-4
6	**0.25** 6.35	**0.38** 9.70	215079-6	7-215079-6
8	**0.35** 8.89	**0.48** 12.20	215079-8	7-215079-8
14	**0.65** 16.51	**0.78** 19.80	1-215079-4	8-215079-4
20	**0.95** 24.13	**1.08** 27.40	2-215079-0	9-215079-0

For complete product information, order Catalog 1307822

Products for Industrial & Commercial Applications
Dimensions are shown for reference purposes only.
Dimensions are in inches and millimeters unless otherwise specified. Values in brackets are metric equivalents.
Specifications subject to change.
Technical Support Center
1-800-522-6752
www.tycoelectronics.com

Female-on-Board Connector

Side Entry



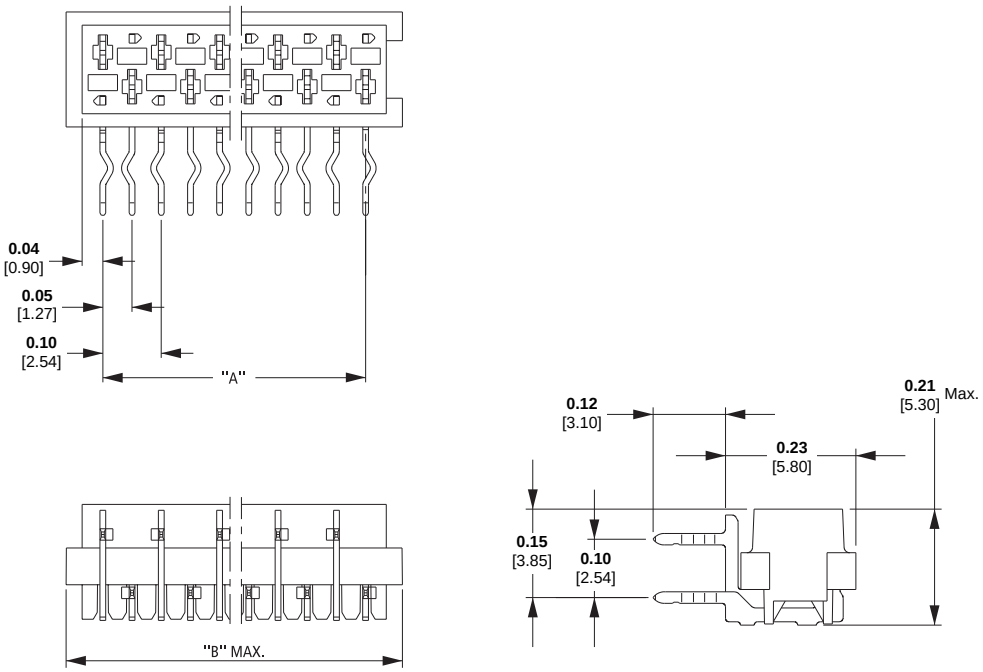

This connector version is identical to the top entry version with two exceptions:

- The solder legs are parallel to the mating face of the connector instead of perpendicular.
- It's housing is polarized, so that polarization is accomplished directly between the two mating connectors. Proper orientation of the connectors on the PC Board is relevant here.

Notes:
1. Connectors are always sideways mounted onto an adhesive tape.
2. Standard packaging quantity is 2500 connectors on a reel with a diameter of 23.62 [600 mm].
3. At additional charge a special packaging option is available: 250 connectors on a reel with a diameter of 9.84 [250 mm], packed in a dedicated dispenser box.

No. of Positions	Dimensions		Part Numbers	
	A	B	2500 Connectors/Reel	250 Connectors/Box
4	**0.15** 3.81	**0.28** 7.10	215460-4	7-215460-4
6	**0.25** 6.35	**0.38** 9.70	215460-6	7-215460-6
8	**0.35** 8.89	**0.48** 12.20	215460-8	7-215460-8
14	**0.65** 16.51	**0.78** 19.80	1-215460-4	8-215460-4
20	**0.95** 24.13	**1.08** 27.40	2-215460-0	9-215460-0

For complete product information, order Catalog 1307822

Products for Industrial & Commercial Applications
Dimensions are shown for reference purposes only.
Dimensions are in inches and millimeters unless otherwise specified. Values in brackets are metric equivalents.
Specifications subject to change.
Technical Support Center
1-800-522-6752
www.tycoelectronics.com

Male-on-Board Connector

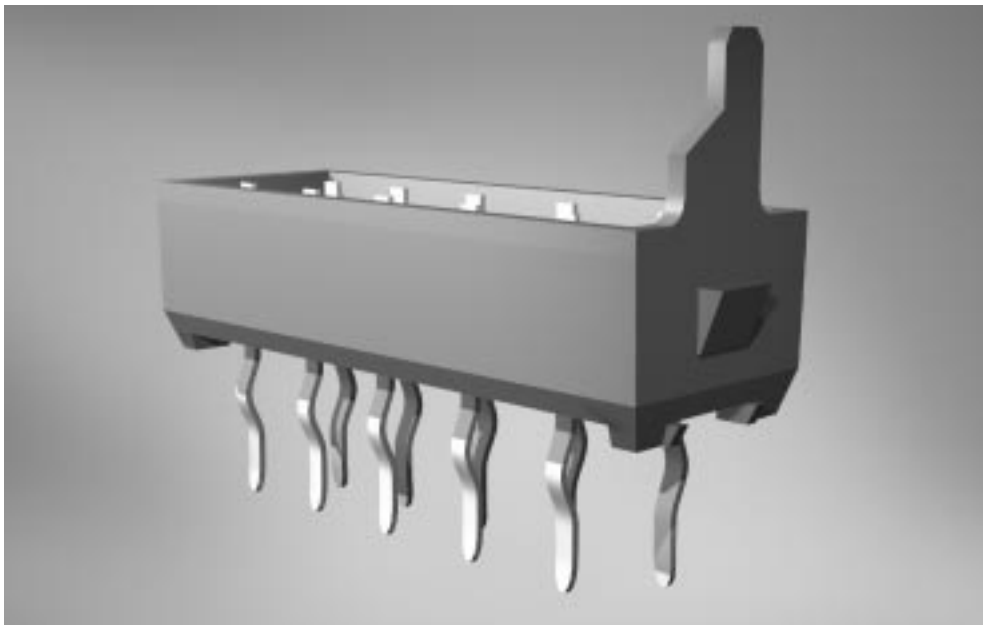

This male connector version is designed to be soldered onto PC Boards with a nominal thickness of .06[1.6].

The solder legs are indented for firm retention of the connector in the PC Board.

The connector housing features a polarizing pin on one end for proper orientation of this connector version.

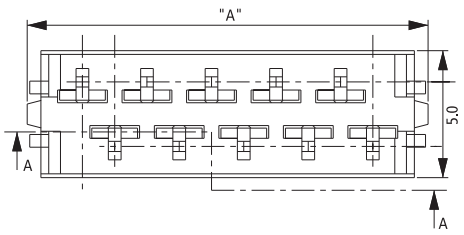

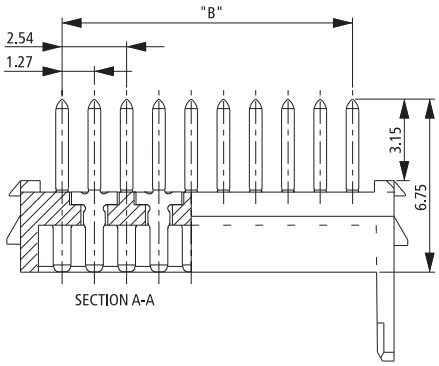

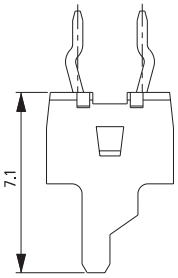

Notes:
1. Connectors are always sideways mounted onto an adhesive tape.
2. Standard packaging quantity is 2500 connectors on a reel with a diameter of 23.62[600mm].
3. At additional charge a special packaging option is available: 250 connectors on a reel with a diameter of 9.84[250mm], packed in a dedicated dispenser box.

No. of Positions	Dimensions		Part Numbers	
	A	B	2500 Connectors/Reel	250 Connectors/Box
4	**.15** [3.81]	**.28** [7.1]	215464-4	7-215464-4
6	**.25** [6.35]	**.38** [9.7]	215464-6	7-215464-6
8	**.35** [8.89]	**.48** [12.2]	215464-8	7-215464-8
14	**.65** [16.51]	**.78** [19.8]	1-215464-4	8-215464-4
20	**.95** [24.13]	**1.08** [27.4]	2-215464-0	9-215464-0

For complete product information, order Catalog 1307822

Male-on-Wire Connector

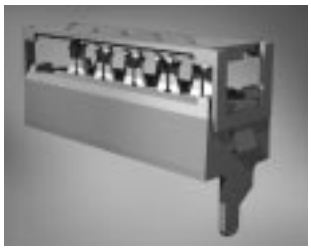

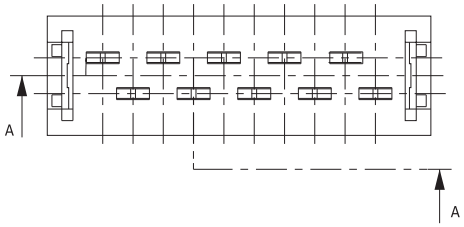

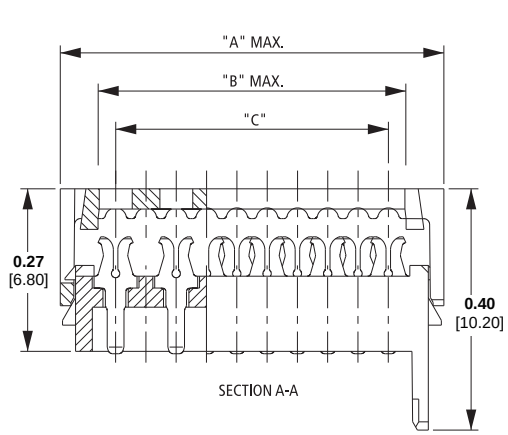

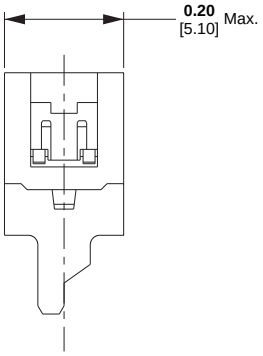

For the wire connection, a well-known AMP-LATCH type blade with a single slot is used. The insides of the slots are tin plated for stable and reliable connections.

The connector is supplied with a pre-assembled cover, providing excellent positioning of the ribbon cable before and during the insulation displacement process.

After termination the cover is held in place by each individual contact in addition to two plastic latches at both ends of the connector.

Remark:
The AMP Micro-MaTch Male-on-Wire connector is specifically designed to be disengaged from its counterpart by pulling the cable in the appropriate direction.

Notes:
1. Connectors are always sideways mounted onto an adhesive tape.
2. Standard packaging quantity is 2500 connectors on a reel with a diameter of 23.62 [600 mm].
3. At additional charge a special packaging option is available: 250 diameter of 9.84 [250 mm], packed in a dedicated dispenser box.

No. of Positions	Dimensions			Part Numbers	
	A	B	C	2500 Connectors/Reel	250 Connectors/Box
4	**0.34** 8.60	**0.21** 5.40	**0.15** 3.81	215083-4	7-215083-4
6	**0.44** 11.10	**0.31** 8.00	**0.25** 6.35	—	7-215083-6
8	**0.14** 3.60	**0.41** 10.50	**0.35** 8.89	—	7-215083-8
14	**0.84** 21.30	**0.71** 18.10	**0.65** 16.51	1-215083-4	8-215083-4
20	**1.14** 28.90	**1.01** 25.70	**0.95** 24.13	2-215083-0	9-215083-0

For complete product information, order Catalog 1307822

Products for Industrial & Commercial Applications
Dimensions are shown for reference purposes only.
Dimensions are in inches and millimeters unless otherwise specified. Values in brackets are metric equivalents.
Specifications subject to change.
Technical Support Center
1-800-522-6752
www.tycoelectronics.com

Application Tooling



Pistol handgrip tooling. This is a handtool for terminating Micro-MaTch Male-on-Wire and Paddle Board connectors. Meant for small quantities or repair services. Pistol handgrip and adapter must be ordered separately.



Standard pistol handgrip Part Number 734155-1. This basic tool can be used for both Micro-MaTch and AMP-LATCH applications.

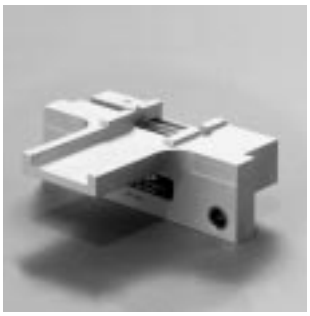

Pistol handgrip adapter set Part Number 734024-1. This adapter can be used for Micro-MaTch terminations, together with the pistol handgrip.



Bench press tooling Part Number 733280-3. This complete tool includes a Micro-MaTch dedicated tool set mounted on the bench press Part Number 654173-2.



Bench press Part Number 91085-2. This basic press is a hand operated version. This press can also be obtained in a pneumatically operated version; Part Number 91112-3.



Bench press tool set Part Number 733278-2. This tool set is designed especially for Micro-MaTch. It fits both pneumatically and hand operated press.



Semi automatic tooling Part Number 677410-1. This tool can be used for Micro-MaTch lead end and for daisy chain assembly applications.

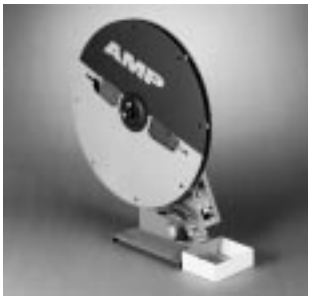

Semi automatic tooling Part Number 677412-5. For Micro-MaTch only and Part Number 1-677412-0 for both Micro-MaTch and AMP-LATCH. This machine can be used for lead end assemblies.



Connector dispenser Part Number 677463-1. The dispenser accepts the Micro-MaTch standard reels (2500 pcs/reel). It automatically removes the pre-set connector quantity from the reel and drops it in a separate box. Quantity can easily be programmed by the user.

For complete product information, order Catalog 1307822

AMP-BARREL Terminals

Product Facts

- **Unique insulation displacement technology**
- **Eliminates wire preparation—no stripping or soldering**
- **Capable of being wave-soldered to pc board with other components, enabling wires to be terminated at a more conducive time and location**
- **Anti-solder wicking design**
- **Accepts a wide range of wire sizes, solid or stranded**
- **Available in single and two-wire version**
- **Reusable terminal**
- **Available in loose-piece or strip version**
- **Semiautomatic insertion machine for strip version**
- **Simple, rugged low cost wire insertion tool**
- **Recognized under the Component Program of Underwriters Laboratories Inc., File No. E28476**

Technical Documents:

Product Specifications
108-6043 .070 [1.78] Diameter Terminal
108-6044 .090 [2.29] Diameter Terminal
108-6025 .125 [3.18] Diameter Terminal
108-6026 .156 [3.96] Diameter Terminal

Application Specification
114-6000 AMP-BARREL Terminals

Instruction Sheets
408-3187, 408-6505, 408-6553

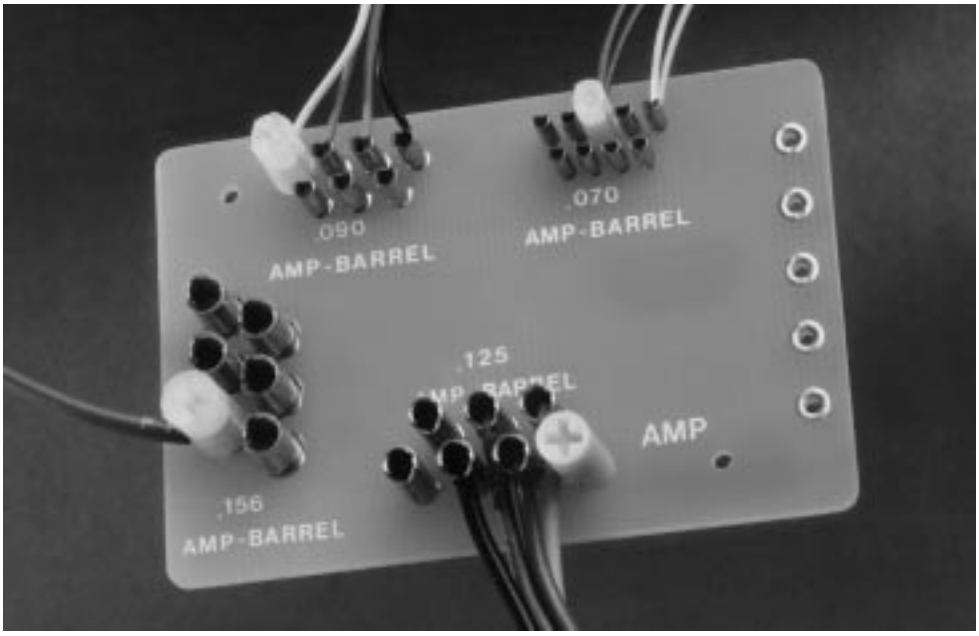

AMP-BARREL Terminals solve the problem of interconnecting discrete wires to printed circuit boards without permanently soldering them in place, and provide cost savings by eliminating the need for two-piece terminal systems, terminal strips or expensive space-consuming modular connectors.

These unique insulation displacement terminals are suitable for most printed circuit boards from .047 [1.19] to .125 [3.18] thick and are mounted in a space-saving, free-standing manner wherever required.

AMP-BARREL Terminals are available in loose piece or strip form for semiautomatic machine insertion. Upon insertion, they may be hand or wave-soldered with other components without solder wicking into the wire termination area.

Termination is achieved by placing the end of a pre-cut unstripped wire horizontally to the board at the top of the AMP-BARREL Terminal. Insertion to the proper depth is accomplished by the use of a simple, low-cost screwdriver type tool or low cost plastic stuffer cap. These caps use a standard Phillips type screwdriver to terminate the wire. When left in place on the terminal they provide strain relief and insulation. They may be removed and reused for field changes and/or repairs. The high compliancy of the terminal provides for a highly reliable, stable interconnection and withstands most extreme temperature, vibration and shock.

AMP-BARREL Terminals offer the added benefit of accepting a wide wire range, solid or stranded, within the same terminal. The .125 [3.18] diameter AMP-BARREL Terminal accepts a wire range of 28-18 AWG [0.08-0.8 mm^2] with a maximum insulation diameter of .086 [2.18]. It is made of high strength, high ductility, pre-tinned phosphor bronze and accepts one or two wires of the same type that may vary in size by one wire gage. The C-shaped cross-slot provides for a reliable two-wire termination.

This product also offers a wire cutoff version which allows the wire to be placed across the top of the terminal where the hand tool terminates and trims the wire in one action.

Similarly constructed, but of smaller size, are the .070 [1.78] and .090 [2.29] diameter AMP-BARREL Terminals. These terminals accept, respectively, wire sizes of 28-26 AWG [0.08-0.15 mm^2] with a maximum insulation diameter of .036 [0.91] and 28-22 AWG [0.08-0.4 mm^2] with a maximum insulation diameter of .053 [1.35]. They also will accept two wires of the same gage and type.

The .156 [3.96] diameter AMP-BARREL Terminal accepts a wire range of 24-18 AWG [0.2-0.8 mm^2] with a maximum insulation diameter of .115 [2.92]. It is made of tin-lead plated brass and will accept one wire per terminal.

All AMP-BARREL Terminals are reusable. This feature is extremely important when correcting wiring errors, making field repairs or modifications.

For complete product information, order Catalog 82159

Products for Industrial & Commercial Applications
Dimensions are shown for reference purposes only.
Dimensions are in inches and millimeters unless otherwise specified. Values in brackets are metric equivalents.
Specifications subject to change.
Technical Support Center
1-800-522-6752
www.tycoelectronics.com

AMP-BARREL Terminals

.070 [1.78] and .090 [2.29] Terminals

Material and Finish:

Pretinned phosphor bronze

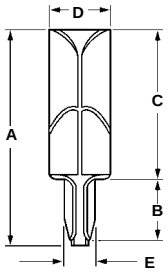

.156 [3.96] Terminals

Material and Finish:

Tin-lead plated brass

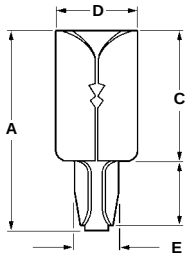

.125 [3.18] Terminals

Material and Finish:

Pretinned phosphor bronze

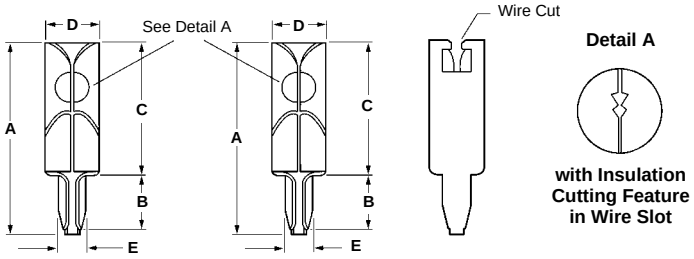

Standard **with Wire Cutoff Feature**

Terminal Size	Conductor (solid or stranded)				PC Board		Terminal Dimensions					Part Numbers	
	Wire Size Range AWG	Wire Size Range mm²	Max. Ins. O.D.	Wire per Terminal	Thk. Range	Mtg. Hole Dia.	A	B	C	D	E	Loose Pc.	Strip
.090 2.29	28-22	0.08-0.4	**.053** 1.35	1 or 2	**.047-.094** 1.19-2.39	**.050-.054** 1.27-1.37	**.340** 8.64	**.120** 3.05	**.210** 5.33	**.090** 2.24	**.056** 1.42	552967-1	—
.125 3.18 Standard	28-18	0.08-0.8	**.086** 2.18	1 or 2	**.062-.094** 1.57-2.39	**.061-.065** 1.55-1.65	**.458** 11.63	**.118** 3.00	**.325** 8.26	**.125** 3.18	**.067** 1.70	552699-1*	—
					.062-.094 1.57-2.39	**.061-.065** 1.55-1.65	**.458** 11.63	**.118** 3.00	**.325** 8.26	**.125** 3.18	**.067** 1.70	552699-4	—
					.062-.125 1.57-3.18	**.061-.065** 1.55-1.65	**	**.118** 3.00	**.325** 8.26	**.125** 3.18	**.067** 1.70	—	552699-5
.156 3.96	24-18	0.2-0.8	**.115** 2.92	1	**.062-.094** 1.57-2.39	**.078-.082** 1.98-2.08	**.390** 9.91	**.125** 3.18	**.250** 6.35	**.156** 3.96	**.084** 2.13	552770-1	—

*Has tough insulation cutting feature in wire slot (see Detail A in illustration). These barrels are not recommended for smaller standard wires.
**Cutoff is adjustable depending on board thickness.

Notes: 1. .070 [1.78] and .090 [2.29] terminals accept two wires of the same gage and type.
2. The .125 [3.18] terminal accepts two wires of the same type that may vary in size by one wire gage.
3. .070 [1.78] and .090 [2.29] terminals have a solder resist material on the inside of barrel which prevents solder wicking.

Wire Stuffer Caps

Product Facts

- **Insulates**
- **Provides strain relief**
- **Acts as field service repair tool**

Material and Finish:

Thermoplastic



Wire Size Range AWG	Wire Size Range mm²	Color	For Use With Terminal Part Numbers	Wire Stuffer Cap Part Numbers
28-22	0.08-0.4	Natural	552967	553594-1
22-18	0.4-0.8	Yellow	552699	230707-1
28-24	0.08-0.2	Natural	552699	230707-3
24-18	0.2-0.8	Natural	552770	553595-1

For complete product information, order Catalog 82159

Products for Industrial & Commercial Applications
Dimensions are shown for reference purposes only.
Dimensions are in inches and millimeters unless otherwise specified. Values in brackets are metric equivalents.
Specifications subject to change.
Technical Support Center
1-800-522-6752
www.tycoelectronics.com

Test Probe Receptacles

Product Facts

- **Leg mounts are "V" shaped to promote solder wicking and consistent fillets**
- **Receptacle is recessed in housing to prevent shorting or flashover**
- **Probe may be inserted in either end of test probe receptacle, except Type C**
- **Housing color is molded, not dyed**
- **Accepts .080±.001 [2.03±0.025] probes**

Material and Finish:

Housing—Nylon type 6/6

Contact—Beryllium copper

Receptacle and Legs—Brass, ASTM B36, Alloy 6

Contact Plating—See table below

Technical Document:

Product Specification
108-1082 Receptacle, Test Probe

Performance Characteristics:

Insulation Resistance — 10,000 megohms

Retention Value — 16 oz. [4.45 N]

Operating Temperature — 55°C to 85°C



The Tyco Electronics line of Test Probe Receptacles is designed to provide low-cost test probe capability of circuits on pc boards, without interruption of operating currents, with precise reliability.

Receptacles are available with either two or three mounting legs. Two legs of a tri-leg mount are not part of the live testing circuit. Receptacles are also available either in the standard height, or in a taller height (to permit probing at any position on the board where clearance to probe is necessary). The three-leg mount gives maximum stability. The two-leg mount yields maximum density.

The present line of test probe receptacles fits a range of board thicknesses from 1/32 to 1/8 depending on the length of the receptacle legs. The legs mount in .052 [1.32] diameter holes.

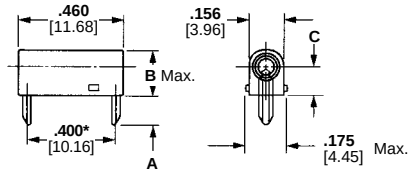

Type A

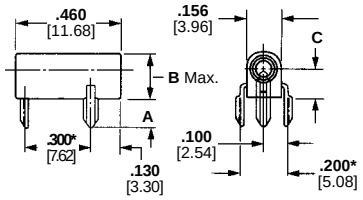

Type B

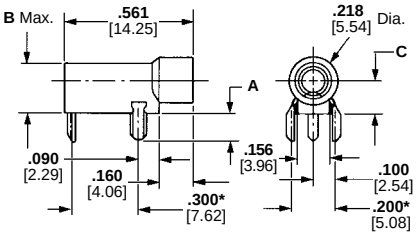

Type C

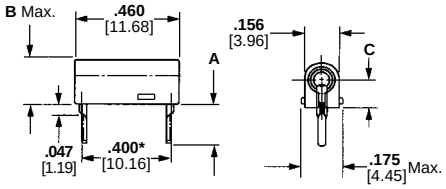

Type D

*Mounting hole location for .050-.054 [1.27-1.37] dia. holes.

Color Suffix Table

Suffix Dash Number	Housing Color
-0	Black
-1	Brown
-2	Red
-3	Orange
-4	Yellow
-5	Green
-6	Blue
-7	Violet
-8	Gray
-9	White

Type	Contact Finish	Dimensions A	Dimensions B	Dimensions C	Housing Colors	Part Numbers**
A	Bright Tin-Lead	.130 3.30	.230 5.84	.138 3.51	See Table	1-582118-x
	Silver	.130 3.30	.230 5.84	.138 3.51	See Table	2-582118-x
	Gold	.130 3.30	.230 5.84	.138 3.51	See Table	3-582118-x
	Gold	.130 3.30	.467 11.86	.375 9.53	See Table	3-582340-x
B	Gold	.130 3.30	.230 5.84	.138 3.51	See Table	3-582119-x
C	Gold	.130 3.30	.230 5.84	.138 3.51	See Table	350180-x
D	Gold	.180 4.57	.230 5.84	.138 3.51	See Table	1-380736-x
	Bright Tin-Lead	.180 4.57	.230 5.84	.138 3.51	Green	3-380736-5

**Part numbers with a numerical suffix are only for the specific color listed in the chart.

For complete product information, order Catalog 82159

Products for Industrial & Commercial Applications

Dimensions are shown for reference purposes only.

Dimensions are in inches and millimeters unless otherwise specified. Values in brackets are metric equivalents.

Specifications subject to change.

Technical Support Center
1-800-522-6752
www.tycoelectronics.com

Power Taps

Product Facts

- **ACTION PIN contacts eliminate soldering**
- **Provides high current, separable connection to pc board traces**
- **Wire-to-board connection using common terminals**
- **All metal-to-metal assembly for long-term integrity**
- **Standard DIP outlines (.300 x .100 [7.62 x 2.54]), 10 positions, and .250 x .125 [6.35 x 3.18], 6 and 10 positions, plus high current versions on .400 x .200 [10.16 x 5.08] footprint in 4 and 6 positions, .300 x .100 [7.62 x 2.54] in 8 positions, and both 2 and 3 position in-line .100 [2.54] tab taps**
- **Low resistance interface**
- **Internally threaded tap to secure screw to terminal**
- **Anti-rotational embossments hold wire and terminal in place**
- **Standard Power Taps rated at 2.5 amps per pin— 6 position 15 amps, 10 position 25 amps current carrying capability**
- **High Current Power Taps rated at up to 5 amps per pin— 2 position 10 amps, 3 position 15 amps, 4 and 6 position 20 amps and 8 position 40 amps**

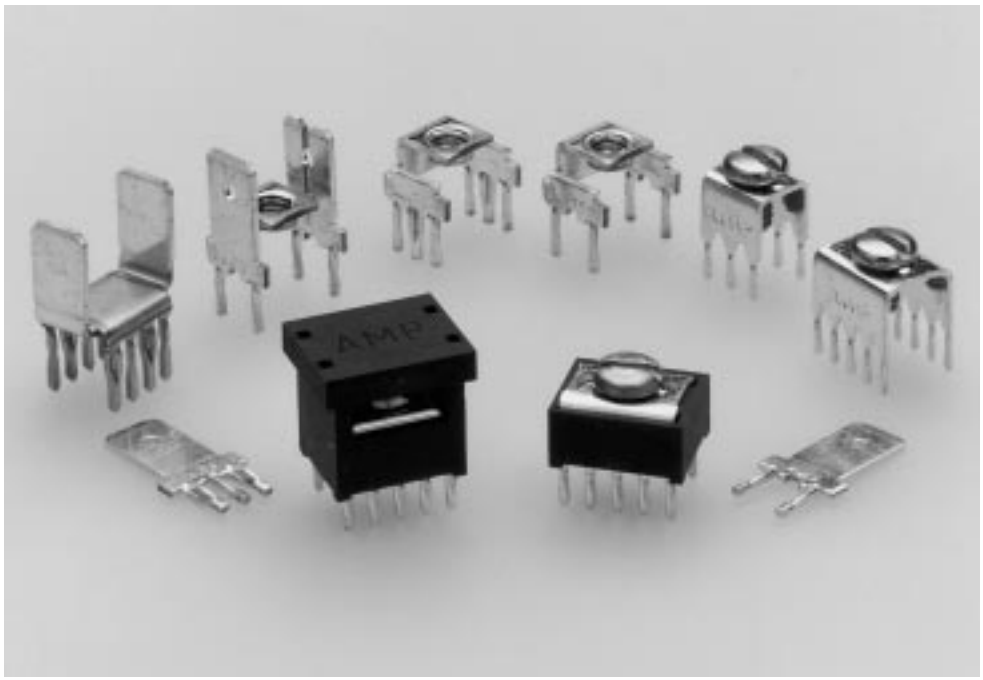

AMP Power Taps are designed for the growing need for power to printed circuit board applications required in today's electronic industry. The taps provide a high current, separable connection to a pc board. Pin configuration is of the standard DIP outline with .300 x .100 [7.62 x 2.54] or .250 x .125 [6.35 x 3.18] for the Standard versions, plus .400 x .200 [10.16 x 5.08], .300 x .100 [7.62 x 2.54] and in-line spacing for the High Current versions.

ACTION PIN contacts provide a low resistance interface with tin-plated through holes in the pc board, thereby eliminating the need for soldering.

The variety of available power taps allow for various installation schemes. The Uninsulated Tap and Low Profile Tap can be used in bus bar pattern. The High Profile and Low Profile Taps offer insulation protection from other components. The High Current versions provide a greater power density option with current ratings from 10 amps on the 2 position in-line .250 [6.35] tab tap up to 40 amps on the 8 position dual .250 [6.35] tab tap.

All AMP Power Tap configurations are easily inserted into the pc board with a simple Tyco Electronics or customer supplied tool.

For complete product information, order Catalog 82159

Products for Industrial & Commercial Applications
Dimensions are shown for reference purposes only.
Dimensions are in inches and millimeters unless otherwise specified. Values in brackets are metric equivalents.
Specifications subject to change.
Technical Support Center
1-800-522-6752
www.tycoelectronics.com

Standard Power Taps

Standard Insulated Power Taps

Material and Finish:

Connector Body and Lid—Nylon, 105°C, 94V-0 rated

Contact—Copper alloy, bright tin-lead plated

Screw—Plated steel

Electrical and Mechanical Characteristics:

Resistance—2 milliohms, max. (stud hole to ACTION PIN contact)

Insertion Force—40 lbs. [177.9 N], max. per pin

Retention Force—7 lbs. [31.1 N], min. per pin

Technical Documents:

Product Specification
108-11030 Tap, Power Distribution

Application Specification
114-11000 Tap, Power Distribution

Handbook
5697 Guide to Application of ACTION PIN Connectors

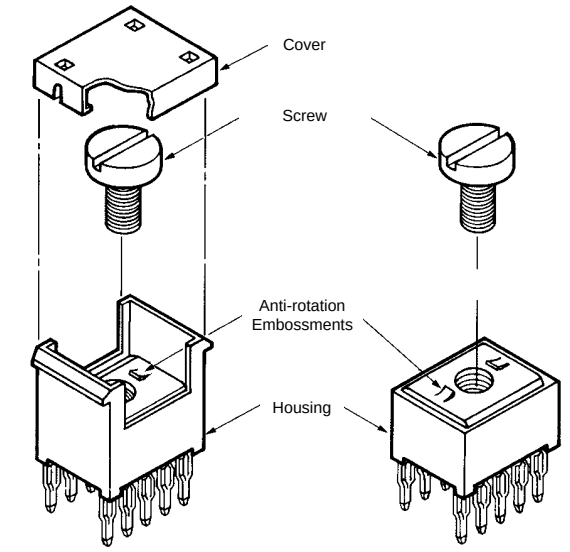

.300 x .100 [7.62 x 2.54]
High Profile Tap
10 Position

.300 x .100 [7.62 x 2.54]
Low Profile Tap
10 Position

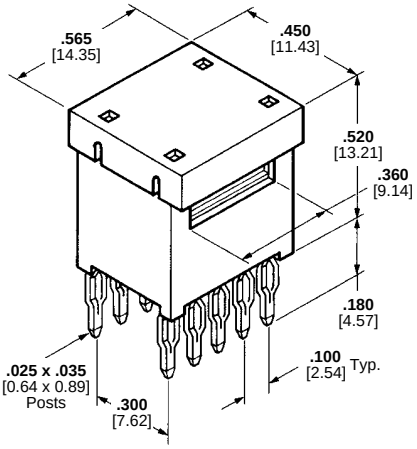

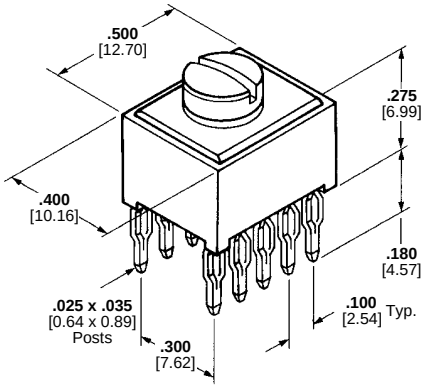

No. of Positions	Tap Version	Pcb Thickness	Description	Screw Hole Size	Part Numbers
10	High Profile	**.062-.125** 1.57-3.18	Housing and contact assembled without screw[1]	6-32	55557-3
	High Profile	**.062-.125** 1.57-3.18	Housing and contact assembled with screw[1,2]	6-32	55557-4
	Low Profile	**.062-.125** 1.57-3.18	Housing and contact assembled with screw[2]	6-32	55556-4
	Low Profile	**.062-.125** 1.57-3.18	Housing and contact assembled with screw[2,3]	6-32	55673-2
	Low Profile	**.062-.125** 1.57-3.18	Housing and contact assembled without screw	6-32	55556-3
	Low Profile	**.062-.125** 1.57-3.18	Housing and contact assembled without screw	M4	55556-9
6	Low Profile	**.062-.125** 1.57-3.18	Housing and contact assembled with screw[2]	4-40	796131-2

[1] Cover not assembled
[2] Screw not assembled
[3] No anti-rotational embossments

For complete product information, order Catalog 82159

Products for Industrial & Commercial Applications
Dimensions are shown for reference purposes only.
Dimensions are in inches and millimeters unless otherwise specified. Values in brackets are metric equivalents.
Specifications subject to change.
Technical Support Center
1-800-522-6752
www.tycoelectronics.com

Standard Power Taps

Standard Uninsulated Power Taps

Material and Finish:

Contact—Copper alloy, post plated bright tin-lead

Screw—Stainless steel, passivated

Electrical and Mechanical Characteristics:

Resistance—2 milliohms, max. (stud hole to ACTION PIN contact)

Insertion Force—40 lbs. [177.9 N] max. per pin

Retention Force—7 lbs. [31.1 N] min. per pin

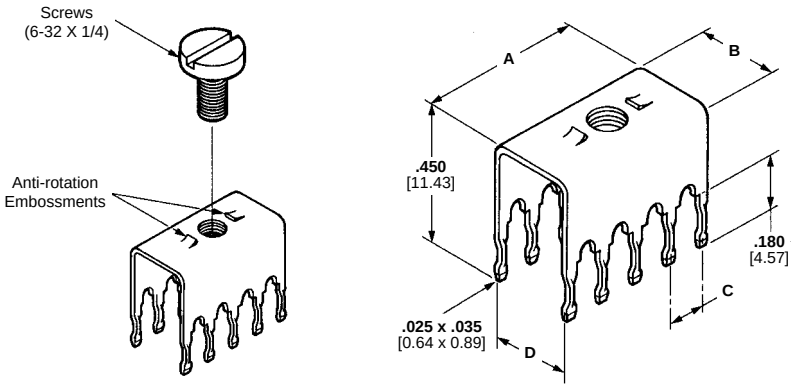

Size	Pcb Thickness	Dimensions A	B	C	D	Description	Screw Size	Part Numbers
.300 x .100 7.62 x 2.54 10 Position	**.062-.125** 1.57-3.18	**.440** 11.18	**.325** 8.26	**.100** 2.54	**.300** 7.62	Without Screw	6-32	55558-3
						With Screw	6-32	55558-4
						Without Screw	6-32	55558-7[1]
.250 x .125 6.35 x 3.18 6 Position	**.062-.125** 1.57-3.18	**.320** 8.13	**.275** 6.99	**.125** 3.18	**.250** 6.35	Without Screw	6-32	55323-5
						With Screw	6-32	55323-9
.250 x .125 6.35 x 3.18 10 Position	**.062-.125** 1.57-3.18	**.570** 14.48	**.275** 6.99	**.125** 3.18	**.250** 6.35	Without Screw	6-32	55323-6

[1] No Anti-rotation Embossments

High Current Power Tap

6 Position High Current* Power Tap

*Up to 20 amps

Material and Finish:

Contact—Phosphor bronze, tin-lead plated

Screw—Stainless steel, passivated

Electrical and Mechanical Characteristics:

Current Rating—20 amperes max.

Insertion Force—40 lbs. [180 N] max. per pin

Retention Force—7 lbs. [30 N] min. per pin

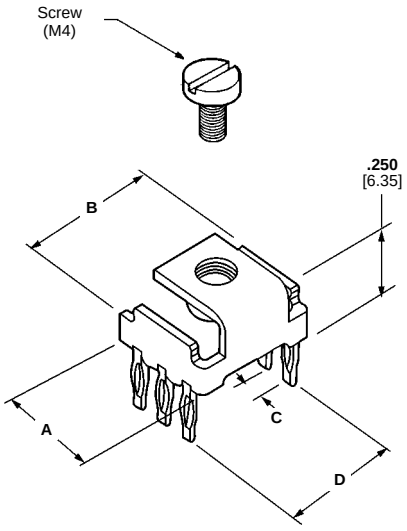

Size	Pcb Thickness	Dimensions A	B	C	D	Description[1]	Part Number
6 Position	**.062-.125** 1.57-3.18	**.358** 9.09	**.431** 10.95	**.100** 2.54	**.400** 10.16	With Screw	213816-1

[1] No Anti-rotation Embossments featured on High Current Taps. Therefore, if application requires, use of Bellville lockwashers with a high surface contact area are strongly recommended.

For complete product information, order Catalog 82159

Products for Industrial & Commercial Applications
Dimensions are shown for reference purposes only.
Dimensions are in inches and millimeters unless otherwise specified. Values in brackets are metric equivalents.
Specifications subject to change.
Technical Support Center
1-800-522-6752
www.tycoelectronics.com

High Current* Power Taps

8 Position Dual .250 Tab Taps (with ACTION PIN Posts)

*Up to 5 amps per pin

Material and Finish:

Contact—Phosphor bronze, post plated tin-lead
Screw—Stainless steel, passivated
Washer—Stainless steel

Electrical and Mechanical Characteristics:

Current Rating—5 amps max. per pin
Insertion Force—40 lbs. [180 N] max. per pin

Related Product Data:

Mates with — .250 FASTON Receptacles

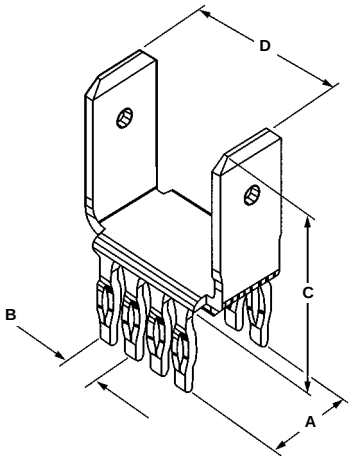

Style IV

Style	Pcb Thickness	Dimensions A	B	C	D	Tab Configuration	Part Number	Mates With
IV	**.125** 3.18	**.300** 7.62	**.100** 2.54	**.485** 12.32	**.500** 12.7	Two **.250 x .032** 6.35 x 0.81 Tabs With Dimple	167892-2[1] / 167892-3	FASTON Receptacles

[1] Selective tin-lead plating on mating surface of both tabs.

Insertion Tooling

Manual Arbor Tool

Part Number	Upper Tool	Lower Tool
677430-1	432849-1	433600-2 or 432130-2

For complete product information, order Catalog 82159

Products for Industrial & Commercial Applications
Dimensions are shown for reference purposes only.
Dimensions are in inches and millimeters unless otherwise specified. Values in brackets are metric equivalents.
Specifications subject to change.
Technical Support Center 1-800-522-6752 www.tycoelectronics.com

Product Facts

- **Excellent for power distribution**
- **To be used for board-to-board and board-to-bus bar applications**
- **Louvertac high current contact used in receptacle**
- **Receptacle fits onto standard DIP .300 x .100 footprint**
- **Press-fit receptacle needs simple "flat-rock" tooling to install**
- **Accommodates board thickness from .054 to .125**
- **Insulation body rated 105°C, 94V-0**
- **Blind mate capability (tolerance ± .125 in X and Y axes)**
- **Perpendicular board stacking**

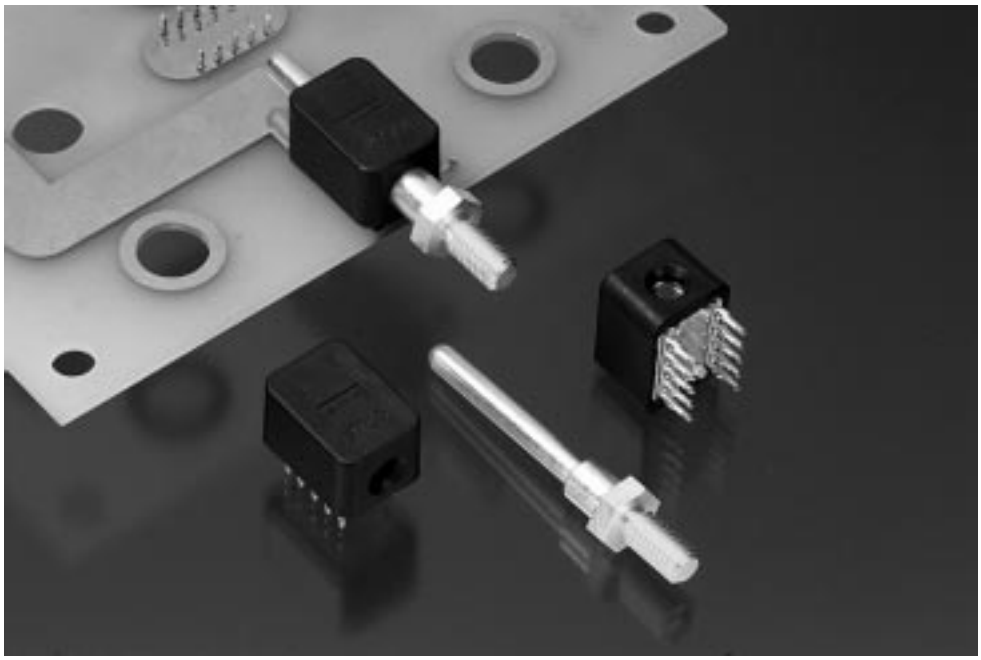

The AMP Right-Angle Power Tap connector provides a high current power distribution system, which gives reliable, consistent performance while allowing quick connect/disconnect of motherboard/daughtercard and bus bar/board combinations. Applications are found primarily in the networking and mass storage industries.

Designed with ACTION PIN contacts, each Right-Angle Power Tap connector has a 10 pin DIP footprint for convenient, industry standard mounting to .300 x .100 dimensions. A discrete pin and discrete socket are mounted on opposing halves (receptacles mounted on printed circuit boards, pins mounted on either printed circuit boards or bus bars) providing perpendicular board-to-board or board-to-bus bar mating. The Tap is insulated to provide shorting protection from other components and is easily inserted into the printed circuit board using simple, AMP Electric Servo Presses or customer supplied "flatrock" tooling.

Each Right-Angle Power Tap receptacle incorporates the highly reliable Louvertac contact for high current carrying capacity.

Technical Documents:

Application Specification
114-11000

For complete product information, order Catalog 82159

Receptacle Assembly

10 Position

Part Number 580132-1

Material:

Connector Body — Polyester, 105°C, 94V-0 rated

Contact — Phosphor bronze, silver plated

Related Product Data:

Mates With — Threaded Power Pin (below)

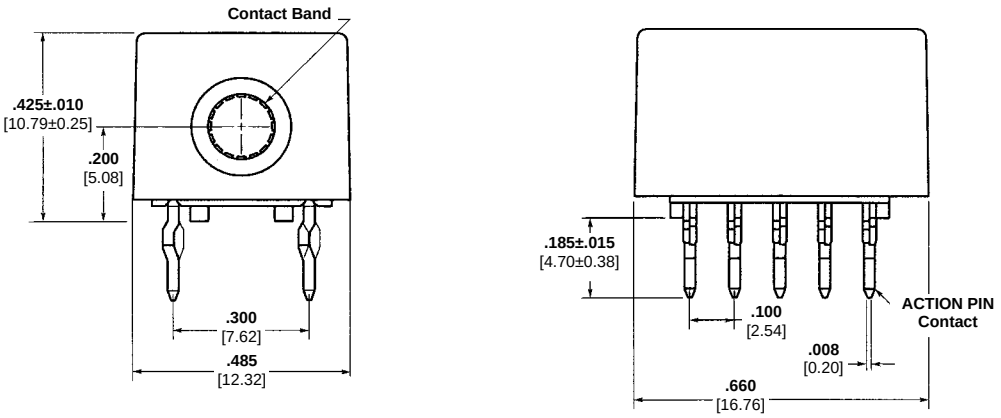

Threaded Power Pin

Part Number 580133-5

Material:

Brass, silver plated

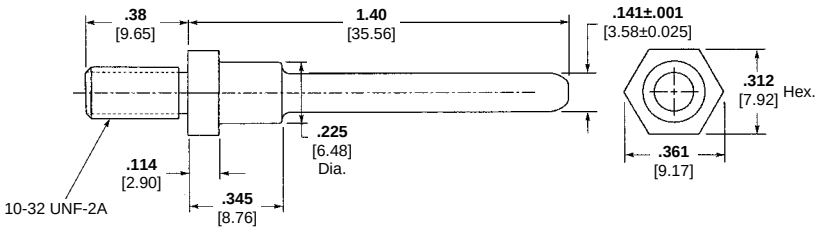

For complete product information, order Catalog 82159

Products for Industrial & Commercial Applications

Dimensions are shown for reference purposes only.

Dimensions are in inches and millimeters unless otherwise specified. Values in brackets are metric equivalents.

Specifications subject to change.

Technical Support Center
1-800-522-6752
www.tycoelectronics.com

Table of Contents

Micro-Strip Connectors (1.27 x 2.54 [.050 x .100] Centerline) 3002-3007
Vertical Plugs 3004-3005
Vertical and Right-Angle Receptacles 3006-3007

MICTOR Connectors (0.64 [.025] Centerline) 3008-3019
Vertical and Right-Angle Plugs 3011-3015
Vertical and Right-Angle Receptacles 3016-3018
Application Tooling 3019

Z-PACK 2mm HM Connectors 3020-3048
Connectors -- 5-Row and 8-Row Male and Female 3025-3037
Shrouds 3038
Coding Keys 3039
Universal Power Module 3040-3041
Guiding Hardware 3042-3043
Dimensions and Tolerances 3044-3045
Application Tooling 3046-3048

Z-PACK 2mm FutureBus+ Connectors 3049-3057
Signal Modules 3051-3054
Power Modules 3055-3056
Application Tooling 3057

Z-PACK Stripline 100 Connectors (2.54 x 2.54 [.100 x .100] Centerline) 3058-3067
Discretely Molded Pin and Receptacle Assemblies 3061-3062
Modular Pin and Receptacle Assemblies 3063-3065
Power and Keying Hardware and Applications.....3066
Application Tooling 3067

AMP-HDI (High Density Interconnect) Connectors.....3068-3077
Four-Row Pin and Receptacle Assemblies.....3069-3070
Three-Row Pin and Receptacle Assemblies 3071-3072
Two-Row Pin and Receptacle Assemblies 3073-3074
Hardware and Applications 3075-3076
Application Tooling 3077

TBC Plus (Twin-Beam Contact) Connectors 3078-3084
Modular Pin Header Assemblies 3079-3081
Modular Receptacle Assemblies.....3082
Guidance, Power and Keying Hardware Applications 3083-3084
Application Tooling 3079

Eurocard Connectors 3085-3110
Type C 3091-3094
Type C Enhanced (VME64X) 3095-3096
Type M 3097-3100
Type R 3101-3104
Shrouds for Type C and Type R 3105
Type F 3106-3108
Application Tooling 3109

Products for Industrial & Commercial Applications
Dimensions are shown for reference purposes only.
Dimensions are in inches and millimeters unless otherwise specified. Values in brackets are metric equivalents.
Specifications subject to change.
Technical Support Center
1-800-522-6752
www.tycoelectronics.com

Product Facts

- **Designed for high speed applications**
- **Provides controlled impedance**
- **Low inductance**
- **High density**
- **Superior electrical performance down to 250 picosecond rise times**
- **40 high speed signal lines per inch**
- **Daughtercard-to-motherboard stacking connectors available in sizes of 40 to 240 positions**
- **Custom stacking heights available: between 10.92 [.430] and 18.75 [.738] or 31.12 [1.225] and 38.94 [1.533]**
- **Cable-to-board system available in sizes of 40 to 120 positions**
- **Vertical and right-angle board mount receptacles for cable connectors**
- **Connector housings are polarized**
- **Board mount connectors are compatible with standard through-hole flow solder and vapor phase reflow solder processes**
- **Recognized under the Component Program of Underwriters Laboratories Inc., File No. E28476**
- **Certified by Canadian Standards Association, File No. LR 7189**



AMP Micro-Strip connectors are a high density, controlled impedance connector family compatible with the requirements of high density and high speed data transmission technologies.

Each signal line within the mated connector is located at a specific distance from an integral, separable bus bar serving as a ground plane in a micro-strip configuration. The selection of housing dielectric, spacing from signal contact-to-ground plane and conductor geometry provide a specific characteristic impedance plus very low inductance and capacitance.

Discontinuities resulting from connector structure and solder interfaces are dimensionally small and therefore appear transparent to high speed signals. Both vertical and right-angle board-to-board and cable-to-board connector versions share a nominal impedance of 50 ohms.

Each one inch length of connector houses two electrically isolated high current contacts. When soldered to the PC board ground plane, that ground plane is extended through the mated connector.

Resistance is minimized by a large contact area and short electrical length, providing signal return paths with negligible ground loop voltages. Since signal return is via the bus bars, signal-ground-signal alternation, common to high speed applications, becomes unnecessary. All contacts can be dedicated to signal transmission, effectively doubling connector density.

Vertical Board-to-Board Stacking Applications

Performance Characteristics:

Connector Impedance— 50 ohms ±10% at 1 ns

Configuration — 2.54 [.100] signal row-to-signal row, 1.27 [.050] signal-to-ground, 1.27 [.050] signal-to-signal

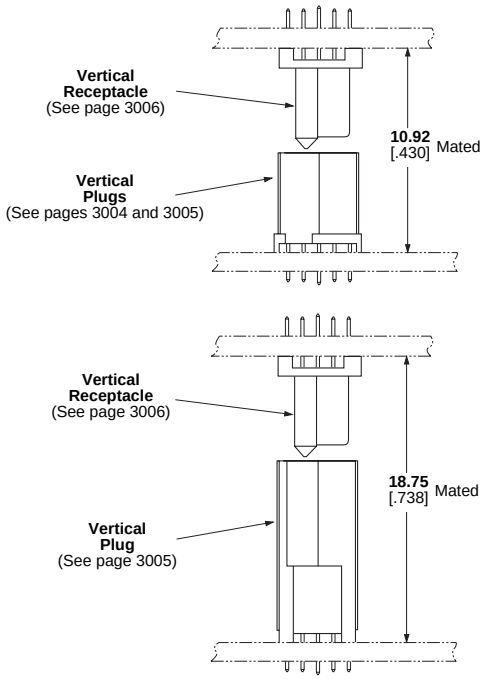

Right-Angle Board-to-Board Application

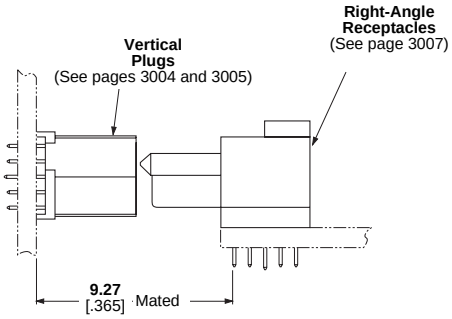

Vertical and Right-Angle Cable-to-Board Applications (Ref. AMP Catalog 65069, Micro-Strip Cable Assemblies)

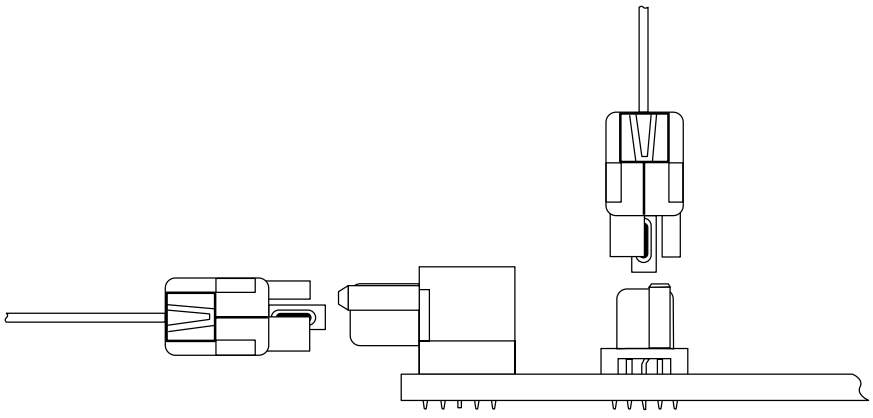

For complete product information, order Catalog 65194

Products for Industrial & Commercial Applications

Dimensions are shown for reference purposes only.

Dimensions are in inches and millimeters unless otherwise specified. Values in brackets are metric equivalents.

Specifications subject to change.

Technical Support Center
1-800-522-6752
www.tycoelectronics.com

Vertical Plugs (Board-to-Board)

10.92 [.430] Stacking Height

Material and Finish:

Housing — High-temperature thermoplastic, flame retardant, natural color

Bus Bar — Phosphor bronze; duplex plated 0.00076 [.000030] gold in mating area, 0.00254 [.000100] tin-lead in terminating area, with entire bus underplated 0.00127 [.000050] nickel

Signal Pin — Phosphor bronze; duplex plated 0.00076 [.000030] gold in mating area, 0.00254 [.000100] tin-lead in terminating area, with entire contact underplated 0.00127 [.000050] nickel

Related Product Data:

Performance Characteristics — page 3003

Mating Receptacles — pages 3006 and 3007

Technical Documents:

Product Specification
108-1272

Application Specification
114-11005

Electrical Performance Report
82833

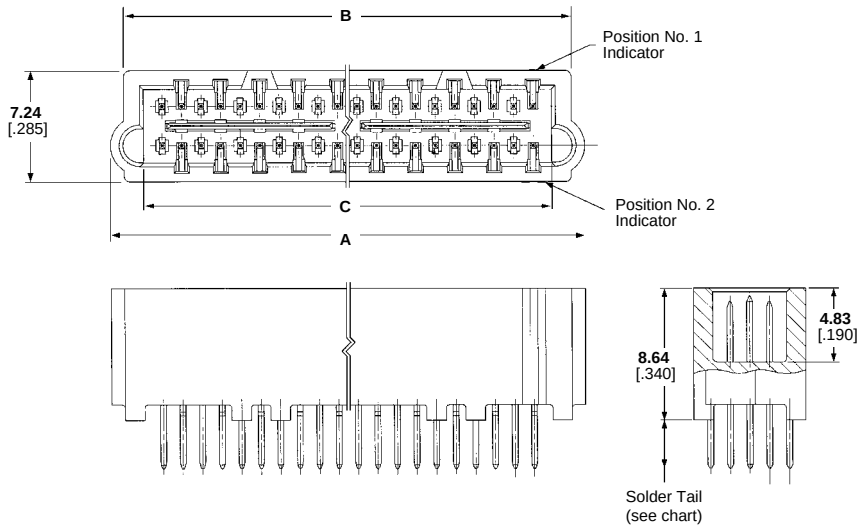

No. of Positions	Dimensions			Part Numbers		
	A	B	C	2.41 [.095] Solder Tail	3.18 [.125] Solder Tail	4.70 [.185] Solder Tail
40	**30.84** 1.214	**29.08** 1.145	**26.62** 1.048	536280-1	536272-1	536273-1
60	**43.54** 1.714	**41.78** 1.645	**39.32** 1.548	536280-2	536272-2	—
80	**56.24** 2.214	**54.48** 2.145	**52.02** 2.048	536280-3	536272-3	536273-3
100	**68.94** 2.714	**67.18** 2.645	**64.72** 2.548	536280-4	536272-4	536273-4
120	**81.64** 3.214	**79.88** 3.145	**77.42** 3.048	536280-5	536272-5	536273-5
140	**94.34** 3.714	**92.58** 3.645	**90.12** 3.548	536280-6	536272-6	—
160	**107.04** 4.214	**105.28** 4.145	**102.82** 4.048	536280-7	536272-7	—
180	**119.74** 4.714	**117.98** 4.645	**115.52** 4.548	536280-8	536272-8	—
200	**132.44** 5.214	**130.68** 5.145	**128.22** 5.048	536280-9	536272-9	—
220	**145.14** 5.714	**143.38** 5.645	**140.92** 5.548	1-536280-0	—	—
240	**157.84** 6.214	**156.08** 6.145	**153.62** 6.048	1-536280-1	—	—

Vertical Plugs (Board-to-Board)

18.75 [.738] Stacking Height

Material and Finish:

Housing — High-temperature thermoplastic, flame retardant, natural color

Bus Bar — Phosphor bronze; duplex plated 0.00076 [.000030] gold in mating area, 0.00254 [.000100] tin-lead in terminating area, with entire bus underplated 0.00127 [.000050] nickel

Signal Pin — Phosphor bronze; duplex plated 0.00076 [.000030] gold in mating area, 0.00254 [.000100] tin-lead in terminating area, with entire contact underplated 0.00127 [.000050] nickel

Related Product Data:

Performance Characteristics — page 3003

Mating Receptacles — pages 3006 and 3007

Technical Documents:

Product Specification
108-1272

Application Specification
114-11005

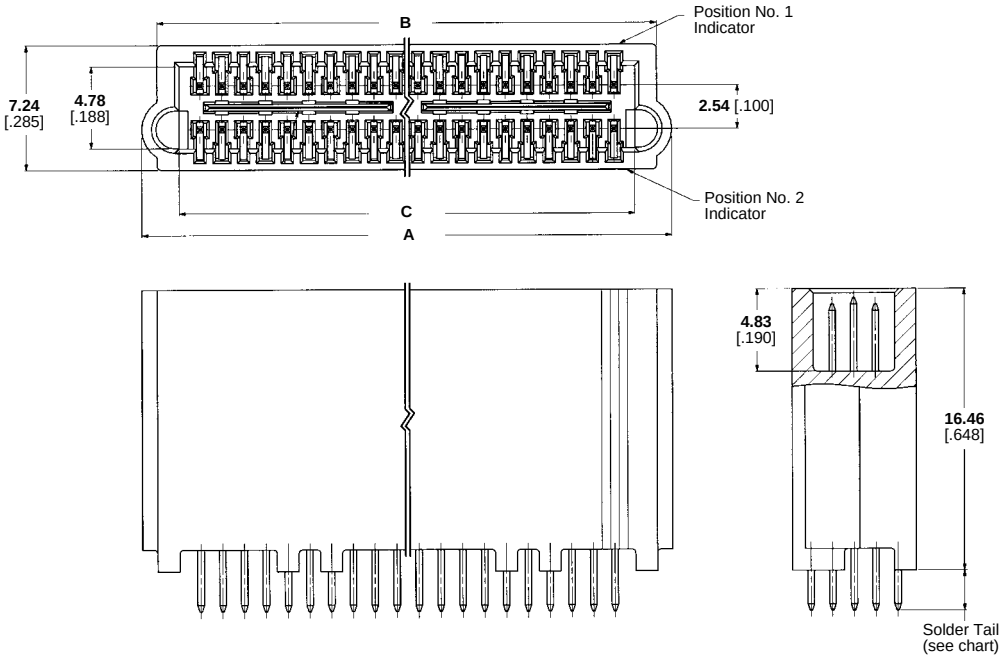

No. of Positions	Dimensions			Part Numbers		
	A	B	C	2.41 [.095] Solder Tail	3.18 [.125] Solder Tail	4.70 [.185] Solder Tail
40	**30.84** 1.214	**29.21** 1.150	**26.62** 1.048	149009-1	149011-1	149012-1
60	**43.54** 1.714	**41.91** 1.650	**39.32** 1.548	149009-2	149011-2	149012-2
80	**56.24** 2.214	**54.61** 2.150	**52.02** 2.048	149009-3	149011-3	149012-3
100	**68.94** 2.714	**67.31** 2.650	**64.72** 2.548	149009-4	149011-4	149012-4
120	**81.64** 3.214	**80.01** 3.150	**77.42** 3.048	149009-5	149011-5	149012-5
140	**94.34** 3.714	**92.71** 3.650	**90.12** 3.548	149009-6	149011-6	149012-6
160	**107.04** 4.214	**105.41** 4.150	**102.82** 4.048	149009-7	149011-7	149012-7
180	**119.74** 4.714	**118.11** 4.650	**115.52** 4.548	149009-8	149011-8	149012-8
200	**132.44** 5.214	**130.81** 5.150	**128.22** 5.048	149009-9	149011-9	149012-9

Vertical Receptacles (Board-to-Board)

Material and Finish:

Housing — High-temperature thermoplastic, flame retardant, natural color

Receptacle Bus — Phosphor bronze; duplex plated 0.00076 [.000030] gold in mating area, 0.00254 [.000100] tin-lead in terminating area, with entire bus underplated 0.00127 [.000050] nickel

Receptacle Contact — Phosphor bronze; duplex plated 0.00076 [.000030] gold in mating area, 0.00254 [.000100] tin-lead in terminating area, with entire contact underplated 0.00127 [.000050] nickel

Related Product Data:

Performance Characteristics — page 3003

Mating Plugs — pages 3004 and 3005

Technical Documents:

Product Specification
108-1272

Application Specification
114-11005

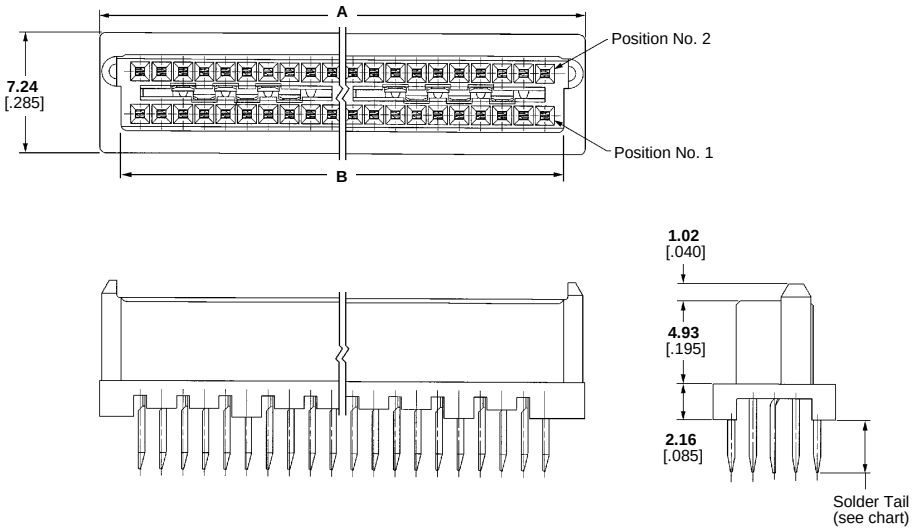

No. of Positions	Dimensions		Part Numbers		
	A	B	2.41 [.095] Solder Tail	3.18 [.125] Solder Tail	4.57 [.180] Solder Tail
40	**28.96** 1.140	**26.34** 1.037	536279-1	536254-1	536255-1
60	**41.66** 1.640	**39.01** 1.537	536279-2	536254-2	536255-2
80	**54.36** 2.140	**51.74** 2.037	536279-3	536254-3	536255-3
100	**67.06** 2.640	**64.44** 2.537	536279-4	536254-4	536255-4
120	**79.76** 3.140	**77.14** 3.037	536279-5	536254-5	536255-5
140	**92.48** 3.640	**89.84** 3.537	536279-6	536254-6	536255-6
160	**105.16** 4.140	**102.54** 4.037	536279-7	536254-7	536255-7
180	**117.86** 4.640	**115.24** 4.537	536279-8	536254-8	—
200	**130.56** 5.140	**127.94** 5.037	536279-9	536254-9	536255-9
220	**143.26** 5.640	**140.64** 5.537	1-536279-0	—	—
240	**155.96** 6.140	**153.34** 6.037	1-536279-1	—	—

Right-Angle Receptacles (Board-to-Board)

Material and Finish:

Housing — High-temperature thermoplastic, flame retardant, natural color

Receptacle Bus — Phosphor bronze; duplex plated 0.00076 [.000030] gold in mating area, 0.00254 [.000100] tin-lead in terminating area, with entire bus underplated 0.00127 [.000050] nickel

Receptacle Contact — Phosphor bronze; duplex plated 0.00076 [.000030] gold in mating area, 0.00254 [.000100] tin-lead in terminating area, with entire contact underplated 0.00127 [.000050] nickel

Related Product Data:

Performance Characteristics — page 3003

Mating Plugs — pages 3004 and 3005

Technical Documents:

Product Specification
108-1272

Application Specification
114-11005

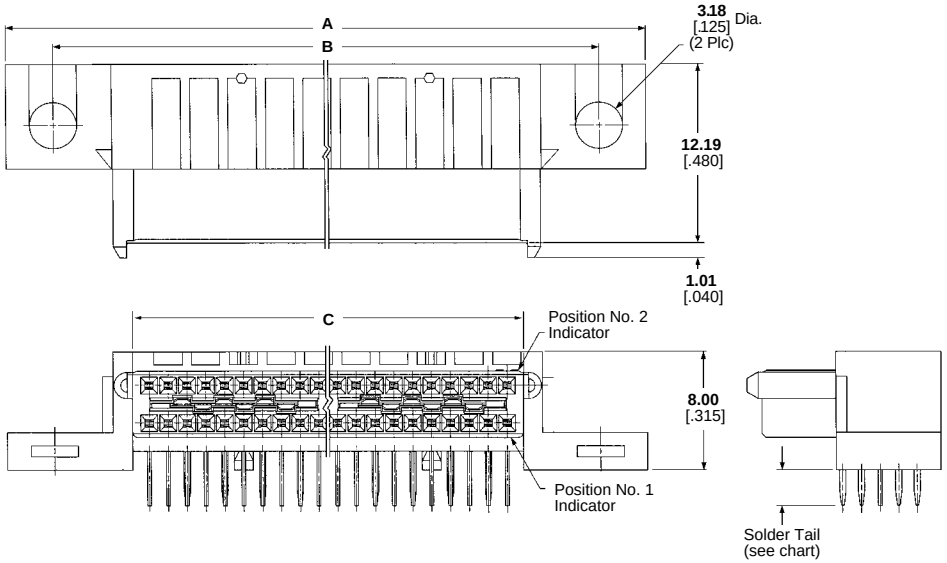

No. of Positions	Dimensions			Part Numbers		
	A	B	C	2.41 [.095] Solder Tail	3.18 [.125] Solder Tail	4.57 [.180] Solder Tail
40	**43.18** 1.700	**36.83** 1.450	**26.34** 1.037	536295-1	536297-1	536299-1
60	**55.88** 2.200	**49.53** 1.950	**39.04** 1.537	536295-2	536297-2	—
80	**68.58** 2.700	**62.23** 2.450	**51.74** 2.037	536295-3	536297-3	536299-3
100	**81.28** 3.200	**74.93** 2.950	**64.44** 2.537	536295-4	536297-4	—
120	**93.98** 3.700	**87.63** 3.450	**77.14** 3.037	536295-5	536297-5	—
140	**106.68** 4.200	**100.33** 3.950	**89.84** 3.537	—	536297-6	536299-6
160	**119.38** 4.700	**113.03** 4.450	**102.54** 4.037	536295-7	536297-7	—
180	**132.08** 5.200	**125.73** 4.950	**115.24** 4.537	—	536297-8	—
200	**144.78** 5.700	**138.43** 5.450	**127.94** 5.037	536295-9	536297-9	—

Product Facts

- **76 dedicated signal lines per linear inch**
- **Surface mount family designed for parallel and right-angle board-to-board, flex-to-board and cable-to-board configurations**
- **0.64 [.025] centerline contact spacing**
- **Provides 8 levels of mezzanine stacking from 6.60 [.260] to 21.59 [.850]**
- **Redundant interfaces on mated contacts**
- **Infrared and forced air convection compatible housing materials**
- **Designed for 50-ohm systems**
- **Connector housings polarized for correct mating**
- **Built-in connector-to-board retention feature**
- **Various packaging styles can be made available for automated assembly. Consult Tyco Electronics for details**
- **Recognized under the Component Program of Underwriters Laboratories Inc. File No. E28476**
- **CSA LR7189**



The MICTOR connector family is based on the microstrip concept of two rows of signal contacts divided by a center power ground plane. MICTOR connectors are motherboard and daughtercard compatible and include designs for cable-to-board applications.

Various mated heights are available for parallel board-to-board systems. The MICTOR connector family is available in 0.64 [.025] centerlines and in sizes ranging from 38 signal positions to 266 positions (in increments of 38 positions). There is a discrete ground bus every 12.7 [.50] of the connectror length, which can be assigned to either power or ground in any combination.

Redundant interfaces on every signal line provide added reliability. Two plating options are available to meet the needs of various applications.

The housing material is a liquid crystal polymer, compatible with infrared and forced air convection operations.

The connector system maintains a 50-ohm impedance and uses the solid ground bus between the rows of signals to provide low crosstalk and excellent high-speed signal characteristics.

For complete product information, order Catalog 65194

Products for Industrial & Commercial Applications

Dimensions are shown for reference purposes only.

Dimensions are in inches and millimeters unless otherwise specified. Values in brackets are metric equivalents.

Specifications subject to change.

Technical Support Center
1-800-522-6752
www.tycoelectronics.com

Material and Performance Specifications

Material Specifications

Material

Housing: Liquid crystal polymer, black

Contacts: Copper alloy

Ground Bus: Phosphor bronze

Finish (Gold Plating)

Contacts and Ground Bus: Duplex plated 0.00076 [.000030] min. gold in mating area, 0.00381 [.000150] min. tin-lead on leads, with entire contact and ground bus underplated 0.00178 [.000070] min. nickel

Finish (Palladium-Nickel Plating)

Contacts and Ground Bus: Duplex plated 0.000013 [.000005] min. gold over 0.00076 [.000030] min. palladium-nickel in mating area, 0.00381 [.000150] min. tin-lead on leads, with entire contact and ground bus underplated 0.00178 [.000070] min. nickel

Performance Specifications

Ratings

Voltage: 30 vac

Current: Signal; 1.0 ampere, fully derated*
Ground; 7.6 amperes, fully derated*

Temperature: -55°C to +125°C

*Consult Tyco Electronics for details on current rating.

Electrical Characteristics

Characteristic Impedance: 50±5 ohms at 1 ns

Termination Resistance: ΔR 10 milliohms max.; AMP Specification 109-6-1

Insulation Resistance: 10,000 megohms min.; AMP Specification 109-208-1

Dielectric Withstanding Voltage: 500 vac at sea level; AMP Specification 109-29-1

Mechanical Characteristics

Solderability: Solderable area shall have a 95% min. solder coverage; AMP Specification 109-11-1

Vibration (Random): No discontinuities of 1 µs or longer duration; AMP Specification 109-21-5

Physical Shock: No discontinuities of 1 µs or longer duration; AMP Specification 109-26-1

Durability (Tested to): Mate and unmate samples at a rate of 600 cycles max. per hour. 25 cycles, gold plating; 500 cycles, palladium-nickel plating; AMP Specification 109-27

Contact Retention: 1 lb min.; AMP Specification 109-30

Mating Force: 152 oz max. per 1/2 inch of connector (1 module). Each module equals 38 signal contacts and 1 ground bus; AMP Specification 109-42

Unmating Force: 19 oz min. per 1/2 inch of connector (1 module). Each module equals 38 signal contacts and 1 ground bus; AMP Specification 109-42

Environmental Characteristics

Thermal Shock: Subject mated samples to 5 cycles between -55°C and +125°C; AMP Specification 109-22

Humidity - Temperature Cycling: Subject mated samples to 10 cycles between +25°C and +65°C at 95% RH; AMP Specification 109-23-3, Condition B

Temperature Cycling: Subject mated samples to 1024 cycles between -40°C and +60°C at 2 hours per cycle; AMP Specification 109-75-1

Temperature Life: Subject mated samples to temperature life at +118°C for 792 hours; AMP Specification 109-43

Mixed Flowing Gas: Subject mated samples to environmental class II for 14 days; AMP Specification 109-85-2

For complete product information, order Catalog 65194

Products for Industrial & Commercial Applications
Dimensions are shown for reference purposes only.
Dimensions are in inches and millimeters unless otherwise specified. Values in brackets are metric equivalents.
Specifications subject to change.
Technical Support Center 1-800-522-6752 www.tycoelectronics.com

MICTOR Connectors Stacking Height Selection Guide (By Receptacle/Plug Combinations)

Plugs	Receptacles	
	Standard Height	Extended Height
6.60 [.260]	Page 3016 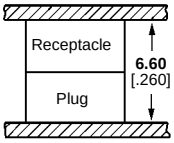 Page 3011	Page 3017 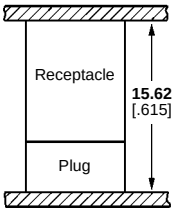 Page 3011
9.00 [.354]	Page 3016 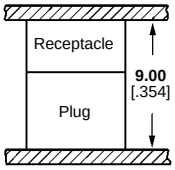 Page 3012	Page 3017 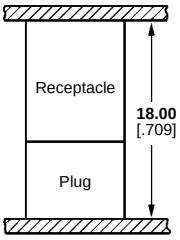 Page 3012
10.92 [.430]	Page 3016 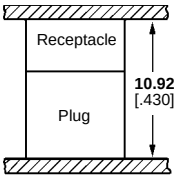 Page 3013	Page 3017 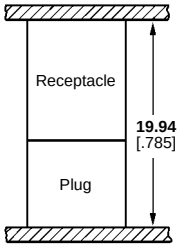 Page 3013
12.57 [.495]	Page 3016 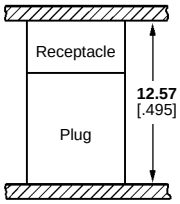 Page 3014	Page 3017 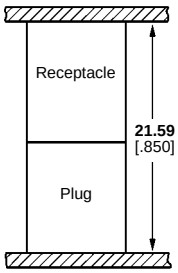 Page 3014

For complete product information, order Catalog 65194

Right angle versions are also available, see pages 3015 and 3018

Products for Industrial & Commercial Applications

Dimensions are shown for reference purposes only.

Dimensions are in inches and millimeters unless otherwise specified. Values in brackets are metric equivalents.

Specifications subject to change.

Technical Support Center
1-800-522-6752
www.tycoelectronics.com

Vertical Plugs

6.60 [.260] or 15.62 [.615] Stacking Height

Related Product Data:

Material and Finish — page 3009

Performance Characteristics — page 3009

Mating Receptacles — pages 3016 thru 3018. See stacking height selection guide — page 3010.

Technical Documents:

Product Specification
108-1422

Application Specification
114-11004

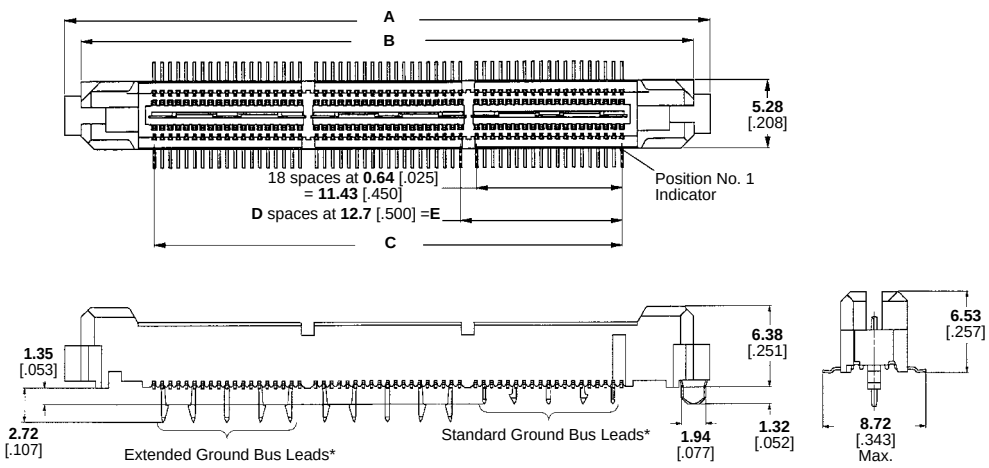

No. of Positions	Dimensions					Part Numbers	
	A	B	C	D	E	Standard Leads Gold Plating	Extended Leads Palladium-Nickel Plating
38	**25.40** 1.000	**22.81** .898	**11.43** .450	0	—	767007-8	767056-1
76	**38.10** 1.500	**35.51** 1.398	**24.13** .950	1	**12.70** .500	767007-9	767056-2
114	**50.80** 2.000	**48.21** 1.898	**36.83** 1.450	2	**25.40** 1.000	1-767007-0	767056-3
152	**63.50** 2.500	**60.91** 2.398	**49.53** 1.950	3	**38.10** 1.500	1-767007-1	767056-4
190	**76.20** 3.000	**73.61** 2.898	**62.23** 2.450	4	**50.80** 2.000	1-767007-2	767056-5
228	**88.90** 3.500	**86.31** 3.398	**74.93** 2.950	5	**63.50** 2.500	1-767007-3	767056-6
266	**101.60** 4.000	**99.01** 3.898	**87.63** 3.450	6	**76.20** 3.000	1-767007-4	767056-7

*One ground bus with 5 tails per each 38-position module.

Vertical Plugs

9.00 [.354] or 18.00 [.709] Stacking Height

Related Product Data:

Material and Finish — page 3009
Performance Characteristics — page 3009
Mating Receptacles — pages 3016 thru 3018. See stacking height selection guide — page 3010.

Technical Documents:

Product Specification
108-1422
Application Specification
114-11004

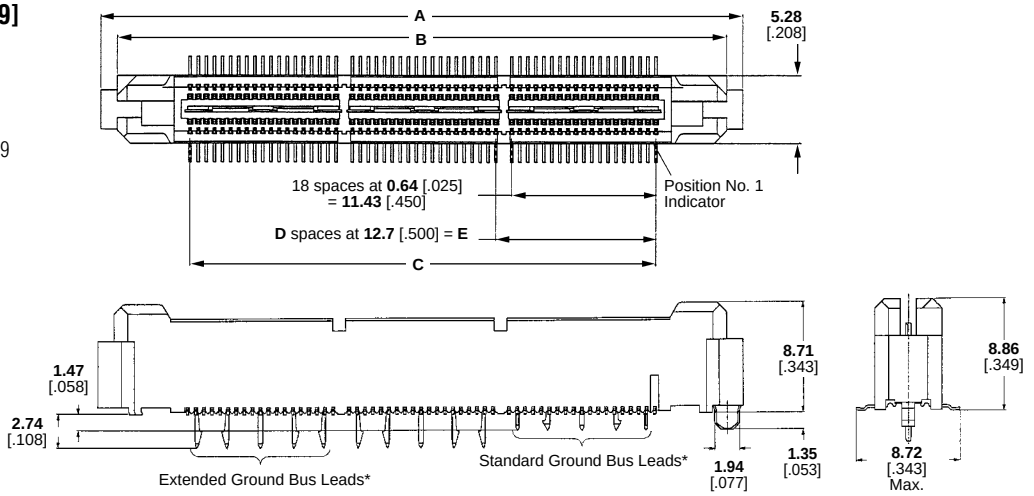

No. of Positions	Dimensions					Plug Part Numbers	
	A	B	C	D	E	Standard Leads Gold Plating	Extended Leads Palladium-Nickel Plating
38	**25.40** 1.000	**22.81** .898	**11.43** .450	0	—	767139-1	767140-1
76	**38.10** 1.500	**35.51** 1.398	**24.13** .950	1	**12.70** .500	767139-2	767140-2
114	**50.80** 2.000	**48.21** 1.898	**36.83** 1.450	2	**25.40** 1.000	767139-3	767140-3
152	**63.50** 2.500	**60.91** 2.398	**49.53** 1.950	3	**38.10** 1.500	767139-4	767140-4
190	**76.20** 3.000	**73.61** 2.898	**62.23** 2.450	4	**50.80** 2.000	767139-5	767140-5
228	**88.90** 3.500	**86.31** 3.398	**74.93** 2.950	5	**63.50** 2.500	767139-6	767140-6
266	**101.60** 4.000	**99.01** 3.898	**87.63** 3.450	6	**76.20** 3.000	767139-7	767140-7

*One ground bus with 5 tails per each 38-position module.

For complete product information, order Catalog 65194

Products for Industrial & Commercial Applications
Dimensions are shown for reference purposes only.
Dimensions are in inches and millimeters unless otherwise specified. Values in brackets are metric equivalents.
Specifications subject to change.
Technical Support Center
1-800-522-6752
www.tycoelectronics.com

Vertical Plugs

10.92 [.430] or 19.94 [.785] Stacking Height

Related Product Data:

Material and Finish — page 3009

Performance Characteristics — page 3009

Mating Receptacles — pages 3016 thru 3018. See stacking height selection guide — page 3010.

Technical Documents:

Product Specification
108-1422

Application Specification
114-11004

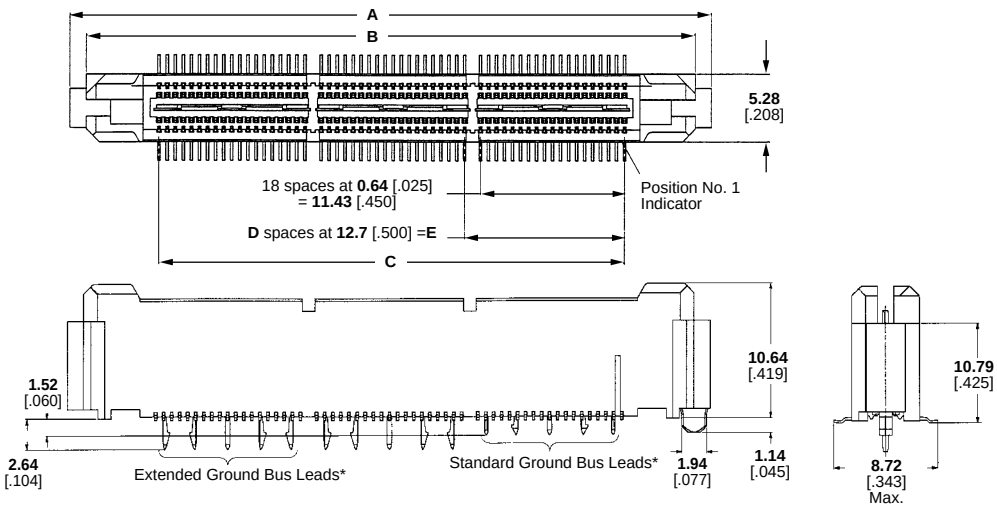

No. of Positions	Dimensions					Part Numbers	
	A	B	C	D	E	Standard Leads Gold Plating	Extended Leads Palladium-Nickel Plating
38	**25.40** 1.000	**22.81** .898	**11.43** .450	0	—	767003-9	767087-1
76	**38.10** 1.500	**35.51** 1.398	**24.13** .950	1	**12.70** .500	1-767003-0	767087-2
114	**50.80** 2.000	**48.21** 1.898	**36.83** 1.450	2	**25.40** 1.000	1-767003-1	767087-3
152	**63.50** 2.500	**60.91** 2.398	**49.53** 1.950	3	**38.10** 1.500	767003-8	767087-4
190	**76.20** 3.000	**73.61** 2.898	**62.23** 2.450	4	**50.80** 2.000	1-767003-2	767087-5
228	**88.90** 3.500	**86.31** 3.398	**74.93** 2.950	5	**63.50** 2.500	1-767003-3	767087-6
266	**101.60** 4.000	**99.01** 3.898	**87.63** 3.450	6	**76.20** 3.000	1-767003-4	767087-7

*One ground bus with 5 tails per each 38-position module.

For complete product information, order Catalog 65194

Products for Industrial & Commercial Applications
Dimensions are shown for reference purposes only.
Dimensions are in inches and millimeters unless otherwise specified. Values in brackets are metric equivalents.
Specifications subject to change.
Technical Support Center
1-800-522-6752
www.tycoelectronics.com

Vertical Plugs

12.57 [.495] or 21.59 [.850] Stacking Height

Related Product Data:

Material and Finish — page 3009

Performance Characteristics — page 3009

Mating Receptacles — pages 3016 thru 3018. See stacking height selection guide — page 3010.

Technical Documents:

Product Specification
108-1422

Application Specification
114-11004

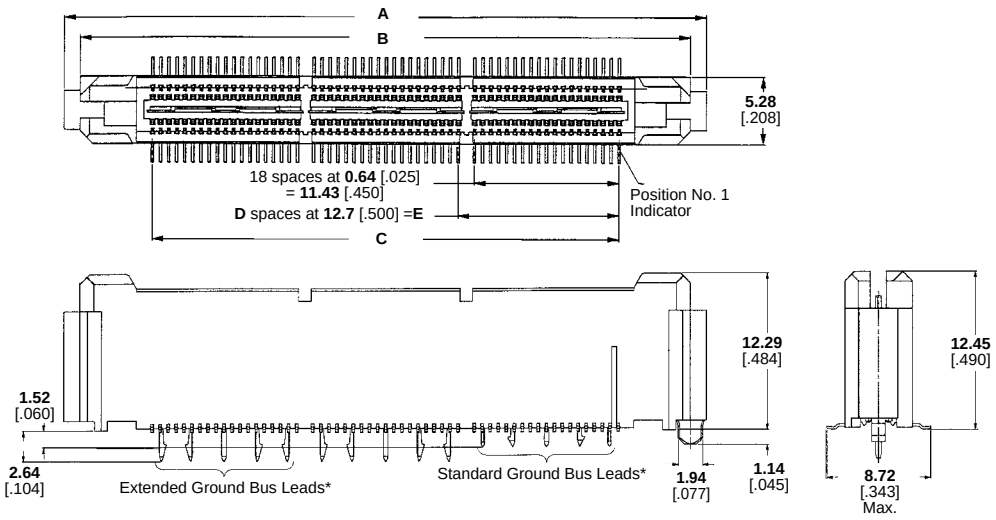

No. of Positions	Dimensions					Part Numbers	
	A	B	C	D	E	Standard Leads Gold Plating	Extended Leads Palladium-Nickel Plating
38	**25.40** 1.000	**22.81** .898	**11.43** .450	0	—	767005-8	767057-1
76	**38.10** 1.500	**35.51** 1.398	**24.13** .950	1	**12.70** .500	767005-9	767057-2
114	**50.80** 2.000	**48.21** 1.898	**36.83** 1.450	2	**25.40** 1.000	1-767005-0	767057-3
152	**63.50** 2.500	**60.91** 2.398	**49.53** 1.950	3	**38.10** 1.500	1-767005-1	767057-4
190	**76.20** 3.000	**73.61** 2.898	**62.23** 2.450	4	**50.80** 2.000	1-767005-2	767057-5
228	**88.90** 3.500	**86.31** 3.398	**74.93** 2.950	5	**63.50** 2.500	1-767005-3	767057-6
266	**101.60** 4.000	**99.01** 3.898	**87.63** 3.450	6	**76.20** 3.000	1-767005-4	767057-7

*One ground bus with 5 tails per each 38-position module.

Right-Angle Plugs

Related Product Data:

Material and Finish — page 3009
Performance Characteristics — page 3009
Mating Receptacles — pages 3016 thru 3018
Application Tooling — page 3019

Technical Documents:

Product Specification
108-1422
Application Specification
114-11004

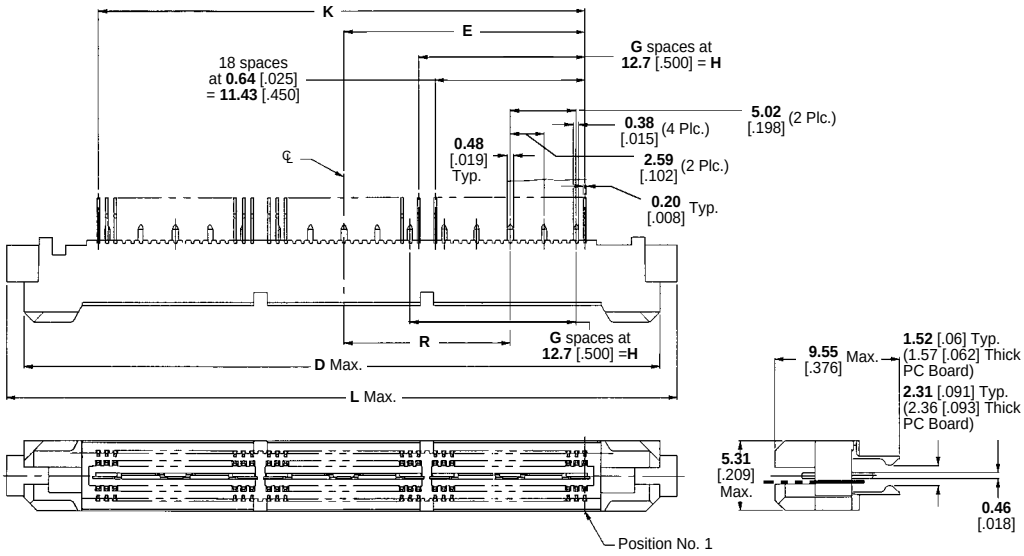

No. of Positions	Dimensions							Part Numbers		
								1.57 [.062] PC Boards		2.36 [.093] PC Boards
	D	E	G	H	K	L	R	Gold Plating	Palladium-Nickel Plating	Palladium-Nickel Plating
38	**22.81** .898	**5.72** .225	0	—	**11.43** .450	**25.55** .778	—	767006-1	767055-1	767039-1
76	**35.51** 1.398	**12.07** .475	1	**12.70** .500	**24.13** .950	**38.25** 1.278	**6.35** .250	767006-2	767055-2	767039-2
114	**48.21** 1.898	**18.42** .725	2	**25.40** 1.000	**36.83** 1.450	**50.95** 1.778	**12.70** .500	767006-3	767055-3	767039-3
152	**60.91** 2.398	**24.77** .975	3	**38.10** 1.500	**49.53** 1.950	**63.65** 2.278	**19.05** .750	767006-4	767055-4	767039-4
190	**73.61** 2.898	**31.12** 1.225	4	**50.80** 2.000	**62.23** 2.450	**76.35** 2.778	**25.40** 1.000	767006-5	767055-5	767039-5
228	**86.31** 3.398	**37.47** 1.475	5	**63.50** 2.500	**74.93** 2.950	**89.05** 3.278	**31.75** 1.250	767006-6	767055-6	767039-6
266	**99.01** 3.898	**43.82** 1.725	6	**76.20** 3.000	**87.63** 3.450	**101.75** 3.778	**38.10** 1.500	767006-7	767055-7	767039-7

Standard Height Vertical Receptacle

Related Product Data:

Material and Finish — page 3009
Performance Characteristics — page 3009
Mating Plug — pages 3011 thru 3015.
See stacking height selection guide — page 3010.

Technical Documents:

Product Specification
108-1422
Application Specification
114-11004

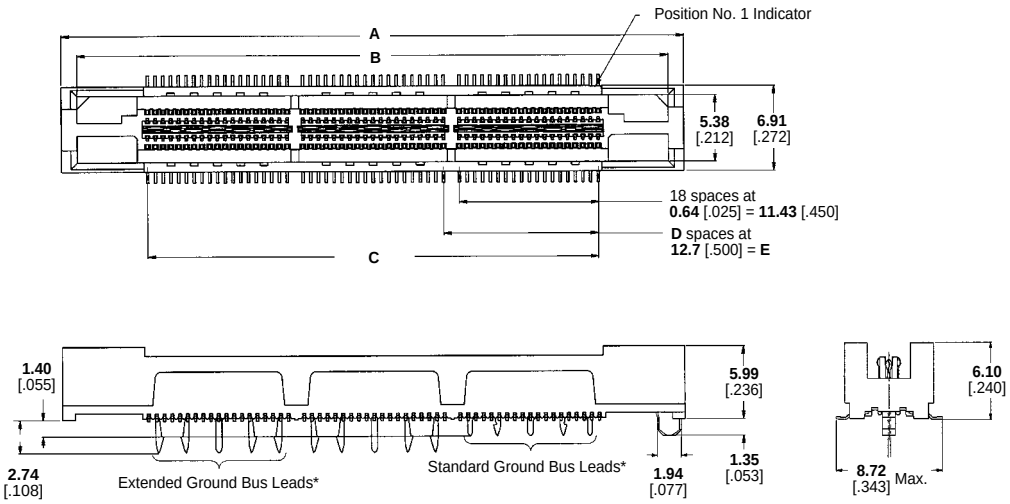

No. of Positions	Dimensions					Part Numbers	
	A	B	C	D	E	Standard Leads Gold Plating	Extended Leads Palladium-Nickel Plating
38	**25.40** 1.000	**22.86** .900	**11.43** .450	0	—	2-767004-2	767054-1
76	**38.10** 1.500	**35.56** 1.400	**24.13** .950	1	**12.70** .500	2-767004-3	767054-2
114	**50.80** 2.000	**48.26** 1.900	**36.83** 1.450	2	**25.40** 1.000	2-767004-4	767054-3
152	**63.50** 2.500	**60.96** 2.400	**49.53** 1.950	3	**38.10** 1.500	2-767004-5	767054-4
190	**76.20** 3.000	**73.66** 2.900	**62.23** 2.450	4	**50.80** 2.000	2-767004-6	767054-5
228	**88.90** 3.500	**86.36** 3.400	**74.93** 2.950	5	**63.50** 2.500	2-767004-7	767054-6
266	**101.60** 4.000	**99.06** 3.900	**87.63** 3.450	6	**76.20** 3.000	2-767004-8	767054-7

*One ground bus with 5 tails per each 38-position module.

For complete product information, order Catalog 65194

Products for Industrial & Commercial Applications

Dimensions are shown for reference purposes only.

Dimensions are in inches and millimeters unless otherwise specified. Values in brackets are metric equivalents.

Specifications subject to change.

Technical Support Center
1-800-522-6752
www.tycoelectronics.com

Extended Height Vertical Receptacle

Related Product Data:

Material and Finish — page 3009
Performance Characteristics — page 3009
Mating Plugs — pages 3011 thru 3015.
See stacking height selection guide — page 3010.

Technical Documents:

Product Specification
108-1422
Application Specification
114-11004

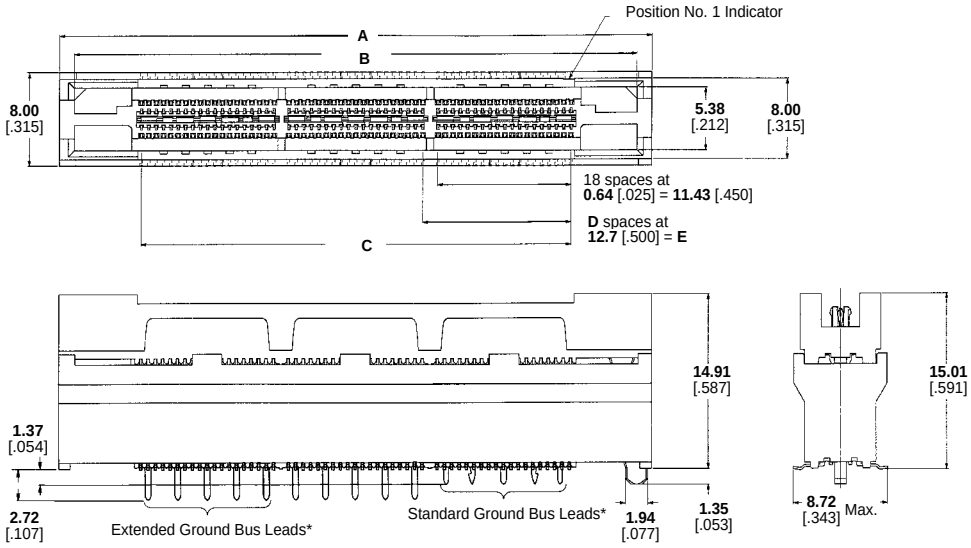

No. of Positions	Dimensions					Part Numbers	
	A	B	C	D	E	Standard Leads Palladium-Nickel Plating	Extended Leads Palladium-Nickel Plating
38	**25.40** 1.000	**22.86** .900	**11.43** .450	0	—	767094-1	767095-1
76	**38.10** 1.500	**35.56** 1.400	**24.13** .950	1	**12.70** .500	767094-2	767095-2
114	**50.80** 2.000	**48.26** 1.900	**36.83** 1.450	2	**25.40** 1.000	767094-3	767095-3
152	**63.50** 2.500	**60.96** 2.400	**49.53** 1.950	3	**38.10** 1.500	767094-4	767095-4
190	**76.20** 3.000	**73.66** 2.900	**62.23** 2.450	4	**50.80** 2.000	767094-5	767095-5
228	**88.90** 3.500	**86.36** 3.400	**74.93** 2.950	5	**63.50** 2.500	767094-6	767095-6
266	**101.60** 4.000	**99.06** 3.900	**87.63** 3.450	6	**76.20** 3.000	767094-7	767095-7

*One ground bus with 5 tails per each 38-position module.

For complete product information, order Catalog 65194

Products for Industrial & Commercial Applications
Dimensions are shown for reference purposes only.
Dimensions are in inches and millimeters unless otherwise specified. Values in brackets are metric equivalents.
Specifications subject to change.
Technical Support Center
1-800-522-6752
www.tycoelectronics.com

Right-Angle Receptacles

Related Product Data:

Material and Finish — page 3009
Performance Characteristics — page 3009
Mating Plugs — pages 3011 thru 3015
Application Tooling — page 3019

Technical Documents:

Product Specification
108-1422
Application Specification
114-11004

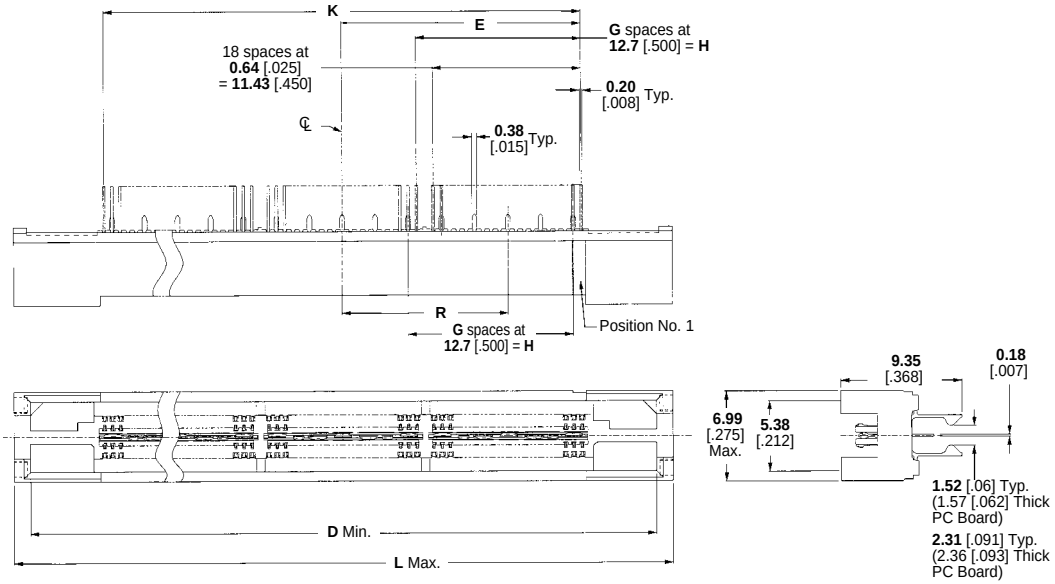

No. of Positions	Dimensions							Part Numbers (Palladium-Nickel Plating) PC Board Thickness	
	D	E	G	H	K	L	R	1.57 [.062]	2.36 [.093]
38	**22.86** .900	**5.72** .225	0	—	**11.43** .450	**25.48** 1.003	—	767044-1	767089-1
76	**35.56** 1.400	**12.06** .475	1	**12.70** .500	**24.13** .950	**38.18** 1.503	**6.35** .250	767044-2	767089-2
114	**48.26** 1.900	**18.42** .725	2	**25.40** 1.000	**36.83** 1.450	**50.88** 2.003	**12.70** .500	767044-3	767089-3
152	**60.96** 2.400	**24.76** .975	3	**38.10** 1.500	**49.53** 1.950	**63.58** 2.503	**19.05** .750	767044-4	767089-4
190	**73.66** 2.900	**31.12** 1.225	4	**50.80** 2.000	**62.23** 2.450	**76.28** 3.003	**25.40** 1.000	767044-5	767089-5
228	**86.36** 3.400	**37.46** 1.475	5	**63.50** 2.500	**74.93** 2.950	**88.98** 3.503	**31.75** 1.250	767044-6	767089-6
266	**99.06** 3.900	**43.82** 1.725	6	**76.20** 3.000	**87.63** 3.450	**101.69** 4.003	**38.10** 1.500	767044-7	767089-7

For complete product information, order Catalog 65194

Products for Industrial & Commercial Applications
Dimensions are shown for reference purposes only.
Dimensions are in inches and millimeters unless otherwise specified. Values in brackets are metric equivalents.
Specifications subject to change.
Technical Support Center
1-800-522-6752
www.tycoelectronics.com

Application Tooling for Right-Angle Connectors

Two operations must be performed so that MICTOR right-angle plug and receptacle connectors can be successfully installed on a PC board. First, the board must be slit for the ground/bus bar. At the customer's option, this operation may be done at the time of board manufacture. Second, the right-angle connector must be properly placed on the board.

We offer a bench-mount tooling for slitting the PC board (see below) and a free-standing tool for installing the connector (shown at the right). AMP Application Specification No. 114-11004 and Instruction Sheets are available to provide the necessary instructions and recommendations for proper tool use.

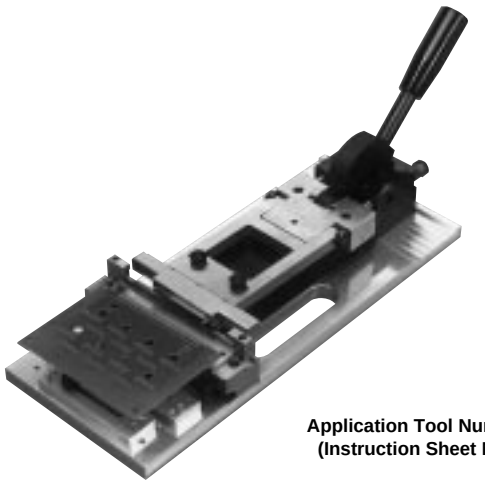

Application Tool Number 767511-1
(Instruction Sheet No. 408-4335)

Replacement Components for Tool Number 767511-1

Connector Size (No. of Positions)	Board Locator Pin		Plug Inserter	Receptacle Inserter	Support Pillar
	Round	Diamond			
38	767523-1	767526-1	767514-1	767570-1	767522-1
76	767523-1	767526-1	767514-2	767570-2	767522-1
114	767523-1	767526-1	767514-3	767570-3	767522-1
152	767523-1	767526-1	767514-4	767570-4	767522-1
190	767523-1	767526-1	767514-5	767570-5	767522-1
228	767523-1	767526-1	767514-6	767570-6	767522-1
266	767523-1	767526-1	767514-7	767570-7	767522-1



Slitting Tool Number 767527-1
(Instruction Sheet No. 408-4334)

Replacement Components for Tool Number 767527-1

Component Description	Quantity Required for Each Increment of 38 Positions (0.64 [.025] Centerline)	Part Numbers
Slitting Punch (Set of 35)	5	767532-1
Die Insert* (Set of 7)	1	767530-1

* The die insert is located in the tool with a 3.18 x 28.58 [.125 x 1.125] long dowel and held in place with a 6-32 UNC-2A x 7.94 mm [5/16"] long socket head cap screw (not included with replacement insert).

For complete product information, order Catalog 65194

Products for Industrial & Commercial Applications
Dimensions are shown for reference purposes only.
Dimensions are in inches and millimeters unless otherwise specified. Values in brackets are metric equivalents.
Specifications subject to change.
Technical Support Center 1-800-522-6752 www.tycoelectronics.com

System Options — Front

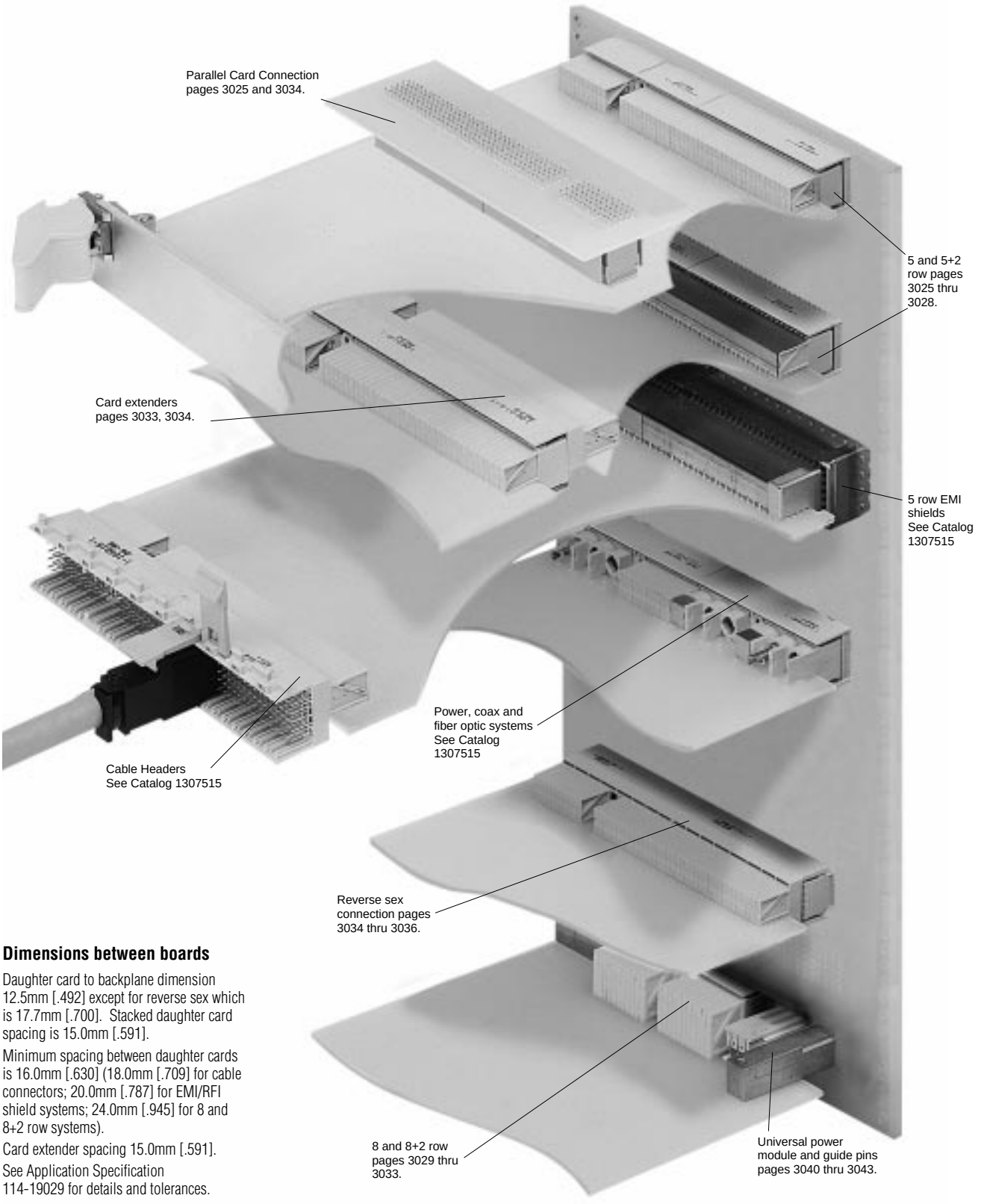

Dimensions between boards

Daughter card to backplane dimension 12.5mm [.492] except for reverse sex which is 17.7mm [.700]. Stacked daughter card spacing is 15.0mm [.591].

Minimum spacing between daughter cards is 16.0mm [.630] (18.0mm [.709] for cable connectors; 20.0mm [.787] for EMI/RFI shield systems; 24.0mm [.945] for 8 and 8+2 row systems).

Card extender spacing 15.0mm [.591].

See Application Specification 114-19029 for details and tolerances.

For complete product information, order Catalog 65911

Products for Industrial & Commercial Applications
Dimensions are shown for reference purposes only.
Dimensions are in inches and millimeters unless otherwise specified. Values in brackets are metric equivalents.
Specifications subject to change.
Technical Support Center 1-800-522-6752 www.tycoelectronics.com

System Options — Rear

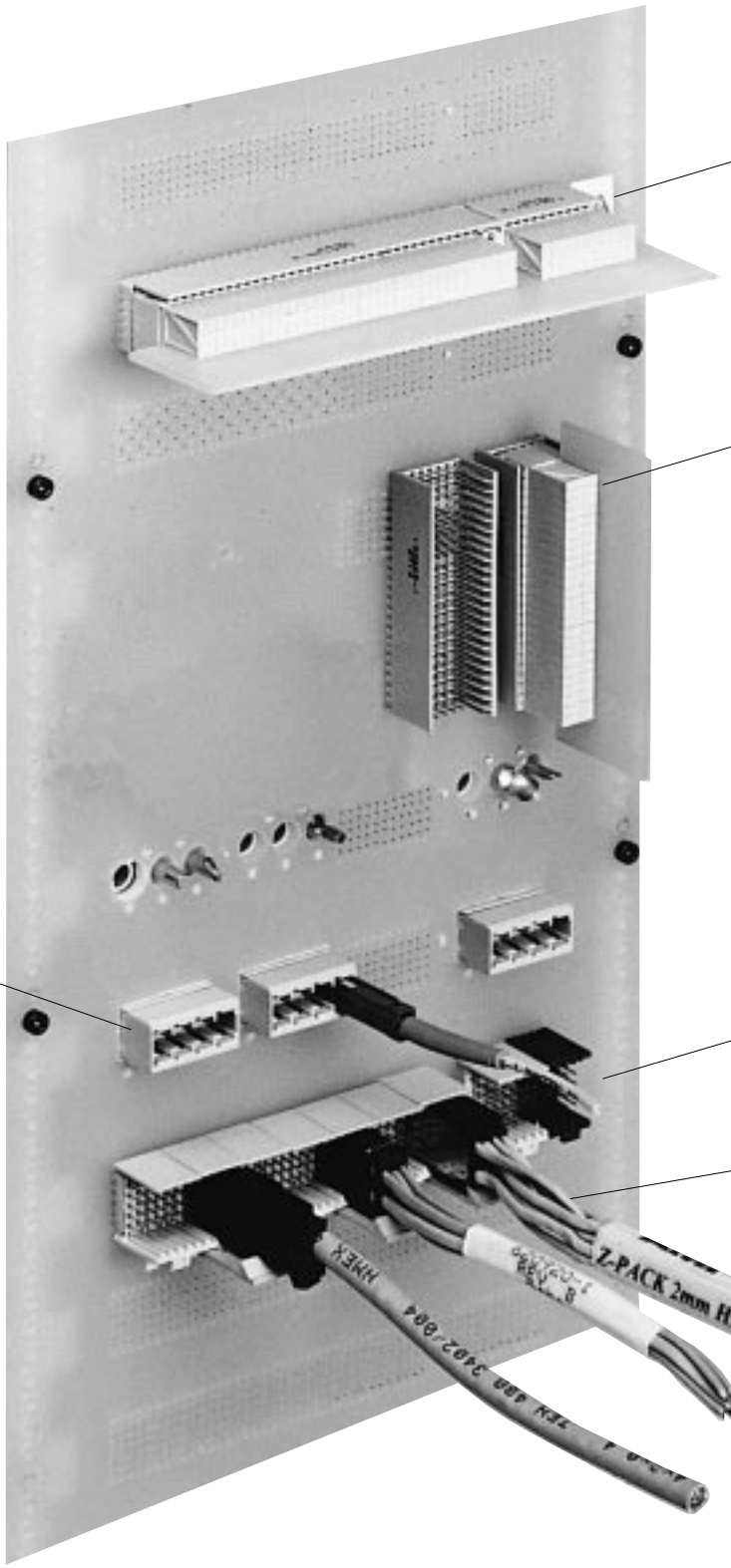

For complete product information, order Catalog 65911

Products for Industrial & Commercial Applications
Dimensions are shown for reference purposes only.
Dimensions are in inches and millimeters unless otherwise specified. Values in brackets are metric equivalents.
Specifications subject to change.
Technical Support Center
1-800-522-6752
www.tycoelectronics.com

Product Characteristics and System Features

PRODUCT CHARACTERISTICS

Electronic developments are increasing the demands on system performance, and connectors can no longer be considered as discrete components but as part of a total electrical/electronic design. These aspects can include the following:

Higher pin count within tight space constraints.

With 25 and 40 signal pins per cm of 5 row and 8 row connectors respectively, high densities can be achieved, or low signal to ground ratios specified within tight space constraints.

Minimum reflections

Matched impedance between cables, connectors and systems give low reflections at interfaces. This is achieved with overmolded receptacle contacts which give impedances close to the values of printed circuit boards, maximizing effective signal strength.

Reduced crosstalk

Crosstalk can be minimized by selective use of ground pins between signals, which can be augmented by the use of ground return shields. Reduced cross talk versions of the receptacle connector provide partial shielding between columns.

Shielding

Upper and/or lower ground return shields are used with 5+2 and 8+2 row headers to improve signal integrity. EMI / RFI shields are available to totally enclose 5 row connectors to give maximum exclusion from, and minimum emission of, radiated noise.

Reduced Skew

The design of right angle connectors achieves very low skew between longest and shortest contact and board paths, corrected for board effects. The actual value varies between 5 row and 8 row types.

Fiber Optic Connections

As well as the normal power and coaxial DIN contacts, either DIN fiber optic or AMP MSC fiber optic connectors can be included in backplane systems for high speed data transfer with minimum risk of corruption.

Upgradeability

The system is upgradeable to give enhanced performance as system demands increase. This allows economical selection of components initially with enhanced version selectable as performance levels increase without a major change in connector design or board layout. Tyco Electronics recommends that board layouts include ground return shield holes for future-proofing.

SYSTEM FEATURES

Termination

All versions use AMP ACTION PIN press fit contact termination, giving high retention force termination conforming to IEC 352-5.

Pin Headers

Contact pins are available to give three mating levels on the front face with standard 3.7mm [.146] tail, suitable for boards from 1.4 to 4.3mm [.055 - .169] thick. Feedthrough vertical headers offer three levels of mating to rear of backplane for midplane and cable connection with special twisted pins used for cross connect applications. A wide variety of standard product exists which offer economy and short lead times, but any variation of selective load can be offered.

Receptacle Assemblies

Receptacle assemblies employ a 'chiclet' assembly principle allowing a variety of selective loading and providing the ability to fit reduced cross talk shields. Enhanced versions are prefitted with upper shields, with lower shields applied separately as required.

Power Connection

Universal Power Module Connectors are press fit three position connectors with the option of three levels of sequencing and 23A rating.

Alternatively, DIN contacts can be used in type L ,M and N housings with contact rating up to 40A and first make/last break option. Variations of cable-to-board, board-to-board and cable-to-cable are offered.

Coaxial Connection

DIN coax contacts can be fitted to type L, M and N housings in cable and board mount versions.

Fiber Optic Connections

DIN style contacts can be fitted to housings as above or higher density AMP MSC contacts to MSC housings.

Spice Models

To achieve optimum performance and cost, it is essential to accurately match connector and system parameters. Where customers wish to carry out their own analysis, Tyco Electronics offers single and multi-line models for many connector styles. Please ask for details of the packages available.

Modeling Support

Tyco Electronics offers a structured approach to the design and evaluation of packaging and interconnection systems, including a full range of electrical and mechanical support functions.

Using accurate device models, our capabilities include high speed signal propagation analysis using SPICE modeling, and simulation of interconnections and backplane designs. Complete power distribution and thermal analysis can also be included.

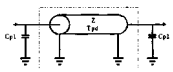

AMP Single Line and Multi Line Models, and Electrical Performance Reports are available for Z-PACK 2mm HM Connectors at www.amp.com/simulation, or by requesting CD#1307568.

Electrical Characteristics

Electrical Characteristics, Typical

AMP Z-PACK 2mm HM Connector System offers considerable benefits in performance over other 2mm [.079] systems. Tests have shown values for inductance, capacitive loading and propagation delay to be 18%, 13% and 18% lower respectively than other 5 row systems.

Shield Types and Selection Standard Version

5 row version gives 250 contacts/ 100mm [3.937], suitable for rise times down to 100ps with cross talk <5% using a 4:1 signal/ground ratio (50 signal/100mm)

Reduced Cross Talk Version

Metal shield grounded to row c and to the board (optional) reduces cross talk in the d and e contacts by 25% to the level of a and b. Allows increase in density to 100 signals/100mm [3.937].

Ground Return Shields

Performance is enhanced suitable for rise times down to 250ps by using extra pin rows mating to shields on the receptacle. Allows an increase in density to 75 signal/ 100mm [3.937], reduces cross talk by 30% and reduces single ended impedance peaks in rows a and e.

Ground Return and Reduced X-talk Shields

Increase performance to sub-nanosecond rise times. When used with differential pairs, improves cross talk by 30%, lowers impedance peaks and reduces propagation delay by 10%.

Electrical characteristics, Typical.

Signal Pin rating, all contacts loaded	1.5a @ 70°C [158°F]		
Nominal resistance	<13.5mOhm		
Creepage/clearance	</=0.8mm		
Propagation delay, corrected for board effects (5 row)	104ps		
Signal/ground ratio	4:1	1:1	Differential Pair
Impedance	50-58	49-55	86-89
Backward x-talk, row to row	4-10		2-3
" " column to column	<3	<1	<1
" " diagonal	<2	<<1	<<1
These values apply at 333ps rise time (10%-90%)			

These values have been obtained with 5 row connectors; similar improvements are obtained with 8 row versions

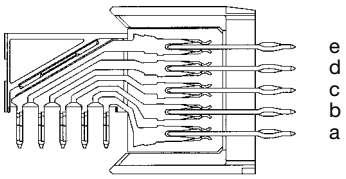

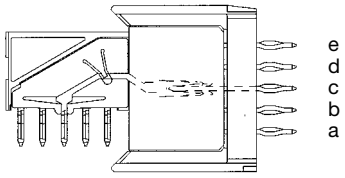

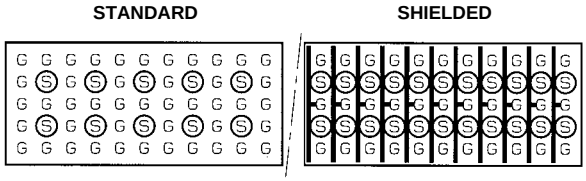

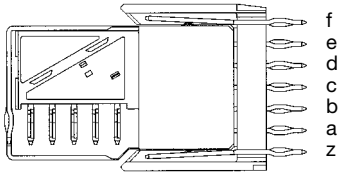

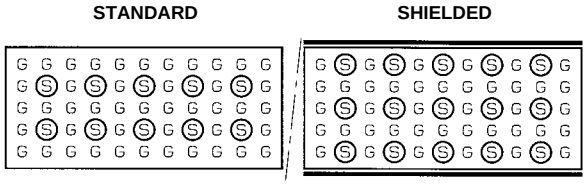

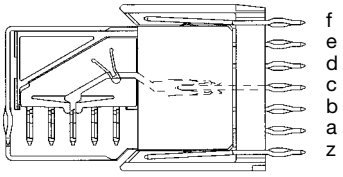

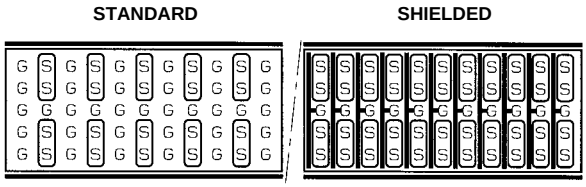

For complete product information, order Catalog 65911

Products for Industrial & Commercial Applications

Dimensions are shown for reference purposes only.

Dimensions are in inches and millimeters unless otherwise specified. Values in brackets are metric equivalents.

Specifications subject to change.

Technical Support Center
1-800-522-6752
www.tycoelectronics.com

Connector Configurations

Connector Stacking

Connectors can be stacked together without change of contact pitch so that the end features shown below nest together.

Guiding features are provided to align connector pairs and minimize contact damage. IEC 61076-4-101 dictates that connectors are end stacked as shown in the adjacent first five columns, with B modules located between modules with location/guiding features. This can be deviated from, but Tyco Electronics recommends that an alternative guiding device is used instead, such as the guide pin (page 3042) or static discharge guide pin (page 3043).

Types C and N are intended for use at a column end.

Universal Power Module connectors can be located at any position. Special arrangements must be made when stacking 8 row to 5 row.

The diagrams show typical arrangements but others are possible.

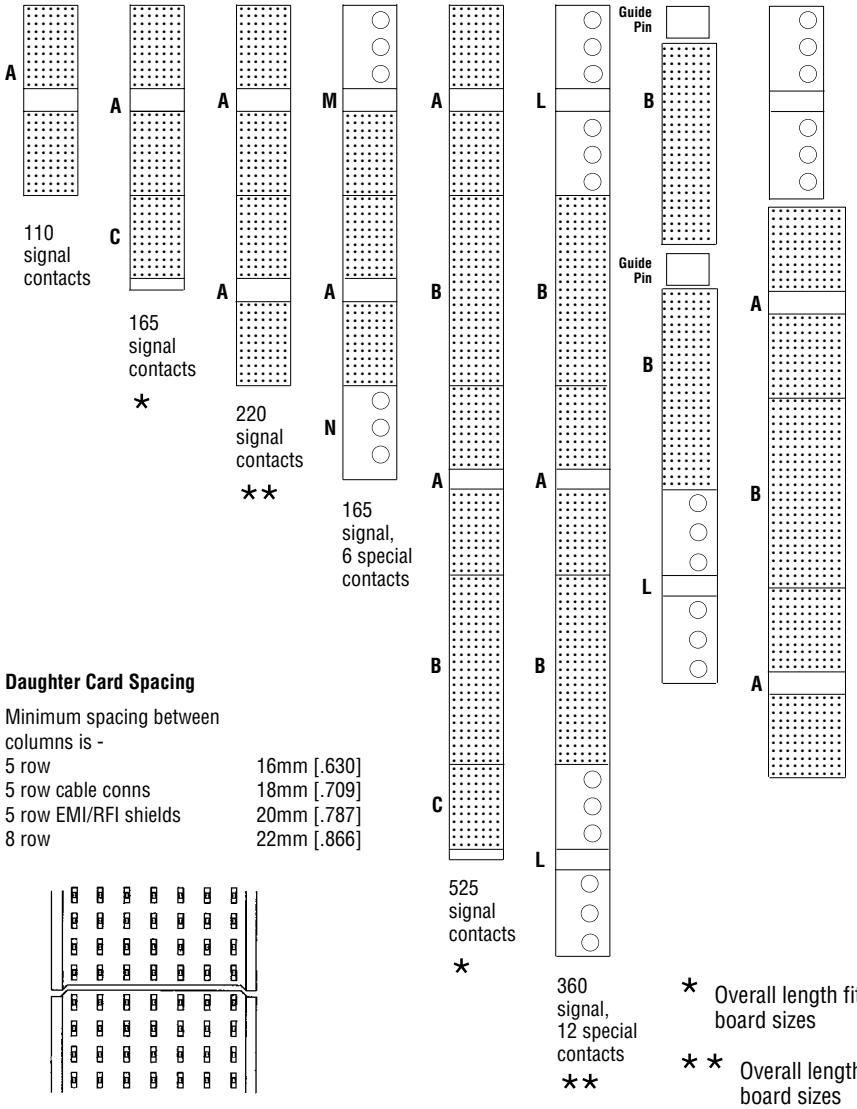

Daughter Card Spacing

Minimum spacing between columns is -

5 row	16mm [.630]
5 row cable conns	18mm [.709]
5 row EMI/RFI shields	20mm [.787]
8 row	22mm [.866]

ACTION PIN Contacts

Details of the pcb hole size and finish apply to all ACTION PIN contacts. IEC 61076-4-101 specifies true position of holes to within 0.1mm [.004].

For feedthrough posts, Tyco Electronics recommends true position within 0.05mm [.002] to minimize out-of-position post tips.

A new contact can be inserted into the same hole three times without damage should repair or replacement be necessary.

AMP ACTION PIN press-fit contact interconnection

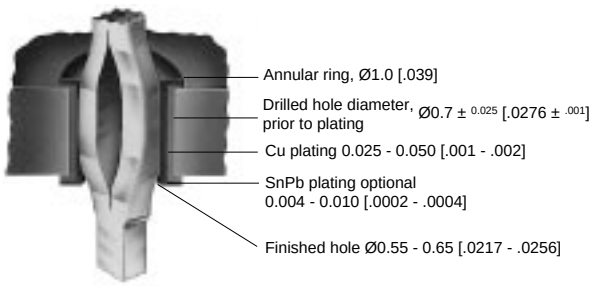

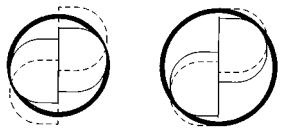

Min. hole ø 0.55 [.0217]

Max. hole ø 0.65 [.0256]

Two spring members compress to different degrees to accommodate hole tolerances

For complete product information, order Catalog 65911

Products for Industrial & Commercial Applications
Dimensions are shown for reference purposes only.
Dimensions are in inches and millimeters unless otherwise specified. Values in brackets are metric equivalents.
Specifications subject to change.
Technical Support Center 1-800-522-6752 www.tycoelectronics.com

Vertical Male Connector, 5 Row, Types A, B and C

Vertical Male Connectors

Types A,B and C male connectors will mate with right angle female and vertical female connectors shown on pages 3027 and 3036 respectively.

5 Row Versions

For use with unshielded females and with EMI/RFI shields.

Type A has 110 signal pins with center guiding and keying facility. Type B has 125 signal pins and Type C has 55 signal pins and guiding features. All are end stackable without change in contact pitch according to the chart on page 3024.

5+2 Row Versions

For use with females with ground return shields and contacts in rows z and f in addition to those above.

Short Tail Versions

Standard versions have contact option A in rows a-e with option C in rows z and f on 5+2 row versions.

Feedthrough Versions

For midplane and rear cable connection. 5 row versions mate with unshielded female connectors and 5 row cable connectors. 5+2 row versions mate with female connectors having ground return shields or 5+2 row shielded cable connectors. Standard versions use contact options K and T instead of A and C

MYLAR coated tail guides can be fitted to feedthrough posts to aid assembly to the board.

For versions other than those shown, refer to page 3039 which gives access to other sizes and loading patterns.

End caps are available for use with special versions of types A and B connectors. Consult Tyco Electronics.

Electrical Characteristics — page 3023.

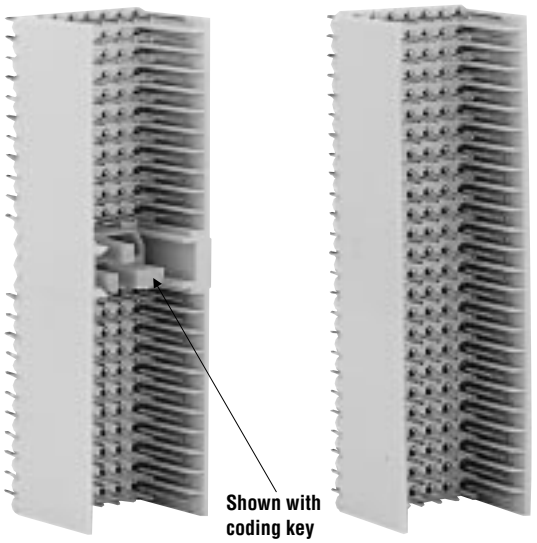

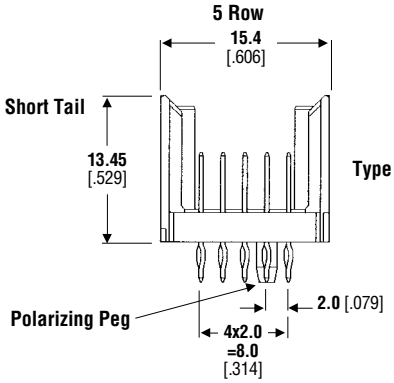

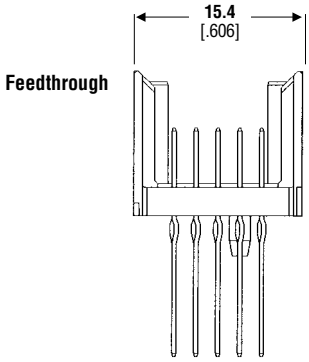

Type	Part Numbers			
	Short Tail		Feedthrough	
	5 Row	5+2 Row	5 Row	5+2 Row
Type A (with locating peg)	100143-1	100668-1	106164-1	106509-1
Type B	100141-1	100669-1	106165-1	106510-1
Type C	100159-1	106081-1	106303-1	188637-1

Material and Finish:

Glass filled polyester housing gray, UL94 V-0 rated Phosphor-bronze signal contacts Contact area 0.8µm Au over 1.3µm Ni ACTION PIN contact 0.5µm Sn/Pb over 1.3 µm Ni

Coding keys for type A page 3039.

Tooling — page 3046-3048.

For complete product information, order Catalog 65911

Products for Industrial & Commercial Applications
Dimensions are shown for reference purposes only.
Dimensions are in inches and millimeters unless otherwise specified. Values in brackets are metric equivalents.
Specifications subject to change.
Technical Support Center 1-800-522-6752 www.tycoelectronics.com

Vertical Male Connector, 5 Row, Types A, B and C

Short Tail Version Shown

Type A

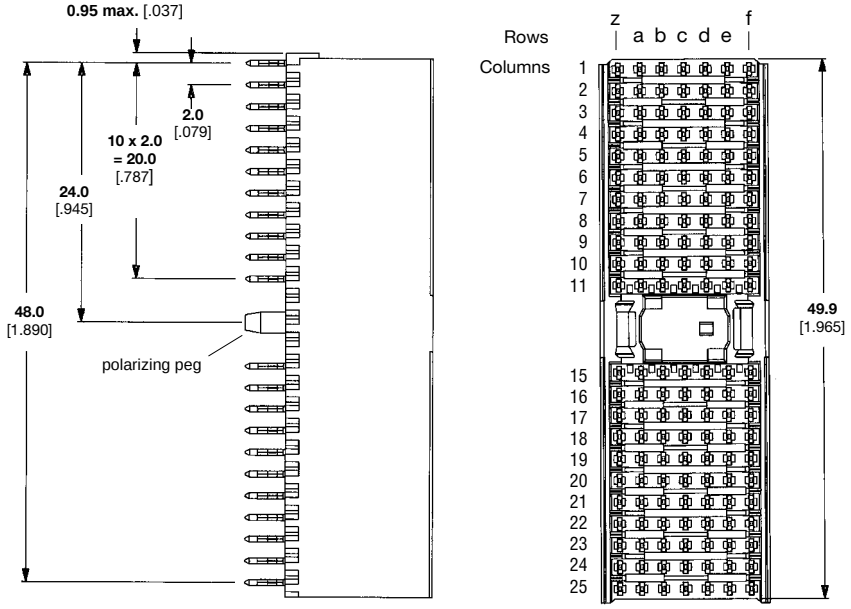

Type B

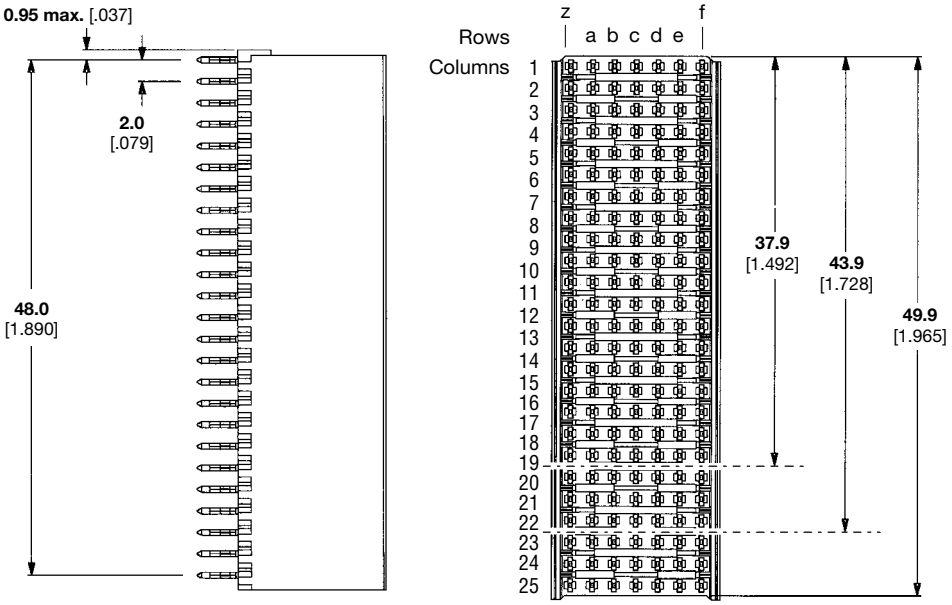

Type C

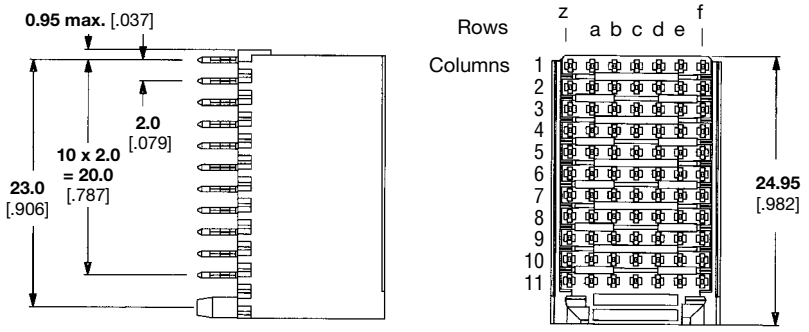

For complete product information, order Catalog 65911

Products for Industrial & Commercial Applications

Dimensions are shown for reference purposes only.

Dimensions are in inches and millimeters unless otherwise specified. Values in brackets are metric equivalents.

Specifications subject to change.

Technical Support Center
1-800-522-6752
www.tycoelectronics.com

Right Angle Female Connectors, 5 Row, Types A, B and C

Right Angle Female Connectors

Types A, B and C female connectors will mate with respective vertical and right angle male connectors and with shrouds shown on page 3025.

Type A has 110 contacts with center guiding and keying facility, Type B has 125 contacts and Type C has 55 contacts with end guiding feature. All are end stackable without change of contact pitch according to the chart on page 3024.

Four levels of performance are offered; standard, reduced crosstalk, ground return shield and reduced crosstalk + ground return shields. Upper ground return shields are pre-fitted to receptacles; lower shields are supplied and fitted separately as required. 5+2 male connectors are used with ground return shield versions.

For versions other than those shown, refer to page 3039 which gives access to other sizes and loading patterns.

Electrical Characteristics — page 3023.

Material and Finish:

Glass filled polyester housing, gray, UL94 V-0 rated.
Phosphor-bronze signal contacts
Contact area 0.8µm Au over 1.3µm Ni
ACTION PIN contact 0.5µm Sn/Pb over 1.3 µm Ni.

Coding keys for type A page 3039.

Daughtercard thickness range of 1.4 - 4.3mm [.055 - .169] (3.5mm [.138] max with lower shield).

Tooling — page 3046.

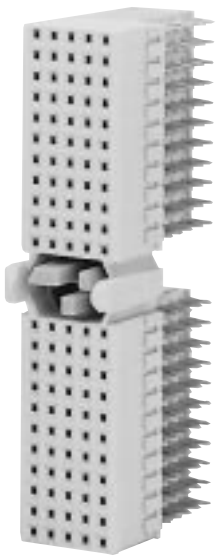

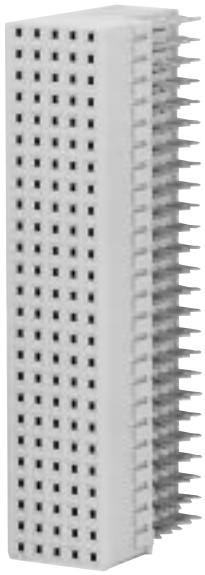

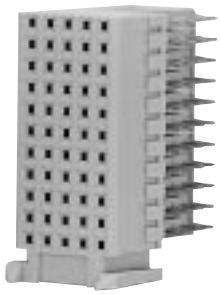

Standard Version

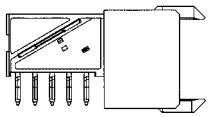

Reduced Crosstalk Version

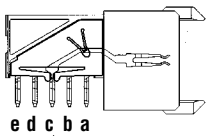

With Upper Shield Attached

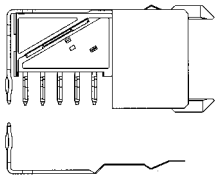

Lower Shields

Type A

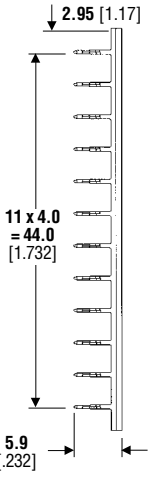

Type B

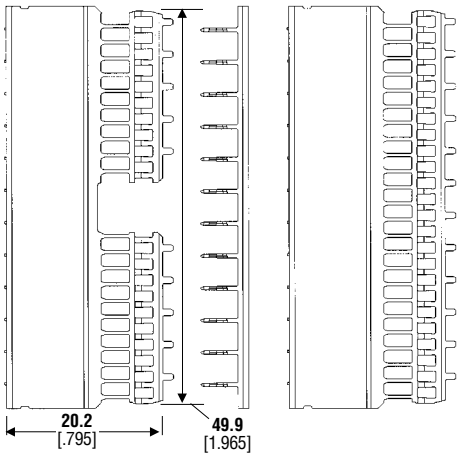

Type C

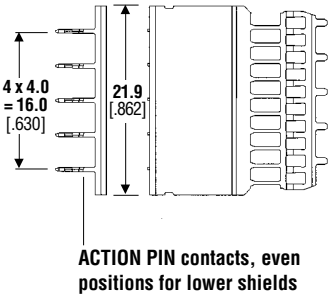

Type	Part Numbers				
	Standard	Standard with Upper Shield	Reduced Cross Talk	Reduced Cross Talk with Upper Shield	Lower Shield
Type A	100147-1	352068-1	100623-1	352344-1	338108-2
Type B	100145-1	352069-1	100624-1	352345-1	338110-2
Type B (22)	188836-1	352152-1	—	1345007-1	352468-2
Type B (19)	352009-1	352171-1	—	1345008-1	352029-2
Type C	100161-1	352115-1	188224-1	352346-1	352112-2

For complete product information, order Catalog 65911

Products for Industrial & Commercial Applications

Dimensions are shown for reference purposes only.

Dimensions are in inches and millimeters unless otherwise specified. Values in brackets are metric equivalents.

Specifications subject to change.

Technical Support Center
1-800-522-6752
www.tycoelectronics.com

Right Angle Female Connectors, 5 Row, Types A, B and C

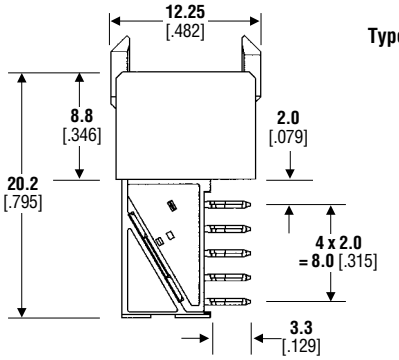

Type A

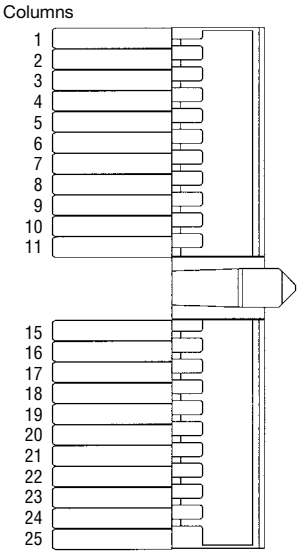

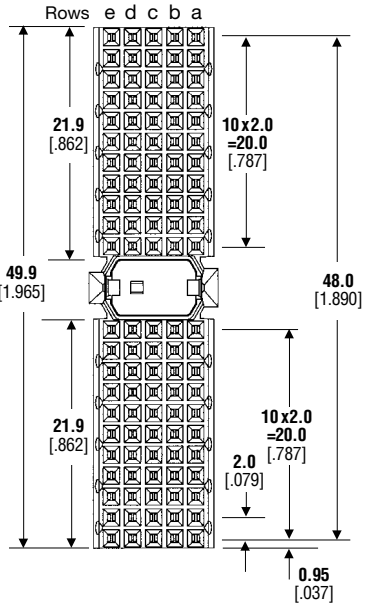

Type B

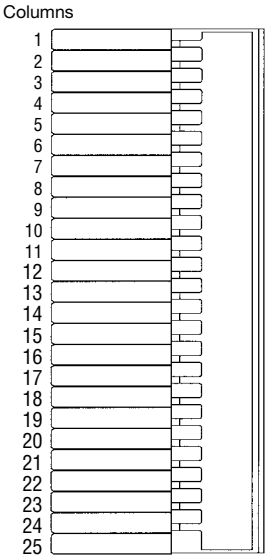

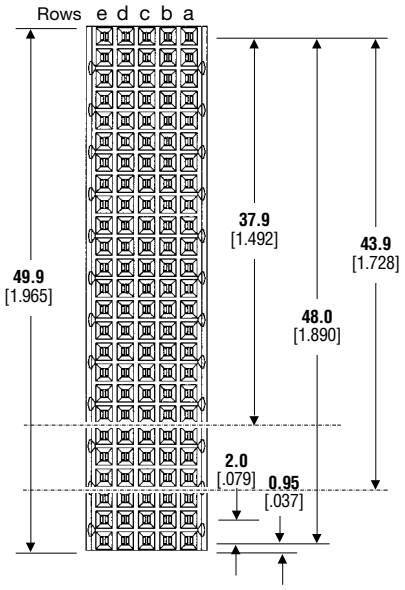

Type C

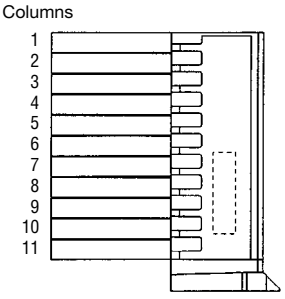

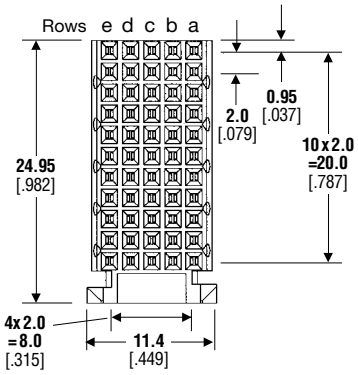

For complete product information, order Catalog 65911

Products for Industrial & Commercial Applications

Dimensions are shown for reference purposes only.

Dimensions are in inches and millimeters unless otherwise specified. Values in brackets are metric equivalents.

Specifications subject to change.

Technical Support Center
1-800-522-6752
www.tycoelectronics.com

Vertical Male Connectors, 8 Row, Types D, E and F

Vertical Male Connectors

Types D, E and F mate with respective right angle receptacle connectors shown on page 3031.

8 row Versions

For use with unshielded female connectors. Type D has 176 signal pins with center guiding and keying facility, and Type E has 200 signal pins and Type F has 88 signal pins. They are stackable without change of contact pitch according to the chart on page 3024.

8+2 Row Versions

For use with females with ground return shields and have contacts in rows z and i in addition to those above.

Short Tail Versions

Standard versions have contact option A in rows a-h with option C in rows z and i on 8+2 row versions.

Feedthrough Versions

For midplane connection, 8 row versions mate with standard 8 row female connectors and 8+2 row versions mate with female connectors having ground return shields. Standard versions use contact options K and T instead of A and C.

For versions other than those shown, refer to page 3039 which gives access to other sizes and loading patterns.

Guide pin Part Number 532808-1 may be used with Type D male connectors to give early alignment.

Electrical Characteristics — page 3023.

Material and Finish:

Glass filled polyester housing, gray, UL94 V-0 rated
Phosphor-bronze signal contacts
Contact area 0.8µm Au over 1.3µm Ni
ACTION PIN contact 0.5µm Sn/Pb over 1.3 µm Ni.

Coding keys for type D page 3039.

Tooling — page 3046.



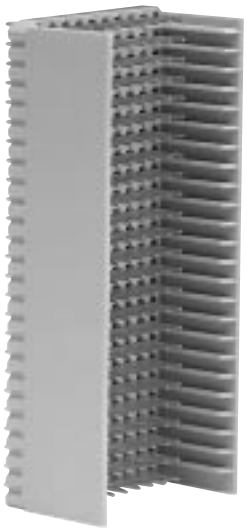



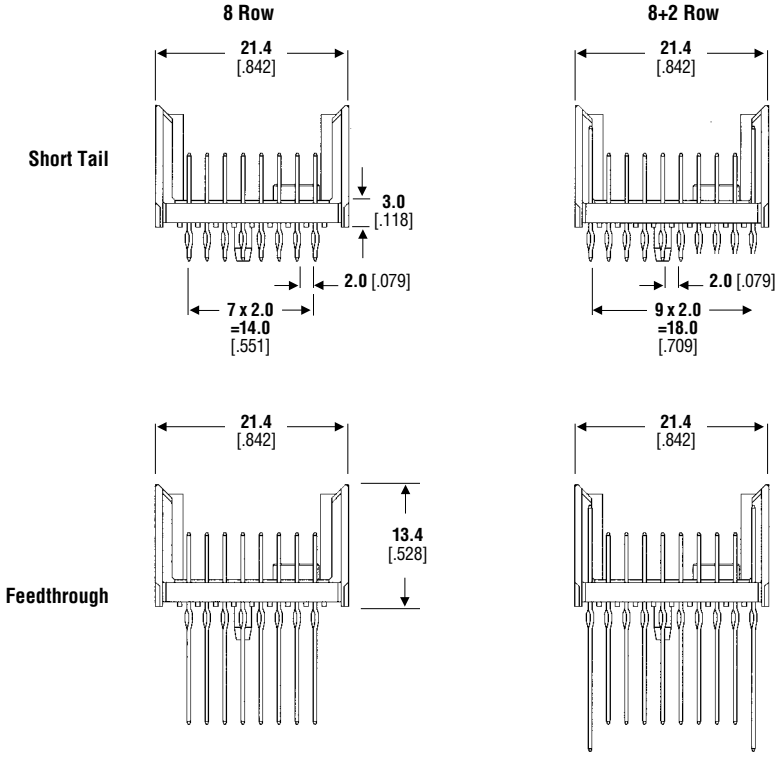

Type	Part Numbers			
	Short Tail		Feedthrough	
	8 Row	8+2 Row	8 Row	8+2 Row
Type D	646346-1	646356-1	646372-1	646375-1
Type D (16 column, 128 position)	646362-1	—	—	—
Type E	646347-1	646357-1	646373-1	646376-1
Type F	646457-1	646513-1	646514-1	646515-1

For complete product information, order Catalog 65911

Products for Industrial & Commercial Applications
Dimensions are shown for reference purposes only.
Dimensions are in inches and millimeters unless otherwise specified. Values in brackets are metric equivalents.
Specifications subject to change.
Technical Support Center 1-800-522-6752 www.tycoelectronics.com

Vertical Male Connectors, 8 Row, Types D, E and F

Short Tail Versions Shown

Type D

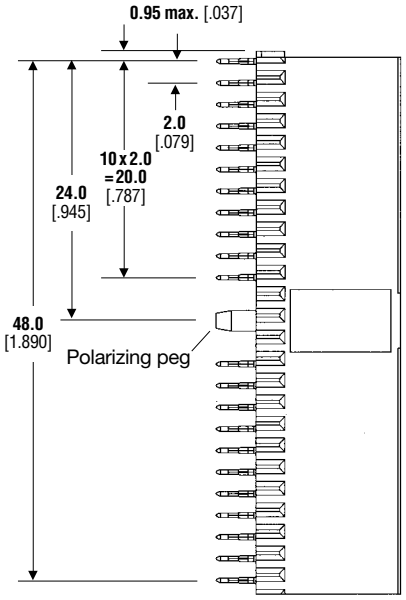

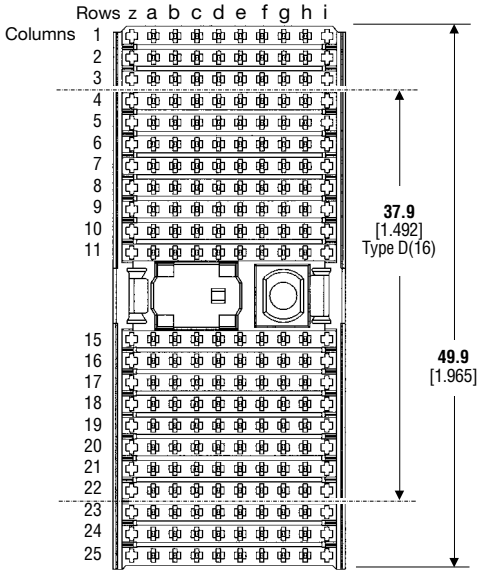

Type E

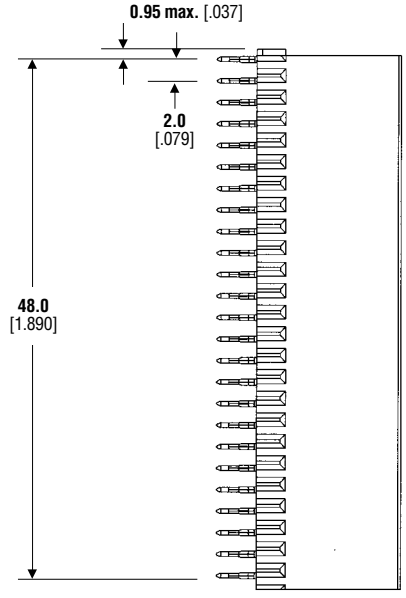

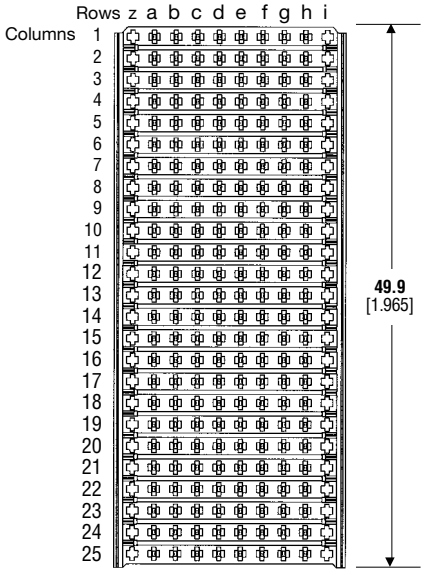

Type F

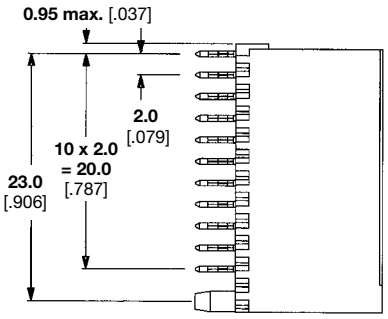

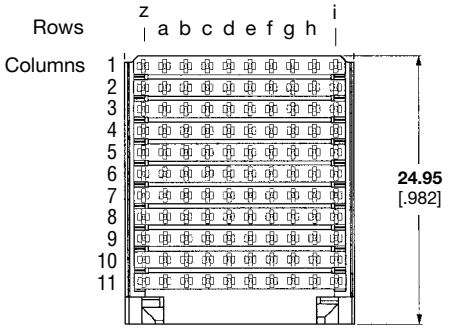

For complete product information, order Catalog 65911

Products for Industrial & Commercial Applications

Dimensions are shown for reference purposes only.

Dimensions are in inches and millimeters unless otherwise specified. Values in brackets are metric equivalents.

Specifications subject to change.

Technical Support Center
1-800-522-6752
www.tycoelectronics.com

Right Angle Female Connectors, 8 Row, Types D, E and F

Right Angle Female Connectors

Types D, E and F female connectors will mate with respective vertical male connectors shown on page 3029.

Type D has 176 contacts with center guiding and keying facility and Type E has 200 contacts and Type F has 88 contacts. Connectors are end stackable without change of contact pitch according to the chart on page 3024. Two levels of performance are offered; standard and ground return shield versions. Upper ground return shields are pre-fitted to receptacles; lower shields are supplied and fitted separately as required. 8+2 male connectors are used with ground return shield versions.

For versions other than those shown, which gives access to other sizes and loading patterns, consult Tyco Electronics.

Electrical Characteristics — page 3023.

Materials and Finish:

Glass filled polyester + LCP housing, gray, UL94 V-0 rated
Phosphor-bronze signal contacts
Contact area 0.8µm Au over 1.3µm Ni
ACTION PIN contact 0.5µm Sn/Pb over 1.3 µm Ni

Coding Keys for Type A page 3039.

Daughtercard thickness range of 1.4 - 4.3mm [.055 - .169] (3.5mm [.138] max. with lower shield)

Tooling — page 3046.

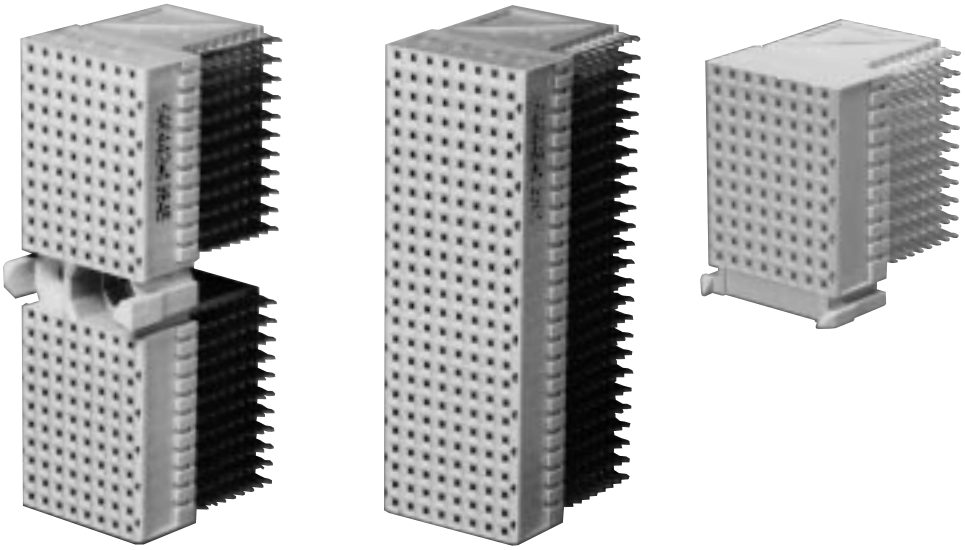

Standard

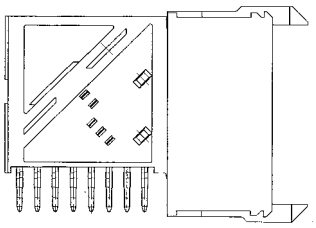

With Shields

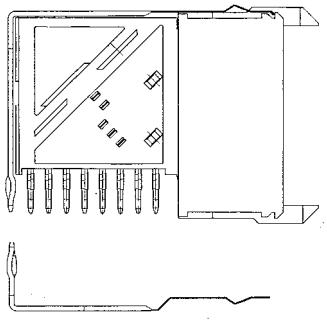

Shields

Type D

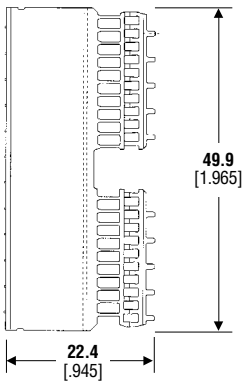

Type E

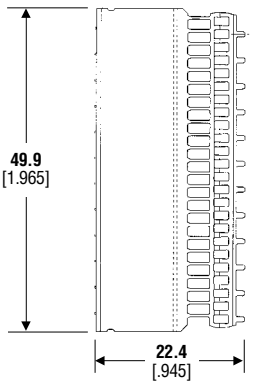

Type F

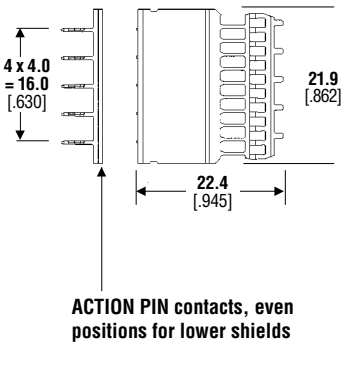

Type	Part Numbers		
	Standard	Standard with Upper Shield	Lower Shield
Type D	646442-1	646486-1	646428-1
Type D (16)	646447-1	—	—
Type E	646445-1	646487-1	646430-1
Type F	646446-1	646492-1	646493-1

For complete product information, order Catalog 65911

Products for Industrial & Commercial Applications
Dimensions are shown for reference purposes only.
Dimensions are in inches and millimeters unless otherwise specified. Values in brackets are metric equivalents.
Specifications subject to change.
Technical Support Center
1-800-522-6752
www.tycoelectronics.com

Right Angle Female Connectors, 8 Row, Types D, E and F

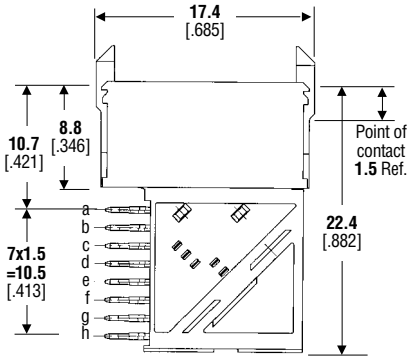

Type D

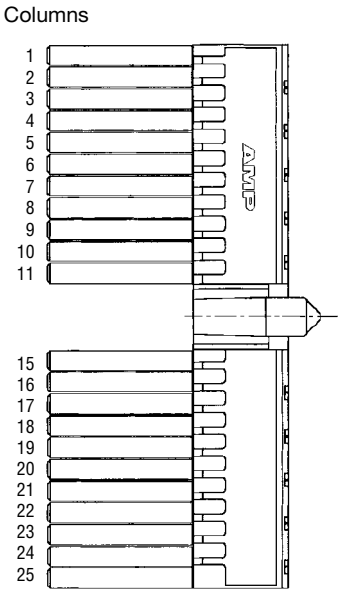

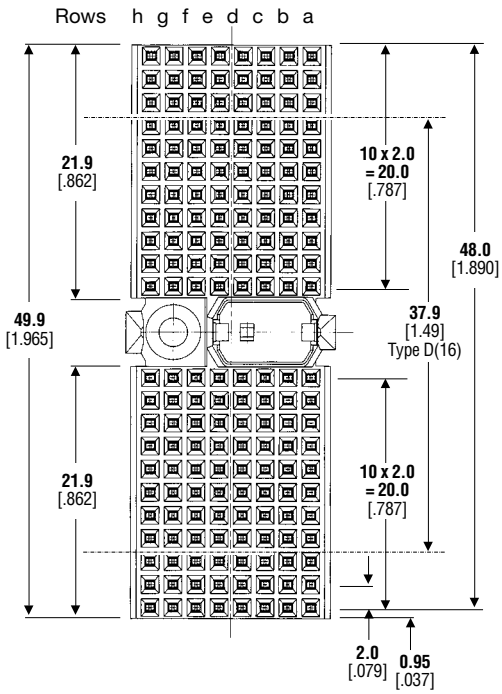

Type E

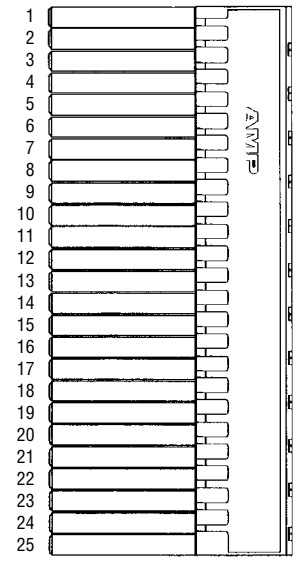

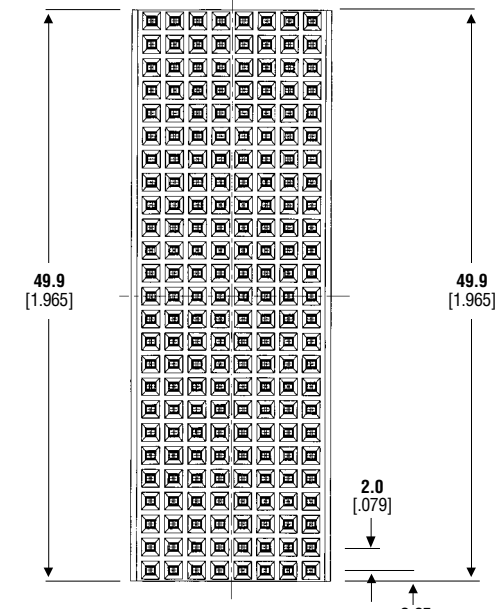

Type F

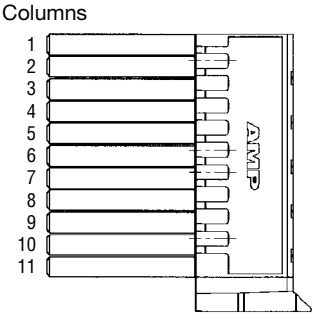

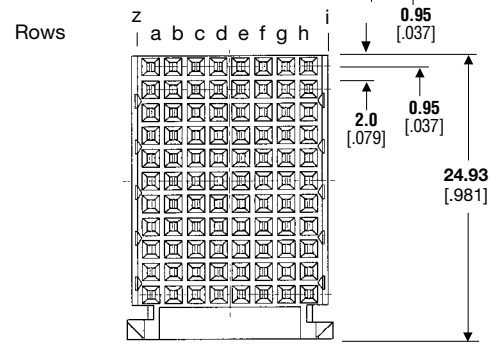

For complete product information, order Catalog 65911

Products for Industrial & Commercial Applications

Dimensions are shown for reference purposes only.

Dimensions are in inches and millimeters unless otherwise specified. Values in brackets are metric equivalents.

Specifications subject to change.

Technical Support Center
1-800-522-6752
www.tycoelectronics.com

Vertical Female Connectors, 8 Row, Types D, E and F

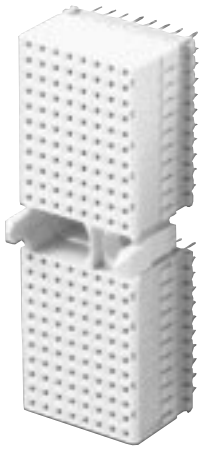

Type D shown

Vertical Female Connector

Type D, E, and F mate with respective vertical male connectors shown on page 3030. They are used in stacking applications offering high density in a limited space.

Material and Finish:

Glass filled polyester housing, gray, UL94 V-0 rated Phosphor-bronze signal contacts Contact area 0.8µm Au over 1.3µm Ni ACTION PIN contact 0.5µm Sn/Pb over 1.3 µm Ni.

Tooling — page 3046.

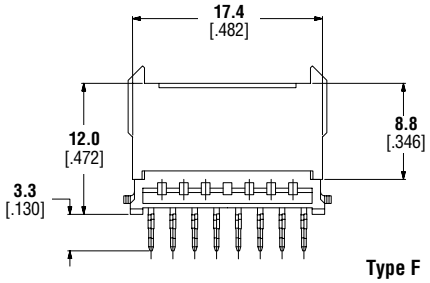

Type F shown

Type	Part Numbers
Type D	646538-1
Type E	646539-1
Type F	646540-1

Type D Columns

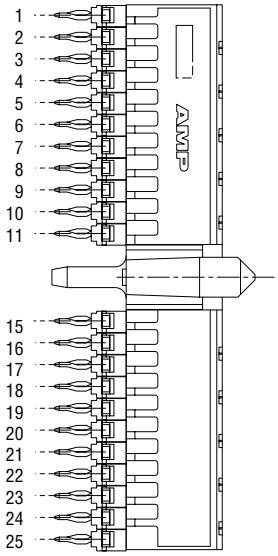

Rows h g f e d c b a

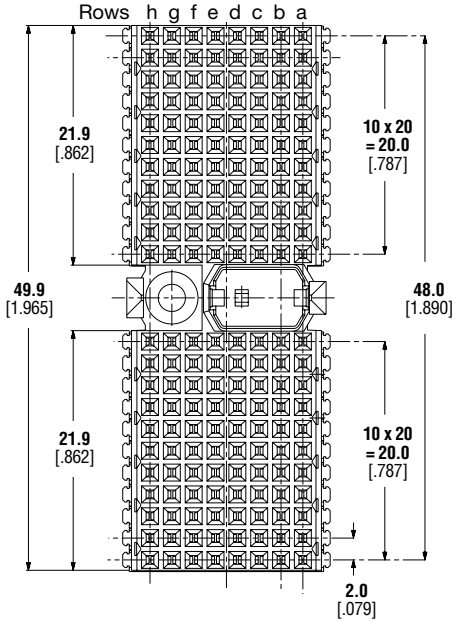

Type E Columns

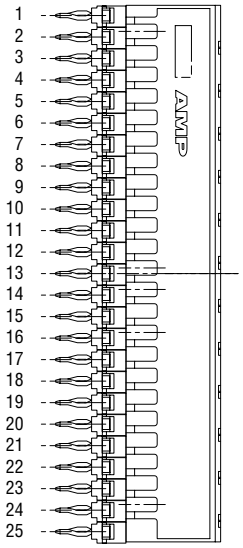

Rows h g f e d c b a

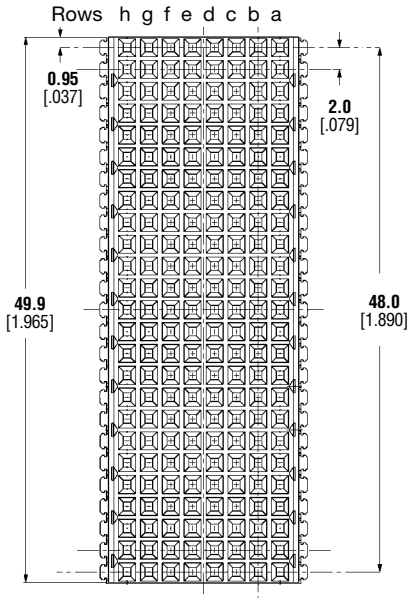

Type F Columns

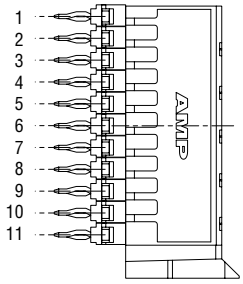

Rows h g f e d c b a

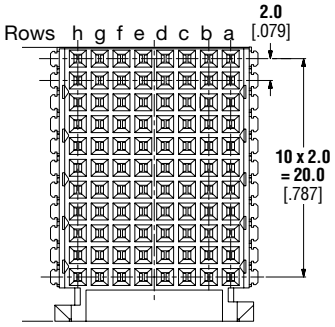

For complete product information, order Catalog 65911

Products for Industrial & Commercial Applications

Dimensions are shown for reference purposes only.

Dimensions are in inches and millimeters unless otherwise specified. Values in brackets are metric equivalents.

Specifications subject to change.

Technical Support Center
1-800-522-6752
www.tycoelectronics.com

Right Angle Male Connectors, Types A, B, C

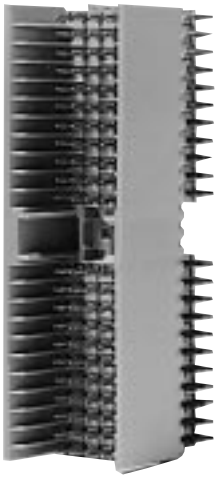

Right Angle Male Connector

Used for card extender and reverse sex daughter-to-backplane application

Types A, B and C connectors mate with respective right angle female connectors for card extenders and with vertical female connectors for reverse sex connection. Refer to pages 3027 and 3036.

Type A has 110 contacts with center guiding and keying facility; Type B has 125 contacts and Type C has 55 contacts with guiding feature. Standard versions have pins with mating level 1; see page 3039 for other options.

Two performance levels are available; standard and reduced cross-talk

Electrical Characteristics — page 3023.

Material and Finish:

Glass filled polyester housing, gray, UL94 V-0 rated Phosphor-bronze signal contacts Contact area 0.8µm Au over 1.3µm Ni ACTION PIN contact 0.5µm Sn/Pb over 1.3 µm Ni

Coding keys for type A page 3039.

Tooling — page 3046.

Arrangement

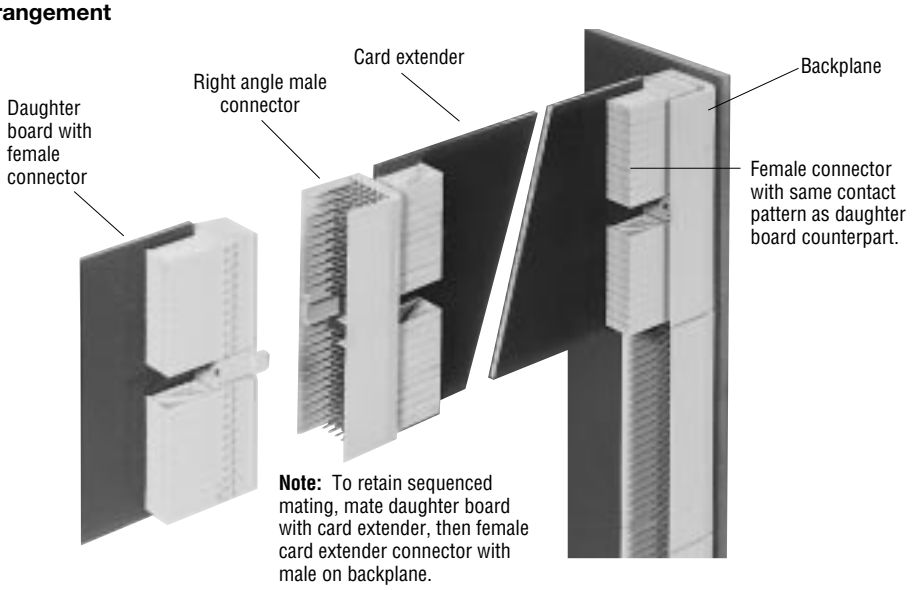

Note: To retain sequenced mating, mate daughter board with card extender, then female card extender connector with male on backplane.

Side Elevation

Standard version

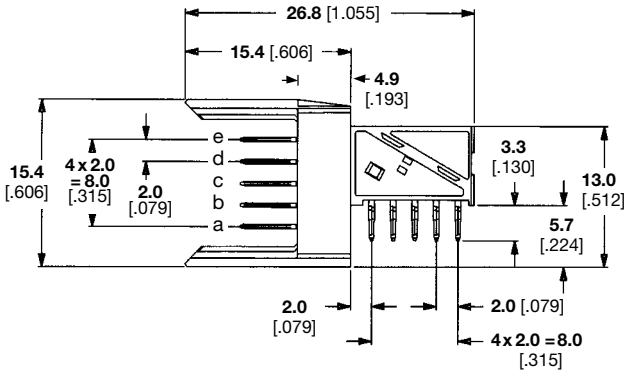

Reduced crosstalk version. Same dimensions as standard version. consult Tyco Electronics.

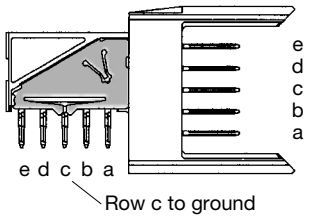

Type	Part Numbers	
	Standard	Reduced CrossTalk
Type A	106015-1	352271-1
Type B	106014-1	352272-1
Type B 22col	352131-1	—
Type B 19col	352406-1	—
Type C	106012-1	352273-1

For complete product information, order Catalog 65911

Products for Industrial & Commercial Applications
Dimensions are shown for reference purposes only.
Dimensions are in inches and millimeters unless otherwise specified. Values in brackets are metric equivalents.
Specifications subject to change.
Technical Support Center 1-800-522-6752 www.tycoelectronics.com

Right Angle Male Connectors, Types A, B, C

Type A, 110 Signal Pins, 50 mm Module

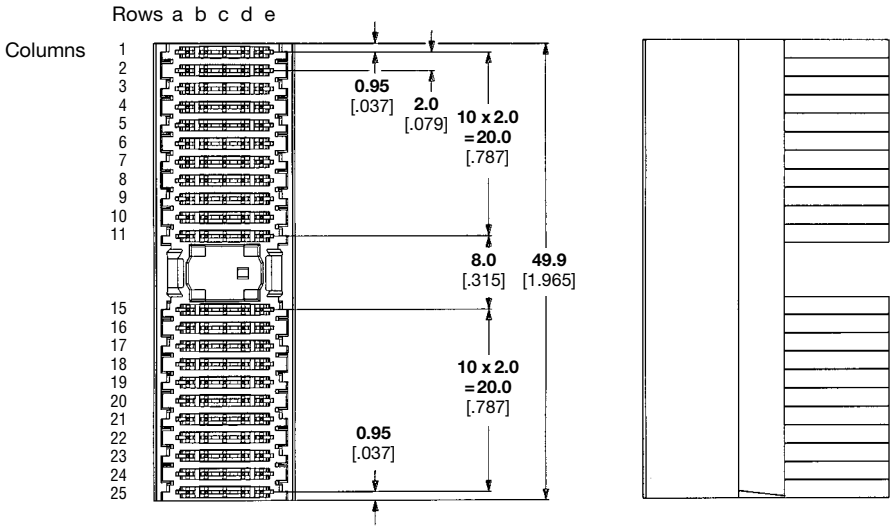

Type B, 125 Signal Pins, 50 mm Module

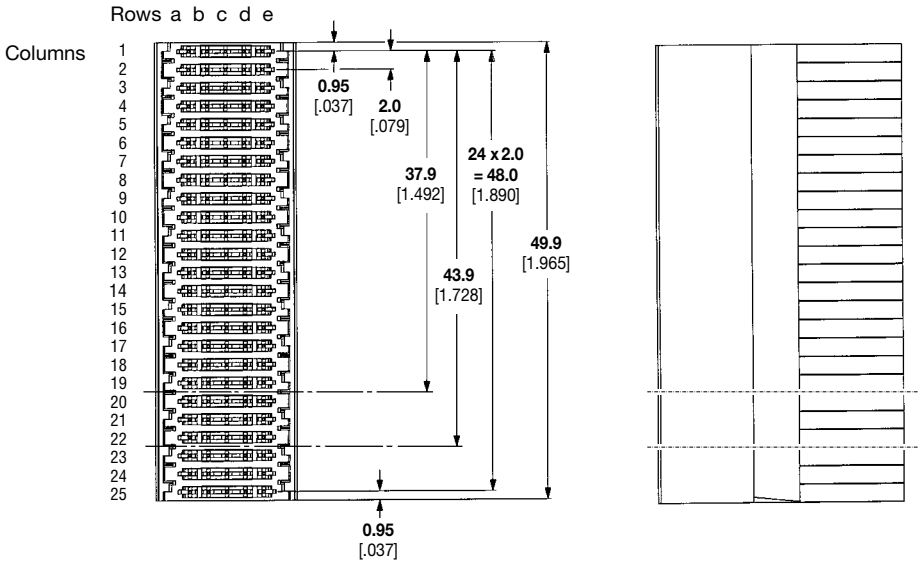

Type C, 55 Signal Pins, 25 mm Module

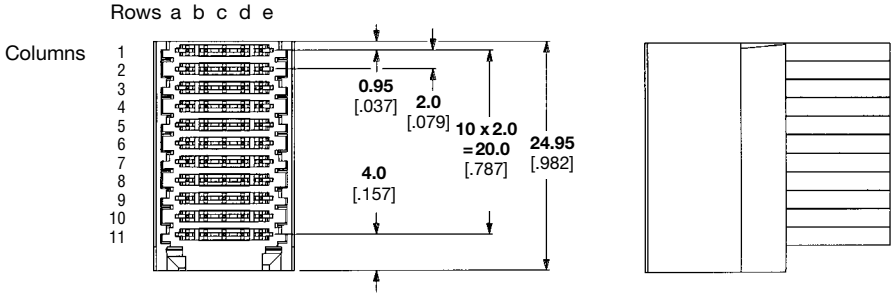

For complete product information, order Catalog 65911

Products for Industrial & Commercial Applications
Dimensions are shown for reference purposes only.
Dimensions are in inches and millimeters unless otherwise specified. Values in brackets are metric equivalents.
Specifications subject to change.
Technical Support Center
1-800-522-6752
www.tycoelectronics.com

Vertical Female Connectors, 5 Row, Types A, B and C

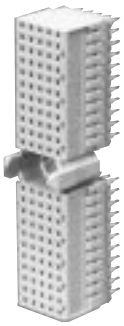

Vertical Female Connectors

Types A, B and C mate with respective right angle and vertical male connectors shown on pages 3025 and 3034.

Type A has 110 contacts and center keying and guiding. Type B has 125 contacts and Type C has 55 contacts with guiding feature. All are stackable without change in contact pitch according to the chart on page 3024.

Limited other contact patterns are available; see page 3039.

Electrical Characteristics — page 3024.

Materials and Finish:

Glass filled polyester housing.
Phosphor-bronze signal contacts
Contact area 0.8µm Au over 1.3µm Ni
ACTION PIN contact 0.5µm Sn/Pb over 1.3 µm Ni.

Coding keys for type A page 3039.

Tooling — page 3046.

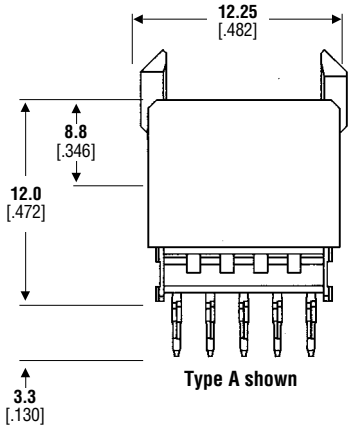

Type	Part Numbers
Type A (without locating peg)	106773-1
Type A (with locating peg)	352457-1
Type B	106774-1
Type B 22 col	352268-1
Type B 19 col	352269-1
Type C	106775-1

Type A Columns

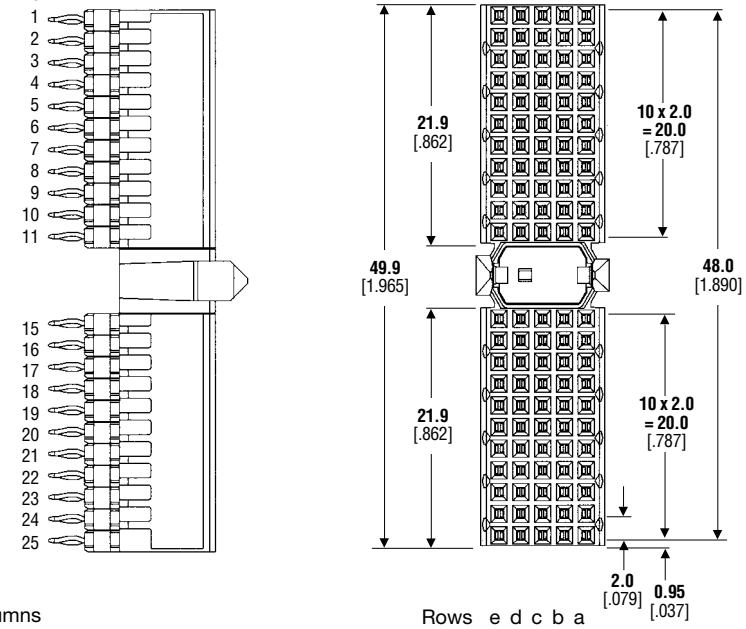

Type B Columns

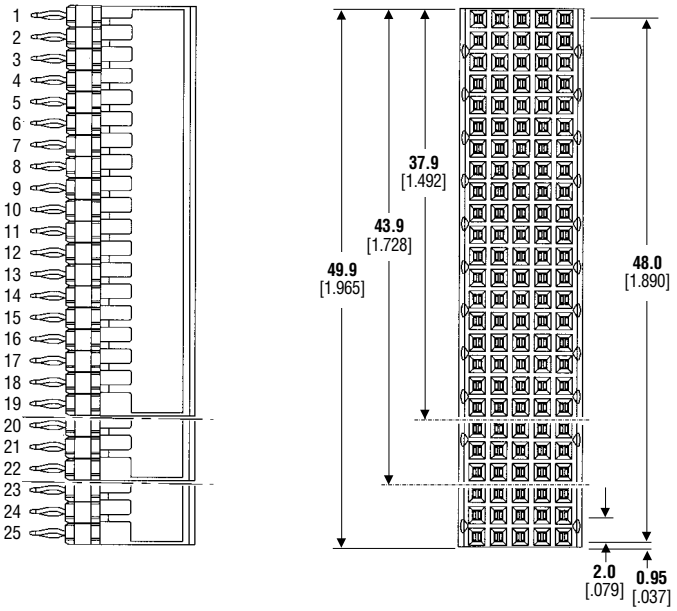

Type C Columns

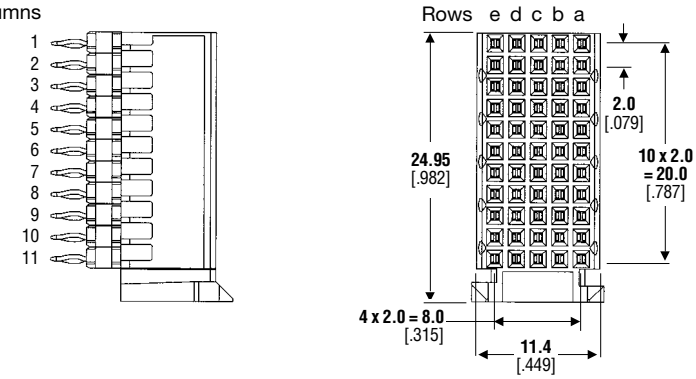

For complete product information, order Catalog 65911

Products for Industrial & Commercial Applications

Dimensions are shown for reference purposes only.

Dimensions are in inches and millimeters unless otherwise specified. Values in brackets are metric equivalents.

Specifications subject to change.

Technical Support Center
1-800-522-6752
www.tycoelectronics.com

Midplane Board-to-Board Arrangements

Midplane Connection

Daughter boards can be connected to either side of a backplane in parallel, asymmetric parallel and cross connect configuration. Vertical male connectors with feedthrough pins are used with one piece shrouds on page 3038.

Feedthrough pins can be in 5, 5+2, 8 or 8+2 row configuration.

Daughter card connectors are the same for front and rear using types A, B, C, D, E and F.

Parallel Connection

Parallel connection can be symmetric, where the daughter cards are the same way up, or asymmetric, where they are reversed. Column numbers are reversed on the backplane rear with symmetric orientation.

Cross Connect

Cross connect can be configured with spacers and shrouds as above giving a matrix of pins where male connectors and shrouds coincide, or selective loaded male connectors can be used at the rear, with empty positions to allow for feedthrough posts from the front. Post options U,V,or X must be used. When male connectors are used front and rear, spacers cannot be used to adjust post lengths.

All arrangements can use receptacles with ground return shields. Consult Tyco Electronics if EMI/RFI shielding is required.

5x5 Cross Connect

Special 5x5 connectors are available for cross connect applications.

EMI/RFI shielding is available for these parts.

Vertical Board Arrangement, shown with symmetrical daughter boards

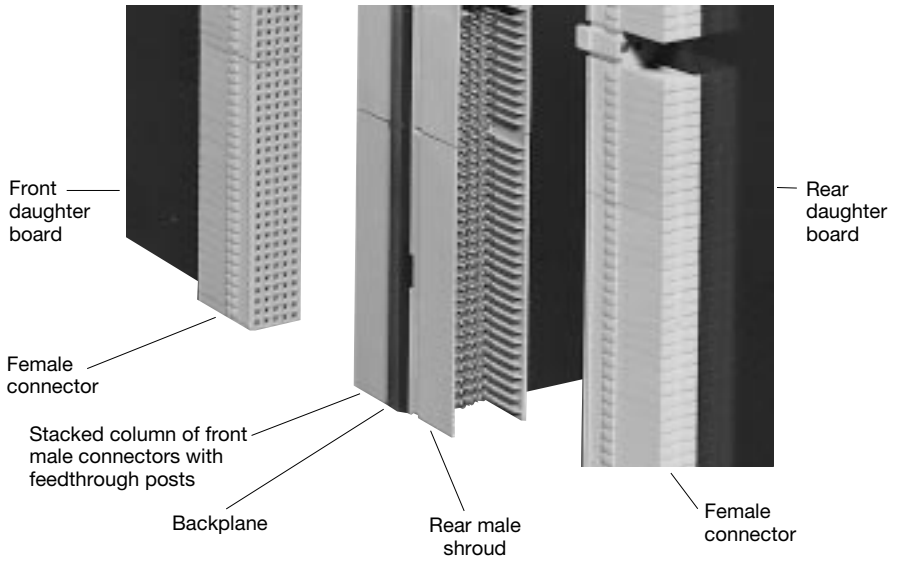

Cross-connect Arrangement

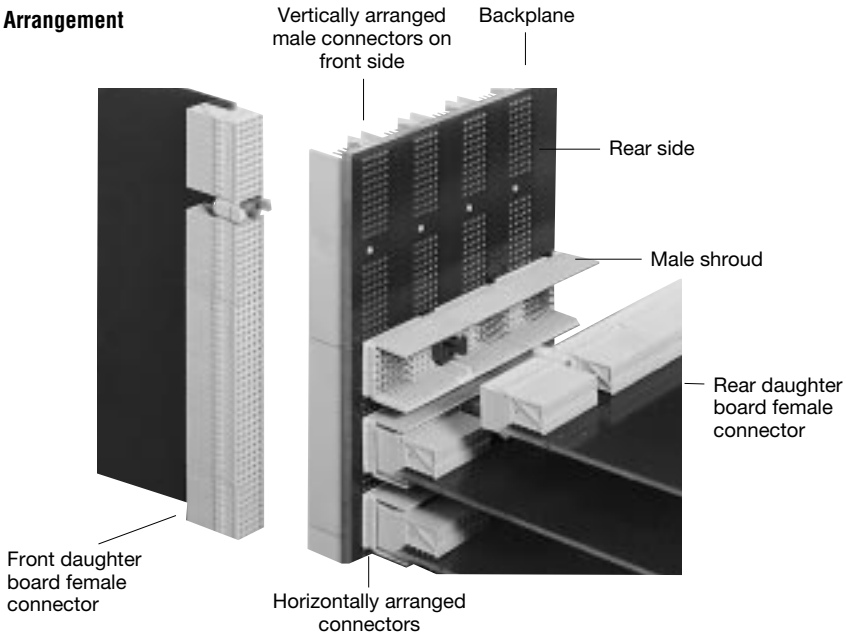

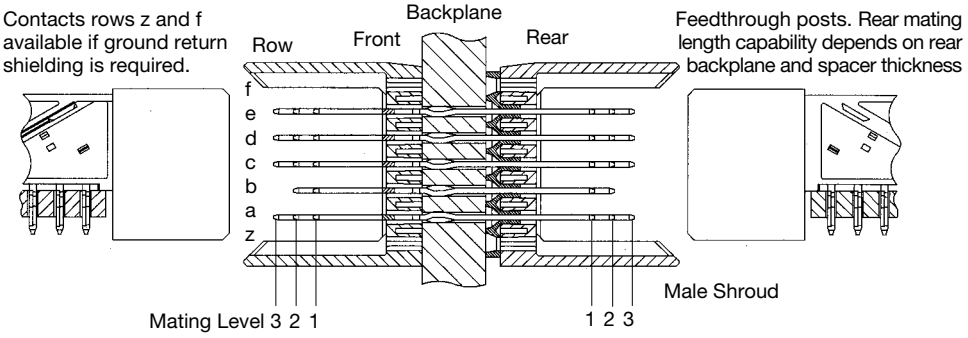

For complete product information, order Catalog 65911

One Piece Shrouds

Type A, B, C, D, E or F Shrouds

One piece shrouds can be used with several backplane thicknesses to provide required pin mating levels (see chart for options available). The single piece design also provides a reduced part count, lower applied cost solution.

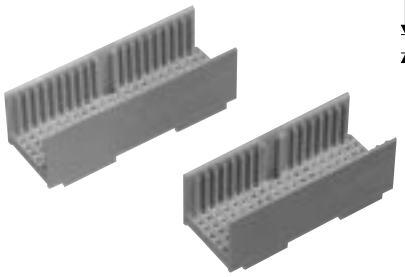

Type A

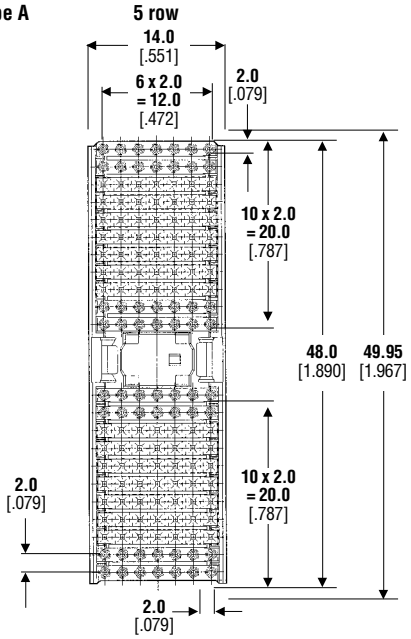

Type B

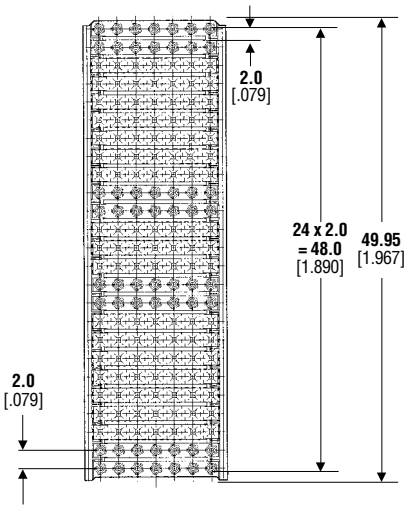

Type AB Shrouds

Type AB shrouds require male feed thru connectors with short tail or vacant ground pin positions in the guide feature locations.

Type C

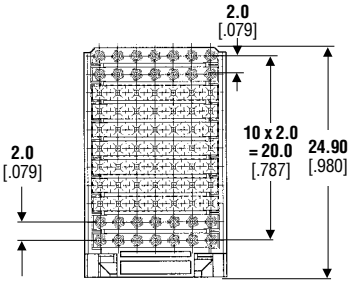

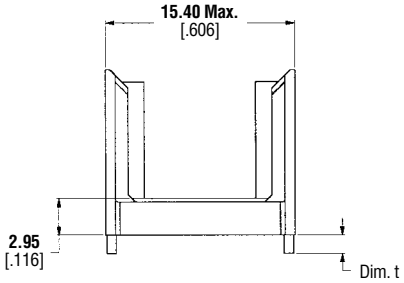

Shroud Type 't'	Part Numbers						
	0 [.000]	**.9** [.035]	**1.1** [.043]	**1.3** [.051]	**1.5** [.059]	**1.7** [.067]	**1.9** [.075]
A	646478-1	646478-2	646478-3	646478-4	646478-5	646478-6	646478-7
B	646479-1	646479-2	646479-3	646479-4	646479-5	646479-6	646479-7
C	646480-1	646480-2	646480-3	646480-4	646480-5	646480-6	646480-7
B (19)	646481-1	646481-2	646481-3	646481-4	646481-5	646481-6	646481-7
B (22)	646482-1	646482-2	646482-3	646482-4	646482-5	646482-6	646482-7
AB (19)	646483-1	646483-2	646483-3	646483-4	646483-5	646483-6	646483-7
AB (22)	646484-1	646484-2	646484-3	646484-4	646484-5	646484-6	646484-7
D	646476-1	646476-2	646476-3	646476-4	646476-5	646476-6	646476-7
E	646477-1	646477-2	646477-3	646477-4	646477-5	646477-6	646477-7
F	646525-1	646525-2	646525-3	646525-4	646525-5	646525-6	646525-7

For complete product information, order Catalog 65911

Products for Industrial & Commercial Applications

Dimensions are shown for reference purposes only.

Dimensions are in inches and millimeters unless otherwise specified. Values in brackets are metric equivalents.

Specifications subject to change.

Technical Support Center
1-800-522-6752
www.tycoelectronics.com

Coding Keys and Contact Loading Variants

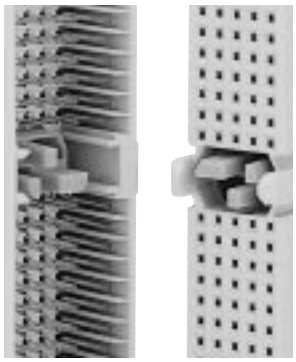

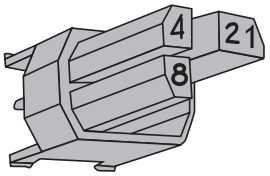

Key for Male Connectors

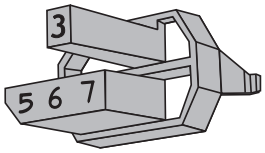

Key for Female Connectors

Coding key sets with combinations of matching colors and complementary numbering

Used in Type A, D, L and M male and female connectors and shrouds.

Male and female keys are polarized for male and female housing multi-purpose centers; unambiguous keying is by combination of color and code numbered posts.

Keys are inserted from the mating faces of male and female housings, retained by foot clips snap-fitting into housing slots. Removal from the front is possible whenever required.

Material:

Glassfilled Polyimide 6.6.

Color	RAL [1] Number	For Male Connector		For Female Connector	
		Code Number	Key Part Number	Code Number	Key Part Number
Nut brown	8011	1236	100525-3	4578	100526-3
† Strawberry red	3018	1248	100525-9	3567	100526-9
Blue lilac	4005	1356	2-100525-0	2478	2-100526-0
• Brilliant blue	5007	1567	3-100525-2	2348	3-100526-2
Reseda green	6011	2578	5-100525-4	1346	5-100526-4
* Cadmium yellow	1021	3456	5-100525-6	1278	5-100526-6
Slate gray	7015	3467	5-100525-9	1258	5-100526-9
Steel blue	5011	3478	6-100525-1	1256	6-100526-1
Pastel orange	2003	3568	6-100525-3	1247	6-100526-3
Ochre yellow	1024	4678	6-100525-9	1235	6-100526-9

[1] RAL is a Trademark of the Central Organization for product assurance in Germany.
• For CompactPCI 5.0V
* For CompactPCI 3.3V
† For CompactPCI Telephony
Note: The color/code no. combinations, listed above, follow IEC 61076-4-101 recommendations. Other versions are available, see drawings.

Contact Loading Variants

For contact loading variants of Z-PACK 2mm HM connectors, refer to the appropriate instruction sheet shown here. These sheets can be obtained from AMP FAX Service and allow you to select an existing contact loading to suit your requirements.

Instruction Sheet Numbers

	5 Row	5+2 Row	5 row feedthrough	5+2 feedthrough	8 and 8+2 row
Type A Male	411-19410	411-19412	411-19411	411-19413	Consult Tyco Electronics
Type B Male	411-19414	411-19416	411-19415	411-19417	
Type C Male	411-19418	411-19420	411-19419	411-19421	
Type B 22 Column Male	411-19425				
Type B 19 Column Male	411-19426				
Type M Male	411-19422				
Type M-MSC and Rev Male	411-19423				
5x5 Cross Connect Male	411-19427				
Right Angle Male, all types	411-19428				
Right Angle Female, all types	411-19429				

For complete product information, order Catalog 65911

Products for Industrial & Commercial Applications
Dimensions are shown for reference purposes only.
Dimensions are in inches and millimeters unless otherwise specified. Values in brackets are metric equivalents.
Specifications subject to change.
Technical Support Center 1-800-522-6752 www.tycoelectronics.com

Universal Power Module - Vertical Receptacle

The AMP Universal Power Module is a three position, modular, Hard Metric board-to-board power connector designed to be compatible with Z-PACK 2mm HM Connectors. The design is in an "inverse-sex" orientation and the vertical receptacle module meets the IEC 950 safety requirements for finger probe protection.

Both the headers and receptacle utilize ACTION PIN press-fit leads for ease of assembly onto printed circuit boards. Additionally, the vertical receptacle leads are polarized to allow only one orientation onto the printed circuit board, eliminating the possibility of reverse placement.

The Universal Power Module is compatible with a wide variety of other AMP board-to-board connectors including Z-PACK Stripline 100, AMP-HDI, TBC, TBC Plus and Eurocard connectors.

The housing is a high temperature thermoplastic, and the phosphor bronze contacts are gold-over-nickel plated on the mating surfaces.

The modules are rated to carry a maximum of 23.5 amperes or 7.8 amperes per contact, fully energized for up to 250 mating cycles.

The right angle header contacts are available with sequenced lengths for "make-first/break-last" applications.

Generous alignment features designed into the housings and optional guide pins and receptacles make the AMP Universal Power Module ideal for "blind mating" applications.

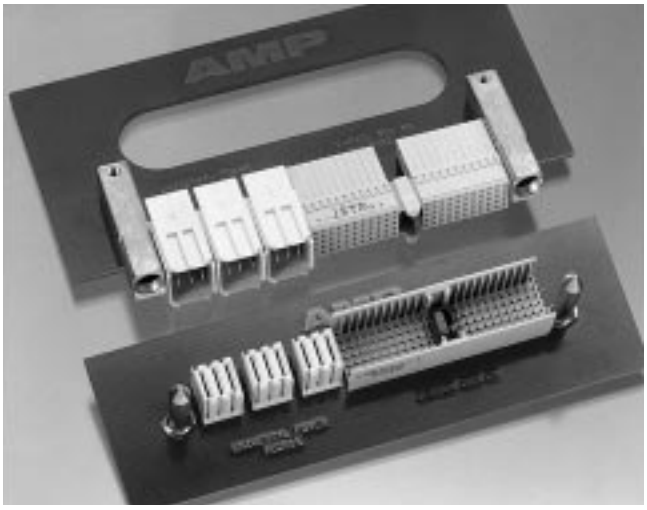

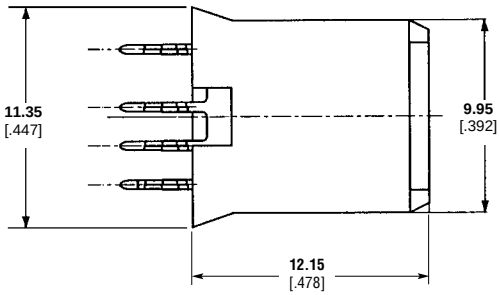

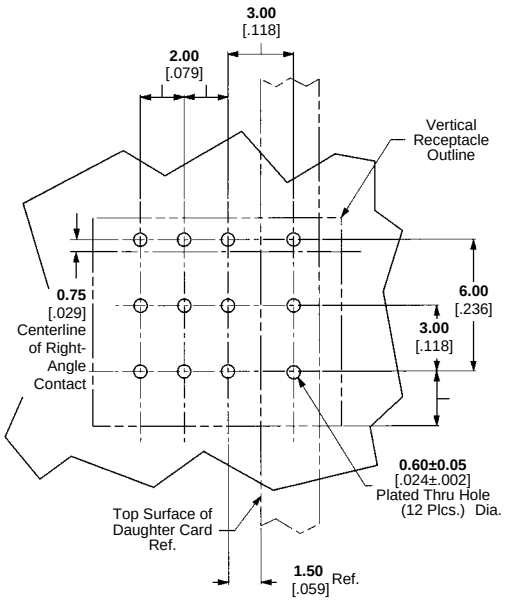

Recommended PC Board Hole Layout

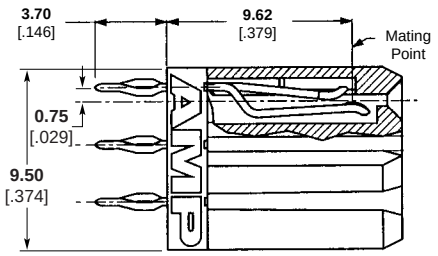

	Position Loaded	Part Numbers
Vertical Receptacle	ABC	223955-2
	AC	223984-1

For complete product information, order Catalog 65911

Products for Industrial & Commercial Applications

Dimensions are shown for reference purposes only.

Dimensions are in inches and millimeters unless otherwise specified. Values in brackets are metric equivalents.

Specifications subject to change.

Technical Support Center
1-800-522-6752
www.tycoelectronics.com

Universal Power Module - Right Angle Header

Material and Finish:

Housing — Liquid crystal polymer, natural color

Contacts — Phosphor bronze, plated 0.00127 [.000050] min. gold in mating area, 0.00050 [.000020] min. tin-lead on ACTION PIN post area, with entire contact underplated 0.00127 [.000050] min. nickel

Note: Contact lubrication with Bellcore approved lubricant

Related Product Data:

Guiding Hardware (Optional) — page 3042.

Application Tooling:

Header — Seating Tool, 224441-1 Board Support Fixture, 224442-1.

Receptacle — Seating Tool, 224421-1 Board Support Fixture, 217602-1.

Technical Documents:

Product Specification
108-1651

Application Specification
114-1103

Instruction Sheet
408-4169 (Receptacle Seating Tool 224421-1)

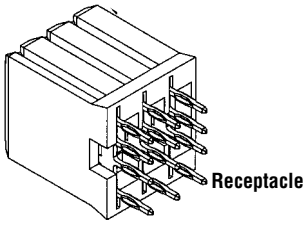

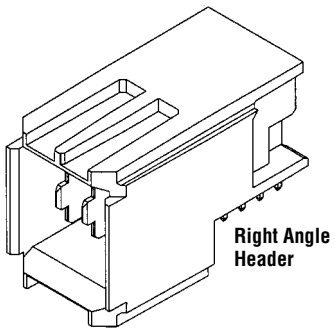

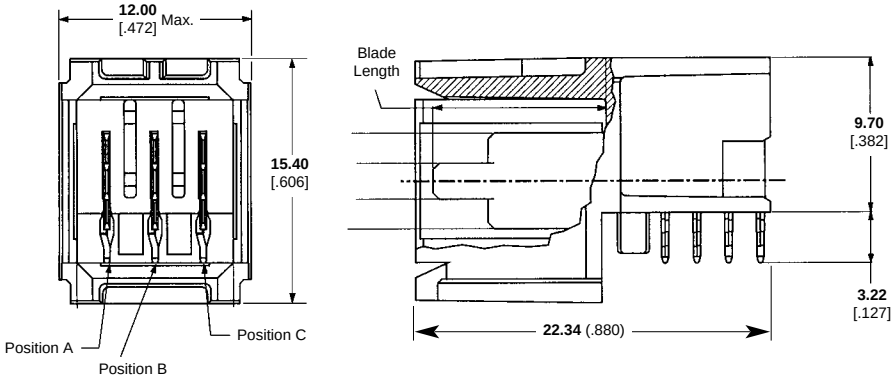

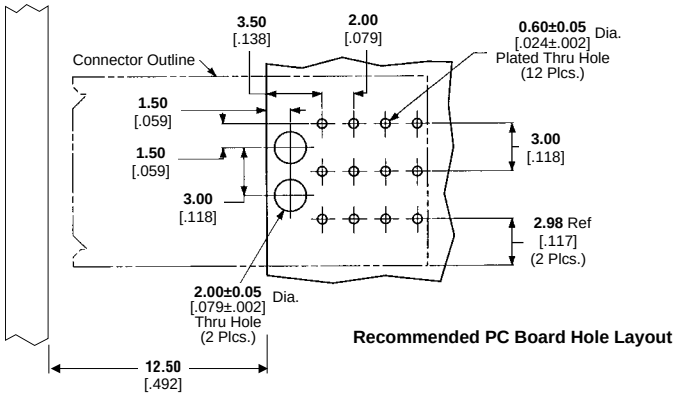

Recommended PC Board Hole Layout

Blade Length Dimensions			Right Angle Header Part Numbers
Position A	Position B	Position C	
10.90 .429	**10.90** .429	**10.90** .429	223961-1
10.90 .429	**9.30** .366	**10.90** .429	223962-1
10.90 .429	**9.30** .366	**9.30** .366	223968-1
10.90 .429	**7.68** .302	**10.90** .429	223972-1
10.90 .429	**7.68** .302	**9.30** .366	223971-1
10.90 .429	**7.68** .302	**7.68** .302	223970-1
9.30 .429	**10.90** .429	**9.30** .366	223963-1
9.30 .366	**10.90** .429	**7.68** .302	223964-1
9.30 .366	**9.30** .366	**9.30** .366	223967-1
9.30 .366	—	**9.30** .366	223975-1
9.30 .366	**9.30** .366	**7.68** .302	223981-1
9.30 .366	**7.68** .302	**9.30** .366	223965-1
7.68 .302	**9.30** .366	**7.68** .302	223983-1
7.68 .302	**7.68** .302	**9.30** .366	223980-1
7.68 .302	**7.68** .302	**7.68** .302	223974-1

For complete product information, order Catalog 65911

Products for Industrial & Commercial Applications

Dimensions are shown for reference purposes only.

Dimensions are in inches and millimeters unless otherwise specified. Values in brackets are metric equivalents.

Specifications subject to change.

Technical Support Center
1-800-522-6752
www.tycoelectronics.com

Guiding Hardware

Guide Pin

Material and Finish:

Passivated stainless steel

Part Number 223956-1

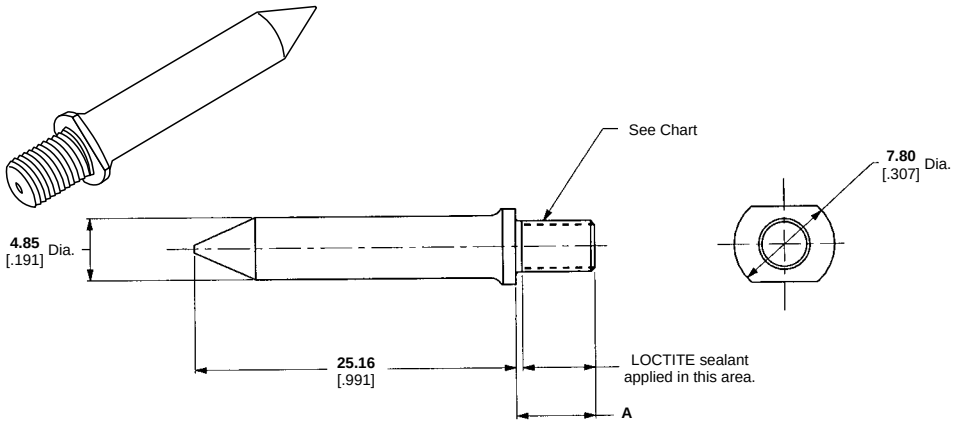

A	Thread	Part Numbers
7.5 .295	M4 x 7-6G	223982-1*
9.2 .362	M4 x 7-6G	223969-7
12.7 .500	8-32 UNC-2A	223969-4
12.7 .500	M4 x 7-6G	223969-1
6.2 .244	M4 x 7-6G	223956-1

*6.35 Hex Base

Female Guide Module

Material and Finish:

Zinc alloy, chromate conversion coated

Related Product Data:

Application Tooling —
Seating Tool, 224440-1
Board Support Fixture, 217603-1

Technical Documents:

Product Specification
108-1651
Application Specification
114-1103
Part Number 223957-1
(as shown)
Part Number 223979-1
(dual alignment posts)

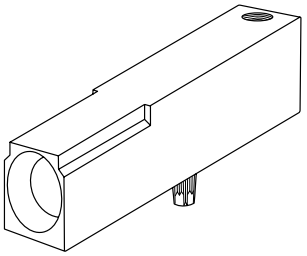

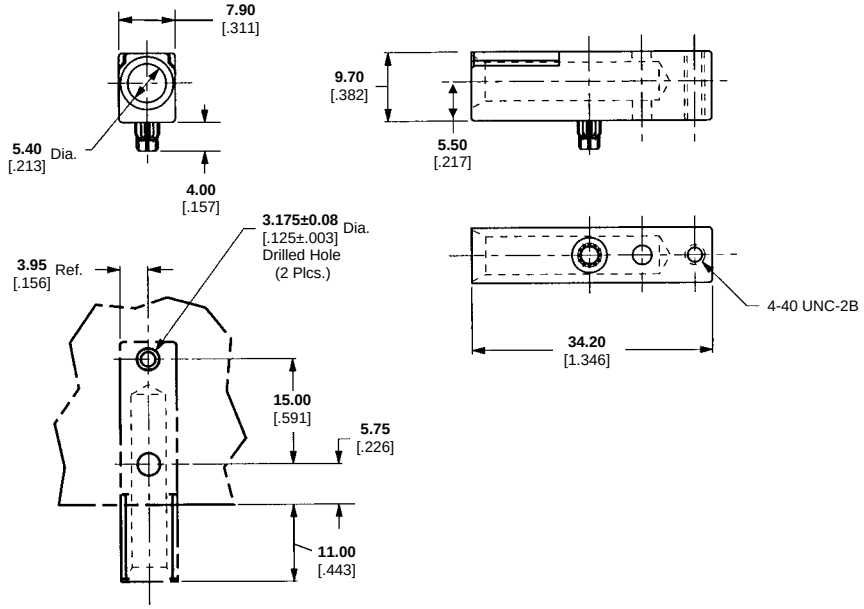

Recommended PC Board Hole Layout

For complete product information, order Catalog 65911

Products for Industrial & Commercial Applications
Dimensions are shown for reference purposes only.
Dimensions are in inches and millimeters unless otherwise specified. Values in brackets are metric equivalents.
Specifications subject to change.
Technical Support Center
1-800-522-6752
www.tycoelectronics.com

Guiding Hardware

Static Discharge Guide Pins

Ground connection and guidance can be combined using this system which can be used instead of the guide pins shown on page 3042. The contacts have a rating of 10A and give a make/break position 12mm [.472] in advance of level 3 signal contacts.

Alternative pin lengths are possible and the pin contact housing can be omitted if desired.

Materials and Finish:

Housings — Glass filled polyester gray, UL94 V-0 rating

Contacts — Pin Brass Receptacle Copper alloy

Plating — 0.8µm Au in contact area over 0.8µm min Ni

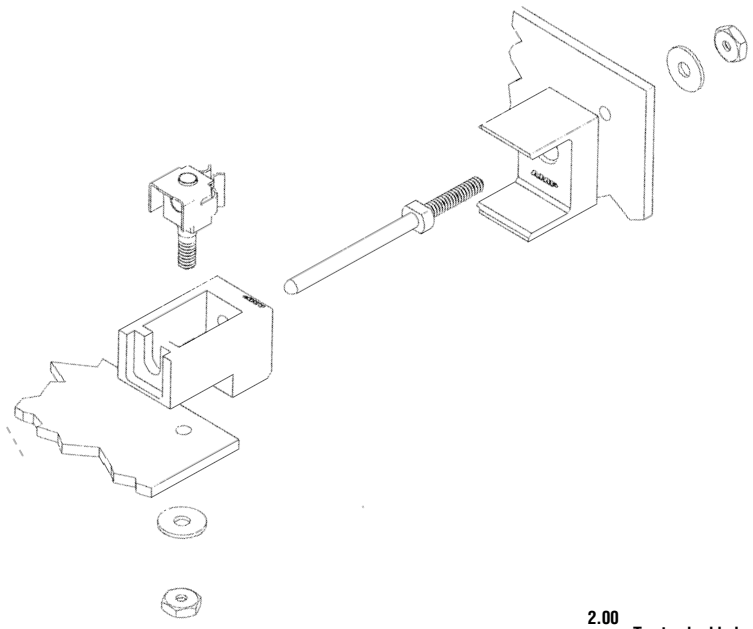

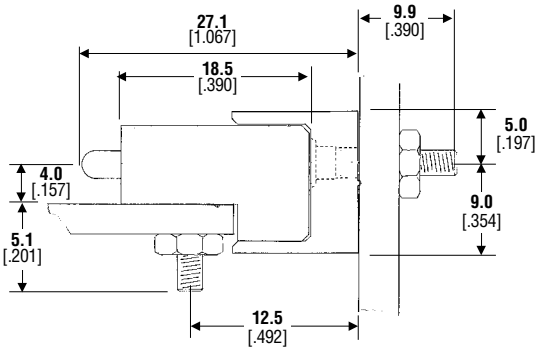

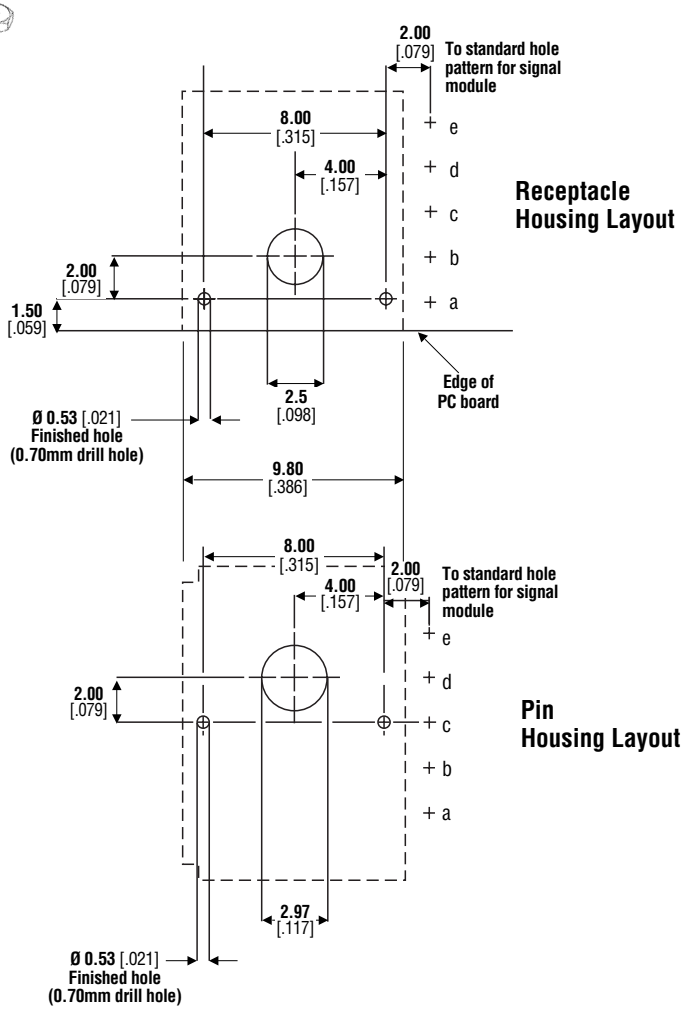

	Part Numbers
Pin Contact	532828-5
Pin Contact Housing	646274-1
Receptacle Contact	533065-6
Rec Contact Housing	646273-1
Nut	21124-4
Washer	986794-1

For complete product information, order Catalog 65911

Products for Industrial & Commercial Applications
Dimensions are shown for reference purposes only.
Dimensions are in inches and millimeters unless otherwise specified. Values in brackets are metric equivalents.
Specifications subject to change.
Technical Support Center 1-800-522-6752 www.tycoelectronics.com

Dimensions and Tolerances

Coordination dimensions and tolerances

The accompanying diagrams show the depth dimensions used in the equipment practice, used for both 2mm and 2.5mm [.079 and .098] systems, and allowable tolerances for subrack and backplane bending.

Coordination Dimension Mref

As defined in the DIN 43356 and IEEE 1301 Hard Metric equipment practices for the 2.5mm system, and used in IEC 61076-4-101, the dimension **Mref** is the range for free board engagement with the backplane.

The specified contact mating must be maintained on a mated pair of connectors, within the range of **M**=14 to 16.5mm [.551 to .650] for the shortest mating level 1.

For mating levels 2 and 3 the contact ranges are 14 to 18mm [.551 to .709] and 14 to 19.5mm [.551 to .768].

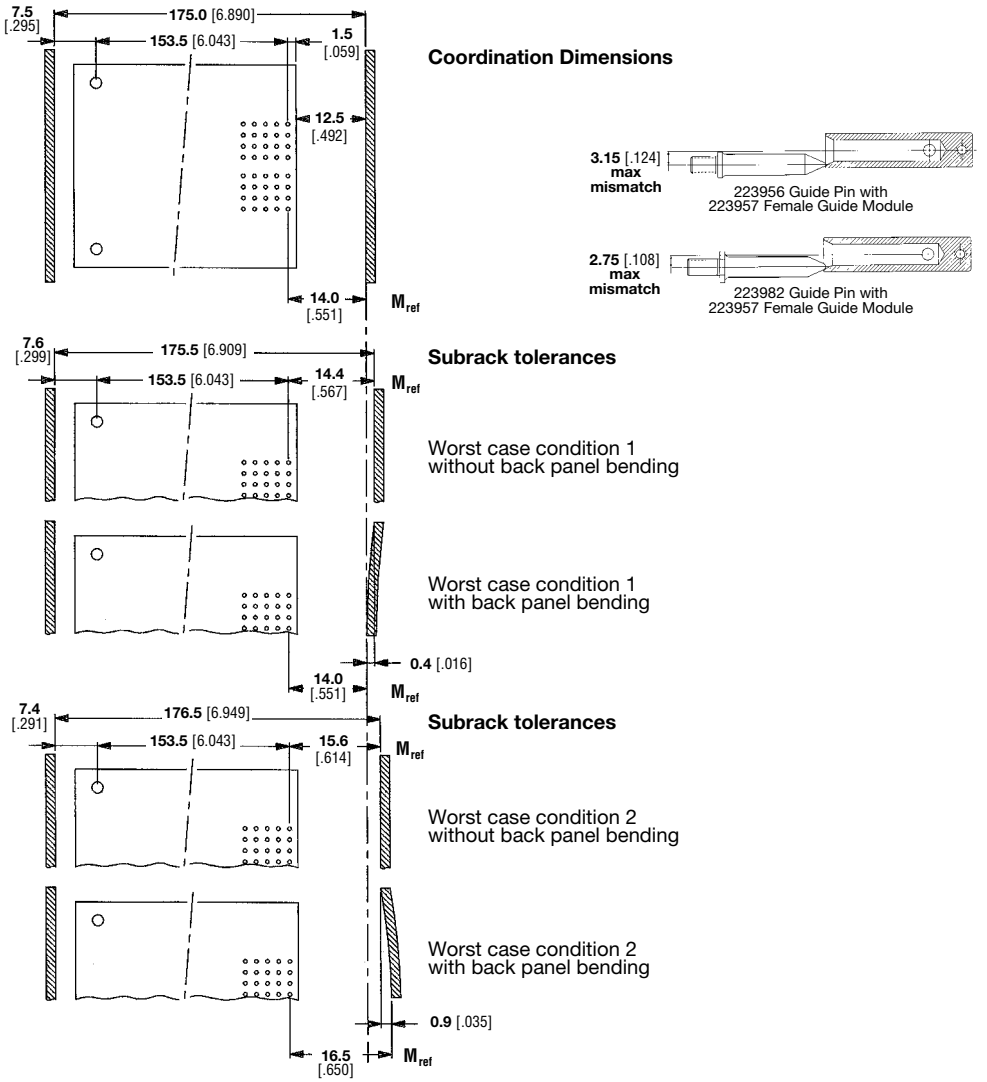

Misalignment and inclination tolerances

Guiding and polarizing lugs of Type A, M and L connectors, also at ends of Type C and N, allow the mating tolerances shown here.

Tolerances apply only when guide lugs are separated by only one Type B module without lugs.

Allowed misalignment, transverse & longitudinal axes

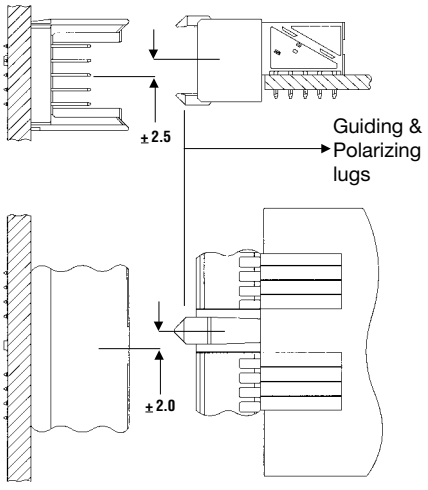

Allowed inclination, transverse & longitudinal axes

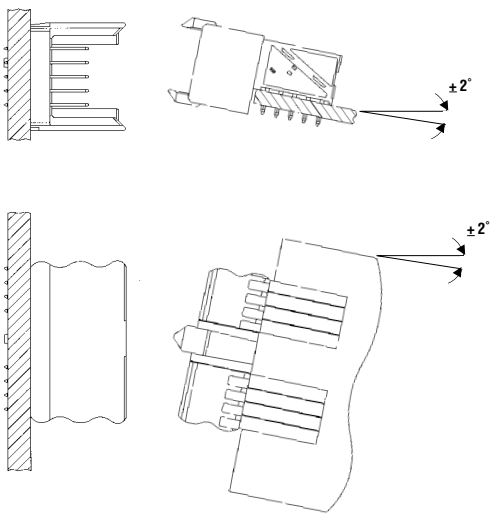

For complete product information, order Catalog 65911

Products for Industrial & Commercial Applications

Dimensions are shown for reference purposes only.

Dimensions are in inches and millimeters unless otherwise specified. Values in brackets are metric equivalents.

Specifications subject to change.

Technical Support Center
1-800-522-6752
www.tycoelectronics.com

Dimensions

Fixed Board Male Connectors

Type A, B, C, M, M-MSC and M-MSC-rev. fixed board male connectors have signal contact positions identified by row letters and column numbers, shown right, viewed toward the frontside of the backplane.

Contact positions can be filled or left unfilled, as required, for a customer's circuit arrangement. Contact pins for each position can be specified from any of the options shown below, excepting:

- Rows **z** and **f**, for ground return shield contacts only, must always be level 3.
- Row **b** is not available for level 3 (length 11.2mm [.441])contacts when mating with a right angle female connector.
- For rear board cable connectors, use posts providing rear mating length 1 after allowing for board thickness, unless sequenced mating is required.

Use the codes A-V to specify front/rear contact for each position on the special option chart, see Catalog 1307515.

Midplane Cross-connect Applications

Cross-connections, require the feedthrough posts to be rotated 90°, so that the mating surface aligns with the female receptacle spring beams.

Connector Types

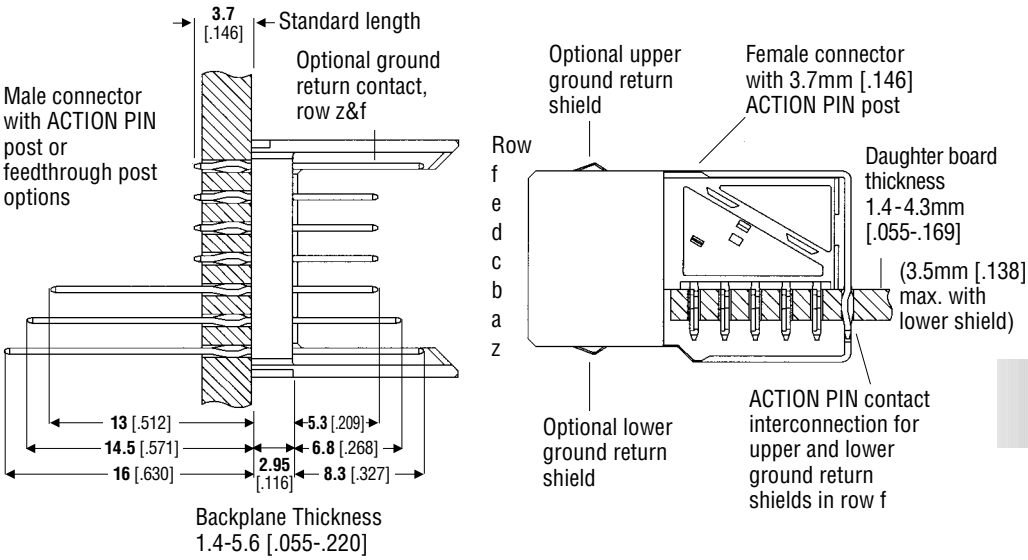

Male Pin Options

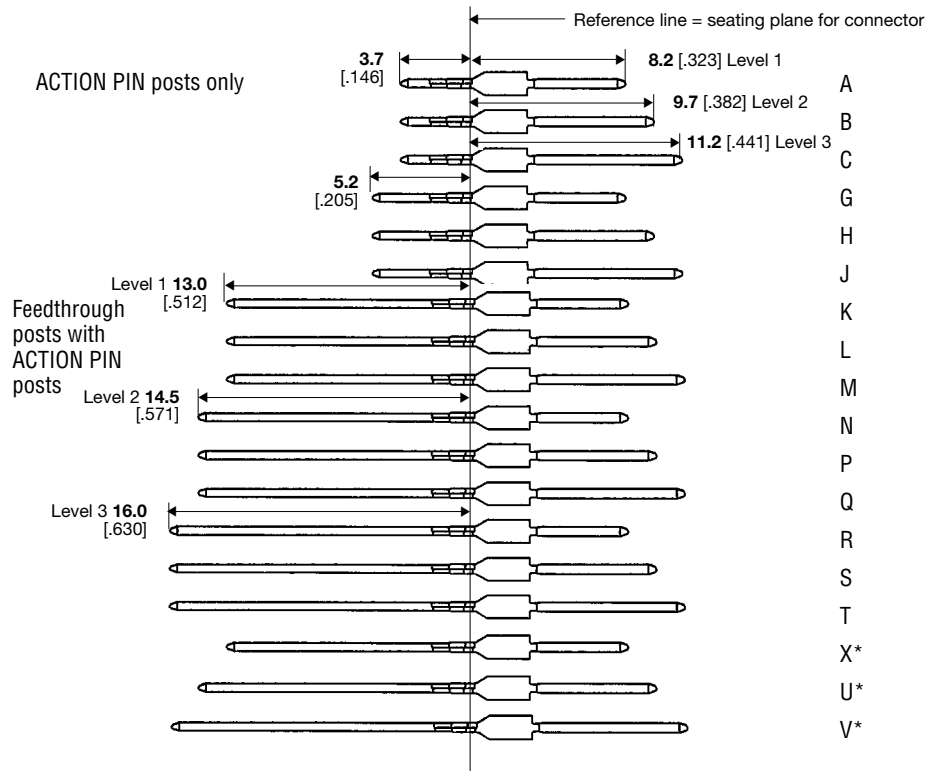

*X,U,V are only used for cross connect applications. Not all versions are tooled.

For complete product information, order Catalog 65911

Products for Industrial & Commercial Applications
Dimensions are shown for reference purposes only.
Dimensions are in inches and millimeters unless otherwise specified. Values in brackets are metric equivalents.
Specifications subject to change.
Technical Support Center 1-800-522-6752 www.tycoelectronics.com

Z-PACK 2mm HM Connector Insertion Tooling — Flat Rock Style

There are two styles of connector insertion tooling available to suit different production needs.

- "Flat Rock" - tools are fitted to the connector and are suitable for multiple connector insertion when used with a high force press
- Quick Change (see page 3048)

Description	Part Numbers: Upper Insertion Tooling	Part Numbers: Support Tooling	Instruction Sheet Number
Instruction sheet summary (with insertion information for most 2mm HM components	—	—	411-19305
Upper and Lower Adapters for AMP insertion machines. For all types	—	679980-1/2/3	408-4038
Vertical Males			
5/5+2 row, Type A	90753-1	†	408-9912
5/5+2 row, Type B	90755-1	†	408-9914
5/5+2 row, Type B (19 columns)	90755-3	†	—
5/5+2 row, Type B (22 columns)	90755-2	†	—
5/5+2 row, Type C	90757-1	†	408-9916
8/8+2 row, Type D	224671-2	†	408-4281
8/8+2 row, Type E	224668-2	†	408-4282
8/8+2 row, Type F	224668-3	†	408-4282
Right Angle Females - Unshielded			
Type A	122559-1	122561-1	408-4216
Type B	122559-1	122561-1	408-4216
Type C	122559-1	122561-1*	408-4216
Type D	318866-1	318867-1	408-4304
Type E	318866-1	318867-1	408-4304
Type F	91326-1	318867-1*	408-4304
Right Angle Females - Shielded			
Type A (except TDM J4)	122562-1	122561-1	408-4382
Type A for TDM J4	91316-1	—	—
Type B	122562-1	122561-1	408-4382
Type B (19 columns)	122562-1	122561-1*	408-4382
Type B (22 columns)	122562-1	122561-1*	408-4382
Type AB (19 columns)	122562-1*	122561-1*	408-4382
Type AB (22 columns)	122562-1*	122561-1*	408-4382
Type C	122562-1	122561-1*	408-4382
Type D	318868-1	318867-1	408-4430
Type E	318868-1	318867-1	408-4430
Type F	91327-1	318867-1	408-4430
Lower Shields			
Type A and B, Right Angle Female	122563-1	122562-1	408-4383
Type C and M, Right Angle Female	122563-1	122562-1	408-4383
Type D and E, Right Angle Female	318869-1	318868-1	408-4429
Type F, Right Angle Female	318869-1	318868-1	408-4429

Description	Part Numbers: Upper Insertion Tooling	Part Numbers: Support Tooling	Instruction Sheet Number
Right Angle Males			
Type A	—	122561-1	408-4216
Type B	—	122561-1	408-4216
Type B (22 columns)	—	122561-1*	408-4216
Type B (19 columns)	—	122561-1*	408-4216
Type C	—	122561-1*	408-4216
Type D	—	—	—
Type E	—	—	—
Vertical Females			
Type A	—	122561-1	—
Type B	—	122561-1	—
Type B (22 columns)	—	122561-1*	—
Type B (19 columns)	—	122561-1*	—
Type C	—	122561-1*	—
Type D	—	—	—
Type E	—	—	—
Shrouds & Spacers			
Type A Shroud and Spacer	90753-1	90753-1	408-9912
Type A, One Piece Shroud	90753-1	90753-1	408-9912
Type B Shroud and Spacer	90755-1	90755-1	408-9914
Type B (19 columns)	90755-3	90755-3	408-9914
Type B (22 columns)	90755-2	90755-3	408-9914
Type B, One Piece Shroud	90755-1	90755-1	408-9914
Type AB, One Piece Shroud (19 columns)	—	90753-1	408-9912
Type AB, One Piece Shroud (22 columns)	—	90753-1	408-991
Type C Shroud and Spacer	90757-1	90757-1	408-9916
Type C, One Piece Shroud	90757-1	90757-1	408-9916
Type D Shroud and Spacer	224671-2	—	408-4281
Type D, One Piece Shroud	224671-2	—	408-4281
Type E Shroud and Spacer	224668-2	—	408-4282
Type E, One Piece Shroud	224668-2	—	408-4282
Type F, One Piece Shroud	224668-3	—	408-4282
Universal Power Module			
Right Angle Male	224441-1	224442-1	408-4280
Vertical Female	224421-1	217602-1	408-4169

* Tool length exceeds connector length; check that tool does not interfere with other components

† Customer Supplied

Contact the Technical Support Center at 1-800-522-6752 if tooling is not indicated.

Flat Rock Insertion Machine (Seating Machine) Options:

1. SM-3 Pneumatic Machine 814700-2
2. SM-10 Electric/Hydraulic Machine 803880-6
3. Manual Arbor Frame 58024-1

Pin Repair Kit Part Number 354687-1 for Z-PACK 2mm HM and FB Pin Contacts

Instruction Sheet
408-9979

Male Connector Insertion

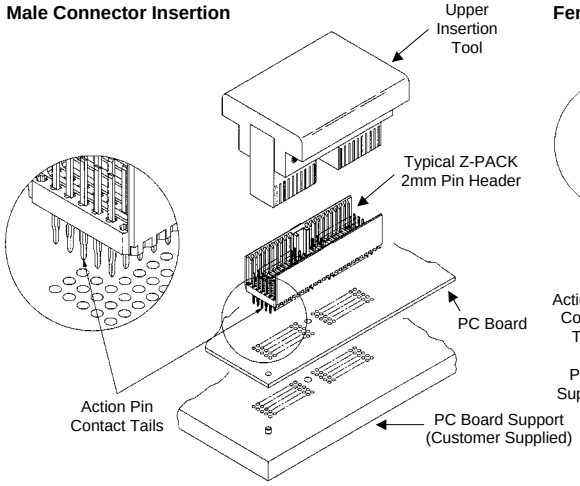

Female Connector Insertion

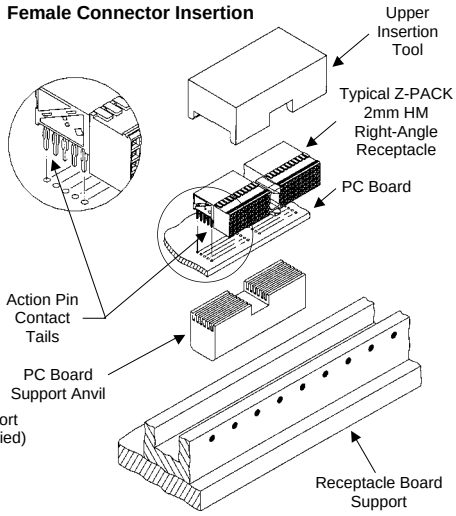

For complete product information, order Catalog 65911

Products for Industrial & Commercial Applications

Dimensions are shown for reference purposes only.

Dimensions are in inches and millimeters unless otherwise specified. Values in brackets are metric equivalents.

Specifications subject to change.

Technical Support Center
1-800-522-6752
www.tycoelectronics.com

Z-PACK 2mm HM Connector Insertion Tooling — Quick Change

■ Quick Change - inserts are attached to the press

All presses can be supplied to suit local power supply conditions. The manual press is recommended for repair tasks.

Description	Part Numbers: Upper Insertion Tooling	Part Numbers: Support Tooling	Instruction Sheet Number
Instruction sheet summary (with insertion information for most 2mm HM components			411-19305
Upper and lower adapters for AMP insertion machines.			411-19306
For all types except L, M, N, L-MSC and M-MSC		679980-1/2/3	408-4038
Vertical Males			
5/5+2 row, Type A	438001-1	438051-1	411-19312
5/5+2 row, Type B	438002-1	438051-1	411-19313
5/5+2 row, Type B (19 columns)	438002-2	438051-4	411-19313
5/5+2 row, Type B (22 columns)	438002-3	438051-6	411-19313
5/5+2 row, Type C	438003-1	438051-2	411-19314
8/8+2 row, Type D	438051-2	438051-3	411-19432
8/8+2 row, Type E	439491-1	438051-3	411-19432
8/8+2 row, Type F	—	—	—
Type L	438001-1	438056-1	411-19315
L-MSC	438014-1	438056-1	411-19318
Type M	438001-1	438057-1	411-19316
M-MSC	438015-1	438057-1	411-19319
M-MSC reverse	438015-1	438057-1	411-19320
Type N	438003-1	438056-2	411-19317
Right Angle Females - Unshielded			
Type A	438031-1	438051-1	411-19324
Type B	438031-1	438051-1	411-19325
Type C	438032-1	438051-2	411-19326
Type L	438031-1	438052-1	411-19327
L-MSC	438070-1	438056-1	411-19330
Type M	438031-1	438054-1	411-19328
M-MSC	438072-1	438057-1	411-19331
M-MSC reverse	438071-1	438057-1	411-19332
Type N	438032-1	438052-2	411-19329
Right Angle Females - Shielded			
Type A (except TDM J4)	438036-1	438051-1	411-19334
Type A for TDM J4	1115335-1	438051-1	411-19334
Type B	436036-1	438051-1	411-19334
Type B (19 columns)	438036-2	438051-4	411-19437
Type B (22 columns)	438036-3	438051-6	411-19437
Type AB (19 columns)	438036-2	438051-4	411-19437
Type AB (22 columns)	438036-3	438051-6	411-19437
Type C	438037-1	438051-2	411-19437
Type D	439491-1	438051-7	411-19351
Type E	439491-1	438051-7	411-19434
Lower Shields			
Type A and B, Right Angle Female	438041-†	438053-1	411-19335
Type C and M, Right Angle Female	438042-†	438053-2	411-19352

Description	Part Numbers: Upper Insertion Tooling	Part Numbers: Support Tooling	Instruction Sheet Number
Right Angle Males			
Type A	438031-1	438051-1	411-19344
Type B	438031-1	438051-1	411-19345
Type B (22 columns)	438036-2	438051-4	411-19345
Type B (19 columns)	438036-3	438051-6	411-19345
Type C	438032-1	438051-2	411-19346
Vertical Females			
Type A	438076-1	438051-1	411-19377
Type B	438076-1	438051-1	411-19377
Type B (22 columns)	438076-1*	438051-4	411-19377
Type B (19 columns)	438076-1*	438051-6	411-19377
Type C	438077-1	438051-2	411-19377
Shrouds & Spacers			
Type A Shroud and Spacer	438001-1	438058-1	411-19337
Type B Shroud and Spacer	438002-1	438058-1	411-19338
Type B (19 column)	438002-3	438058-1*	411-19338
Type B (22 column)	438002-2	438058-1*	411-19338
Type B, One Piece Shroud	438002-1	438058-1	—
Type C Shroud and Spacer	438003-1	438058-1	411-19339
Type C, One Piece Shroud	438003-1	438058-1	—
EMI/RFI Shields			
EMI/RFI Right Angle Female, Upper	438036-1	438051-1	411-19334
EMI/RFI Right Angle Female, Lower	438041-†	438053-1	411-19335
EMI/RFI Right Angle Female, Closing	438023-1	438051-2	411-19336
EMI/RFI Vertical Male, Sides	438020-1	438051-1	411-19322
EMI/RFI Vertical Male, Closing	438021-1	438051-2	411-19323

† Part number suffix depends on application. See instruction sheet for details.
*Tool length exceeds connector length; check that tool does not interfere with other components.

Contact the Technical Support Center at 1-800-522-6752 if tooling is not indicated.

Quick Change Tooling Options:

1. SM-3 Pneumatic Machine 814700-2
2. SM-10 Electric/Hydraulic Machine 803880-6
3. Manual Arbor Frame 58024-1

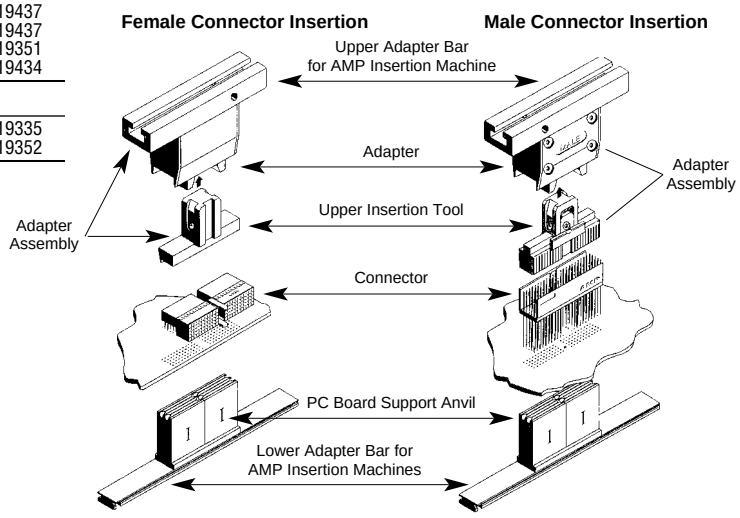

For complete product information, order Catalog 65911

Products for Industrial & Commercial Applications

Dimensions are shown for reference purposes only.

Dimensions are in inches and millimeters unless otherwise specified. Values in brackets are metric equivalents.

Specifications subject to change.

Technical Support Center
1-800-522-6752
www.tycoelectronics.com

Z-PACK 2mm HM Connector Insertion Tooling

There are two styles of connector insertion tooling available to suit different production needs.

- **Quick Change - inserts are attached to the insertion machine**
- **"Flat Rock" - tools are fitted to the connector and are suitable for multiple connector insertion when used with a high force insertion machine**

All insertion machines can be supplied to suit local power supply conditions. The manual hand tool is recommended for repair tasks.

Quick Change
This tooling is designed so that it can be fitted to the machines. These tools allow the sequential fitting of connectors to the board by selection of the appropriate inserts. Fitting to other types of machines is possible by selecting adapters without the upper and lower adapter bars.

ICIM (Intelligent Connector Insertion Machine)
Part Number 67941-□

- Capacity of 27 500 N [6180 lb] with 5 bar air supply
- Force and stroke control (compensates for printed circuit board thickness)
- Fitted with an inhibitor (detects if the X-Y table is not aligned correctly)
- Detects faulty connector insertion
- X-Y tables optional
- Actual dash (-) number depends on voltage needed
- See catalog 889943 for more details

Pneumatic Insertion Machine
Part Number 677420-1

- Controllable insertion force from 0.5- 25 000 N [.1-5620 lb]
- 250 mm [9.843] throat depth
- Moveable lower tool holder
- Manual X-Y table with adjustable stops
- Recommended for high volume production of backplanes and daughter cards
- See catalog 889943 for more details

Pneumatic Insertion Machine (with circuit board support platform)
Part Number 677427-2

- Similar to Pneumatic Insertion Machine Part Number 677420-1 (above)
- X-Y table replaced with a circuit board support platform
- See catalog 889943 for more details

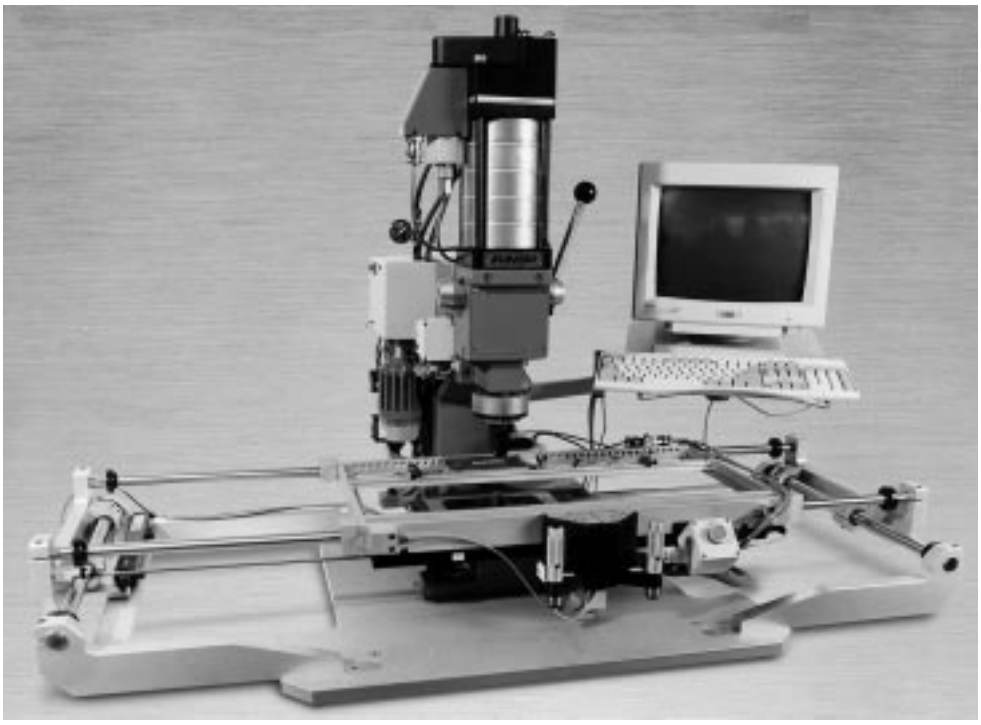

ICIM (Intelligent Connector Insertion Machine)



Hand Tool

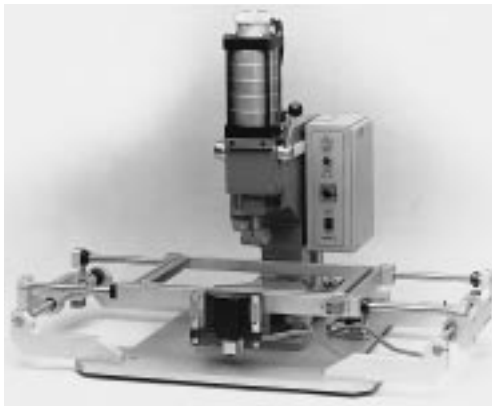

Pneumatic Insertion Machine

Manual Hand Tool
Part Number 677430-2

- Insertion force 15 000 N [3370 lb]
- 125mm [4.921] throat depth
- Fixed lower tooling and board support
- Low volume production
- Prototyping
- Use with repair tools



Pneumatic Insertion Machine (with Circuit Board Support Platform)

For complete product information, order Catalog 65911

Products for Industrial & Commercial Applications

Dimensions are shown for reference purposes only.

Dimensions are in inches and millimeters unless otherwise specified. Values in brackets are metric equivalents.

Specifications subject to change.

Technical Support Center
1-800-522-6752
www.tycoelectronics.com

Product Facts

- **High-density connections; four-row and five-row, 2mm x 2mm circuit grid**
- **Modular design for signal and power connections**
- **Compatible to International Specifications IEC61076-4-0X(48B) and EIA SP3179**
- **Choice of solder leads or compliant press-fit leads**
- **Bellcore approved (Contact Tyco Electronics for specific part numbers)**
- **Recognized under the Component Program of Underwriters Laboratories Inc., File No. E28476**
- **Certified by Canadian Standards Association, File No. LR7189**
- **Current Rating at 70°C Continuous Signal Contacts: 1A, Power Contacts: 4.6A**

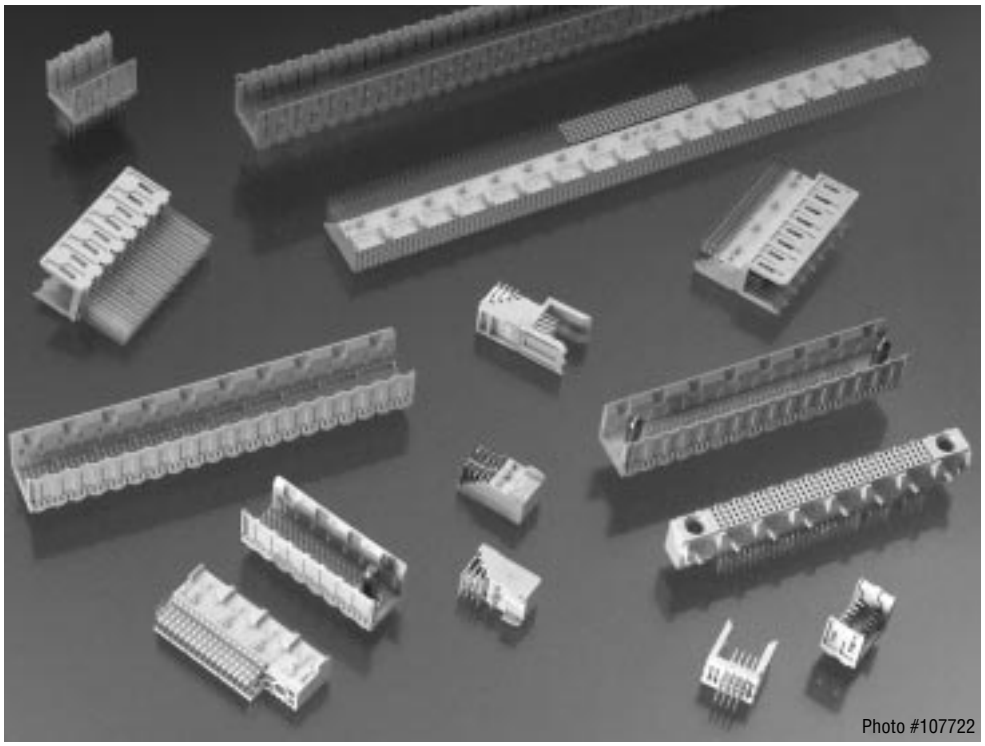

Photo #107722

Material Specification:

Liquid Crystal Polymer — per ASTM D5138 LCP000 G30A 32250 UL94V-0 Rated

Phosphor Bronze — per uns Alloy No. C51100

Gold — per MIL-G-45204, Type I, Grade C

Tin-Lead — per MIL-P-81728

Nickel — per QQ-N-290, Class 2

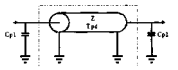

AMP Single Line and Multi Line Models, and Electrical Performance Reports are available for Z-PACK 2mm FutureBus+ connectors at www.amp.com/simulation, or by requesting CD#1307568.

The AMP Z-PACK 2mm FB two-piece connector system uses a modular concept and a 2mm contact pitch to provide high-density, high-speed signal and power connections for FutureBus+ and FutureBus+ "like" applications. These versatile connectors are designed to meet the requirements of International Specification IEC61076-4-0X(48B) with applications that include networking and telecommunications equipment.

Signal and power modules are available in pin and receptacle assemblies with a choice of either solder leads or compliant press-fit leads. Compliant press-fit leads offer fast, solderless application to printed circuit boards. Pin and receptacle housings are made of a high temperature liquid crystal polymer. Contacts are duplex plated gold on the mating surfaces and tin-lead on the leads for performance and reliability. The signal modules are end-to-end stackable, providing 88 signal lines per cm [50.8 signal lines per inch].

Signal pin and receptacle modules are available in position sizes of 24 through 264 in increments of 24 positions for 4 row. Sizes of 30 through 330 in increments of 30 position for 5 row. Power pin and receptacle modules are available in an 8-position size with compatible footprints for 4 row. Available in a 10 position size with compatible footprints for 5 row. Signal and power modules are available in integrally molded Monoblock configurations for added versatility.

Press-Fit Contact/PC Board Applications

Connector (Contact) Type	Press-Fit Contact		Drilled Hole Diameter	Plating Thicknesses		Plated-Through Hole Diameter	Radial Hole Distortion	
	Minimum Board Thickness	Material Thickness		Copper[1]	Tin-Lead		Average	Maximum
Receptacle Assemblies	**1.30** .051	**0.355** .014	**0.81-0.86** .032-.034	**0.025** .0010 Min.	**0.015** .0006 Max.	**0.65-0.80** .026-.031	**0.038** .001	**0.05** .002
Pin Assemblies	**2.40** .094	**0.50** .020	**0.81-0.86** .032-.034	**0.025** .0010 Min.	**0.015** .0006 Max.	**0.65-0.80** .026-.031	**0.038** .001	**0.05** .002

[1] Maximum hardness of copper layer is 150 Knoop

For complete product information, order Catalog 65358

Products for Industrial & Commercial Applications

Dimensions are shown for reference purposes only.

Dimensions are in inches and millimeters unless otherwise specified. Values in brackets are metric equivalents.

Specifications subject to change.

Technical Support Center
1-800-522-6752
www.tycoelectronics.com

Product Specifications describe technical performance characteristics and verification tests. They are intended for the Design, Component and Quality Engineer.

108-1441 Connector, Z-PACK 2mm FutureBus+, Signal and Power

Application Specification describes the requirements for using the product in its intended application. It is intended for the Packaging and Design Engineer and the set-up person.

114-1075 Z-PACK 2mm FutureBus+ Receptacle and Pin Header Connectors.

Instruction Sheets provide instructions for assembling or applying the product. They are intended for the Manufacturing Assembler or Operator.

408-4157 AMP Vertical Power Contact Header Connector Seating Tool, 58512-[ ]

408-4038 PC Board Support Fixtures 679980-1, -2 for AMP Z-PACK 2mm FutureBus+ and Z-PACK 2mm HM Receptacle Tooling.

408-4166 Shunted Signal Header Seating Tool for Z-PACK 2mm FutureBus+ Connectors

408-4250 Signal Header Seating Tool for 5 Row Z-PACK 2mm FutureBus+ Connectors 318860-[ ]

- **Low applied cost and inexpensive tooling**
- **Cold hold feature eliminates heat staking and problems associated with heat staking**
- **Housing extends over the back of the connector protecting the leads during shipping, handling, and assembly**
- **Leads are stamped to shape versus bent to shape, giving excellent structural strength**
- **Compliant pin lead option can be used to apply connectors on surface mount cards, eliminating an additional soldering operation**
- **A secondary housing or tooling is not needed to insert the compliant pin contacts.**
- **Lead organizers are an integral part of the connector body**
- **Leads held into true position of .2mm for ease of insertion into boards**
- **Lead organizer enhances the rigidity of the leads**
- **Organizer can not dislodge from the connector**

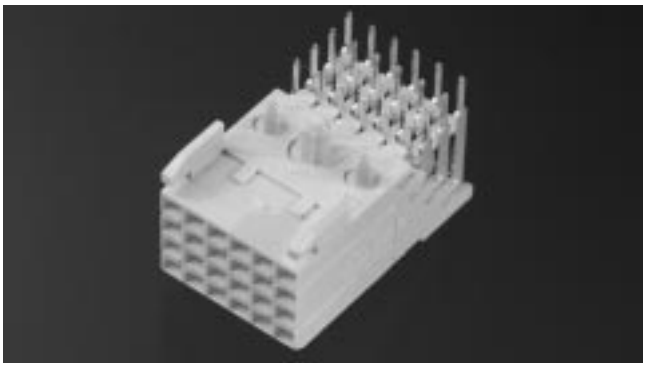

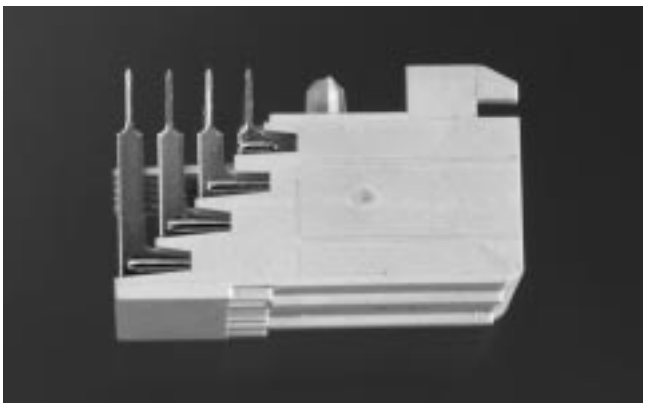

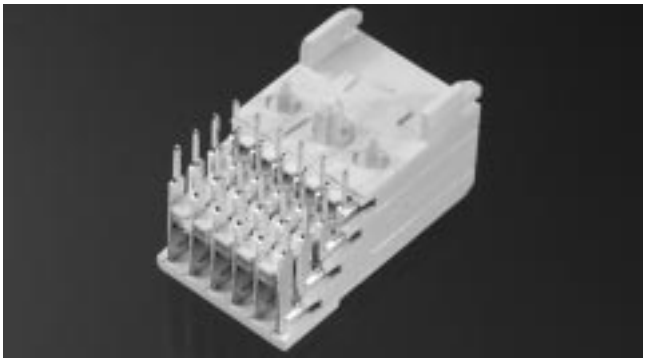

408-6927 Design Recommendations for Printed Circuit Board Support Fixture.

408-9910 AMP Seating Tool 58511-[] for Z-PACK 2mm FutureBus+ Pin Headers with Compliant Lead Contacts

408-9979 Pin Repair Kit 354687-1 for Z-PACK 2mm HM and FB Pin Contacts

Electrical Performance Reports contain abstracts of the results of various computer simulations of electrical interconnection performance. They are intended for the Electrical and Design Engineer.

65476 Z-PACK 2mm FutureBus+ Connector (2mm Centerline, Four-Row, Right Angle Receptacle, Through-Hole Mount)

1242176 Z-PACK 2mm FutureBus+ Connector (2mm Centerline, Five-Row, Right Angle Receptacle, Through-Hole Mount)

For complete product information, order Catalog 65358

4 Row Signal Modules, Vertical Pin Assemblies, Fixed-Board Connector, 2mm x 2mm Circuit Grid

16mm Wide Body Pin Assemblies with Solder Leads and Compliant Press-Fit Leads

Material and Finish:

Housing — Liquid crystal polymer

Pin Contacts — Phosphor bronze, duplex plated gold 0.0008 min. on mating surface, 0.0038 min. tin-lead on solder lead, with entire contact underplated 0.0013 nickel

Related Product Data:

Material Specifications — page 3049

Compliant Press-Fit Contact Specifications — page 3049

Application Tooling — page 3057

Technical Documents:

Product Specification
108-1441

Application Specification
114-1075

Electrical Performance Report
65476

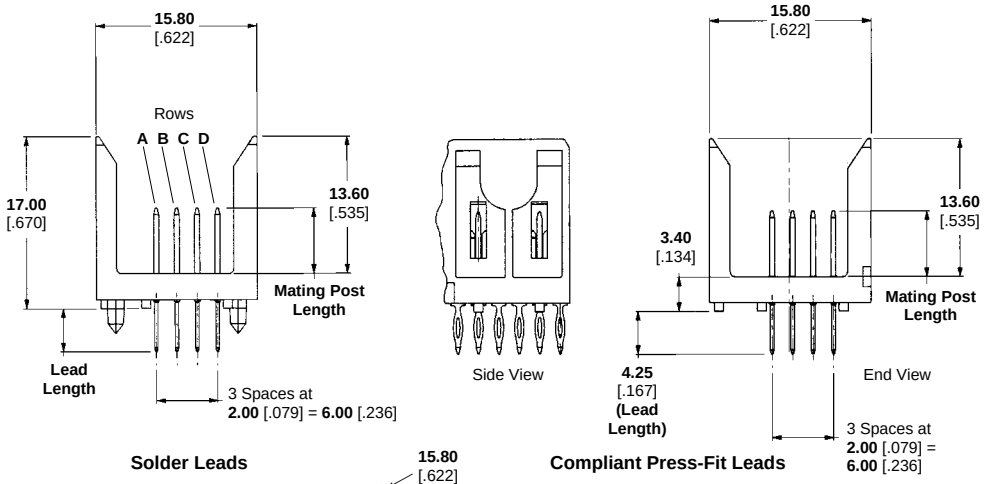

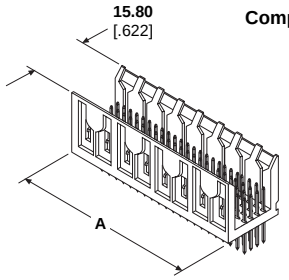

Vertical Pin Assemblies with Solder Leads

No. of Positions	Dimension A	Part Numbers					
		Solder Lead Length of 4.25 [.167] Mating Post Lengths				Solder Lead Length of 3.20 [.126] Mating Post Length 6.50 [.256]	Seating Tooling
		5.00 [.197]	5.75 [.226]	6.50 [.256]	7.25 [.285]		
24	**11.88** 0.468	536513-1	536549-1	536501-1	—	536536-1	58511-1
48	**23.88** 0.940	536513-2	536549-2	536501-2	536551-2	536536-2	58511-2
72	**35.88** 1.413	—	—	1-536501-1	—	—	1-58511-4
96	**47.88** 1.885	536513-3	—	536501-3	—	536536-3	58511-3
120	**59.88** 2.357	—	—	536501-6	—	—	58511-6
144	**71.88** 2.830	536513-5	—	536501-5	—	—	58511-5
168	**83.88** 3.302	—	—	536501-7	—	—	58511-7
192	**95.88** 3.775	536513-4	—	536501-4	536551-4	536536-4	58511-4
216	**107.88** 4.247	—	—	536501-9	—	—	58511-8
240	**119.88** 4.720	—	—	536501-8	—	—	58511-9
264	**131.88** 5.192	—	—	1-536501-0	—	—	1-58511-0

Vertical Pin Assemblies with Press-Fit Leads

No. of Positions	Dimension A	Part Numbers					
		Lead Length of 4.25 [.167] Mating Post Lengths					Seating Tooling
		5.00 [.197]	5.75 [.226]	6.50 [.256]	7.25 [.285]	8.00 [.315]	
24	**11.88** 0.468	536514-1	536524-9	536504-1	536542-1	536515-1	58511-1
48	**23.88** 0.940	536514-2	536524-2	536504-2	536542-2	536515-2	58511-2
72	**35.88** 1.413	—	—	1-536504-2	—	—	1-58511-4
96	**47.88** 1.885	536514-3	536524-3	536504-3	536542-3	536515-3	58511-3
120	**59.88** 2.357	536514-6	—	536504-6	536542-6	—	58511-6
144	**71.88** 2.830	536514-5	—	536504-8	—	—	58511-5
168	**83.88** 3.302	—	—	536504-5	—	—	58511-7
192	**95.88** 3.775	536514-4	536524-4	536504-4	536542-4	536515-4	58511-4
216	**107.88** 4.247	—	—	1-536504-0	—	—	58511-8
240	**119.88** 4.720	—	536524-1	536504-9	—	—	58511-9
264	**131.88** 5.192	—	—	1-536504-1	—	—	1-58511-0

For complete product information, order Catalog 65358

Products for Industrial & Commercial Applications
Dimensions are shown for reference purposes only.
Dimensions are in inches and millimeters unless otherwise specified. Values in brackets are metric equivalents.
Specifications subject to change.
Technical Support Center 1-800-522-6752 www.tycoelectronics.com

5 Row Signal Modules, Vertical Pin Assemblies, Fixed-Board Connector, 2mm x 2mm Circuit Grid

18mm Wide Body Pin Assemblies with Solder Leads and Compliant Press-Fit Leads

Material and Finish:

Housing — Liquid crystal polymer

Pin Contacts — Phosphor bronze, duplex plated 0.0008 min. gold on mating surface, 0.0038 min. tin-lead on solder lead, with entire contact underplated 0.0013 nickel

Related Product Data:

Material Specifications — page 3049

Compliant Press-Fit Contact Specifications — page 3049

Application Tooling — page 3057

Technical Documents:

Product Specification
108-1441

Application Specification
114-1075

Electrical Performance Report
1242176

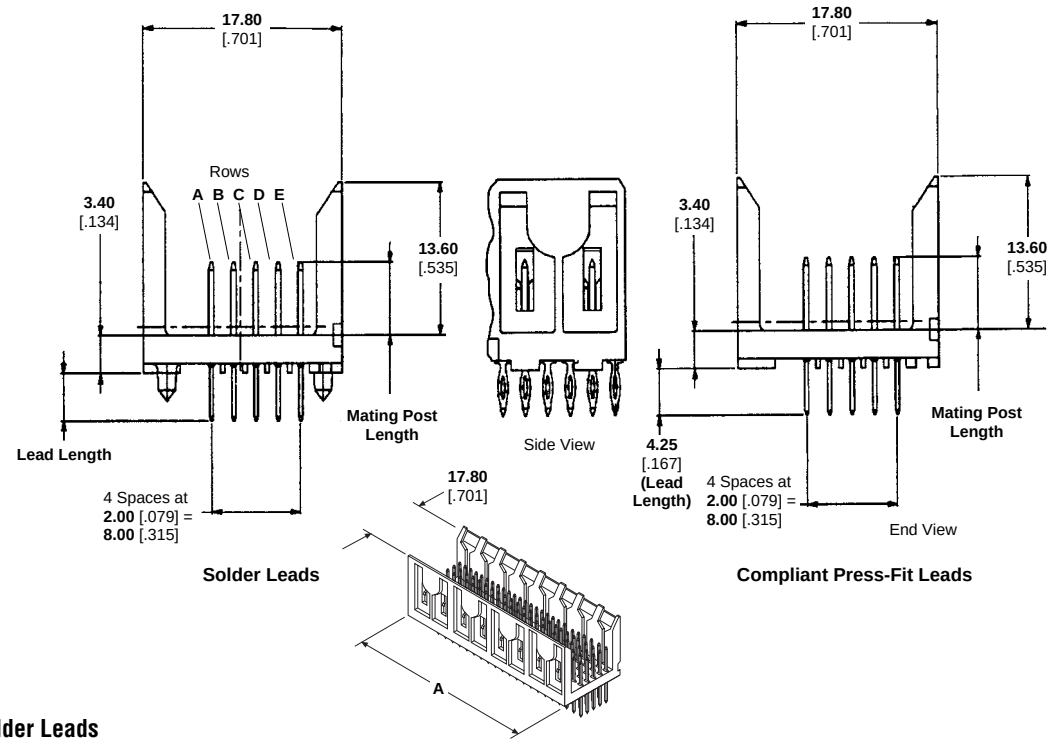

Vertical Pin Assemblies with Solder Leads

No. of Positions	Dimension A	Part Numbers: Solder Lead Length of 4.25 [.167] Mating Post Lengths 5.00 [.197]	Part Numbers: Solder Lead Length of 4.25 [.167] Mating Post Lengths 6.50 [.256]	Part Numbers: Solder Lead Length of 3.20 [.126] Mating Post Length 5.00 [.197]	Seating Tooling
30	**11.88** 0.468	223010-1	223000-1	223013-1	318860-1
60	**23.88** 0.940	223010-2	223000-2	223013-2	318860-2
90	**35.88** 1.413	—	223000-3	—	318860-3
120	**47.88** 1.885	223010-4	223000-4	223013-4	318860-4
150	**59.88** 2.357	—	223000-5	—	318860-5
180	**71.88** 2.830	—	223000-6	—	318860-6
210	**83.88** 3.302	—	223000-7	223013-7	318860-7
240	**95.88** 3.775	223010-8	223000-8	223013-8	318860-8
270	**107.88** 4.247	—	223000-9	—	318860-9
300	**119.88** 4.720	—	1-223000-0	1-223013-0	1-318860-0
330	**131.88** 5.192	—	1-223000-1	1-223013-1	1-318860-1

Vertical Pin Assemblies with Press-Fit Leads

No. of Positions	Dimension A	Part Numbers: Lead Length of 4.25 [.167] Mating Post Lengths 5.00 [.197]	5.75 [.226]	6.50 [.256]	7.25 [.285]	8.00 [.315]	Seating Tooling
30	**11.88** 0.468	223011-1	223016-1	223002-1	223017-1	223018-1	318860-1
60	**23.88** 0.940	223011-2	223016-2	223002-2	223017-2	223018-2	318860-2
90	**35.88** 1.413	—	—	223002-3	—	—	318860-3
120	**47.88** 1.885	223011-4	223016-4	223002-4	223017-4	223018-4	318860-4
150	**59.88** 2.357	—	—	223002-5	—	—	318860-5
180	**71.88** 2.830	—	—	223002-6	—	—	318860-6
210	**83.88** 3.302	—	—	223002-7	—	—	318860-7
240	**95.88** 3.775	223011-8	223016-8	223002-8	223017-8	223018-8	318860-8
270	**107.88** 4.247	—	—	223002-9	—	—	318860-9
300	**119.88** 4.720	—	—	1-223002-0	—	—	1-318860-0
330	**131.88** 5.192	—	—	1-223002-1	—	—	1-318860-1

For complete product information, order Catalog 65358

Products for Industrial & Commercial Applications

Dimensions are shown for reference purposes only.

Dimensions are in inches and millimeters unless otherwise specified. Values in brackets are metric equivalents.

Specifications subject to change.

Technical Support Center
1-800-522-6752
www.tycoelectronics.com

4 Row Signal Modules, Right Angle Receptacle Assemblies, Free-Board Connector, 2mm x 2mm Circuit Grid

Receptacle Assemblies with Solder Leads and Compliant Press-Fit Leads

Material and Finish:

Housing — Liquid crystal polymer

Receptacle Contacts — Copper alloy 18C, duplex plated 0.0008 min. gold on mating surface, 0.0038 min. tin-lead on solder lead, with entire contact underplated 0.0013 nickel

Related Product Data:

Material Specifications — page 3049

Compliant Press-Fit Contact Specifications — page 3049

Application Tooling — page 3057

Technical Documents:

Product Specification
108-1441

Application Specification
114-1075

Instruction Sheets
408-6927, 408-9910, 408-9979

Electrical Performance Report
65476

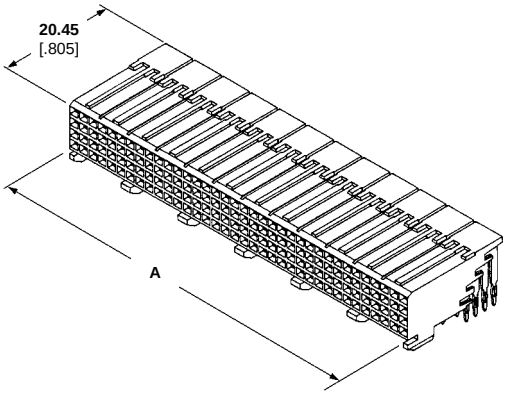

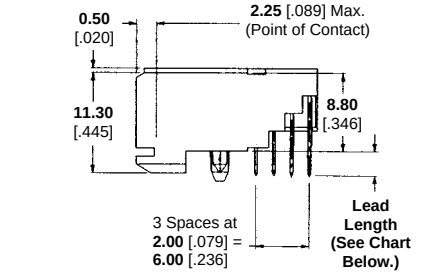

Solder Leads

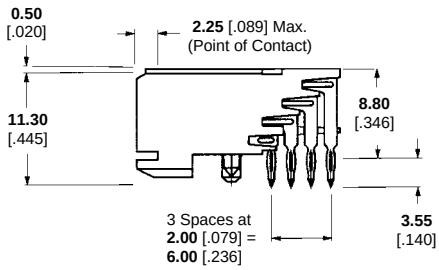

Compliant Press-Fit Leads

Receptacle Assembly

No. of Positions	Dimension A	Part Numbers with Solder Leads 2.73 [.107] Lead Length	Part Numbers with Solder Leads 3.53 [.139] Lead Length	Part Numbers with Press-Fit Leads	Seating Tooling
24	**11.88** 0.468	536507-1	536510-1	536511-1	
48	**23.88** 0.940	536507-2	536510-2	536511-2	
72	**35.88** 1.413	1-536507-1	—	1-536511-2	
96	**47.88** 1.885	536507-3	536510-3	536511-3	
120	**59.88** 2.357	536507-6	536510-6	536511-6	Industry
144	**71.88** 2.830	536507-7	536510-5	536511-5	Standard
168	**83.88** 3.302	536507-5	536510-7	536511-8	Flat Rock
192	**95.88** 3.775	536507-4	536510-4	536511-4	
216	**107.88** 4.247	536507-9	536510-9	1-536511-0	
240	**119.88** 4.720	536507-8	536510-8	536511-9	
264	**131.88** 5.192	1-536507-0	1-536510-0	1-536511-1	

Note: Consult Tyco Electronics for additional sizes.

5 Row Signal Modules, Right Angle Receptacle Assemblies, Free-Board Connector, 2mm x 2mm Circuit Grid

Receptacle Assemblies with Solder Leads and Compliant Press-Fit Leads

Material and Finish:

Housing — Liquid crystal polymer

Receptacle Contacts — Copper alloy 18C, duplex plated 0.0008 min. gold on mating surface, 0.0038 min. tin-lead on solder lead, with entire contact underplated 0.0013 nickel

Related Product Data:

Material Specifications — page 3049

Compliant Press-Fit Contact Specifications — page 3049

Application Tooling — page 3057

Technical Documents:

Product Specification
108-1441

Application Specification
114-1075

Instruction Sheets
408-6927, 408-9910, 408-9979

Electrical Performance Report
1242176

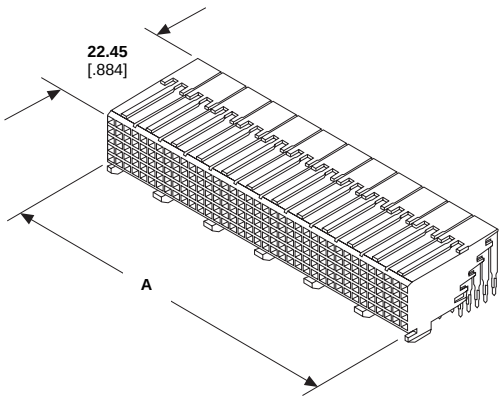

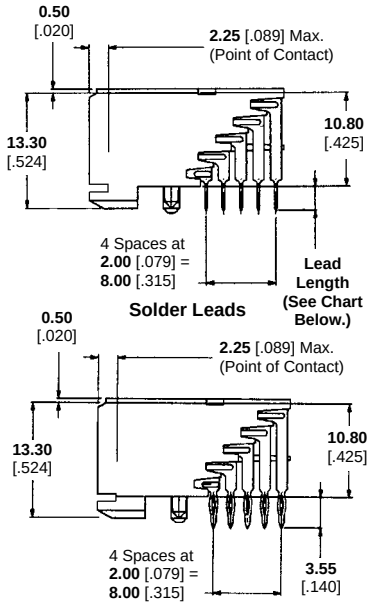

Receptacle Assembly

No. of Positions	Dimension A	Part Numbers with Solder Leads 2.73 [.107] Lead Length	Part Numbers with Solder Leads 3.53 [.139] Lead Length	Part Numbers with Press-Fit Leads	Seating Tooling
30	**11.88** .468	223004-1	223007-1	223008-1	
60	**23.88** .940	223004-2	223007-2	223008-2	
90	**35.88** 1.413	223004-3	223007-3	223008-3	
120	**47.88** 1.885	223004-4	223007-4	223008-4	
150	**59.88** 2.357	223004-5	223007-5	223008-5	Industry
180	**71.88** 2.830	223004-6	223007-6	223008-6	Standard
210	**83.88** 3.302	223004-7	223007-7	223008-7	Flat Rock
240	**95.88** 3.775	223004-8	223007-8	223008-8	
270	**107.88** 4.247	223004-9	223007-9	223008-9	
300	**119.88** 4.720	1-223004-0	1-223007-0	1-223008-0	
330	**131.88** 5.192	1-223004-1	1-223007-1	1-223008-1	

Note: Consult Tyco Electronics for additional sizes.

4 Row Power Modules, Vertical Pin Assemblies, Fixed Board Connector, 2mm x 2mm Circuit Grid

4 Row 16mm Wide Body Pin Assemblies with Solder Leads and Compliant Press-Fit Leads (8 Positions)

Material and Finish:

Housing — Liquid crystal polymer
Pin Contacts — Phosphor bronze, duplex plated 0.0008 min. gold on mating surface, 0.0038 min. tin-lead on solder lead, with entire contact underplated 0.0013 nickel

Related Product Data:

Material Specifications — page 3049
Compliant Press-Fit Contact Specifications — page 3049
Application Tooling — page 3057

Technical Documents:

Product Specification
108-1441
Application Specification
114-1075
Instruction Sheets
408-6927, 408-9910, 408-9979, 408-4158
Electrical Performance Report
65476-4 Row
1242176-5 Row

Sequenced Power Pin Assemblies

Part Number 536606
Part Number 536619
Part Number 536621
Part Number 536622
Part Number 536627

Notes: Refer to customer drawing for specific loading patterns and part numbers. Other sequence patterns may be available.

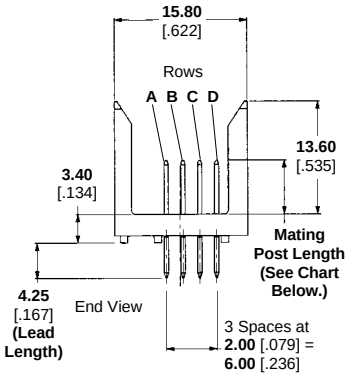

Compliant Press-Fit Leads

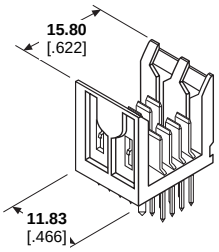

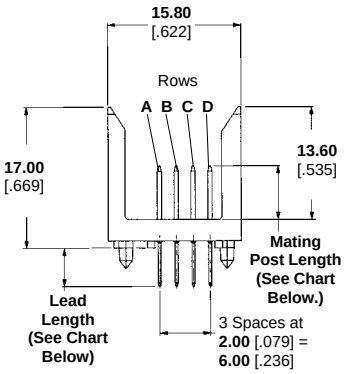

Solder Leads

No. of Positions	Mating Post Lengths A	B	C	D	Vertical Pin Assembly Part Numbers 4.25 [.167] Solder Leads	3.2 [.126] Solder Leads	4.25 [.167] Press-Fit Leads	Seating Tooling
8	**6.50** .256	**6.50** .256	**6.50** .256	**6.50** .256	536600-1	536628-1	536603-1	58512-1
	7.25 .285	**7.25** .285	**7.25** .285	**7.25** .285	536625-1	—	—	
	8.00 .315	**8.00** .315	**8.00** .315	**8.00** .315	536623-1	—	536620-1	

Note: Seating Tooling applicable to all 8 position power headers.

5 Row Power Modules, Vertical Pin Assemblies, Fixed Board Connector, 2mm x 2mm Circuit Grid

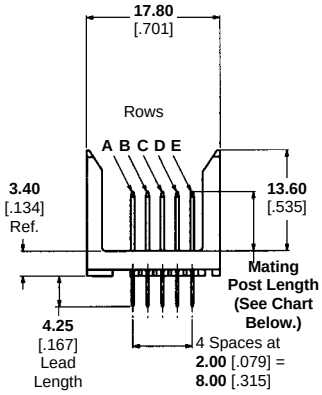

Compliant Press-Fit Leads

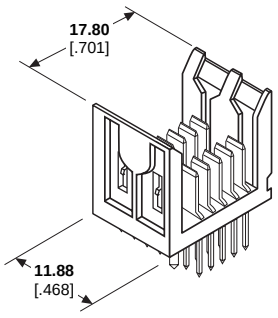

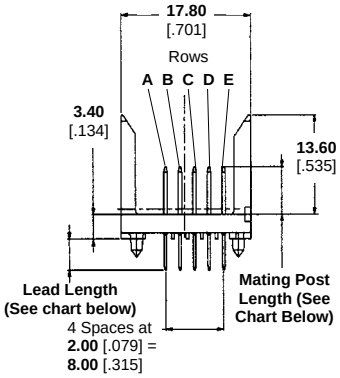

Solder Leads

5 Row 18mm Wide Body Pin Assemblies with Solder Leads and Compliant Press-Fit Leads (10 Positions)

Vertical Pin Assembly

No. of Positions	Mating Post Length	Part Numbers 2.73 [.107] Solder Leads	3.53 [.139] Solder Leads	4.25 [.167] Press-Fit Leads	Seating Tooling
10	**6.50** .256	223092-1	223093-1	536642-1	1214224-1

Note: Seating Tooling applicable to all 10 position power headers.

For complete product information, order Catalog 65358

Products for Industrial & Commercial Applications
Dimensions are shown for reference purposes only.
Dimensions are in inches and millimeters unless otherwise specified. Values in brackets are metric equivalents.
Specifications subject to change.
Technical Support Center 1-800-522-6752 www.tycoelectronics.com

4 Row Power Modules, Right Angle Receptacle Assemblies, Free-Board Connector, 2mm x 2mm Circuit Grid

4 Row Receptacle Assemblies with Solder Leads and Compliant Press-Fit Leads (8 Positions)

Material and Finish:

Housing — Liquid crystal polymer

Receptacle Contacts — Phosphor bronze, duplex plated 0.0008 min. gold on mating surface, 0.0038 min. tin-lead on solder lead, with entire contact underplated 0.0013 nickel

Related Product Data:

Material Specifications — page 3049
Compliant Press-Fit Contact Specifications — page 3049
Application Tooling — page 3057

Technical Documents:

Product Specification
108-1441
Application Specification
114-1075
Instruction Sheets
408-6927, 408-9910, 408-9979
Electrical Performance Reports
65476-4 Row
1242176-5 Row

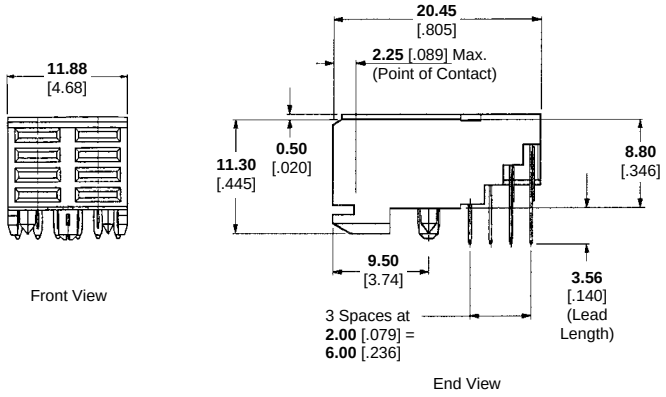

Receptacle Assembly

No. of Positions	Part Numbers			Seating Tooling
	with Solder Leads		with Press-Fit Leads	
	2.73 [.107] Lead Length	3.53 [.139] Lead Length	3.56 [.140] Lead Length	
8	536607-1	536613-1	536614-1	Industry Standard Flat Rock

5 Row Power Modules, Right Angle Receptacle Assemblies, Free-Board Connector, 2mm x 2mm Circuit Grid

5 Row Receptacle Assemblies with Solder Leads and Compliant Press-Fit Leads (10 Positions)

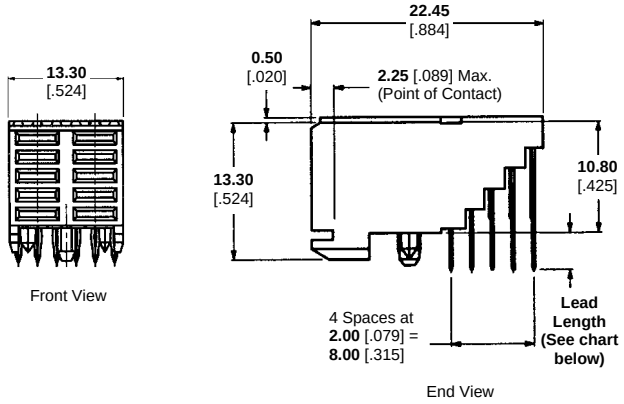

Receptacle Assembly

No. of Positions	Part Numbers			Seating Tooling
	with Solder Leads		with Press-Fit Leads	
	2.73 [.107] Lead Length	3.53 [.139] Lead Length	3.56 [.140] Lead Length	
10	223092-1	223093-1	536649-1	Industry Standard Flat Rock

For complete product information, order Catalog 65358

Products for Industrial & Commercial Applications
Dimensions are shown for reference purposes only.
Dimensions are in inches and millimeters unless otherwise specified. Values in brackets are metric equivalents.
Specifications subject to change.
Technical Support Center 1-800-522-6752 www.tycoelectronics.com

Application Tooling for Vertical Pin Assemblies with Compliant Press-Fit Leads (Signal and Power Modules)

Vertical pin assemblies use compliant lead contacts to allow fast, solderless backplane construction through reliable press-fit application.

Press-fitting these connectors to PC boards requires special seating tools that transfer the application force directly to the contacts.

Receptacle Tooling:
A customer supplied tool, or an AMP arbor tool or pneumatic machine with a flat bearing surface is needed to push both the "Cold Hold" feature and Press-Fit contacts into printed circuit boards. Bottom support tooling is available to support the leads and "COLD HOLD" feature that extend through the printed circuit board:

Instruction Sheet
408-4038

Board support fixtures are used to support PC boards or backplanes while connectors are being assembled to the boards or backplanes. AMP Instruction Sheet No. 408-6927 provides Tyco Electronics recommendations for manufacturing board support fixtures.

Pin Contact Replacement Kit:
354687-1

Instruction Sheet 408-9979

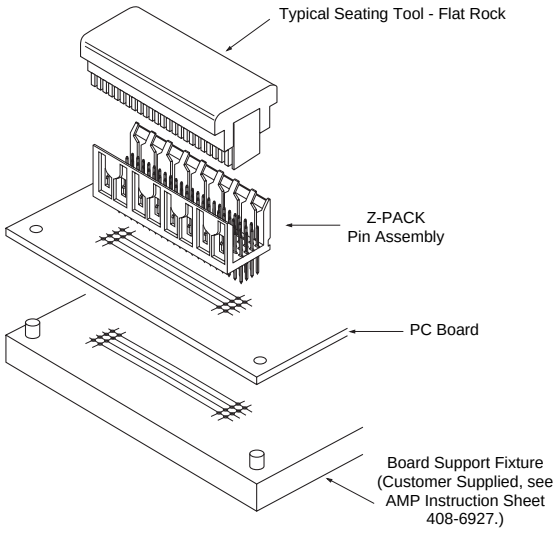

Part Number	Description
679980-1	Fixture for up to 230 wide board
679980-2	Fixture for up to 460 board
679977-1	Bottom support anvil—12.7 long
679977-2	Bottom support anvil—49.2 long



4 Row Pin Assembly

Seating Tools

Signal Module

Part Number	Position
58511-1	24
58511-2	48
58511-3	96
58511-4	192
58511-5	144
58511-6	120
58511-7	168
58511-8	216
58511-9	240
1-58511-0	264
1-58511-4	72

Instruction Sheet
408-9910

Power Module

Part Number	Position
58512-1	8
58512-2	16

Instruction Sheet
408-4157

5 Row Pin Assembly

Seating Tools

Signal Module

Part Number	Position
318860-1	30
318860-2	60
318860-3	90
318860-4	120
318860-5	150
318860-6	180
318860-7	210
318860-8	240
318860-9	270
1-318860-0	300
1-318860-1	330

Instruction Sheet
408-4250

Power Module

Part Number	Position
1214224-1	10

Instruction Sheet
408-4488

Insertion Machine (Seating Machine) Options:

1. SM-3 Pneumatic Machine 814700-2
2. SM-10 Electric/Hydraulic Machine 803880-6
3. Manual Arbor Frame 58024-1

For complete product information, order Catalog 65358

Products for Industrial & Commercial Applications

Dimensions are shown for reference purposes only.

Dimensions are in inches and millimeters unless otherwise specified. Values in brackets are metric equivalents.

Specifications subject to change.

Technical Support Center
1-800-522-6752
www.tycoelectronics.com

Product Facts

- **High performance system with backplane and cable interconnects**
- **Superior electrical performance down to 250 picosecond rise times**
- **System speeds to 2.5 Gbps**
- **Stripline technology for controlled impedance**
- **40 high-speed signal lines per inch**
- **High density; signal pins not used as ground reference**
- **Receptacle contact leads blanked at 45° angles to minimize skew**
- **Modular design with 60 and 80 position modules; one-piece molded housings in sizes of 100 to 280 positions**
- **Receptacle modules preassembled to stiffener for modular design**
- **Compatible with current board manufacturing techniques**
- **Sequencing of ground, power and signal contacts**
- **Electrical spice simulation and mechanical models available**



Z-PACK Stripline 100 connectors have an integral ground plane between each column of contacts to provide the controlled impedance that makes them ideal for high performance systems with edge speeds as fast as 250 picoseconds. Four rows of 0.38 [.015] square posts on 2.54 x 2.54 [.100 x .100] centerlines provide 40 high speed signal lines per inch. No signal lines have to be assigned as ground reference, enabling the connectors to maximize the number of signal lines per unit area.

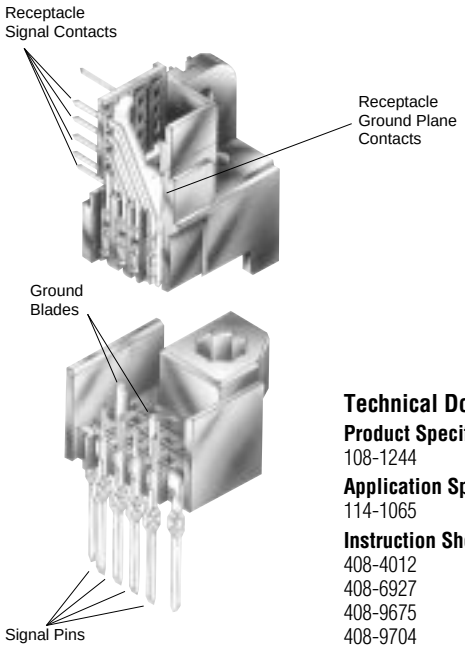

Technical Documents:

Product Specification
108-1244

Application Specification
114-1065

Instruction Sheets
408-4012
408-6927
408-9675
408-9704
408-9709

Electrical Performance Report
82353

Material and Finish:

Housing and Organizer — Liquid crystal polymer, black

Stiffener — Aluminum

Contacts (All) — Phosphor bronze; duplex plated gold flash over 0.00076 [.000030] min. palladium-nickel in mating area, 0.00381 [.000150] min. tin-lead on leads, with entire contact underplated 0.00127 [.000050] min. nickel

Performance Specifications:

Mating Force — 0.83 N [3.0 oz], avg. per contact

Unmating Force — 0.11 N [.4 oz], min. per contact

Normal Force — 50 grams min., end-of-life

Wipe — 2.54 [.100] with 4.45 [.175] post

Resistance:

Signal Contacts — 20 milliohms max.

Power/Ground Contacts — 10 milliohms max.

Operating Temperature — -65°C to +125°C

Current Rating:

Signal Contacts — 1.0 ampere continuous (fully derated)

Power/Ground Contacts — 2.5 amperes.

Durability — Tested to 250 cycles

For complete product information, order Catalog 65194

Products for Industrial & Commercial Applications

Dimensions are shown for reference purposes only.

Dimensions are in inches and millimeters unless otherwise specified. Values in brackets are metric equivalents.

Specifications subject to change.

Technical Support Center
1-800-522-6752
www.tycoelectronics.com

Z-PACK Stripline 100 connectors offer a system solution for daughtercard-to-backplane, card extender/co-planar, and high speed cable-to-backplane applications.

As the product name applies, Z-PACK Stripline 100 connectors employ stripline technology within a board-to-board interconnect providing excellent electrical performance and interconnection density. The design has been optimized with extensive electrical simulation and mechanical modeling. Ears on the pin connectors and extended ears on the receptacle connectors provide .050 [1.27] lead-in and guidance. Guide pins, power pins and keys also are available for use in the connector ears.



The discretely molded version is available in sizes of 100 through 280 positions.



The modular version, used for larger size connectors (120 through 820 positions), employs receptacle modules preassembled on an aluminum stiffener. The stiffener can be screwed down to the daughtercard adding rigidity. Modules can be selectively loaded on the stiffener to allow for clearance on the backplane. Pin modules then are press fitted into the backplane to match the mating receptacle.



Right-angle pin assemblies are available in sizes of 120 through 820 positions. These connectors are ideal for card extender and co-planar applications.

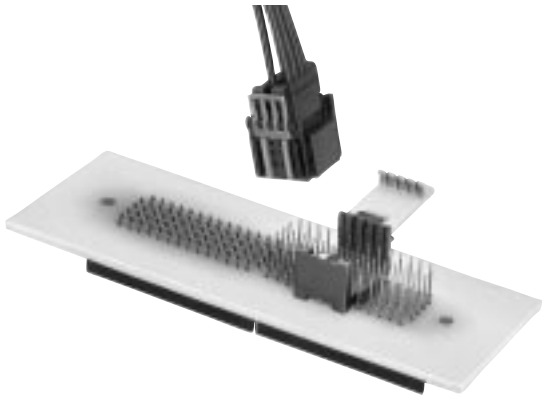

High performance cable assemblies utilize a stripline construction similar to the board-to-board product, providing a high speed interconnect from the daughtercard through the backplane through the cabling.

Electrical Analysis

Z-PACK Stripline 100 connectors provide excellent high speed performance for risetimes down to 250 picoseconds. Ground planes between columns of contacts provide:

- Controlled impedance
- Low inductance ground return paths for common mode noise protection
- Cross talk protection
- Power distribution

The solder leads of receptacle contacts are blanked at angles to minimize propagation delay and skew between different rows. The daughtercard pattern is 2.54 [.100] column-to-column and 1.91 [.075] row-to-row to reduce the electrical path to the connector.

SINGLE-LINE models are circuit representations of the electrical performance of a single pin contact of a pinfield when a realistic number of other pin contacts of the field are assigned as a signal return or reference conductors. The resistance, inductance, capacitance, impedance and propagation delay values are shown at the right. These models can be made available on floppy disks.

Our unique MULTI-LINE models are circuit representations of a multiplicity of connector pin contacts. These models allow the user to assign functions to any pin in the grouping, allowing circuit designers to find the optimum pinning assignments. For the results of various computer simulations using these models, order AMP Electrical Performance Report No. 82353. Also, for additional information on these models, consult Tyco Electronics.

For complete product information, order Catalog 65194

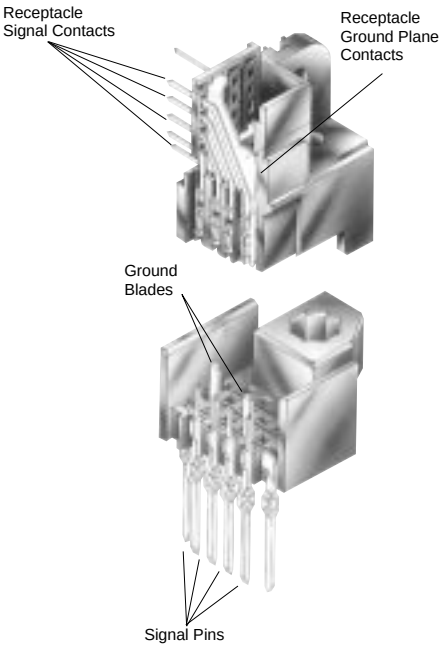

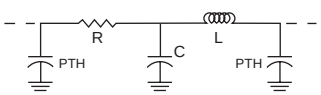

Lumped Constant Circuit Model

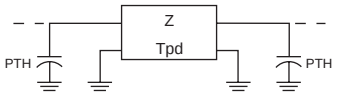

Distributed Constant Circuit Model

	R (Milliohms)	L (nH)	C (pF)
A	6.3	6.8	2.3
B	7.0	8.1	2.4
C	9.1	9.3	2.5
D	10.5	9.7	2.6

Z (Ohms)	Tpd (pS)
55	80
58	90
61	110
61	120

Reference Plane Return Inductance, 1.5 Nanohenries

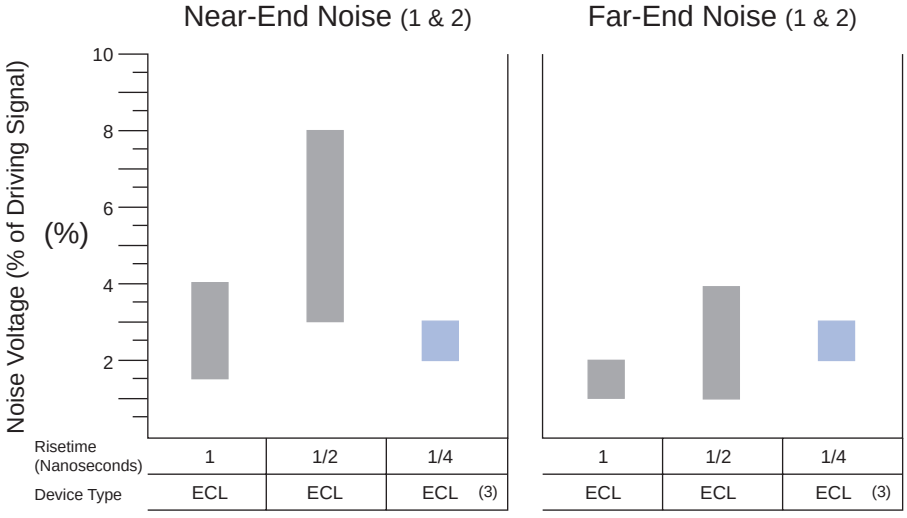

(1) Simultaneous Multiple Source Switching
(2) Includes Common Mode Noise
(3) Differential Pairs

Products for Industrial & Commercial Applications

Dimensions are shown for reference purposes only.

Dimensions are in inches and millimeters unless otherwise specified. Values in brackets are metric equivalents.

Specifications subject to change.

Technical Support Center
1-800-522-6752
www.tycoelectronics.com

Discretely Molded Receptacle Assemblies

Related Product Data:

Material and Finish — page 3058
Performance Specifications — page 3058
Mating Pin Assemblies — page 3062
Accessories — page 3066

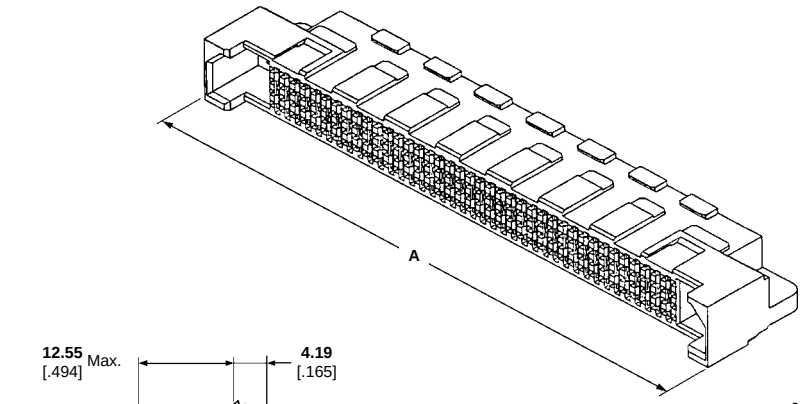

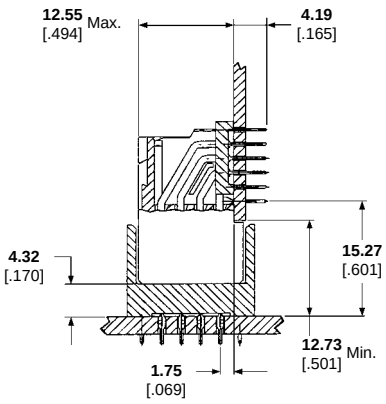

Mated Cross-Section (Receptacle and Vertical Pin Assemblies)

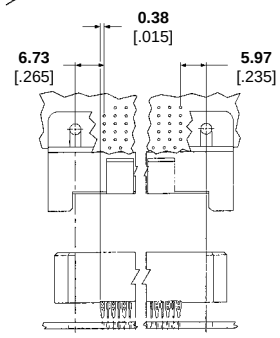

Thru-Hole Offset for Mating Receptacle and Vertical Pin Assemblies

Receptacle Assembly Part Numbers — 4.19 [.165] Solder Leads

No. of Positions	Dimensions			Part Numbers
	A	B	C	
60	**60.96** 2.400	**48.26** 1.900	**35.56** 1.400	646243-1
100	**86.36** 3.400	**73.66** 2.900	**60.96** 2.400	646243-2
140	**111.76** 4.400	**99.06** 3.900	**86.36** 3.400	646243-3
160	**124.46** 4.900	**111.76** 4.400	**99.06** 3.900	646243-8
180	**137.16** 5.400	**124.46** 4.900	**111.76** 4.400	646243-4
220	**162.56** 6.400	**149.86** 5.900	**137.16** 5.400	646243-5
240	**175.26** 6.900	**162.56** 6.400	**149.86** 5.900	646243-6
280	**200.66** 7.900	**187.96** 7.400	**175.26** 6.900	646243-7

Discretely Molded Pin Assemblies

Related Product Data:

Material and Finish — page 3058
Performance Specifications — page 3058
Mating Receptacle Assemblies — page 3061
Accessories — page 3066
Application Tooling — page 3067

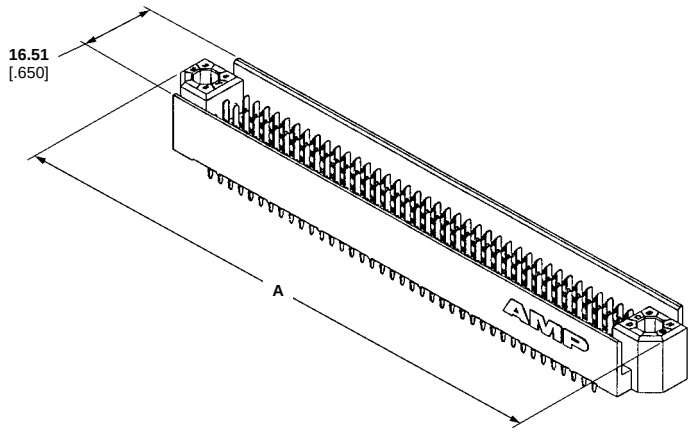

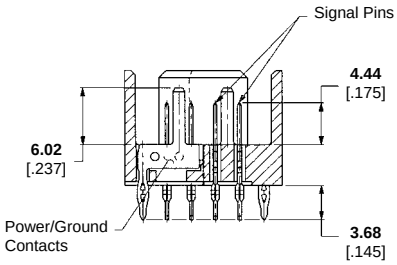

ACTION PIN Contact Leads

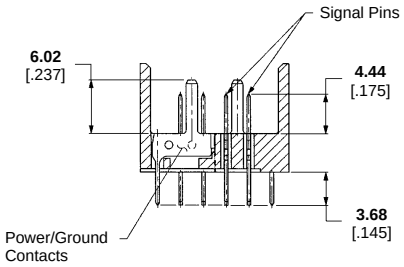

Solder Leads

Pin Assembly Part Numbers — 3.68 [.145] ACTION PIN Contact and Solder Leads

No. of Positions	Dimensions A	Part Numbers	
		ACTION PIN Contact Leads	Solder Leads
100	**83.31** 3.280	646244-2	646245-2
140	**108.71** 4.280	646244-3	646245-3
180	**134.11** 5.280	646244-4	646245-4
220	**159.51** 6.280	—	646245-5
240	**172.21** 6.780	646244-6	646245-6
280	**197.61** 7.780	—	646245-7

Modular Receptacle Assemblies

Receptacle assemblies and right-angle pin headers come preassembled with end and center modules loaded onto an aluminum stiffener. This aluminum stiffener also can be used to minimize board warpage and bow. The position of the solder leads is managed by use of an organizer, which is part of the assembly.

Modular vertical pin headers, available in 60 and 80 position center and end modules, are combined into the number of contacts needed to mate with the receptacle assemblies. The orientation of modules, both size and position, must be identical for both pin and receptacle assemblies for proper mating since ground/power planes are not in place at the seams where modules are stacked. The contacts in pin assemblies are offered with ACTION PIN press-fit leads or solder leads. The ACTION PIN leads require a 1.57 [.062] thick PC board or larger and are pressed into a 0.94/1.09 [.037/.043] finished hole.

A through-hole offset exists between the motherboard and daughtercard. While mounting holes between boards are in line, there is a 0.38 [.015] offset between through holes in the daughtercard and motherboard. See illustration at right for dimensions.

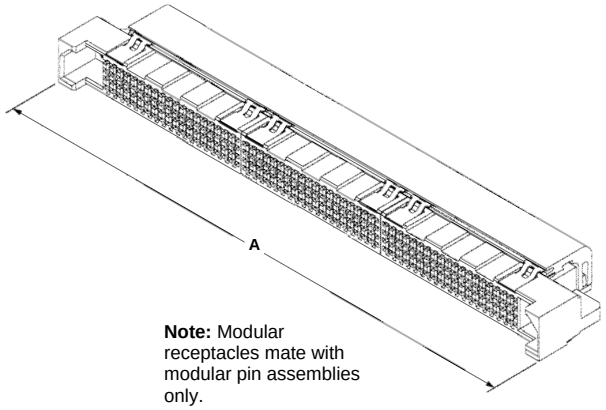

Note: Modular receptacles mate with modular pin assemblies only.

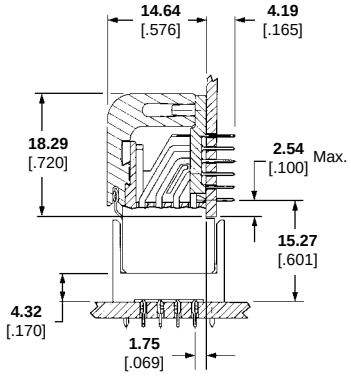

Mated Cross-Section (Receptacle and Vertical Pin Assemblies)

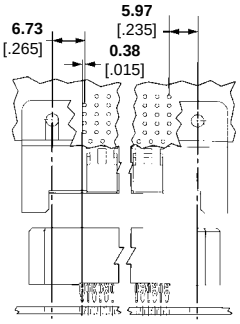

Thru-Hole Offset for Mating Receptacle and Vertical Pin Assemblies

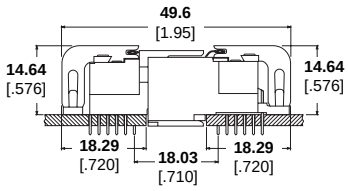

Mated Receptacle and Right-Angle Pin Assemblies

Related Product Data:

Material and Finish — page 3058
Performance Specifications — page 3058
Mating Pin Assemblies — pages 3064, 3065
Accessories — page 3066

Receptacle Assembly Part Numbers – 4.19 [.165] Solder Lead Length

No. of Positions*	Dimensions A	Part Numbers
120	**99.06** 3.900	3-646236-1
140	**111.76** 4.400	3-646236-5
160	**124.46** 4.900	3-646236-2
180	**137.16** 5.400	3-646236-6
200	**149.86** 5.900	3-646236-3
220	**162.56** 6.400	3-646236-4
240	**175.26** 6.900	646236-1
260	**187.96** 7.400	646236-2 646661-1[1]
280	**200.56** 7.900	646236-3
300	**213.36** 8.400	646236-4

No. of Positions*	Dimensions A	Part Numbers
340	**238.76** 9.400	646236-6
360	**251.46** 9.900	646236-7
380	**264.16** 10.400	646236-8
400	**276.86** 10.900	646236-9
460	**314.96** 12.400	1-646236-2
480	**327.66** 12.900	1-646236-3
520	**353.06** 13.900	1-646236-5
600	**403.86** 15.900	1-646236-9
620	**416.56** 16.400	2-646236-0
640	**429.26** 16.900	2-646236-1
700	**467.36** 18.400	2-646236-4

*Other sizes and styles can be made available, consult Tyco Electronics.
[1]Part number 646661-1 has **4.95** [.195] solder lead length.

For complete product information, order Catalog 65194

Products for Industrial & Commercial Applications
Dimensions are shown for reference purposes only.
Dimensions are in inches and millimeters unless otherwise specified. Values in brackets are metric equivalents.
Specifications subject to change.
Technical Support Center
1-800-522-6752
www.tycoelectronics.com

Modular Vertical Pin Assemblies with ACTION PIN Thin Stock Contacts

3.68 [.145] Lead Length

Related Product Data:

Material and Finish — page 3058
Performance Specifications — page 3058
Mating Receptacles — page 3063
Accessories — page 3066
Application Tooling — page 3067

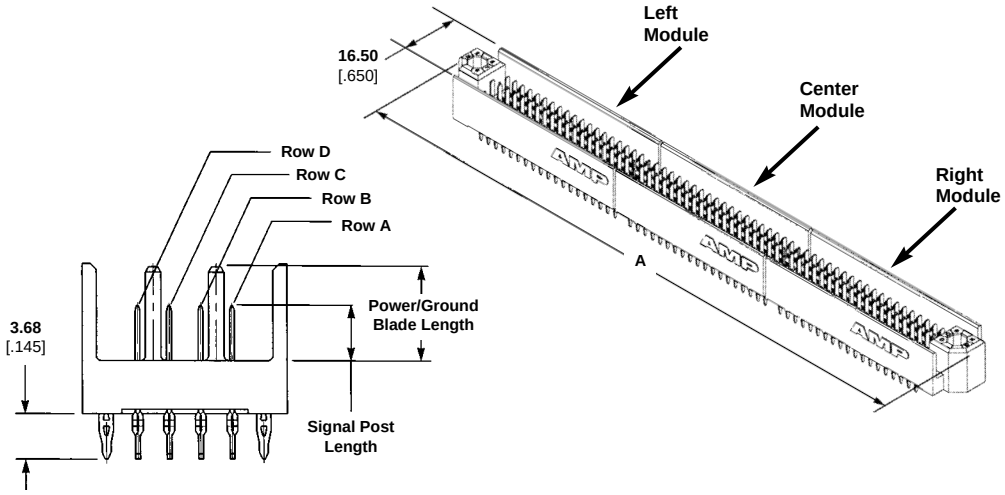

ACTION PIN

Signal Post Length		Power/Ground Blade Length	Module Selection					
			Left Module		Center Module		Right Module	
Rows B&C	Rows A&D		60 Pos.	80 Pos.	60 Pos.	80 Pos.	60 Pos.	80 Pos.
4.45 .175	**4.45** .175	**6.02** .237	646239-1	646239-2	646238-1	646238-2	646237-1	646237-2
Solder Leads								
3.68 .145	**3.68** .145	**6.02** .237	646242-1	646242-2	646241-1	646241-2	646240-1	646240-2

No. of Positions	Dimensions A		Number of Modules Required (Listed Above)					
120	**96.01**	3.78	1				1	
140	**108.71**	4.28		1			1	
160	**121.41**	4.78		1				1
180	**134.11**	5.28	1		1		1	
200	**146.81**	5.78	1			1	1	
220	**159.51**	6.28	1		1	1		
240	**172.21**	6.78		1		1		1
260	**184.91**	7.28		1	2		1	
280	**197.61**	7.78		1	2			1
300	**210.31**	8.28	1			2		1
320	**223.01**	8.78		1		2		1
340	**235.71**	9.28		1	3			1
360	**248.41**	9.78	1			3	1	
380	**261.11**	10.28		1		3	1	
400	**273.81**	10.78		1		3		1
420	**286.51**	11.28	1		5		1	
440	**299.21**	11.78	1			4	1	
460	**311.91**	12.28		1		4	1	
480	**324.61**	12.78		1		4		1
500	**337.31**	13.28		1	6		1	
520	**350.01**	13.78	1			5	1	
540	**362.71**	14.28		1		5	1	
560	**375.41**	14.78		1		5		1
580	**388.11**	15.28		1	7			1
600	**400.81**	15.78	1			6	1	
620	**413.51**	16.28		1		6	1	
640	**426.21**	16.78		1		6		1
660	**438.91**	17.28	1		9		1	
680	**451.61**	17.78	1			7	1	
700	**464.31**	18.28		1		7	1	
720	**477.01**	18.78		1		7		1
740	**489.71**	19.28		1	10		1	
760	**502.41**	19.78	1			8	1	
780	**515.11**	20.28		1		8	1	
800	**527.81**	20.78		1		8		1
820	**540.51**	21.28		1	11			1

Note: Sequencing available upon request.

For complete product information, order Catalog 65194

Modular Right-Angle Pin Assemblies with Solder Lead Contacts

**4.19 [.165]
Lead Length**

Related Product Data:

Material and Finish — page 3058
Performance Specifications — page 3058
Mating Receptacles — page 3063
Accessories — page 3066

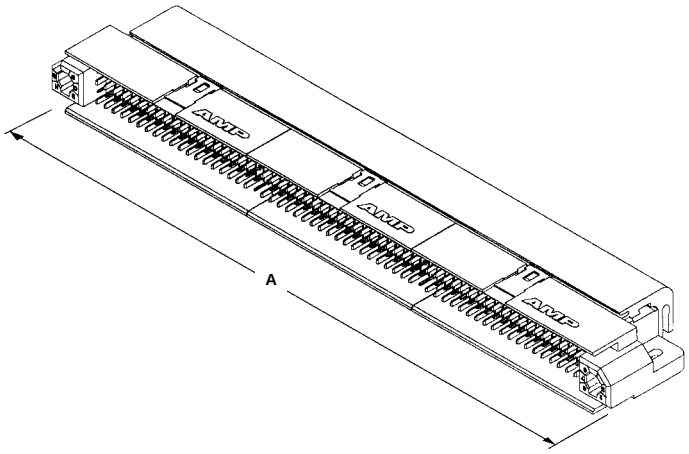

**Right-Angle Pin Assembly Part Numbers —
4.19 [.165] Solder Lead Length**

No. of Positions*	Dimensions A	Part Numbers
160	**121.41** 4.78	3-646166-2
180	**134.11** 5.28	3-646166-6
200	**146.81** 5.78	3-646166-3
240	**172.21** 6.78	646166-1
300	**210.31** 8.28	646166-4
340	**235.71** 9.28	646166-6
360	**248.41** 9.78	646166-7
600	**400.81** 15.78	1-646166-9
640	**426.21** 16.78	2-646166-1

* Other sizes can be made available, consult Tyco Electronics.

Power and Keying Hardware and Applications

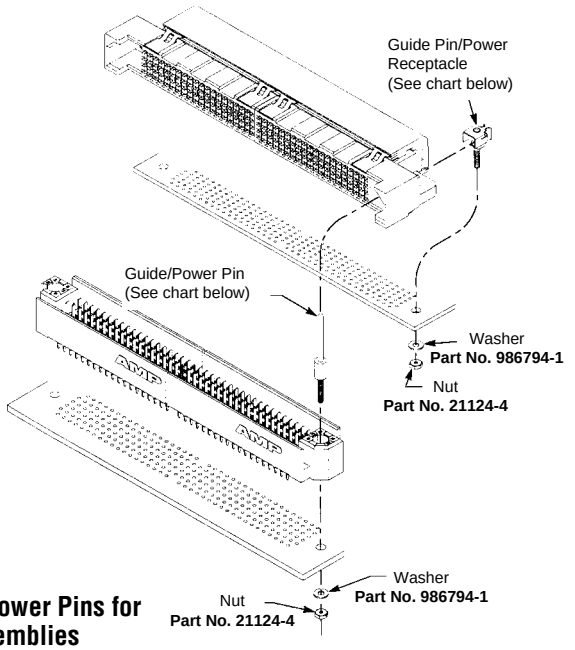

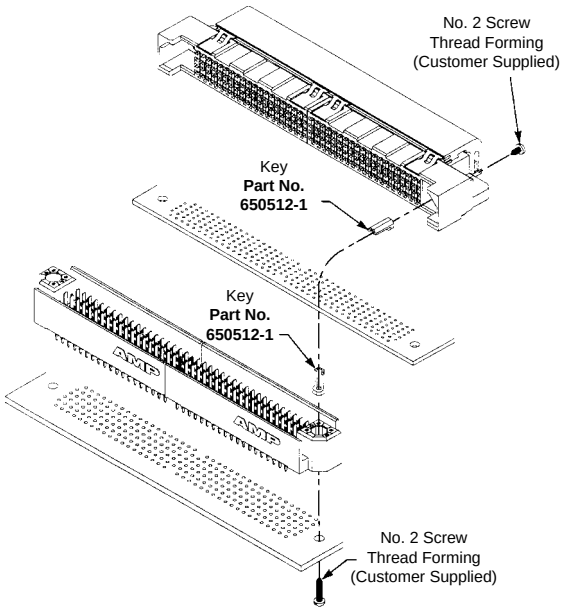

Guide/Power Pins for Pin Assemblies

Material and Finish:

Brass, plated as follows:

A — 0.00076 [.000030] gold over 0.00127 [.000050] min. nickel

B — 0.00127 (.000050] gold over 0.00127 [.000050] min. nickel

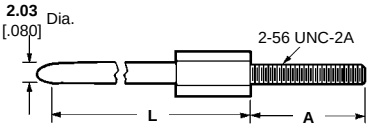

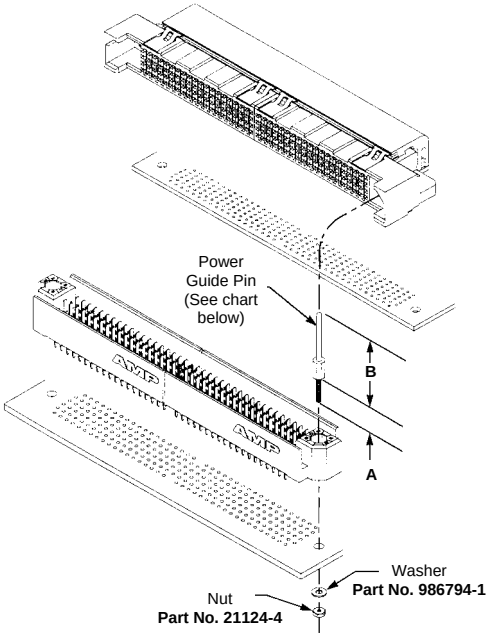

Dimensions		Finish	Part Numbers
A	L		
9.52 .375	26.04 1.025	None	533082-1
	30.35 1.195	None	533082-2
	26.04 1.025	A	533082-3
	30.35 1.195	A	533082-4
12.06 .475	30.35 1.195	A	533082-6
		None	533082-7
12.06 .475	26.04 1.025	None	533082-8
		A	533082-9
14.22 .560	26.04 1.025	None	1-533082-0
		A	1-533082-1

Guide Pin/Power Receptacle for Receptacle Assemblies

Material and Finish:

Brass, plated 0.00076 [.000030] gold in contact area and gold flash on remainder, with entire contact underplated 0.00127 [.000050] min. nickel

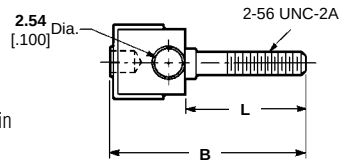

Dimensions		Part Numbers
B	L	
17.22 .678	10.80 .425	532924-1
14.68 .578	8.26 .325	532924-3
13.67 .538	7.25 .285	532924-4

For complete product information, order Catalog 65194

Application Tooling for Pin Assemblies with ACTION PIN Contacts

Z-PACK pin assemblies use ACTION PIN contacts to allow fast, solderless backplane construction through reliable press-fit application. Press-fitting connectors to PC boards requires special seating tools that transfer application force directly to the contacts.

Force applied to the tool to seat the connectors can be provided in several ways, although the high pin counts of Z-PACK connectors typically require power applicators such as AMP Seating Machine BMEP-3T (**Part Number** 1399400-1), BMEP-5T (**Part Number** 1399401-1), MEP-6T (**Part Number** 1399500-1), or MEP-12T (**Part Number** 1399501-1).

There are also commercially available arbor presses such as Greenerd 3A or 3B with a seating capacity of 178 N [40 lbs.] per contact.

Board support fixtures are used to support PC boards or backplanes while connectors are being assembled to the boards or backplanes. AMP Instruction Sheet No. 408-6927 provides Tyco Electronics recommendations for manufacturing board support fixtures.

For more tooling information, call the Technical Support Center **1-800-522-6752.**

Pin Assembly Seating Tools

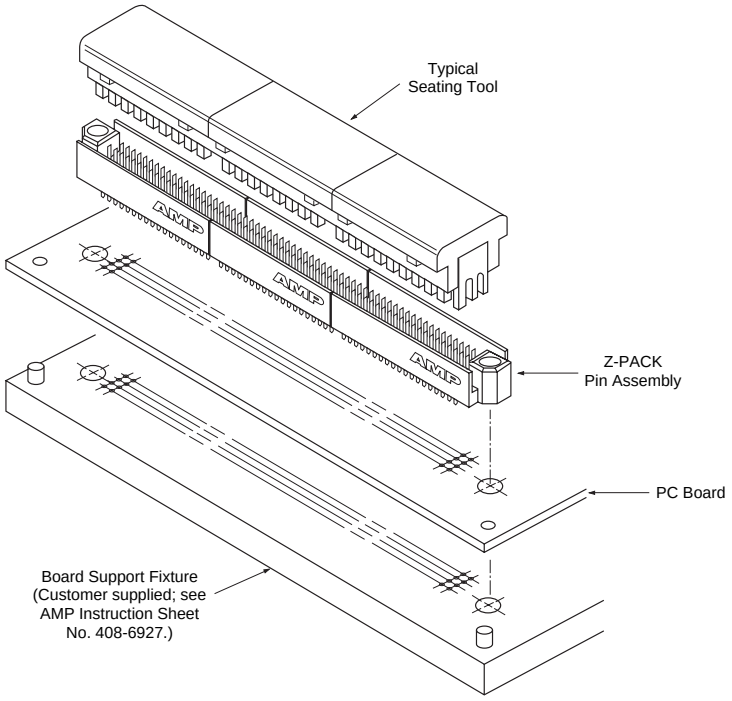

Connector Size (No. of Positions)	Seating Tool Numbers
60	854423-1
80	854423-2
100	*
140	**
180	854423-4
240	854423-6

* Consult Tyco Electronics
** Consult Tyco Electronics or use 854423-1

Repair Tooling



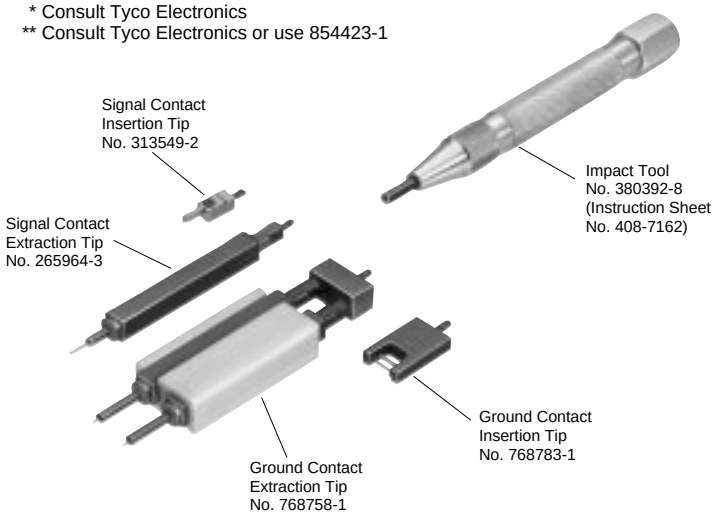

Receptacle Assembly Fastener Repair Tool Kit No. 854904-1

This kit is used to insert and remove locking clips from Z-PACK Stripline 100 receptacle assemblies when modules are in need of repair or replacement. See AMP Instruction Sheet No. 408-9704 for detailed instructions.

Pin Assembly Contact Repair Tool Kit No. 768784-1

This kit is used to repair both signal and power ground contacts in Z-PACK Stripline 100 pin assemblies. See AMP Instruction Sheet No. 408-4012 for details.

Product Facts

- **High pin count—through 684 positions**
- **Four areas of contact per connection**
- **Available with ACTION PIN contacts and solder posts on pin assemblies**
- **Pin assemblies available with both vertical and right angle posts**
- **Inserts into standard .100 [2.54] grid**
- **Keying system provides 64 combinations without loss of contact count**
- **High temperature material permits vapor phase reflow soldering**
- **Low mating forces**
- **Highly economical for quality and density**
- **Recognized under the Component Program of Underwriters Laboratories Inc. File No. E28476**
- **Certified by Canadian Standards Association File No. LR 7189**

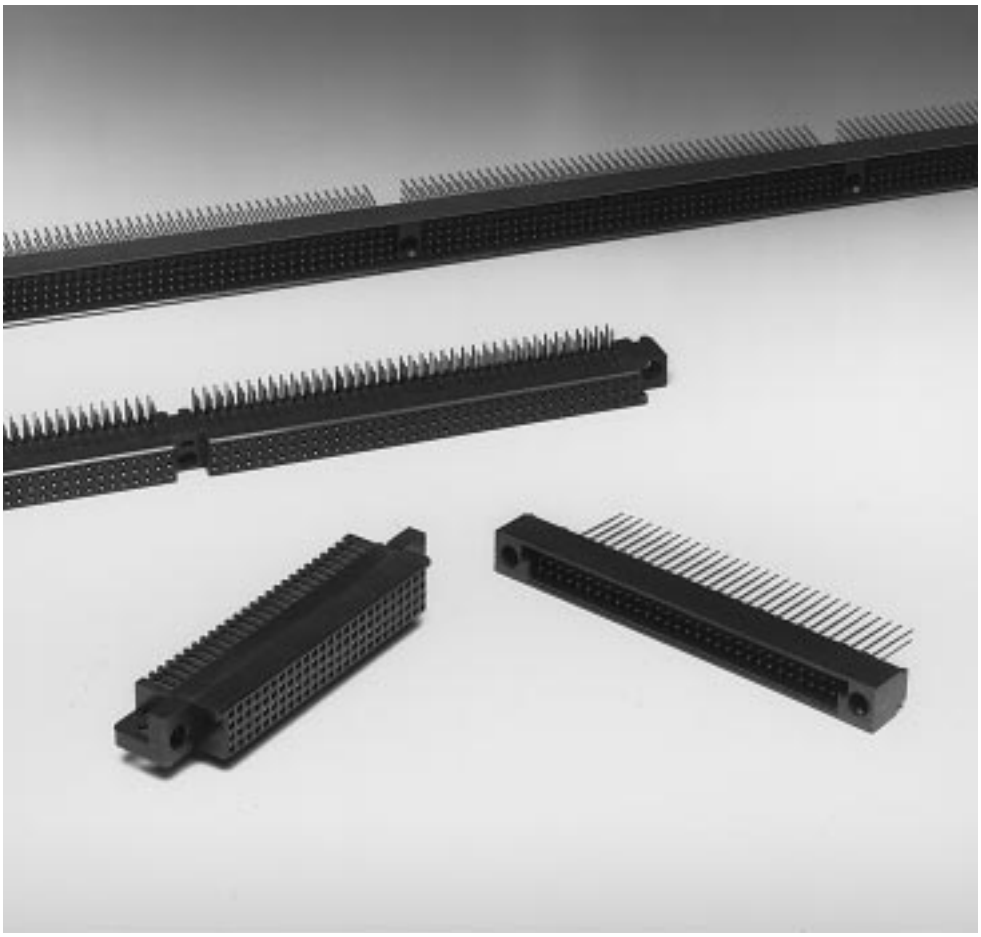

AMP-HDI connectors define the state-of-the-art for high pin count, two-piece printed circuit board connectors. They are available with two, three or four rows of contacts on a .100 [2.54] grid, totaling a maximum of 684 positions.

Complementing high density, the required PC board hole sizes and patterns allow space-efficient circuitry layout. Box-type, quad redundant receptacle contacts with select gold plating in the contact area deliver high reliability while maintaining low mating force which makes possible the mating of such large connectors.

Center guide pins facilitate reliable mating of long connectors. In addition, contact and housing configurations prevent pin damage if a long connector is “peeled” apart from one end.

Features such as press fit pin headers with ACTION PIN contacts; four-point, box-type receptacle contacts; 64-combination keying; and high-temperature housing materials add to the appeal of AMP-HDI connectors.

These connectors are highly specialized products for applications demanding their unusual characteristics and are military qualified to MIL-C-55302/173 thru 181.

Consult Tyco Electronics for the appropriate AMP part numbers-to-military part numbers.

For complete product information, order Catalog 82618

Products for Industrial & Commercial Applications

Dimensions are shown for reference purposes only.

Dimensions are in inches and millimeters unless otherwise specified. Values in brackets are metric equivalents.

Specifications subject to change.

Technical Support Center
1-800-522-6752
www.tycoelectronics.com

Four-Row Pin Assemblies Without Guide Holes

Vertical Posts

Material and Finish:

Housing—Brown glass-filled polyphenylene sulfide

Contacts—Phosphor bronze, plated as follows:

A .000030 [0.00076] gold in contact area; tin on posts, with entire contact underplated .000050-.000100 [0.00127-0.00254] nickel

B Gold flash over .000050-.000100 [0.00127-0.00254] nickel on entire contact, with .000030 [0.00076] gold in contact area and for .200 [5.08] from tip of wrap-type post

Related Product Data:

Mateable Connectors—page 3070

Guide/Power Pins—pages 3075, 3076

Application Tooling—page 3077

Technical Documents:

Product Specification
108-9063, 108-16

Application Specification
114-9008

Instruction Sheets
408-2636, 408-6626, 408-6909, 408-6927, 408-9007, 408-9038, 408-9142, 408-9185

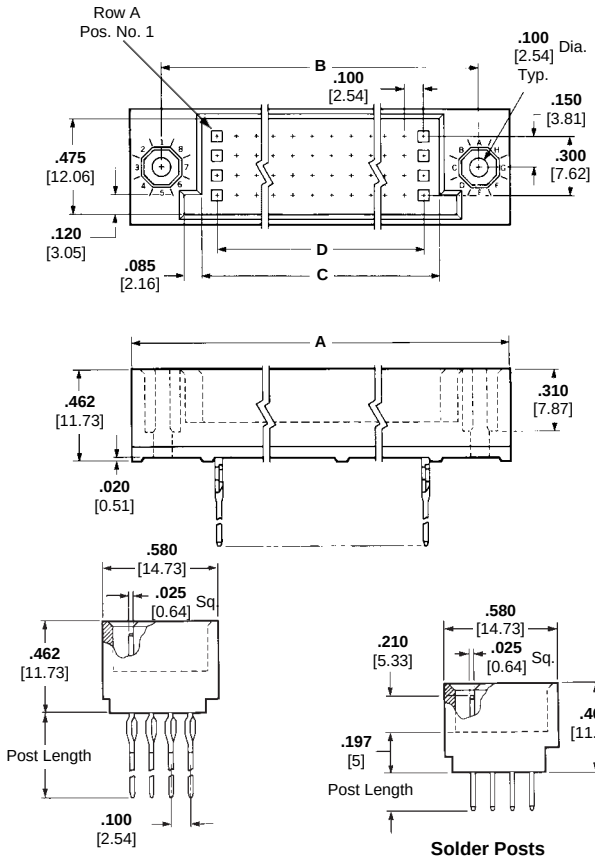

No. of Positions	Dimensions A	B	C	D	Post Length	Contact Finish	Part Numbers* ACTION PIN Posts	Solder Posts
100	**3.250** 82.55	**2.950** 74.93	**2.550** 64.77	**2.400** 60.96	**.533** 13.54	B	533270-1	—
					.250 6.35	A	532448-1	—
					.190 4.83	A	—	532436-1
120	**3.750** 95.25	**3.450** 87.63	**3.505** 77.47	**2.900** 73.66	**.250** 6.35	A	532448-2	—
128	**3.950** 100.33	**3.650** 92.71	**3.250** 82.55	**3.100** 78.74	**.250** 6.35	A	532448-3	—
					.190 4.83	A	—	532436-3
140	**4.250** 107.95	**3.950** 100.33	**3.550** 90.17	**3.400** 86.36	**.250** 6.35	A	532448-4	—
160	**4.750** 120.65	**4.450** 113.03	**4.050** 102.87	**3.900** 99.06	**.250** 6.35	A	532448-5	—
					.190 4.83	A	—	532436-5
180	**5.250** 133.35	**4.950** 125.73	**4.550** 115.57	**4.400** 111.76	**.250** 6.35	A	532448-6	—
200	**5.750** 146.05	**5.450** 138.43	**5.050** 128.27	**4.900** 124.46	**.250** 6.35	A	532448-7	—
					.190 4.83	A	—	532436-7
220	**6.250** 158.75	**5.950** 151.13	**5.550** 140.97	**5.400** 137.16	**.250** 6.35	A	532448-8	—
240	**6.750** 171.45	**6.450** 163.83	**6.050** 153.67	**5.900** 149.86	**.250** 6.35	A	532448-9	—
280	**7.750** 196.85	**7.450** 189.23	**7.050** 179.07	**6.900** 175.26	**.250** 6.35	A	1-532448-1	—
300	**8.250** 209.55	**7.950** 201.93	**7.550** 191.77	**7.400** 187.96	**.250** 6.35	A	1-532448-2	—

*Connectors with other post style/length/plating combinations can be made available, consult Tyco Electronics.

For complete product information, order Catalog 82618

Products for Industrial & Commercial Applications

Dimensions are shown for reference purposes only.

Dimensions are in inches and millimeters unless otherwise specified. Values in brackets are metric equivalents.

Specifications subject to change.

Technical Support Center
1-800-522-6752
www.tycoelectronics.com

Four-Row Receptacle Assemblies Without Guide Holes

Right-Angle Solder Posts

Material and Finish:

Housing—Brown glass-filled polyphenylene sulfide

Contacts—Beryllium copper, plated .000030 [0.00076] gold in contact area; tin on posts, with entire contact underplated .000050-.000100 [0.00127-0.00254] nickel

Related Product Data:

Mateable Connectors—page 3069

Guide/Power Pins—page 3076

Technical Documents:

Product Specification
108-9063

Application Specification
114-9008

Instruction Sheets
408-6626, 408-6909, 408-9141, 408-9007

Note: Housing with center guide is recommended for assemblies having 75 contacts or more per row.

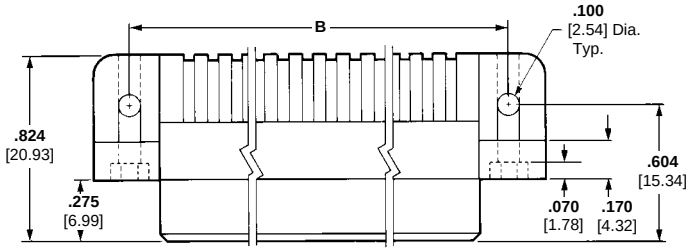

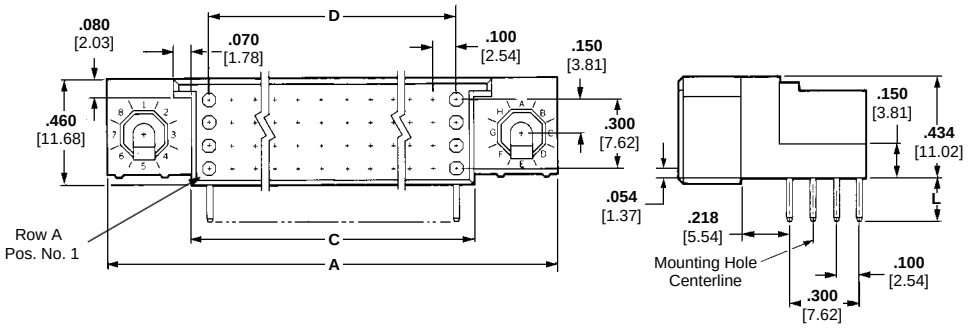

No. of Positions	Dimensions				Part Numbers*	
	A	B	C	D	L = .180 [4.57]	L = .120 [3.05]
100	**3.250** 82.55	**2.950** 74.93	**2.524** 64.11	**2.400** 60.96	532434-1	532903-2
120	**3.750** 95.25	**3.450** 87.63	**3.024** 76.81	**2.900** 73.66	—	1-532903-2
128	**3.950** 100.33	**3.650** 92.71	**3.224** 81.89	**3.100** 78.74	—	532903-3
140	**4.250** 107.95	**3.950** 100.33	**3.524** 89.51	**3.400** 86.36	—	532903-4
160	**4.750** 120.65	**4.450** 113.03	**4.024** 102.21	**3.900** 99.06	—	532903-5
180	**5.250** 133.35	**4.950** 125.73	**4.524** 114.91	**4.400** 111.76	—	532903-6
200	**5.750** 146.05	**5.450** 138.43	**5.024** 127.61	**4.900** 124.46	532434-7	532903-7
220	**6.250** 158.75	**5.950** 151.13	**5.524** 140.31	**5.400** 137.16	532434-8	—
240	**6.750** 171.45	**6.450** 163.83	**6.024** 153.01	**5.900** 149.86	—	532903-9
280	**7.750** 196.85	**7.450** 189.23	**7.024** 178.41	**6.900** 175.26	—	1-532903-1
300	**8.250** 209.55	**7.950** 201.93	**7.524** 191.11	**7.400** 187.96	1-532434-2	532903-1

*Connectors with other post lengths can be made available, consult Tyco Electronics.

For complete product information, order Catalog 82618

Products for Industrial & Commercial Applications

Dimensions are shown for reference purposes only.

Dimensions are in inches and millimeters unless otherwise specified. Values in brackets are metric equivalents.

Specifications subject to change.

Technical Support Center
1-800-522-6752
www.tycoelectronics.com

Three-Row Pin Assemblies Without Guide Holes

Vertical Posts

Material and Finish:

Housing—Brown glass-filled polyphenylene sulfide

Contacts—Phosphor bronze, plated as follows:

A .000030 [0.00076] gold in contact area; tin on posts, with entire contact underplated .000050-.000100 [0.00127-0.00254] nickel

Related Product Data:

Mateable Connectors—page 3072

Guide/Power Pins—pages 3075, 3076

Application Tooling—page 3077

Technical Documents:

Product Specifications
108-9063, 108-16

Application Specification
114-9008

Instruction Sheets
408-2636, 408-6626, 408-6909, 408-6927, 408-9007, 408-9038, 408-9142, 408-9185

Note: Housing with center mounting is recommended for assemblies having 75 contacts or more per row.

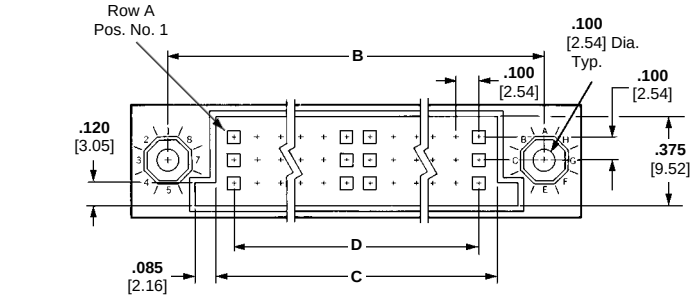

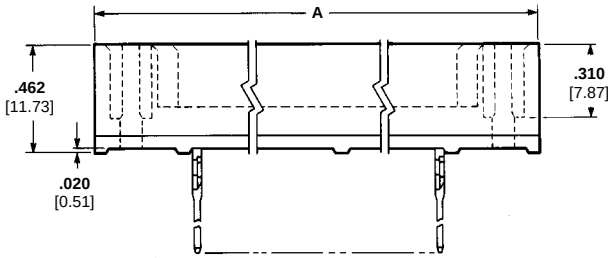

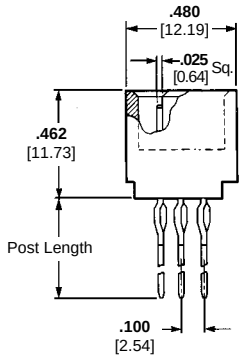

ACTION PIN Posts

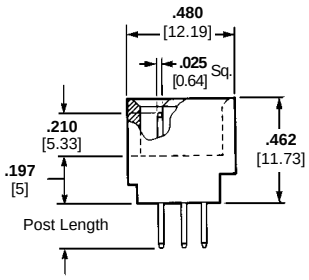

Solder Posts

No. of Positions	Dimensions A	B	C	D	Post Length	Part Numbers* ACTION PIN Posts	Solder Posts
75	**3.250** 82.55	**2.950** 74.93	**2.550** 64.77	**2.400** 60.96	**.250** 6.35	532447-1	—
90	**3.750** 95.25	**3.450** 87.63	**3.050** 77.47	**2.900** 73.66	**.190** 4.83	—	532433-2
96	**3.950** 100.33	**3.650** 92.71	**3.250** 82.55	**3.100** 78.74	**.250** 6.35	532447-3	—
					.190 4.83	—	532433-3
120	**4.750** 120.65	**4.450** 113.03	**4.050** 102.87	**3.900** 99.06	**.533** 13.54	533061-5	—
150	**5.750** 146.05	**5.450** 138.43	**5.050** 128.27	**4.900** 124.46	**.250** 6.35	532447-7	—
165	**6.250** 158.75	**5.950** 151.13	**5.550** 140.97	**5.400** 137.16	**.190** 4.83	—	532433-8
180	**6.750** 171.45	**6.450** 163.83	**6.050** 153.67	**5.900** 149.86	**.250** 6.35	532447-9	—
210	**7.750** 196.85	**7.450** 189.23	**7.050** 179.07	**6.900** 175.26	**.250** 6.35	1-532447-1	—
225	**8.250** 209.55	**7.950** 201.93	**7.550** 191.77	**7.400** 187.96	**.250** 6.35	1-532447-2	—

*Connectors with other post style/length/plating combinations can be made available, consult Tyco Electronics.

For complete product information, order Catalog 82618

Products for Industrial & Commercial Applications

Dimensions are shown for reference purposes only.

Dimensions are in inches and millimeters unless otherwise specified. Values in brackets are metric equivalents.

Specifications subject to change.

Technical Support Center
1-800-522-6752
www.tycoelectronics.com

Three-Row Receptacle Assemblies Without Guide Holes

Right-Angle Solder Posts

Material and Finish:

Housing—Brown glass-filled polyphenylene sulfide

Contacts—Beryllium copper, plated .000030 [0.00076] gold in contact area; tin on posts, with entire contact underplated .000050-.000100 [0.00127-0.00254] nickel

Related Product Data:

Mateable Connectors—page 3071

Guide Pin/Power Receptacles—page 3076

Technical Documents:

Product Specification
108-9063

Application Specification
114-9008

Instruction Sheets
408-6626, 408-6909, 408-9141, 408-9007

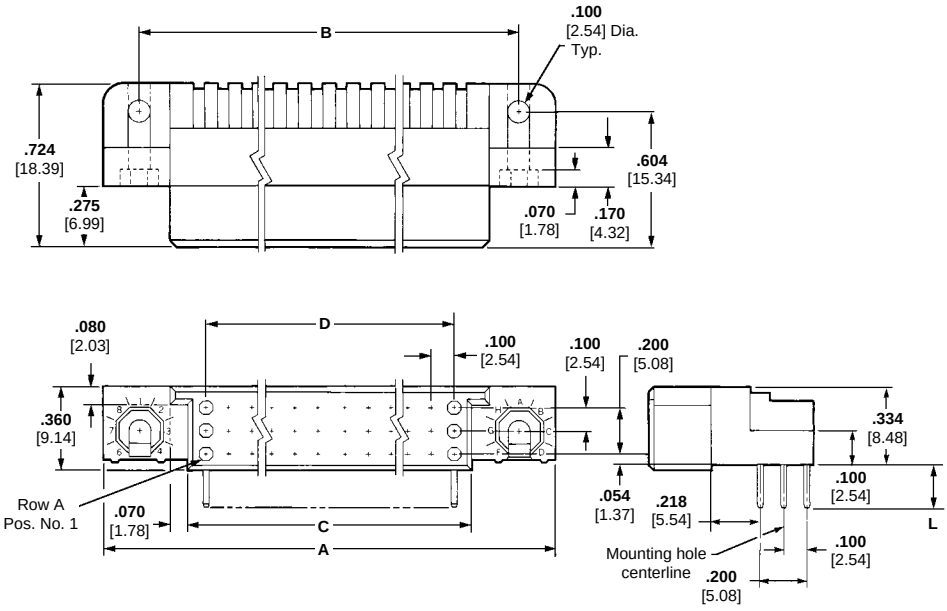

No. of Positions	Dimensions				Part Numbers*	
	A	B	C	D	L = .180 [4.57]	L = .120 [3.05]
75	**3.250** 82.55	**2.950** 74.93	**2.524** 64.11	**2.400** 60.96	532431-1	533268-1
90	**3.750** 95.25	**3.450** 87.63	**3.024** 76.81	**2.900** 73.66	—	533268-2
96	**3.950** 100.33	**3.650** 92.71	**3.224** 81.89	**3.100** 78.74	—	533268-3
120	**4.750** 120.65	**4.450** 113.03	**4.024** 102.21	**3.900** 99.06	532431-5	—
150	**5.750** 146.05	**5.450** 138.43	**5.024** 127.61	**4.900** 124.46	532431-7	—
165	**6.250** 158.75	**5.950** 151.13	**5.524** 140.31	**5.400** 137.16	532431-8	—
180	**6.750** 171.45	**6.450** 163.83	**6.024** 153.01	**5.900** 149.86	532431-9	533268-9
210	**7.750** 196.85	**7.450** 189.23	**7.024** 178.41	**6.900** 175.26	1-532431-1	—
225	**8.250** 209.55	**7.950** 201.93	**7.524** 191.11	**7.400** 187.96	—	1-533268-2

*Connectors with other post lengths can be made available, consult Tyco Electronics.

For complete product information, order Catalog 82618

Products for Industrial & Commercial Applications

Dimensions are shown for reference purposes only.

Dimensions are in inches and millimeters unless otherwise specified. Values in brackets are metric equivalents.

Specifications subject to change.

Technical Support Center
1-800-522-6752
www.tycoelectronics.com

Two-Row Pin Assemblies Without Guide Holes

Vertical Posts

Material and Finish:

Housing—Brown glass-filled polyphenylene sulfide

Contacts—Phosphor bronze, plated as follows:

A .000030 [0.00076] gold in contact area; tin on posts, with entire contact underplated .000050-000100 [0.00127-0.00254] nickel

Related Product Data:

Mateable Connectors—page 3074
Application Tooling—page 3077

Technical Documents:

Product Specifications
108-9063, 108-16

Application Specification
114-9008

Instruction Sheets
408-2636, 408-6909, 408-6927, 408-9007, 408-9038, 408-9142, 408-9178, 408-9185

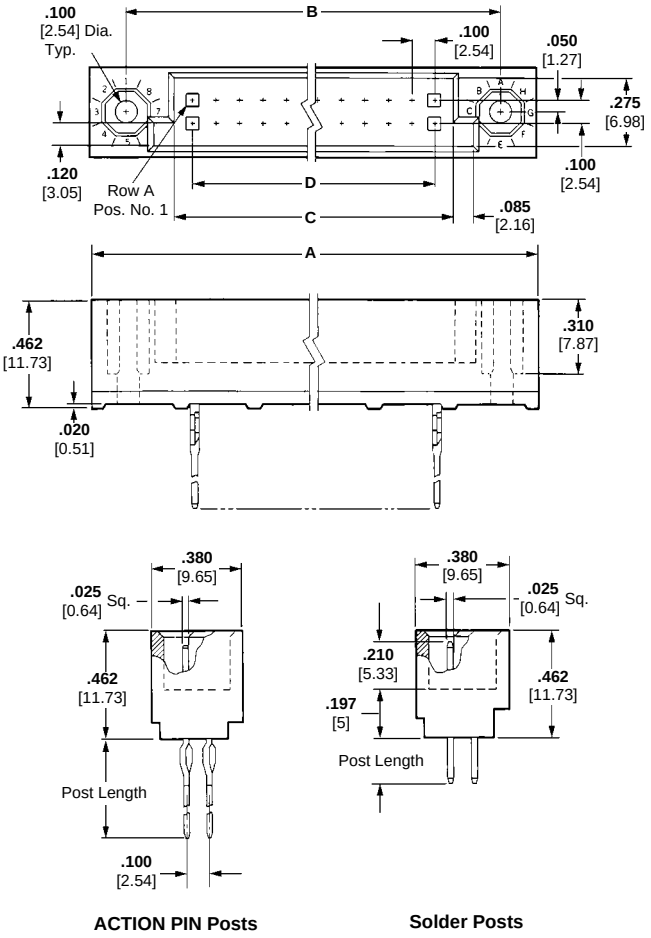

ACTION PIN Posts **Solder Posts**

No. of Positions	Dimensions A	B	C	D	Post Length	Part Numbers* ACTION PIN Posts	Solder Posts
40	**2.750** 69.85	**2.450** 62.23	**2.050** 52.07	**1.900** 48.26	**.190** 4.83	—	532430-3
50	**3.250** 82.55	**2.950** 74.93	**2.550** 64.77	**2.400** 60.96	**.250** 6.35	532446-4	—
60	**3.750** 95.25	**3.450** 87.63	**3.050** 77.47	**2.900** 73.66	**.190** 4.83	—	532430-5
80	**4.750** 120.65	**4.450** 113.03	**4.050** 102.87	**3.900** 99.06	**.190** 4.83	—	532430-7
100	**5.750** 146.05	**5.450** 138.43	**5.050** 128.27	**4.900** 124.46	**.190** 4.83	—	532430-9
150	**8.250** 209.55	**7.950** 201.93	**7.550** 191.77	**7.400** 187.96	**.250** 6.35	1-532446-4	—

*Connectors with other post style/length/plating combinations can be made available, consult Tyco Electronics.

For complete product information, order Catalog 82618

Products for Industrial & Commercial Applications

Dimensions are shown for reference purposes only.

Dimensions are in inches and millimeters unless otherwise specified. Values in brackets are metric equivalents.

Specifications subject to change.

Technical Support Center
1-800-522-6752
www.tycoelectronics.com

Two-Row Receptacle Assemblies Without Guide Holes

Right-Angle Solder Posts

Material and Finish:

Housing—Brown glass-filled polyphenylene sulfide

Contacts—Beryllium copper, plated .000030 [0.00076] gold in contact area; tin on posts, with entire contact underplated .000050-.000100 [0.00127-0.00254] nickel

Related Product Data:

Mateable Connectors—page 3073

Technical Documents:

Product Specification
108-9063

Application Specification
114-9008

Instruction Sheets
408-6909, 408-9007, 408-9141, 408-9178

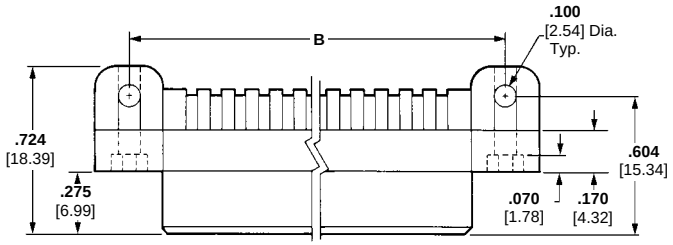

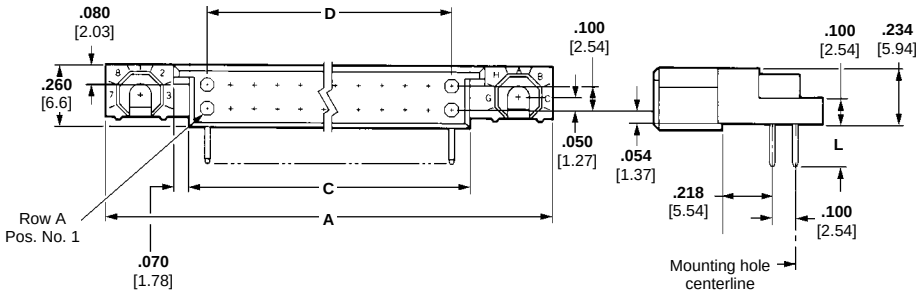

No. of Positions	Dimensions				Part Numbers*	
	A	B	C	D	L = .180 [4.57]	L = .120 [3.05]
40	**2.750** 69.85	**2.450** 62.23	**2.024** 51.41	**1.900** 48.26	532428-3	—
50	**3.250** 82.55	**2.950** 74.93	**2.524** 64.11	**2.400** 60.96	532428-4	—
60	**3.750** 95.25	**3.450** 87.63	**3.024** 76.81	**2.900** 73.66	532428-5	—
80	**4.750** 120.65	**4.450** 113.03	**4.024** 102.21	**3.900** 99.06	—	532825-7
100	**5.750** 146.05	**5.450** 138.43	**5.024** 127.61	**4.900** 124.46	532428-9	—
150	**8.250** 209.55	**7.950** 201.93	**7.524** 191.11	**7.400** 187.96	—	1-532825-4

*Connectors with other post lengths can be made available, consult Tyco Electronics.

For complete product information, order Catalog 82618

Products for Industrial & Commercial Applications

Dimensions are shown for reference purposes only.

Dimensions are in inches and millimeters unless otherwise specified. Values in brackets are metric equivalents.

Specifications subject to change.

Technical Support Center
1-800-522-6752
www.tycoelectronics.com

Hardware and Applications

Guide Pin Kits (for use in Center Guide Holes)

Material and Finish:

Washer— Passivated stainless steel

Pin— Passivated stainless steel

Nut— Passivated stainless steel

See AMP Instruction Sheet 408-6909.

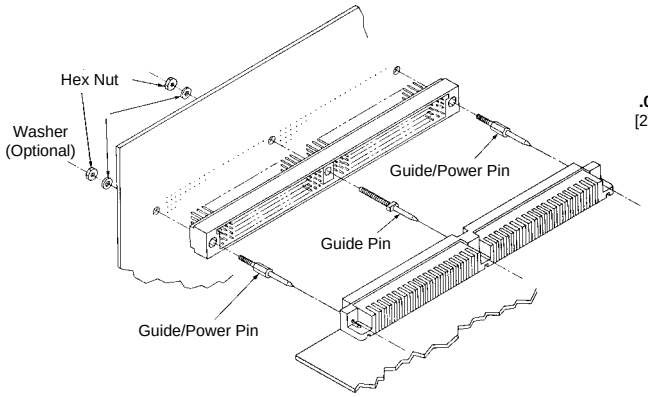

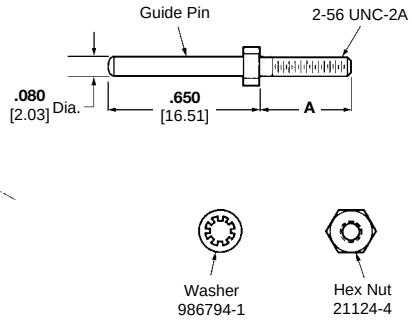

Dimensions A	Guide Pin Part Numbers	Guide Pin Kit Numbers
.475 12.06	532807-1	532808-1
.562 14.27	532807-2	532808-2
.750 19.05	532807-3	532808-3

Note: Each kit includes a guide pin, washer and nut. All parts may be purchased separately.

Guide/Power Pins/Static Discharge Guide/Power Pins

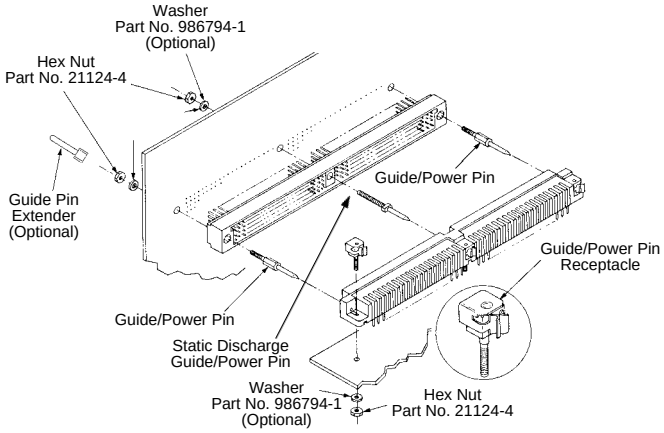

Current Rating: 10 Amperes Max.

Material and Finish:

Brass, plated .000030 [0.00076] gold over .000050-.000100 [0.00127-0.00254] nickel

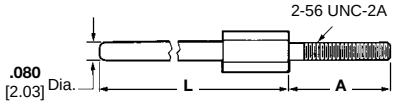

Guide/Power Pins (For Use in End Guide Holes)

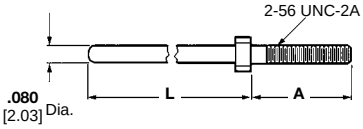

Static Discharge Guide/Power Pins (For Use in Center Guide Holes)

Guide/Power Pins (For Use in End Guide Holes)

Dimensions A Inch	Dimensions A mm	Dimensions L Inch	Dimensions L mm	Finish	Part Numbers
		1.025	26.04	None	533082-1
.375	9.52	**1.025**	26.04	Gold/Nickel	533082-3
		1.195	30.35	Gold/Nickel	533082-4
.475	12.07	**1.195**	30.35	Gold/Nickel	533082-6
.475	12.07	**1.025**	26.04	Gold/Nickel	533082-9
.560	14.22	**1.025**	26.04	Gold/Nickel	1-533082-1

Static Discharge Guide/Power Pins (For Use in Center Guide Holes)

Dimensions A Inch	Dimensions A mm	Dimensions L Inch	Dimensions L mm	Part Numbers
.475	12.07	**1.150**	29.21	532828-2
.475	12.07	**.980**	24.89	532828-5
.475	12.07	**1.025**	26.04	532828-8
.475	12.07	**1.195**	30.35	1-532828-1

For complete product information, order Catalog 82618

Products for Industrial & Commercial Applications
Dimensions are shown for reference purposes only.
Dimensions are in inches and millimeters unless otherwise specified. Values in brackets are metric equivalents.
Specifications subject to change.
Technical Support Center
1-800-522-6752
www.tycoelectronics.com

Power Hardware and Applications (for Three and Four-Row Connectors Only)

Guide Pin Extender

Currrent Rating: 10 Amperes Max.

Material and Finish:

Passivated stainless steel

Part Number 533265-1

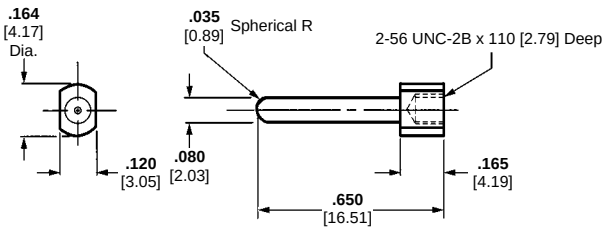

Guide Pin/Power Receptacles (for use in End Mounts)

Current Rating: 10 Amperes Max.

Material and Finish:

Copper alloy, plated .000030 [0.00076] gold in contact area and gold flash on remainder, with entire contact underplated .000030 [0.00076] nickel

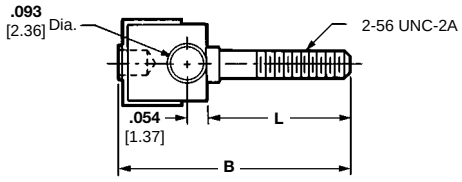

Dimensions		Part Numbers
B	L	
.678 17.22	**.425** 10.80	532924-1
.578 14.68	**.325** 8.26	532924-3
.538 13.67	**.285** 7.25	532924-4

Guide Pin/Power Receptacles (for use in Center Mounts)

Current Rating: 10 Amperes Max.

Material and Finish

Copper alloy, plated .000030 [0.00076] gold in contact area and gold flash on remainder, with entire contact underplated .000030 [0.00076] nickel

Part Number 533065-1

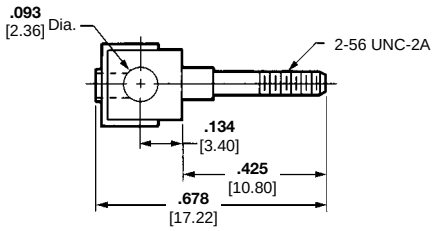

Application Tooling

Seating Tools for AMP-HDI Four-Row Pin Assemblies

*Seating Tool is used in seating machine such as:
SM-10/20 Machine No. 803880-6 or SM-3 Machine No. 814700-2
Also requires customer supplied Board Support Fixture (See AMP Instruction Sheet 408-6927)

Pin Assembly Configuration			Seating Tools*	
No. of Bays	No. of Pins/Row/Bay	Total No. of Pins	Tool Numbers	No. of Tools Required
One (without Guide Holes)	25	100	2-58172-1	One
	32	128	2-58172-2	
	35	140	4-58172-0	
	36	144	4-58172-1	
	40	160	2-58172-3	
	41	164	4-58172-3	
	44	176	4-58172-4	
	45	180	2-58172-5	
	50	200	2-58172-9	
	55	220	3-58172-3	
	60	240	3-58172-6	
	65	260	5-58172-6	
	75	300	2-58172-0	
	80	320	4-58172-7	

Seating Tools for AMP-HDI Three-Row Pin Assemblies

Pin Assembly Configuration			Seating Tools	
No. of Bays	No. of Pins/Row/Bay	Total No. of Pins	Tool Numbers	No. of Tools Required
One (without Guide Holes)	8	24	4-58172-8	One
	25	75	5-58172-0	
	30	90	4-58172-5	
	32	96	58172-9	
	40	120	1-58172-0	
	46	138	1-58172-3	
	50	150	3-58172-9	
	55	165	1-58172-6	
	60	180	3-58172-8	
	70	210	1-58172-9	
	75	225	58172-8	
	80	240	6-58172-6	
	97	291	4-58172-9	
	100	300	5-58172-3	

Seating Tools for AMP-HDI Two-Row Pin Assemblies

Pin Assembly Configuration			Seating Tools	
No. of Bays	No. of Pins/Row/Bay	Total No. of Pins	Tool Numbers	No. of Tools Required
One (without Guide Holes)	15	30	4-58172-2	One
	25	50	5-58172-1	
	30	60	58172-2	
	35	70	58172-3	
	40	80	58172-4	
	50	100	58172-5	
	55	110	58172-6	
	60	120	5-58172-2	
	63	126	5-58172-4	
	70	140	58172-7	
	75	150	58172-1	
	100	200	5-58172-3	

For complete product information, order Catalog 82618

Products for Industrial & Commercial Applications
Dimensions are shown for reference purposes only.
Dimensions are in inches and millimeters unless otherwise specified. Values in brackets are metric equivalents.
Specifications subject to change.
Technical Support Center
1-800-522-6752
www.tycoelectronics.com

Product Facts

- **Six rows of contacts on high-density .100 [2.54] grid**
- **Modular design with 90- and 120-position modules**
- **High-conductivity beryllium copper twin-beam receptacle contacts provide two redundant points of contact**
- **Headers use ACTION PIN press-fit contacts with .025 x .025 [0.64 x 0.64] posts**
- **Various pin heights for make-first/break-last sequencing of ground, power and signals**
- **Select loading available**
- **Guide pins provide positive connector alignment**
- **Keying hardware allows 64 combinations to prevent mismating**
- **Receptacle modules preassembled to stiffener**
- **Right-angle pin headers available for card extender applications**
- **Integral (nonmodular) assemblies available for high-volume requirements**
- **Interchangeable with other high-density, six-row connectors**

AND

- **Recognized to U.S. and Canadian requirements under the Component Recognition Program of Underwriters Laboratories Inc., File No. E28476**

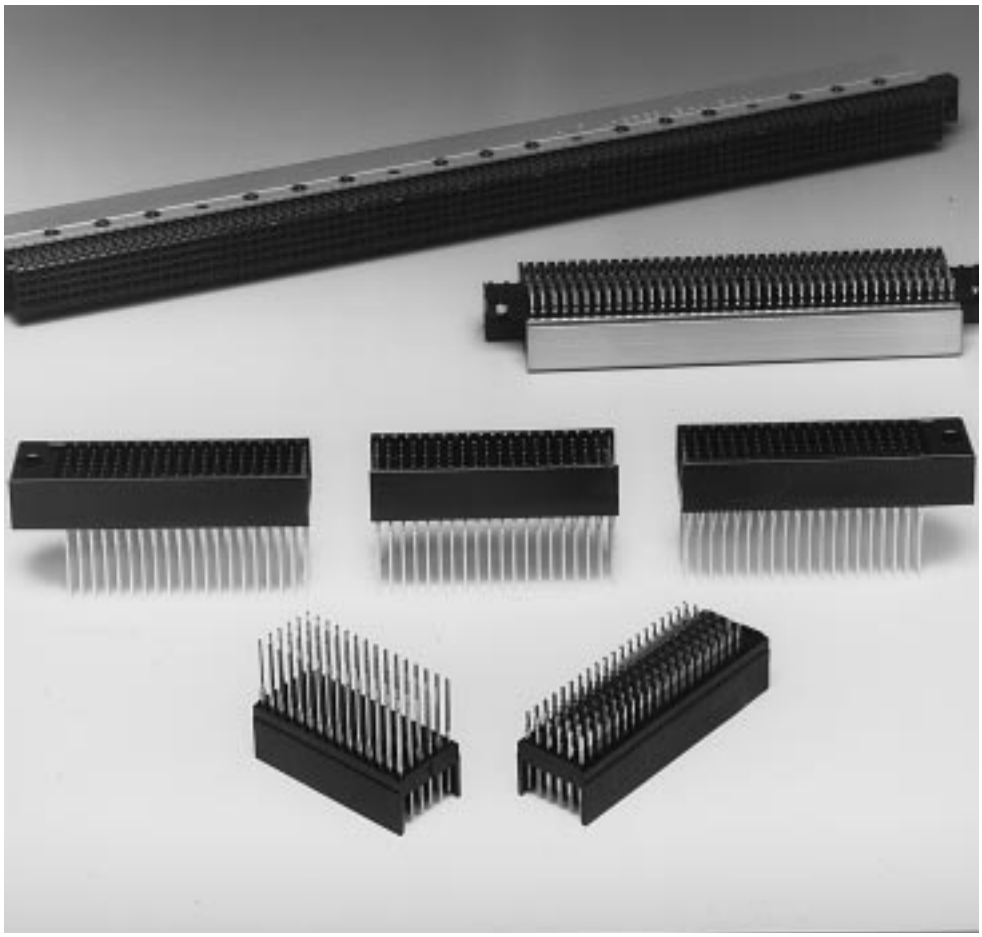

AMP TBC Plus connectors combine economy and high performance into a high-density, six-row connector. The connectors are modular, consisting of 90- and 120-position post header modules and right-angle receptacle connectors. Contacts are on a .100 x .100 [2.54 x 2.54] grid. The modules can be combined to create high-pin-count interconnections which can exceed 1200.

At the heart of the TCB Plus connector is the twin-beam receptacle contact. Its design and beryllium copper material provide the high normal force, contact wipe, and conductivity for a reliable electrical connection when mated to .025 x .025 [.064 x .064] posts.

Header posts are available in various heights to allow four-level sequencing of ground, power, and signals.

Posts use ACTION PIN contact feature for fast, solderless, press-fit application to the motherboard.

Each connector assembly includes two eight-way keying slots and can be configured with zero, one or two guide holes.

Material and Finish:

Housing—Black glass-filled polyester, 94V-0 rated

Receptacle Contacts—Beryllium copper, duplex plated .000030 [0.00076] gold in mating area, tin-lead on solder posts, with entire contact underplated .000050 [0.00127] min. nickel

Pin Contacts—Phosphor bronze, duplex plated .000030 [0.00076] gold in mating area, tin-lead on solder posts, with entire contact underplated .000050 [0.00127] min. nickel. Version with .555 [14.10] post length also has .000030 [0.00076] gold on lower .200 [5.08] of posts with gold flash on remainder of post.

Stiffener—Aluminum

Power Guide Pin—Brass, plated .000030 [0.00076] gold over .000050 [0.00127] min. nickel

Power Guide Receptacle Assembly—Phosphor bronze contact, plated .000030 [0.00076] gold in contact area and gold flash on remainder, with entire contact underplated .000050 [0.00127] min. nickel. Brass bracket, plated gold flash over .000030 [0.00076] min. nickel

Center Guide Pin, Guide Pin, Inserts, Key Pin, Washers, and Nuts—Stainless steel

For complete product information, order Catalog 82618

Products for Industrial & Commercial Applications

Dimensions are shown for reference purposes only.

Dimensions are in inches and millimeters unless otherwise specified. Values in brackets are metric equivalents.

Specifications subject to change.

Technical Support Center
1-800-522-6752
www.tycoelectronics.com

Vertical Pin Header Modules

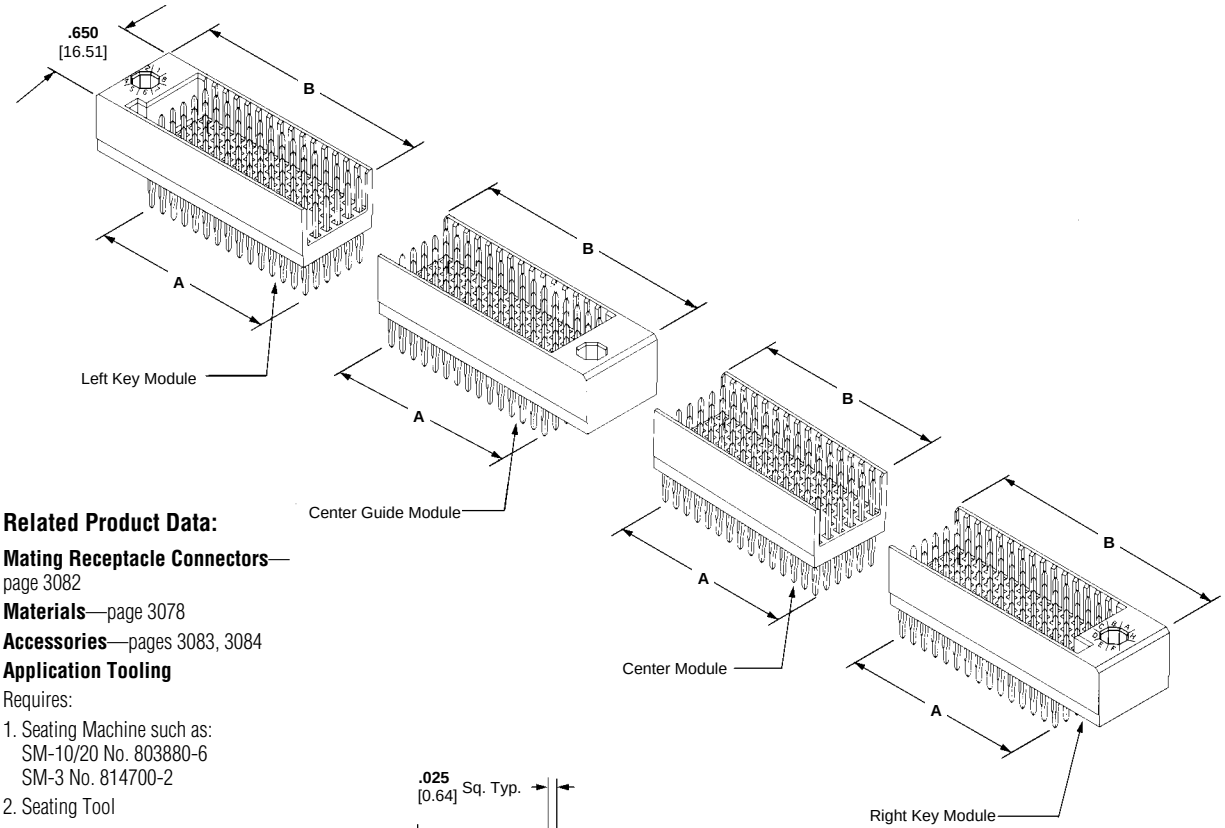

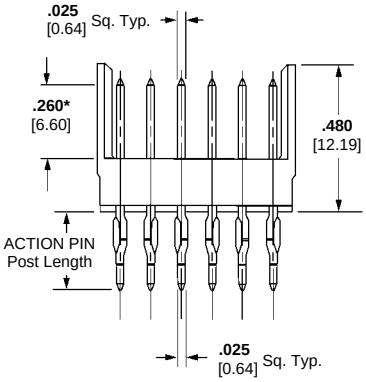

Note: ACTION PIN posts require .093 [2.36] min. thick PC board.
***** .180 [4.57] and .220 [5.59] post lengths available upon request.

Related Product Data:

Mating Receptacle Connectors—page 3082

Materials—page 3078

Accessories—pages 3083, 3084

Application Tooling

Requires:

1. Seating Machine such as:
   SM-10/20 No. 803880-6
   SM-3 No. 814700-2
2. Seating Tool

Pin Header Module Size	Seating Tool Numbers*
90 Pos.	58411-1
120 Pos.	58411-2

*For additional sizes, see AMP Instruction Sheet 408-9543.

3. Customer-Supplied Board Support Fixture (see AMP Instruction Sheet 408-9543)

Technical Documents:

Product Specifications
108-1188, 108-16

Application Specification
114-25036

Instruction Sheets
408-6927, 408-9

Module Type	No. of Positions	Dimensions A	Dimensions B	Module Part Numbers .250 [6.35] Post Length	Module Part Numbers .555 [14.10] Post Length
Left Key	90	**1.400** 35.56	**1.868** 47.45	535843-1	535843-5
	120	**1.900** 48.26	**2.368** 60.15	535843-2	535843-6
Center	90	**1.400** 35.56	**1.497** 38.02	535841-1	535841-5
	120	**1.900** 48.26	**1.997** 50.72	535841-2	535841-6
Center Guide	90	**1.400** 35.56	**1.789** 45.44	650369-1	650369-5
	120	**1.900** 48.26	**2.289** 58.14	650369-2	650369-6
Right Key	90	**1.400** 35.56	**1.868** 47.45	535845-1	535845-5
	120	**1.900** 48.26	**2.368** 60.15	535845-2	535845-6

Note: Consult Tyco Electronics for information on selective loading of different height posts for sequencing.

For complete product information, order Catalog 82618

Products for Industrial & Commercial Applications
Dimensions are shown for reference purposes only.
Dimensions are in inches and millimeters unless otherwise specified. Values in brackets are metric equivalents.
Specifications subject to change.
Technical Support Center
1-800-522-6752
www.tycoelectronics.com

Modular Pin Assemblies Without Guide Holes

Related Product Data:

Mating Receptacle Connectors—page 3082
Materials—page 3078
Accessories—pages 3083, 3084

Technical Documents:

Product Specifications
108-1188, 108-16
Application Specification
114-25036
Instruction Sheets
408-6927, 408-9543

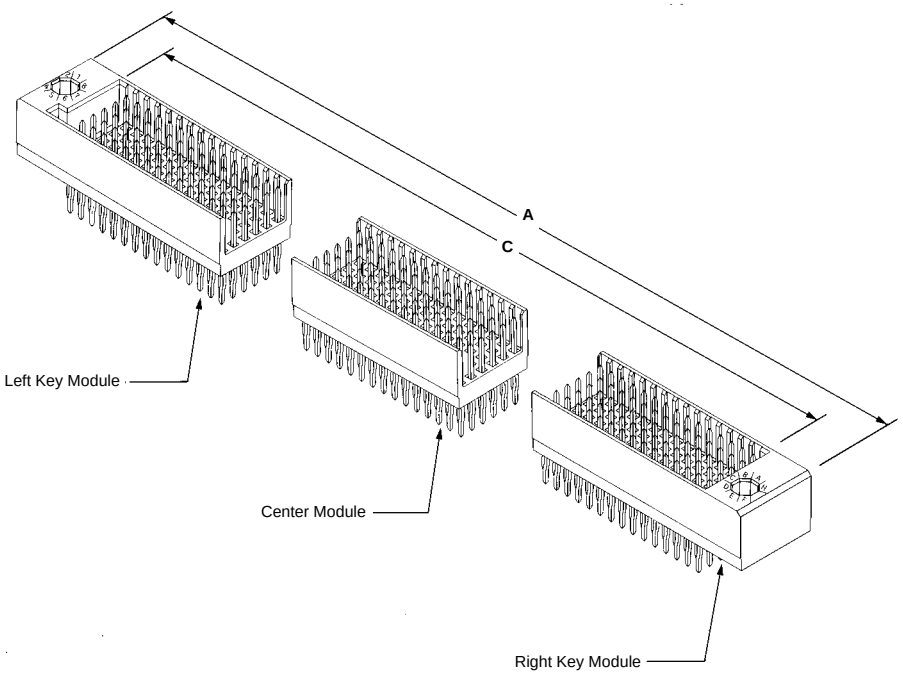

No. of Positions	Dimensions				Modules Required					
					Left Key		Center		Right Key	
	A	B	C	D	90	120	90	120	90	120
180	**3.750** 95.25	**3.450** 87.63	**3.050** 77.47	**2.900** 73.66	1	—	—	—	1	—
210	**4.250** 107.95	**3.950** 100.33	**3.550** 90.17	**3.400** 86.36	1	—	—	—	—	1
240	**4.750** 120.65	**4.450** 113.03	**4.050** 102.87	**3.900** 99.06	—	1	—	—	—	1
270	**5.250** 133.35	**4.950** 125.73	**4.550** 115.57	**4.400** 111.76	1	—	1	—	1	—
300	**5.750** 146.05	**5.450** 138.43	**5.050** 128.27	**4.900** 124.46	1	—	—	1	1	—
330	**6.250** 158.75	**5.950** 151.13	**5.550** 140.97	**5.400** 137.16	—	1	1	—	—	1
360	**6.750** 171.45	**6.450** 163.83	**6.050** 153.67	**5.900** 149.86	—	1	—	1	—	1
390	**7.250** 184.15	**6.950** 176.53	**6.550** 166.37	**6.400** 162.56	1	—	1	1	1	—
420	**7.750** 196.85	**7.450** 189.23	**7.050** 179.07	**6.900** 175.26	1	—	1	1	—	1
450	**8.250** 209.55	**7.950** 201.93	**7.550** 191.77	**7.400** 187.96	—	1	1	1	—	1
480	**8.750** 222.25	**8.450** 214.63	**8.050** 204.47	**7.900** 200.66	—	1	—	2	—	1
600	**10.750** 273.05	**10.450** 265.43	**10.050** 255.27	**9.900** 251.46	—	1	—	3	—	1

For complete product information, order Catalog 82618

Products for Industrial & Commercial Applications
Dimensions are shown for reference purposes only.
Dimensions are in inches and millimeters unless otherwise specified. Values in brackets are metric equivalents.
Specifications subject to change.
Technical Support Center
1-800-522-6752
www.tycoelectronics.com

Modular Pin Assemblies With Guide Holes

One Guide Hole

Related Product Data:

Mating Receptacle Connectors—page 3082
Materials—page 3078
Accessories—pages 3083, 3084

Technical Documents:

Product Specifications
108-1188, 108-16
Application Specification
114-25036
Instruction Sheets
408-6927, 408-9543

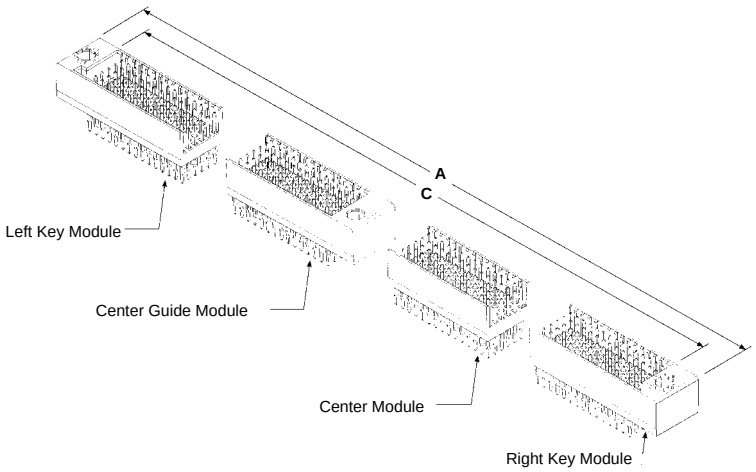

No. of Positions	Dimensions					Modules Required							
						Left Key		Center		Center Guide		Right Key	
	A	B	C	D	E	90	120	90	120	90	120	90	120
480	**9.050** 229.87	**8.750** 222.25	**8.350** 212.09	**3.900** 99.06	**4.375** 111.13	—	1	—	1	—	1	—	1
540	**10.050** 255.27	**9.750** 247.65	**9.350** 237.49	**4.400** 111.76	**4.875** 123.83	1	—	3	—	1	—	1	—
600	**11.050** 280.67	**10.750** 273.05	**10.350** 262.89	**4.900** 124.46	**5.375** 136.53	—	1	3	—	1	—	—	1
660	**12.050** 306.07	**11.750** 298.45	**11.350** 288.29	**5.400** 137.16	**5.875** 149.23	1	—	—	3	—	1	1	—

Two Guide Holes

Related Product Data:

Mating Receptacle Connectors—page 3082
Materials—page 3078
Accessories—pages 3083, 3084

Technical Documents:

Product Specifications
108-1188, 108-16
Application Specification
114-25036
Instruction Sheets
408-6927, 408-9543

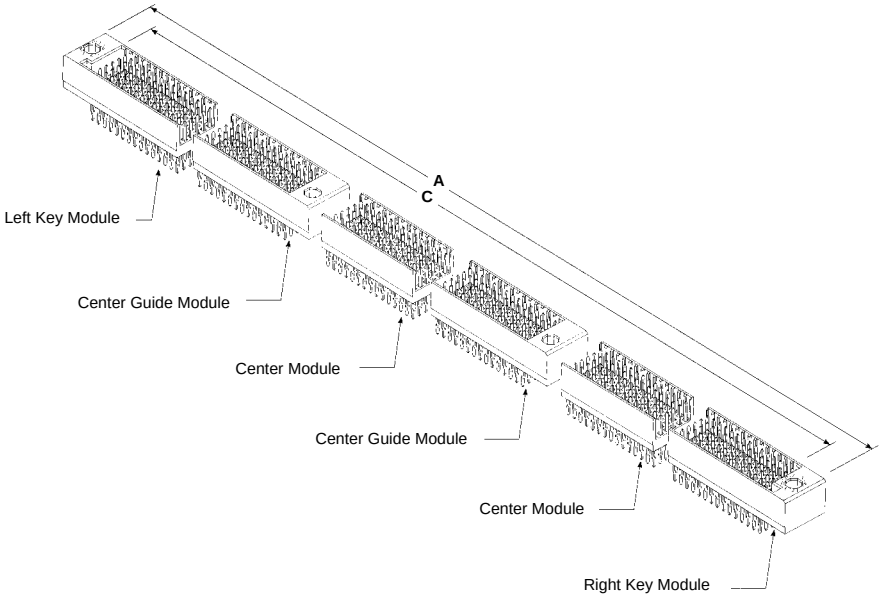

No. of Position	Dimensions						Modules Required							
							Left Key		Center		Center Guide		Right Key	
	A	B	C	D	E	F	90	120	90	120	90	120	90	120
720	**13.350** 339.09	**13.050** 331.47	**12.650** 321.31	**3.900** 99.06	**4.375** 111.13	**4.300** 109.22	—	1	—	2	—	2	—	1
810	**14.850** 377.19	**14.550** 369.57	**14.150** 359.11	**4.400** 111.76	**4.875** 123.83	**4.800** 121.92	1	—	5	—	2	—	1	—

For complete product information, order Catalog 82618

Products for Industrial & Commercial Applications
Dimensions are shown for reference purposes only.
Dimensions are in inches and millimeters unless otherwise specified. Values in brackets are metric equivalents.
Specifications subject to change.
Technical Support Center
1-800-522-6752
www.tycoelectronics.com

Modular Receptacle Assemblies

Related Product Data:

Mating Pin Headers—
pages 3079 thru 3081
Materials—page 3078
Accessories—pages 3083, 3084

Technical Documents:

Product Specification
108-1188
Application Specification
114-25036
Instruction Sheet
408-9868

Without Center Guide

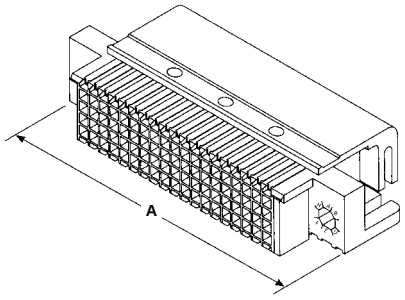

With One Center Guide

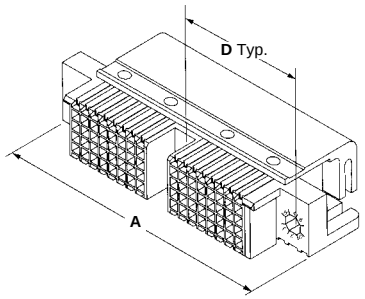

With Two Center Guides

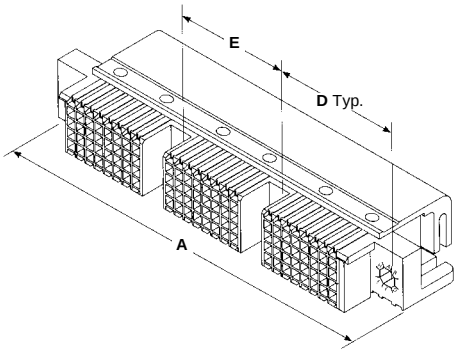

No. of Guides	No. of Positions	Dimensions A	B	C	D	E	Part Numbers
0	180	**3.730** 94.74	**3.450** 87.63	**2.900** 73.66	—	—	535919-1
	210	**4.230** 107.44	**3.950** 100.33	**3.400** 86.36	—	—	535919-2
	240	**4.730** 120.14	**4.450** 113.03	**3.900** 99.06	—	—	535919-3
	270	**5.230** 132.84	**4.950** 125.73	**4.400** 111.76	—	—	535919-4
	300	**5.730** 145.54	**5.450** 140.72	**4.900** 124.46	—	—	535919-5
	330	**6.230** 158.24	**5.950** 151.13	**5.400** 137.16	—	—	535919-6
	360	**6.730** 170.94	**6.450** 163.83	**5.900** 149.86	—	—	535919-7
	390	**7.230** 183.64	**6.950** 176.53	**6.400** 162.56	—	—	535919-8
	420	**7.730** 196.34	**7.450** 189.23	**6.900** 175.26	—	—	535919-9
	450	**8.230** 209.04	**7.950** 201.93	**7.400** 187.96	—	—	1-535919-0

No. of Guides	No. of Positions	Dimensions A	B	C	D	E	Part Numbers
0	480	**8.730** 221.74	**8.450** 214.63	**7.900** 200.66	—	—	1-535919-3
	540	**9.730** 247.14	**9.450** 240.03	**8.900** 226.06	—	—	1-535919-1
	600	**10.730** 272.54	**10.450** 265.43	**9.900** 251.46	—	—	1-535919-2
1	480	**9.030** 229.36	**8.750** 222.25	**3.900** 99.06	**4.375** 111.13	—	650362-1
	540	**10.030** 254.76	**9.750** 247.65	**4.400** 111.76	**4.875** 123.83	—	650362-2
	600	**11.030** 280.16	**10.750** 273.05	**4.900** 124.46	**5.375** 136.25	—	650362-3
	660	**12.030** 305.56	**11.750** 298.45	**5.400** 137.16	**5.875** 149.23	—	650362-4
2	720	**13.350** 339.09	**13.050** 331.47	**3.900** 99.06	**4.395** 111.63	**4.300** 109.22	650363-1
	810	**14.850** 377.19	**14.550** 369.57	**4.400** 111.76	**4.875** 123.83	**4.800** 121.92	650363-2

For complete product information, order Catalog 82618

Products for Industrial & Commercial Applications
Dimensions are shown for reference purposes only.
Dimensions are in inches and millimeters unless otherwise specified. Values in brackets are metric equivalents.
Specifications subject to change.
Technical Support Center
1-800-522-6752
www.tycoelectronics.com

Guidance, Power and Keying Hardware Applications

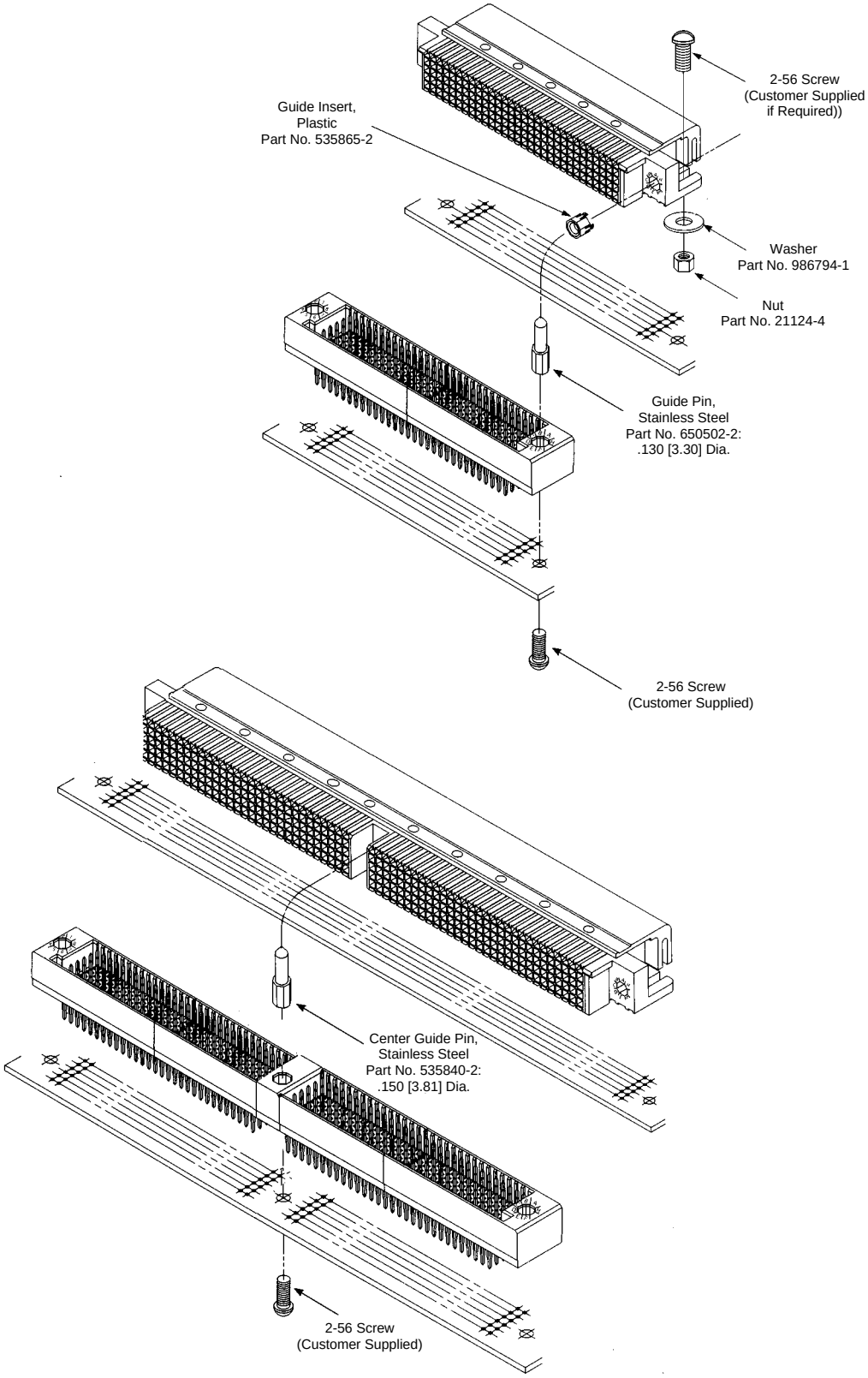

Note: Recommended screws for .093 [2.36] to .125 [3.18] thick boards are stainless steel No. 2-56 binding head screws .375 [9.53] long.

For complete product information, order Catalog 82618

Products for Industrial & Commercial Applications
Dimensions are shown for reference purposes only.
Dimensions are in inches and millimeters unless otherwise specified. Values in brackets are metric equivalents.
Specifications subject to change.
Technical Support Center
1-800-522-6752
www.tycoelectronics.com

Guidance, Power and Keying Hardware Applications

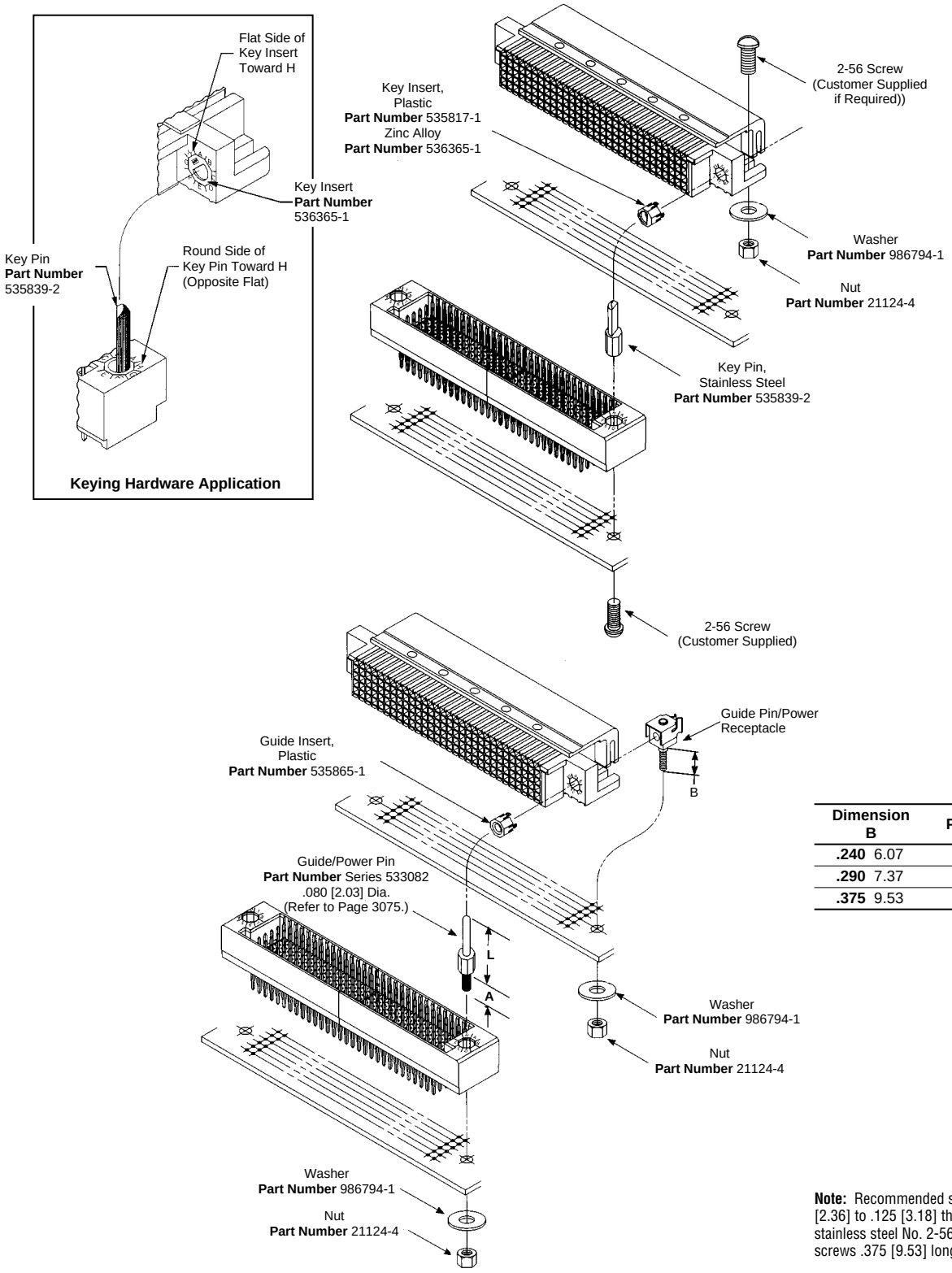

Dimension B	Part Numbers
.240 6.07	535875-1
.290 7.37	535875-2
.375 9.53	535875-3

Note: Recommended screws for .093 [2.36] to .125 [3.18] thick boards are stainless steel No. 2-56 binding head screws .375 [9.53] long.

For complete product information, order Catalog 82618

Products for Industrial & Commercial Applications
Dimensions are shown for reference purposes only.
Dimensions are in inches and millimeters unless otherwise specified. Values in brackets are metric equivalents.
Specifications subject to change.
Technical Support Center 1-800-522-6752 www.tycoelectronics.com

Product Facts

- **Meets DIN 41612 and IEC 603-2**
- **Polarized housings**
- **Standard DIN sizes as well as half sizes, and expanded sizes**
- **AMP ACTION PIN post assemblies for reliability and economical motherboard assembly**
- **Recognized under the Component Program of Underwriters Laboratories Inc., File No. E28476**
- **Certified by Canadian Standards Association, File No. LR 7189**

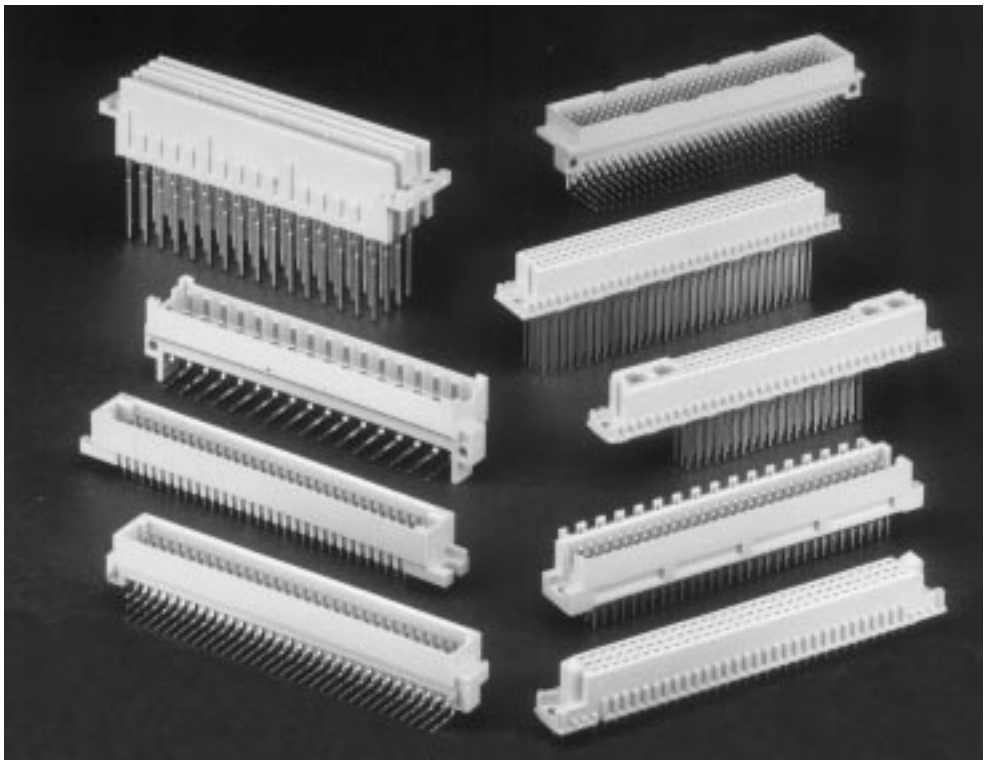

AMP Eurocard Connectors meet DIN 41612 and IEC 603-2 specifications.

The application for the Eurocard connectors is a two-piece backplane connector for low to mid range networking gear. These connectors are flame retardant and are available in Types C, F, M, and R. They have various solder post lengths, and selective contact loading.

Eurocard Connectors for Common Bus System Application

The Eurocard Connectors listed below provide high reliability and economy in packages compatible with the industry standard for printed circuit board computer backplane bus system application.

Common Bus Systems	AMP Eurocard Connectors	Part Numbers		Page Numbers
		Pin	Receptacle	
VMEbus	Type C, 96 Position	650473-5	535043-5	3091, 3092
VME64X	160 Position	—	148452-5 1-148495-5	3096

Electrical Data:

Current Rating (signal contacts) — 1.5 Amperes

Contact Resistance — 20 milliohms max.

Lower Shield Inductance — <10 nanohenries

Lower Shield Resistance — <10 milliohms

Upper Shield Inductance — <20 nanohenries

Upper Shield Resistance — <10 milliohms

DIN 41612 Performance Levels

The following performance requirements are for Levels I, II and III of the DIN 41612 specification. Refer to Test Report 501-170 for AMP Eurocard Connector Level II test results.

	Level I	Level II	Level III
Test Batch P			
Dimensional Check	Yes	Yes	Yes
Contact Resistance	20 milliohms	20 milliohms	—
Insulation Resistance	1 E 12 ohms	1 E 12 ohms	1 E 11 ohms
Dielectric Strength	1000 V	1000 V	1000 V
Test Batch AP			
Withdrawal Force (Single Pin)	0.15 N [.54 oz] Min.	0.15 N [.54 oz] Min.	0.15 N [.54 oz] Min.
Mating and Unmating Force (96 Pos.)	90.7 N [20.4 lb] Max.	90.7 N [20.4 lb] Max.	90.7 N [20.4 lb] Max.
Solderability	Yes	Yes	Yes
Dielectric Strength	1000 V	1000 V	—
Vibration	10-2000 Hz, 20G	10-500 Hz, 6G	—
Shock	490 m/s^2 (50G)	—	—
Acceleration	980 m/s^2	—	—
Rapid Temperature Change	-55°C, +125°C	-55°C, +125°C	—
Insulation Resistance	1 E 12 ohms	1 E 12 ohms	—
Dielectric Strength	1000 V	1000 V	—
Visual Examination	Yes	Yes	Yes
Climatic Sequence	5 cycles	5 cycles	—
Dry Heat	+125°C, 16 hours	+125°C, 16 hours	+125°C, 16 hours
Insulation Resistance (During Dry Heat)	1 E 11 ohms	1 E 11 ohms	1 E 10 ohms
Humid Heat	+55°C	+40°C	—
Cold	-55°C	-55°C	-55°C
Partial Vacuum	300M bar	300M bar	—
Dielectric Strength	300 V	300 V	—
Humid Heat	+55°C	+40°C	—
Insulation Resistance	1 E 10 ohms	1 E 10 ohms	1 E 9 ohms
Contact Resistance	20 milliohms	20 milliohms	20 milliohms
Dielectric Strength	1000 V	1000 V	—
Mating and Unmating	90.7 N [20.4 lb]	90.7 N [20.4 lb]	90.7 N [20.4 lb]
Visual Examination	Yes	Yes	Yes
Test Batch BP			
Withdrawal Force	0.15 N [.54 oz]	0.15 N [.54 oz]	0.15 N [.54 oz]
Durability	250 cycles	200 cycles	50 cycles
Industrial Atmosphere	21 days SO2	4 days SO2	—
Contact Resistance	20 milliohms	20 milliohms	—
Durability	250 cycles	200 cycles	—
Insulation Resistance	1 E 12 ohms	1 E 12 ohms	—
Dielectric Strength	1000 V	1000 V	—
Withdrawal Force	0.15 N [.54 oz]	0.15 N [.54 oz]	0.15 N [.54 oz]
Visual Examination	Yes	Yes	Yes
Static Axial Force	90 N [20.25 lb]	—	—
Test Batch CP			
Humid Heat	56 days	56 days	—
Insulation Resistance	1 E 10 ohms	1 E 10 ohms	—
Contact Resistance	20 milliohms	20 milliohms	—
Dielectric Strength	1000 V	1000 V	—
Visual Examination	Yes	Yes	—
Test Batch DP			
Durability	250 cycles	200 cycles	—
Electric Load at High Temperature	1 ampere at 70°C	1 ampere at 70°C	—
Contact Resistance	20 milliohms	20 milliohms	—
Dielectric Strength	1000 V	1000 V	—
Discharge Voltage	1000 V	1000 V	—
Visual Examination	Yes	Yes	—
Test Batch EP			
Mechanical Strength of Terminals	20 N [4.5 lb]	20 N [4.5 lb]	—
Contact Mount in Use	10 N [2.25 lb]	10 N [2.25 lb]	—
Growth of Mold	Yes	—	—
Visual Examination	Yes	—	—
Combustibility	10 sec burning	—	—

For complete product information, order Catalog 1307515

Overview of Eurocard Connector System

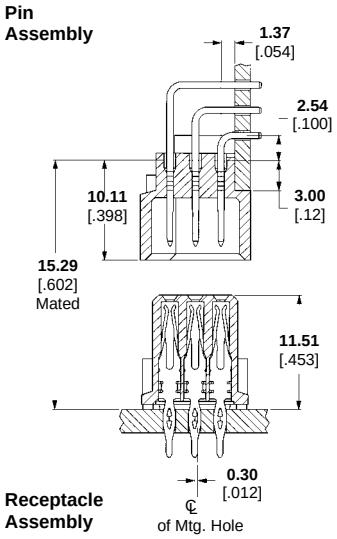

Types C and M, 3 Row Connector Systems

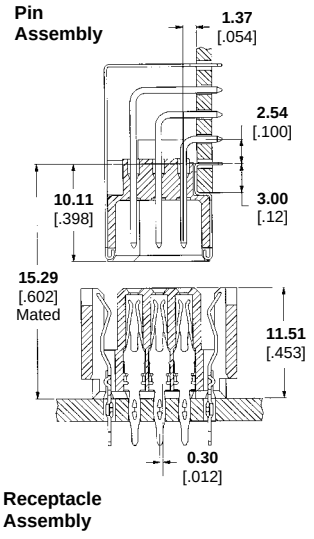

Enhanced Type C, 3 Row Connector System

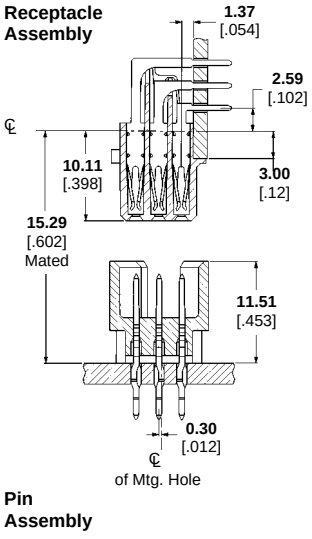

Type R, 3 Row Connector System

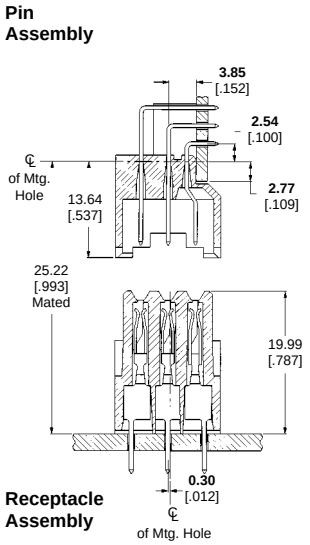

Type F, 3 Row Connector System

		Type C/Enhanced Type C (Signal Contacts)** /Type M (Signal Contacts)	Type R	Type F
Number of Positions (Max.)		96	96	48
Row Levels		A, B & C A & C	A, B & C	Z, B, & D
Grid in inches fully loaded (Pitch and row distance)	Receptacle Assembly	**2.54 x 2.54** [.100 x .100]	**2.54 x 2.54** [.100 x .100]	**5.08 X 5.08** [.200 X .200]
	Pin Assembly	**2.54 x 2.54** [.100 x .100]	**2.54 x 2.54** [.100 x .100]	**5.08 X 2.54** [.200 X .100]†
Minimum adjacent mounting space required		**12.7** [.500]	**12.7** [5.00]	**15.2** [.600]
Performance Specifications:				
Current Rating		Per DIN 41612*		Per DIN 41612*
Voltage Rating		250 VAC	250 VAC	250 VAC
Dielectric Rating		1000 VAC/1.55 KV maximum	1000 VAC	1.55 KV max.
Contact Resistance		15 milliohms initial at 100 ma and 50 mv, open circuit	15 milliohms initial at 100 ma and 50 mv, open circuit	15 milliohms
Insulation Resistance		10^6 megohms after temperature cycling environment		10^6 megohms after temperature cycling environment
Temperature Rating		-55°C to +125°C, except EUROLATCH Connectors, +105°C max.		-55°C to +125°C
Durability		Per DIN 41612, Level I, II or III		Per DIN 41612, Level I, II or III
Mating Force		Less than **0.94 N** [3.4 oz] Avg. per contact		Less than **0.94 N** [3.4 oz] Avg. per contact
Unmating Force		**0.15 N** [.54 oz] min. per contact after three mating cycles		**0.15 N** [.54 oz] min. per contact after three mating cycles

*See derating curve on next page.
**For additional electrical data, see page 3085.
†At solder side.

Mixed Styles

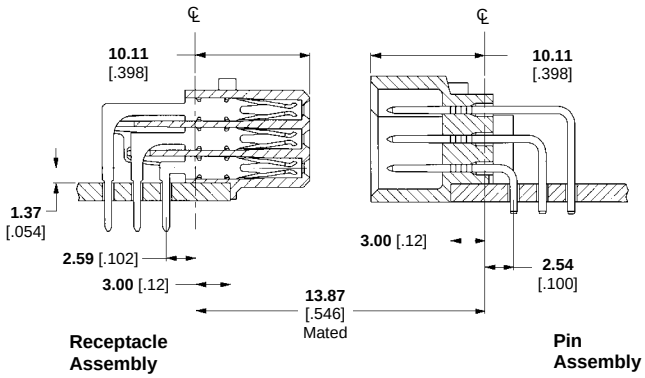

3 Row
Type R Receptacle Assembly,
Type C Pin Assembly
(See Note below)

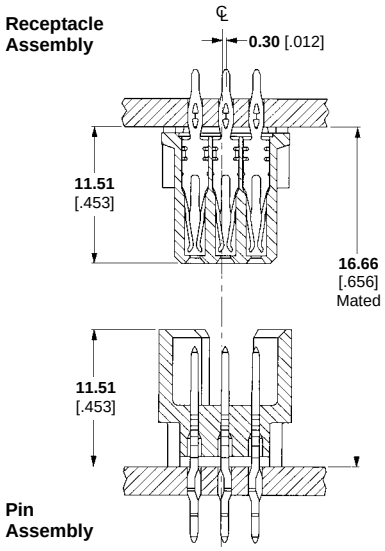

3 Row
Type C Receptacle Assembly,
Type R Pin Assembly
(See Note below)

Note: When connector styles are mixed (Types C and R), the connector circuit numbers will not match; for example, position A1 of the pin assembly will mate with position A32 of the receptacle assembly.

Current Carrying Capacity and Mating Conditions

Current Carrying Capacity (All Contacts Energized in Housing)

Additional derating is recommended when paralleling contacts for power.

Types C and R per DIN 41612

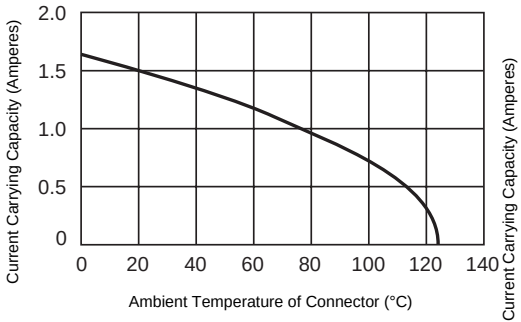

Type F per DIN 41612

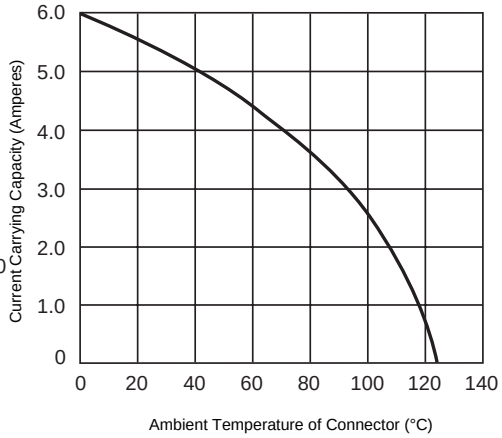

Mating Conditions

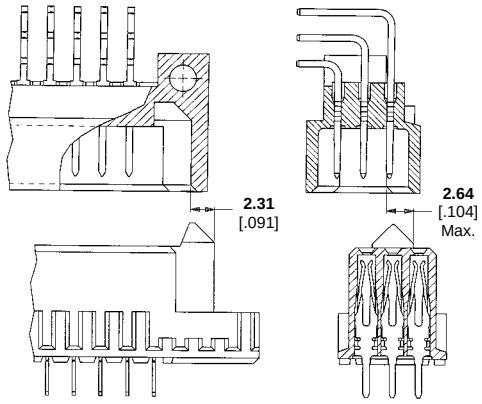

Eurocard Connector with Guide Features

For complete product information, order Catalog 1307515

Products for Industrial & Commercial Applications

Dimensions are shown for reference purposes only.

Dimensions are in inches and millimeters unless otherwise specified. Values in brackets are metric equivalents.

Specifications subject to change.

Technical Support Center
1-800-522-6752
www.tycoelectronics.com

Current Carrying Capacity and Mating Conditions

Mating Conditions (Continued)

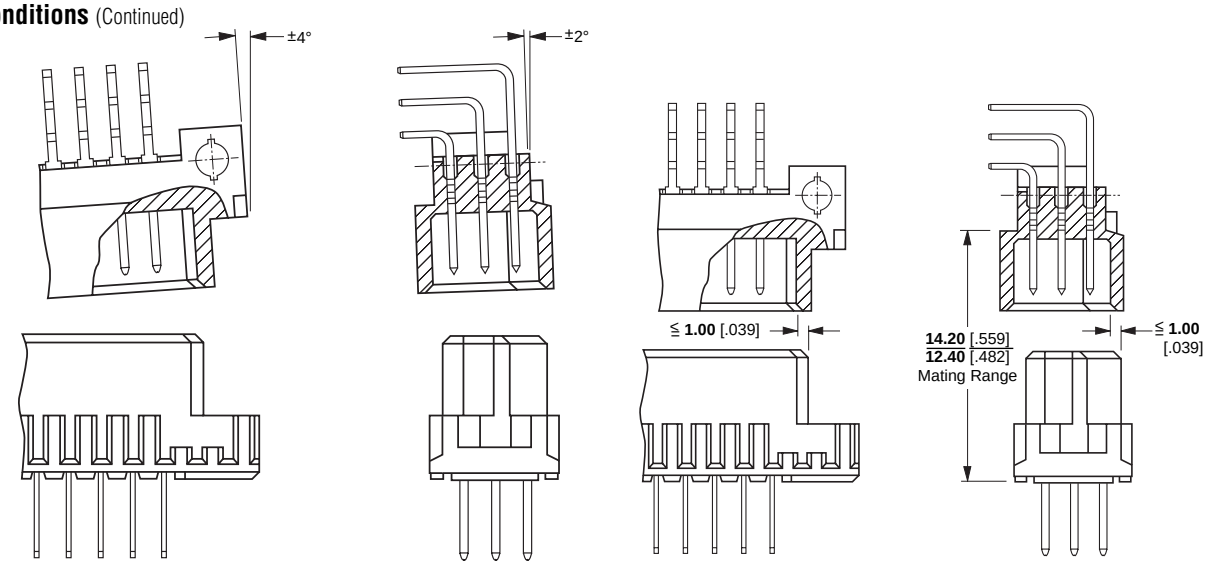

MFBL (Make First/Break Last) Connector System

Tyco Electronics offers MFBL Eurocard pin assemblies in both vertical and right angle styles. The MFBL concept is achieved by loading a connector with staggered length pins. The long pins make contact first during connector mating, and break last during unmating. Tyco Electronics recommends the use of 4.93 [.194] high pins for MFBL positions and 4.17 [.164] high pins for signal positions. Also, Tyco Electronics offers a 5.69 [.224] long mating post. However, it exceeds the lead-in envelope of the housing and is susceptible to stubbing on the receptacle mating face.

Type R Eurocard MFBL pin assemblies are available with either ACTION PIN posts or solder posts. For press-fit MFBL applications, Tyco Electronics offers a connector with contacts of all one height which is pressed into a board using the Tyco Electronics patented programmable tool. This allows the customer to buy a standard connector and configure the tool to the specific MFBL sequence required. For a description of the use of this tool, request AMP Instruction Sheet 408-9894.

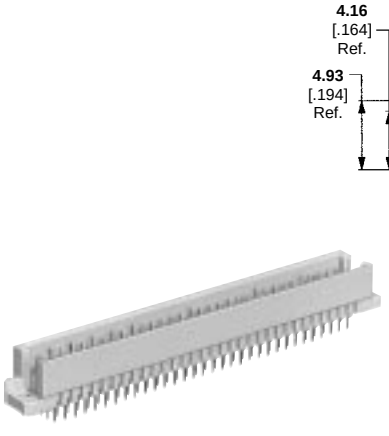

Type R

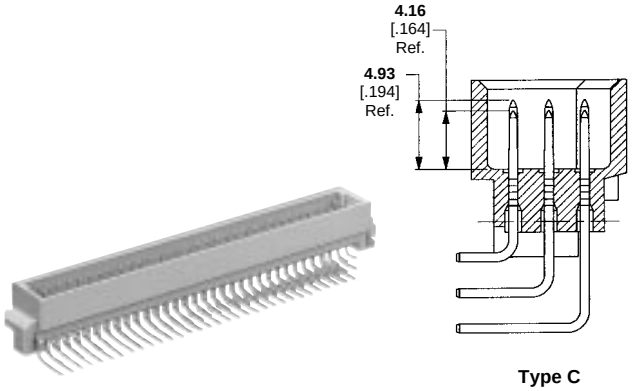

Type C

For complete product information, order Catalog 1307515

Products for Industrial & Commercial Applications

Dimensions are shown for reference purposes only.

Dimensions are in inches and millimeters unless otherwise specified. Values in brackets are metric equivalents.

Specifications subject to change.

Technical Support Center
1-800-522-6752
www.tycoelectronics.com

MFBL (Make First/Break Last) Connector System

Type C Pin Assemblies

No. of Positions	Rows Loaded*	DIN Level	Part Numbers*
96	—	II	536437
			148123**
			536366[1]
			148330*[2]
48	—	II	148019
			536751[1]
120	—	II	148002
			148032[1]

*Refer to customer drawing for specific loading patterns and part numbers.
**Three levels of sequencing.
[1] With Boardlocks
[2] Reverse Polarized

Type R Pin Assemblies, 4.57 [.180] Solder Post Length

No. of Positions	Rows Loaded*	DIN Level	Part Number*
96	—	II	536744

*Refer to customer drawing for specific loading patterns and part numbers.

Type R Pin Assemblies, 6.35 [.250] ACTION PIN (Press-Fit) Post Length, Programmable

(for 2.36 [.093] Min. Thick PC Board)

No. of Positions	Rows Loaded	DIN Level	Part Numbers
96	A,B,C	II	536019-5
64	A,C	II	536098-5
48	A,B,C	II	536092-5
32	A,C	II	536100-5
120	A,B,C	II	536094-5
150	A,B,C	II	536096-5

Type R Pin Assemblies, Eye of the Needle Compliant Pin, 4.06 [.160] Post Length, Programmable

No. of Positions	Rows Loaded	DIN Level	Part Numbers
48	A,B,C	II	148472-4
64	A,C	II	148553-4
96	A,B,C	II	148304-4
120	A,B,C	II	148389-4
150	A,B,C	II	148306-4

Type R Pin Assemblies, 13.23 [.521] ACTION PIN (Press-Fit) Post Length, Programmable

(for 2.36 [.093] Min. Thick PC Board)

No. of Positions	Rows Loaded	DIN Level	Part Numbers
96	A,B,C	II	536067-5
64	A,C	II	536099-5
48	A,B,C	II	536093-5
32	A,C	II	536101-5
120	A,B,C	II	536095-5
150	A,B,C	II	536097-5

For complete product information, order Catalog 1307515

Products for Industrial & Commercial Applications
Dimensions are shown for reference purposes only.
Dimensions are in inches and millimeters unless otherwise specified. Values in brackets are metric equivalents.
Specifications subject to change.
Technical Support Center 1-800-522-6752 www.tycoelectronics.com

Type C Right-Angle Pin Assemblies with Solder Posts (with and without Boardlocks)

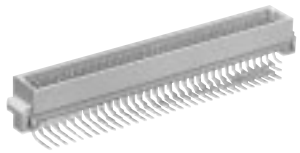

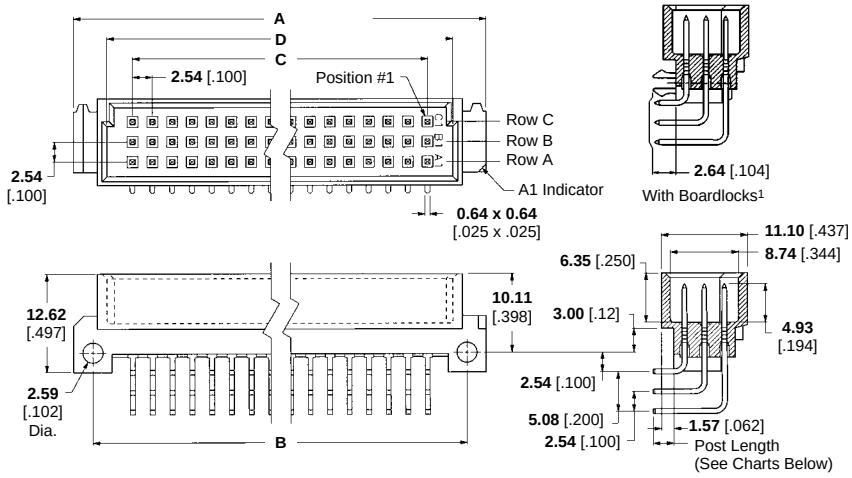

Material:

Housing — Polyester, grey, 94V-0 rated

Contacts and Boardlocks — Brass

DIN II Plating — Meets performance requirements of DIN Level II.

Related Product Data:

DIN Performance Levels — page 3086

Performance Specifications — page 3087

Mateable Connectors — pages 3092, 3102, 3103

Technical Documents:

DIN Specification
41612

IEC Specification
603-2

Application Specification
114-9014

Instruction Sheet
408-6784

Standard Size

No. of Positions	Rows Loaded	Dimensions A	B	C	D	DIN Levels	Part Numbers 2.64 [.104] Post Length	3.30 [.130] Post Length	4.57 [.180] Post Length
96	A,B,C	**93.98** 3.700	**88.90** 3.500	**78.74** 3.100	**85.29** 3.358	II	650473-5	650947-5	148116-5
							650913-5[1]	536405-5[1]	—
							536010-5[2]	536742-5[2]	—
							536416-5[1,2]	—	—
						III	650473-9	650947-9	—
64	A,C	**93.98** 3.700	**88.90** 3.500	**78.74** 3.100	**85.29** 3.358	II	650945-5	650951-5	148117-5
							536356-5[1]	536406-5[1]	—
							536011-5[2]	—	—
						III	650945-9	—	—
							148511-5[1,2]	—	—

[1] With Boardlocks
[2] High Temperature Housing

Half Size

No. of Positions	Rows Loaded	Dimensions A	B	C	D	DIN Levels	Part Numbers 2.64 [.104] Post Length	3.30 [.130] Post Length
48	A,B,C	**53.34** 2.100	**48.26** 1.900	**38.10** 1.500	**44.65** 1.758	II	650478-5	650948-5
							650916-5[1]	536407-5[1]
							536012-5[2]	—
							148020-5[1,2]	—
						III	650478-9	—
32	A,C	**53.34** 2.100	**48.26** 1.900	**38.10** 1.500	**44.65** 1.758	II	640946-5	—
							650978-5[1]	536408-5
							536013-5[2]	—

[1] With Boardlocks
[2] High Temperature Housing

Expanded Size

No. of Positions	Rows Loaded	Dimensions A	B	C	D	DIN Levels	Part Numbers 2.64 [.104] Post Length	3.30 [.130] Post Length
120	A,B,C	**114.30** 4.500	**109.22** 4.300	**99.06** 3.900	**105.61** 4.158	II	650906-5	650949-5
							650914-5[1]	536409-5[1]
							536413-5[1,2]	536741-5[2]
						III	—	650949-9
150	A,B,C	**139.70** 5.500	**134.62** 5.300	**124.46** 4.900	**130.01** 5.158	II	650907-5	650950-5
							650915-5[1]	536410-5[1]
							536414-5[1,2]	—

[1] With Boardlocks
[2] High Temperature Housing
Note: Select load and MFBL available upon request, contact Product Engineering.

For complete product information, order Catalog 1307515

Products for Industrial & Commercial Applications

Dimensions are shown for reference purposes only.

Dimensions are in inches and millimeters unless otherwise specified. Values in brackets are metric equivalents.

Specifications subject to change.

Technical Support Center
1-800-522-6752
www.tycoelectronics.com

Type C Vertical Receptacle Assemblies with Solder Posts for PC Board Mount



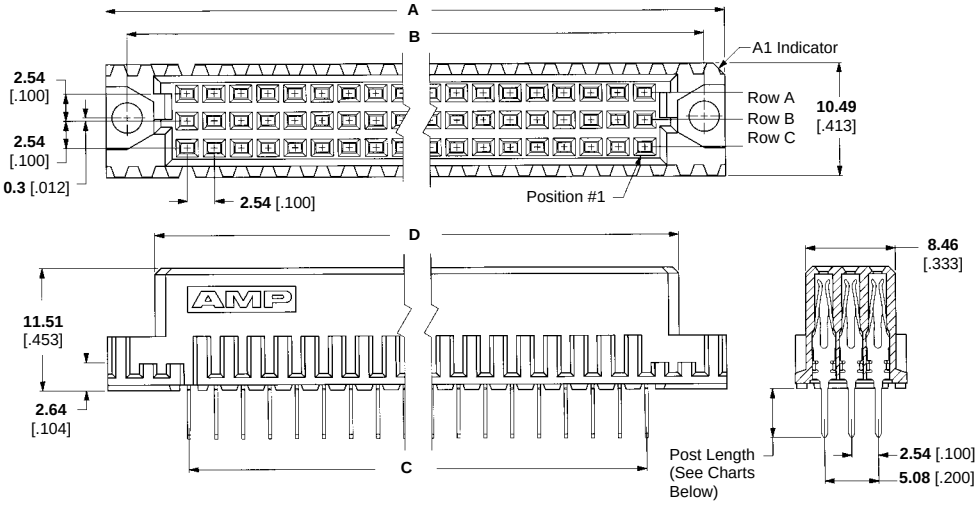

Material:

Housing — Polyester, grey, 94V-0 rated

Contacts — Phosphor bronze

DIN II Plating — Meets performance requirements of DIN Level II.

Related Product Data:

DIN Performance Levels — page 3086

Performance Specifications — page 3087

Mateable Connectors — pages 3091, 3102, 3103

Technical Documents:

DIN Specification
41612

IEC Specification
603-2

Application Specification
114-9014

Instruction Sheet
408-6784

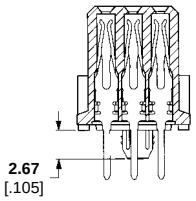

With Boardlocks[1]

Standard Size

No. of Positions	Rows Loaded	Dimensions A	B	C	D	DIN Levels	Part Numbers 2.49 [.098] Post Length	3.30 [.130] Post Length	4.57 [.180] Post Length
96	A,B,C	**93.98** 3.700	**90.00** 3.543	**78.74** 3.100	**85.00** 3.346	II	535089-5	535090-5	535043-5
							—	535090-4[2]	535043-4[2]
							536418-5[1]	650963-5[1]	536412-5[1]
							—	650963-4[2,1]	536412-4[2,1]
						III	535089-9	535090-9	535043-9
64	A,C	**93.98** 3.700	**90.00** 3.543	**78.74** 3.100	**85.00** 3.346	II	650458-5	650956-5	650408-5
							—	—	650408-4[2]
							536481-5[1]	650983-5	536756-5
						III	650458-9	—	—

[1] With Boardlocks
[2] Contact Plating: .000030 Gold in mating area, Tin Lead on tails, All over .000050 Nickel.

Half Size

No. of Positions	Rows Loaded	Dimensions A	B	C	D	DIN Levels	Part Numbers 2.49 [.098] Post Length	3.30 [.130] Post Length	4.57 [.180] Post Length
48	A,B,C	**53.34** 2.100	**49.37** 1.944	**38.10** 1.500	**44.35** 1.746	II	535091-5	535070-5	535071-5
							148521-5	535070-4[2]	535071-4[2]
							536397-5[1]	536484-5[1]	536485-5[1]
						III	535091-9	—	535071-9
32	A,C	**53.34** 2.100	**49.37** 1.944	**38.10** 1.500	**44.35** 1.746	II	650459-5	—	650466-5
							—	—	650466-4[2]
							536486-5[1]	536487-5[1]	536488-5[1]

[1] With Boardlocks
[2] Contact Plating: .000030 Gold in mating area, Tin Lead on tails, All over .000050 Nickel.

Expanded Size

No. of Positions	Rows Loaded	Dimensions A	B	C	D	DIN Levels	Part Numbers 2.49 [.098] Post Length	3.30 [.130] Post Length	4.57 [.180] Post Length
120	A,B,C	**114.30** 4.500	**110.31** 4.343	**99.06** 3.900	**105.31** 4.146	II	535097-5	535098-5	535099-5
							—	535098-4[2]	—
							536489-5[1]	536494-5[1]	536490-5[1]
						III	535097-9	535098-9	—
150	A,B,C	**139.70** 5.500	**135.71** 5.343	**124.46** 4.900	**130.71** 5.146	II	650404-5	650405-5	650406-5
							536491-5[1]	536492-5[1]	536493-5[1]

[1] With Boardlocks
[2] Contact Plating: .000030 Gold in mating area, Tin Lead on tails, All over .000050 Nickel.

For complete product information, order Catalog 1307515

Products for Industrial & Commercial Applications

Dimensions are shown for reference purposes only.

Dimensions are in inches and millimeters unless otherwise specified. Values in brackets are metric equivalents.

Specifications subject to change.

Technical Support Center
1-800-522-6752
www.tycoelectronics.com

Type C Vertical Receptacle Assemblies with ACTION PIN Posts for the PC Board Mount (0.30 x 0.61[.012 x .024])



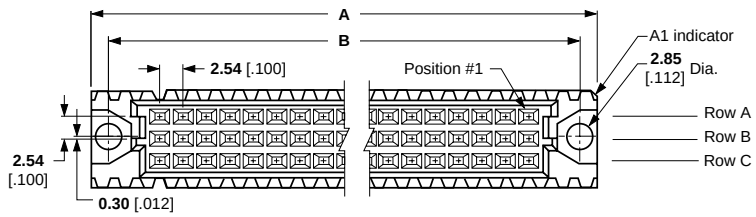

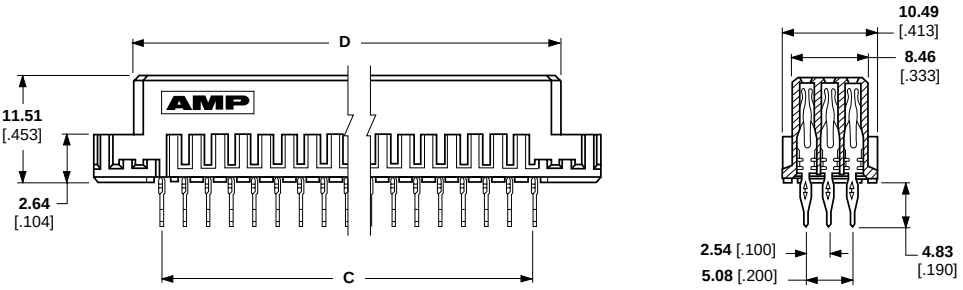

Material:

Housing — Polyester, grey, 94V-0 rated

Contacts — Phosphor bronze

DIN II Plating — Meets performance requirements of DIN Level II.

Related Product Data:

DIN Performance Levels — page 3086

Performance Specifications — page 3087

Mateable Connectors — pages 3091, 3101

Application Tooling — pages 3109

Technical Documents:

DIN Specification 41612

IEC Specification 603-2

Application Specification 114-9014

Instruction Sheet 408-6927

Standard Size (for PC Board Thicknesses 1.57 [.062] and Above)

No. of Positions	Rows Loaded	Dimensions A	B	C	D	DIN Levels	Part Numbers
96	A,B,C	**93.98** 3.700	**90.00** 3.543	**78.74** 3.100	**85.00** 3.346	II	535032-5
							535032-4[2]
							535056-5[1]
							535056-4[2]
						III	535032-9
64	A,C	**93.98** 3.700	**90.00** 3.543	**78.74** 3.100	**85.00** 3.346	II	535059-5
							535059-4[2]
						III	535059-9

[1] Without mounting ears.
[2] Contact Plating: .000030 Gold in mating area, Tin Lead on tails, All over .000050 Nickel.

Half Size (for PC Board Thicknesses 1.57 [.062] and Above)

No. of Positions	Rows Loaded	Dimensions A	B	C	D	DIN Levels	Part Numbers
48	A,B,C	**53.34** 2.100	**49.37** 1.944	**38.10** 1.500	**44.35** 1.746	II	535034-5
							535034-4[2]
						III	535034-9
32	A,C	**53.34** 2.100	**49.37** 1.944	**38.10** 1.500	**44.35** 1.746	II	535068-5

Expanded Size (for PC Board Thicknesses 1.57 [.062] and Above)

No.r of Positions	Rows Loaded	Dimensions A	B	C	D	DIN Levels	Part Numbers
120	A,B,C	**114.30** 4.500	**110.31** 4.343	**99.06** 3.900	**105.31** 4.146	II	535079-5
150	A,B,C	**139.70** 5.500	**135.71** 5.343	**124.46** 4.900	**130.71** 5.146	II	535080-5

Note: Connectors on this page are toolless (flat rock).
When they are installed using an SM-3 Machine a spacer of 26.67 [1.050] is needed to make up height difference.

For complete product information, order Catalog 1307515

Products for Industrial & Commercial Applications

Dimensions are shown for reference purposes only.

Dimensions are in inches and millimeters unless otherwise specified. Values in brackets are metric equivalents.

Specifications subject to change.

Technical Support Center
1-800-522-6752
www.tycoelectronics.com

Type C Vertical Receptacle Assemblies with ACTION PIN Posts for PC Board Mount (0.64[.025] Square)



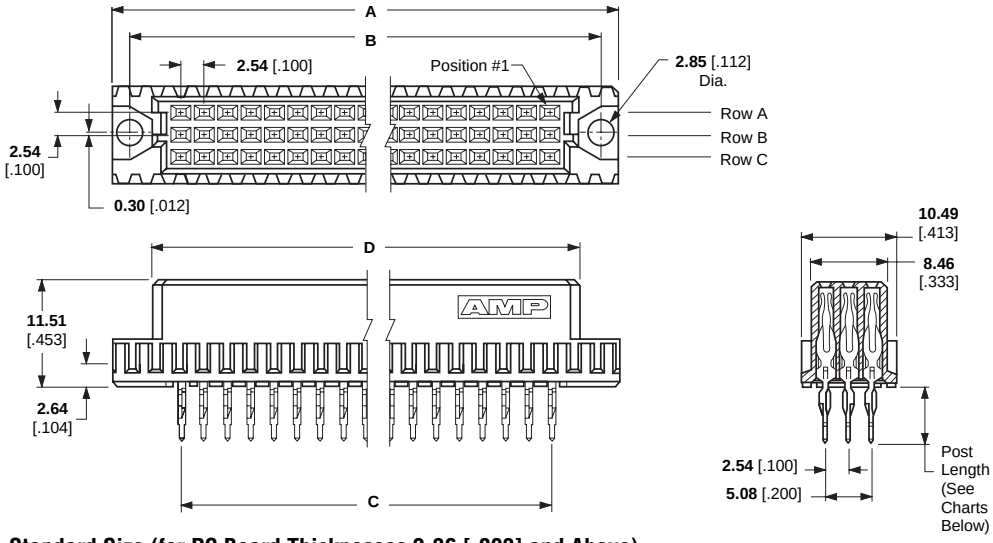

Material:

Housing — Polyester, grey, 94V-0 rated

Contacts — Phosphor bronze

DIN II Plating — Meets performance requirements of DIN Level II.

DIN III Plating — Meets performance requirements of DIN Level III.

Related Product Data:

DIN Performance Levels — page 3086

Performance Specifications — page 3087

Mateable Connectors — pages 3091, 3101, 3102

Application Tooling — page 3109

Technical Documents:

DIN Specification
41612

IEC Specification
603-2

Application Specification
114-9014

Instruction Sheets
408-6927, 408-9623

Standard Size (for PC Board Thicknesses 2.36 [.093] and Above)

No. of Positions	Rows Loaded	Dimensions A	B	C	D	DIN Levels	Part Numbers 13 [.512] Post Length	17 [.669] Post Length
96	A,B,C	**95.00** 3.740	**90.00** 3.543	**78.74** 3.100	**85.00** 3.346	II	215912-4[3]	215614-4[3]
							1-215912-4[1,3]	1-215614-4[1,3]
							148057-5[2]	148059-5[2]
							1-148057-5[1,2]	1-148059-5[1,2]
							1-148057-4[1,2]	—
						III	215912-8	—
							1-215912-8[1]	1-215614-8[1]
64	A,C	**95.00** 3.740	**90.00** 3.543	**78.74** 3.100	**85.00** 3.346	II	215913-4[3]	215781-4[3]
							148167-5	—
							1-215913-4[1,3]	1-215781-4[1,3]
							1-148167-5[1,2]	—
							1-148167-4[1,2]	—
						III	215913-8	215781-8
							1-215913-8[1]	1-215781-8[1]
48	A, B, C	**53.34** 2.100	**49.37** 1.944	**38.10** 1.500	**44.35** 1.746	—	148502-5	—

Standard Size (for 1.57 [.062] PC Board Thickness)

No. of Positions	Rows Loaded	Dimensions A	B	C	D	DIN Levels	Part Numbers 13 [.512] Post Length	17 [.669] Post Length
96	A,B,C	**95.00** 3.740	**90.00** 3.543	**78.74** 3.100	**85.00** 3.346	II	215950-4[3]	215783-4[3]
							1-215950-4[1,3]	1-215783-4[1,3]
							148057-5[2]	148059-5[2]
							1-148057-5[1,2]	1-148059-5[1,2]
							1-148057-4[1]	—
						III	215950-8	215783-8
							1-215950-8[1]	1-215783-8[1]
64	A,C	**95.00** 3.740	**90.00** 3.543	**78.74** 3.100	**85.00** 3.346	II	215951-4[3]	—
							148167-5[2]	—
							1-215951-4[1]	—
							1-148167-5[1,2]	—
							1-148167-4[1,2,3]	—
						III	215951-8	215784-8
							1-215951-8[1]	1-215784-8[1]

[1] Precious metal plating in contact area and for 5.08 [.200] from tip of post; gold flash on remainder of post.
[2] Toolless (flat rock) connectors.
[3] .000030 Gold plating in contact mating area, Tin Lead on tails (unless otherwise specified), all over .000050 Nickel.
Note: Seating tool required, unless specified otherwise.

For complete product information, order Catalog 1307515

Products for Industrial & Commercial Applications

Dimensions are shown for reference purposes only.

Dimensions are in inches and millimeters unless otherwise specified. Values in brackets are metric equivalents.

Specifications subject to change.

Technical Support Center
1-800-522-6752
www.tycoelectronics.com

Type C Enhanced VME64X (J1, J2)

Product Facts

- Compatible with existing type C DIN 41612 connectors and VME bus applications
- Additional low inductance, low resistance grounds
- Lowers common mode noise
- Press-fit ACTION PIN contacts eliminate need for soldering on backplane
- Recognized under the Component Program of Underwriters Laboratories Inc., File No. E28476
- Certified by Canadian Standards Association, File No. LR 7189

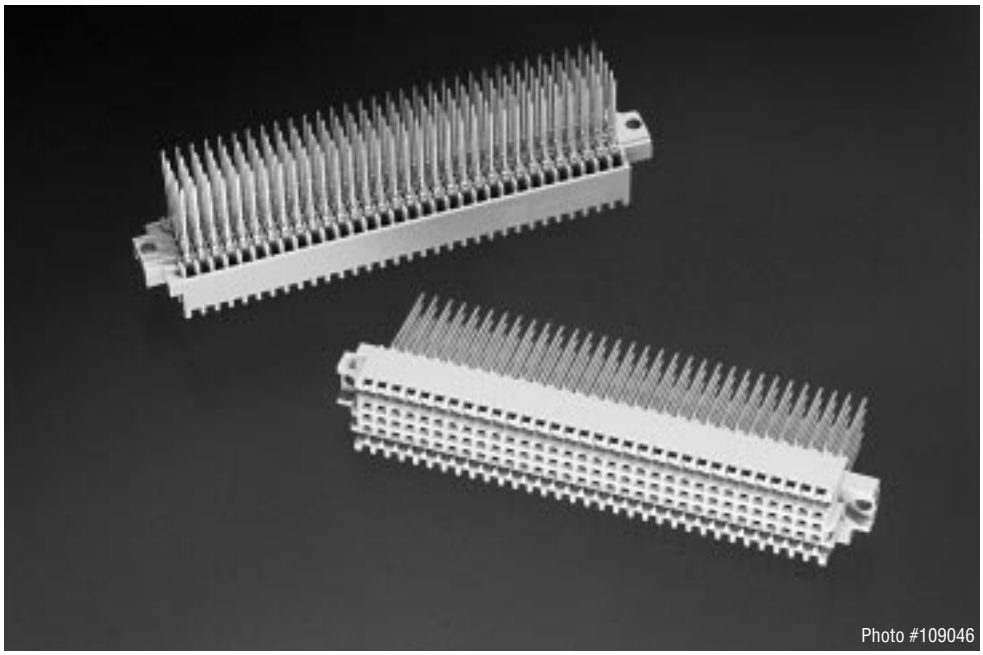

Photo #109046

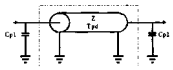

AMP Single Line and Multi Line Models are available for Eurocard (DIN) connectors at www.amp.com/simulation, or by requesting CD#1307568.

Taking advantage of higher logic speeds to increase performance of computer systems, VME designers find themselves faced with problems such as common mode noise, crosstalk and limited I/O between daughter cards and the backplane.

The Enhanced Eurocard connector provides additional grounds while maintaining the standard Eurocard connector interface. Also, the Enhanced Eurocard connector substantially lowers common mode noise, permitting designers to use faster logic families.

The Enhanced Eurocard connector is cost competitive and provides superior electrical performance, while maintaining the downward compatibility to standard VME daughter cards.

The Enhanced Eurocard connector is made to upgrade existing systems with minimal design change. They contain the make-first/break-last contacts which provide ESD protection. The pin headers feature high temperature plastic housings and are compatible with vapor phase and IR solder reflow process. The Enhanced Eurocard connectors also feature boardlocks that provide hold-down during soldering process.

Type C Enhanced Vertical Receptacle Assemblies VME64X ACTION PIN Contacts

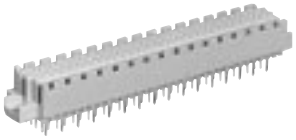

Part Number 148452-5 **Shown**

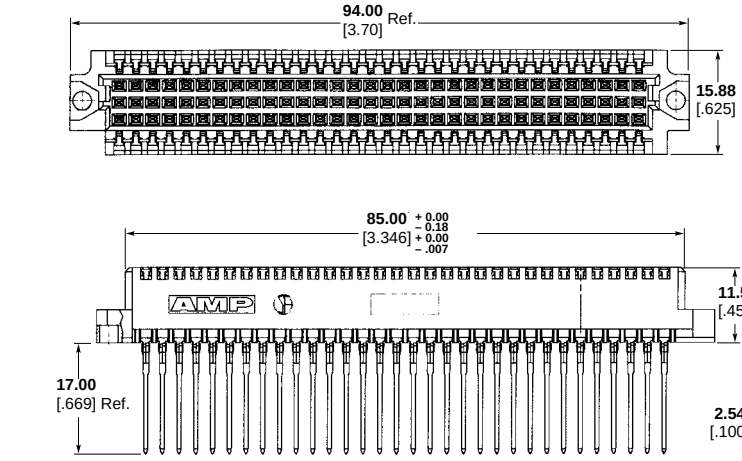

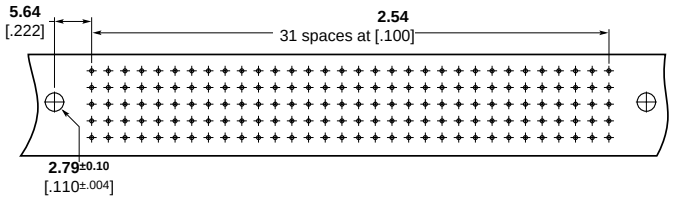

Material:

Housing — Thermoplastic, glass-filled, grey, 94V-0 rated

Receptacle Contacts — Phosphor bronze

Ground Contacts — Phosphor bronze

DIN II Plating — Meets performance requirements of DIN Level II.

Related Product Data:

Electrical/Mechanical Data — page 3087

No. of Positions	Rows Loaded	DIN Levels	ACTION PIN Contacts	
			6.00 [.236]	17.00 [.669]
160	A, B, C	II	148452-5	1-148445-5

Shroud

PCB Thickness	Part Number
.125 .005	148527-1
.150 .006	148527-2

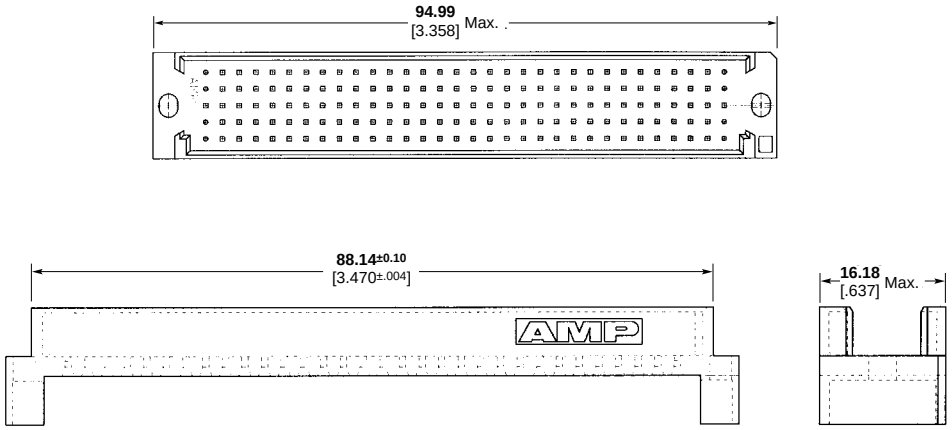

For complete product information, order Catalog 1307515

Products for Industrial & Commercial Applications

Dimensions are shown for reference purposes only.

Dimensions are in inches and millimeters unless otherwise specified. Values in brackets are metric equivalents.

Specifications subject to change.

Technical Support Center
1-800-522-6752
www.tycoelectronics.com

Type M Right-Angle Pin Assemblies with Solder Posts, for Power and Coaxial Contacts

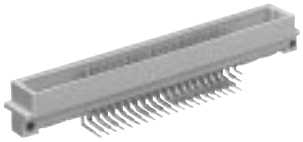

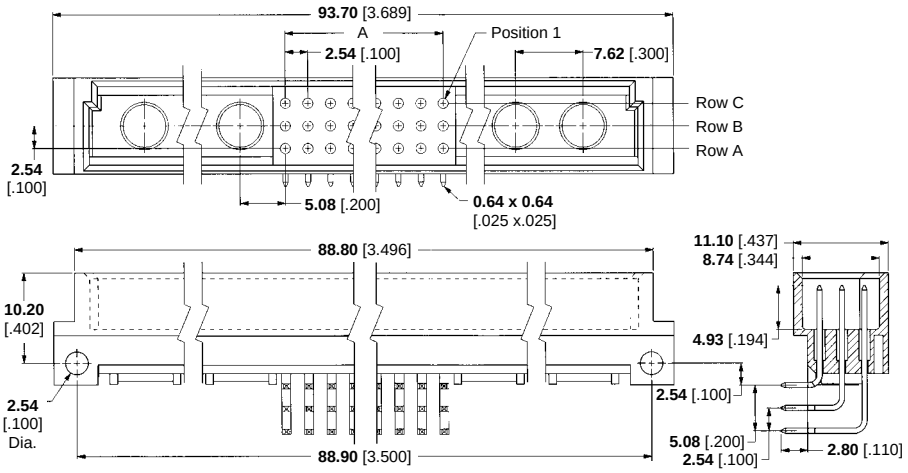

Material:

Housing — Polyester, grey, 94V-0 rated

Contacts — Phosphor bronze

DIN II Plating — Meets performance requirements of DIN Level II.

Related Product Data:

DIN Performance Levels — page 3086

Performance Specifications — page 3087

Mateable Connectors — page 3098

Technical Documents:

DIN Specification
41612

IEC Specification
603-2

Instruction Sheet
408-6927

Contact Arrangement

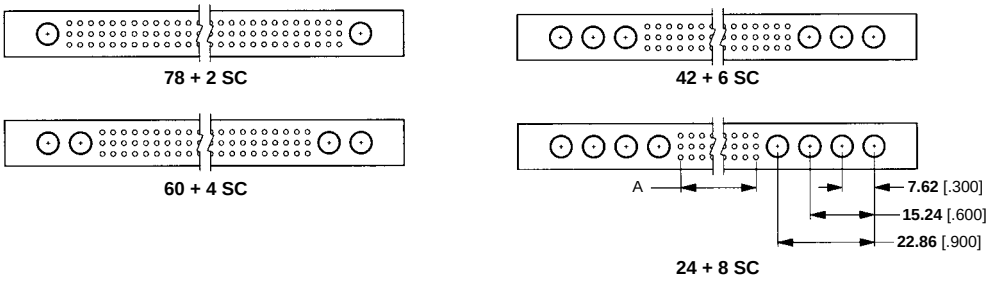

For Type M Receptacle Assemblies for CompactPCI Application

No. of Positions	Rows Loaded*	Dimension A	DIN Level	Part Numbers
78 + 2 SC	A,B,C	**63.50** 2.500 (25 x 2.54 [.100])	II	148411-5
60 + 4 SC	A,B,C	**48.26** 1.900 (19 x 2.54 [.100])	II	148412-5
42 + 6 SC	A,B,C	**33.02** 1.300 (13 x 2.54 [.100])	II	148413-5
24 + 8 SC	A,B,C	**17.78** .700 (7 x 2.54 [.100])	II	148414-5

*Loaded with signal contacts only. See page 3100 for male power and coaxial contacts.

For complete product information, order Catalog 1307515

Products for Industrial & Commercial Applications

Dimensions are shown for reference purposes only.

Dimensions are in inches and millimeters unless otherwise specified. Values in brackets are metric equivalents.

Specifications subject to change.

Technical Support Center
1-800-522-6752
www.tycoelectronics.com

Type M Vertical Receptacle Assemblies with ACTION PIN Posts, for Power and Coaxial Contacts



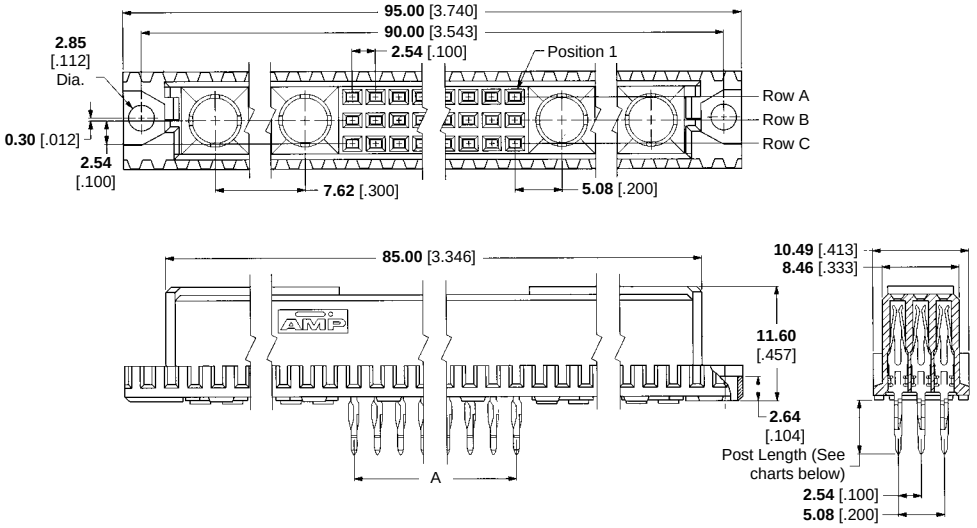

Material:

Housing — Polyester, grey, 94V-0 rated

Contacts — Phosphor bronze

DIN II Plating — Meets performance requirements of DIN Level II.

Related Product Data:

DIN Performance Levels — page 3086

Performance Specifications — page 3087

Mateable Connectors — page 3097

Technical Documents:

DIN Specification
41612

IEC Specification
603-2

Contact Arrangement

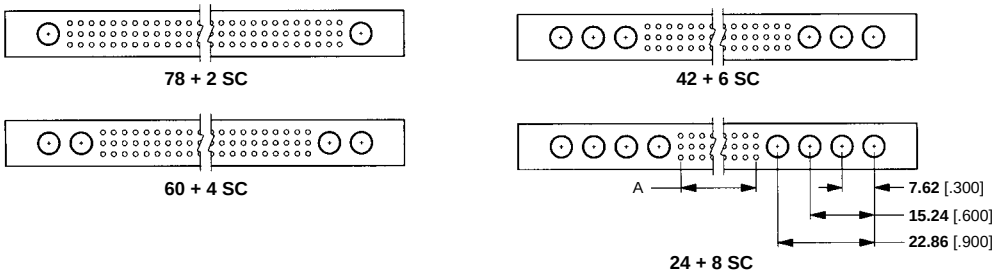

PC Board Thickness 1.57 [.062] & above

No. of Positions	Rows Loaded*	Dimension A	Part Numbers/Post Lengths		
			Bd to Bd**	Wrap-Type**	
			6.00 [.236]	13.00 [.512]	17.00 [.669]
78 + 2 SC	A,B,C	**63.50** 2.500 (25 x 2.54[.100])	148417-5	148418-5	148419-5
60 + 4 SC	A,B,C	**48.26** 1.900 (19 x 2.54[.100])	148420-5	148421-5	148422-5
42 + 6 SC	A,B,C	**33.02** 1.300 (13 x 2.54[.100])	148423-5	148424-5	148425-5
24 + 8 SC	A,B,C	**17.78** .700 (7 x 2.54[.100])	148384-5	148427-5	148381-5

*Loaded with signal contacts only.
**DIN Performance Level II. For “piggy back” applications, consult Tyco Electronics Sales Representative.
***Connectors are toolless (flat rock).

For complete product information, order Catalog 1307515

Products for Industrial & Commercial Applications

Dimensions are shown for reference purposes only.

Dimensions are in inches and millimeters unless otherwise specified. Values in brackets are metric equivalents.

Specifications subject to change.

Technical Support Center
1-800-522-6752
www.tycoelectronics.com

High Current and Coaxial Contacts for Type M Receptacle Assemblies

Material and Finish:

Contacts — Copper alloy, gold over nickel plated
Retaining Ring — Copper alloy

Note: These power contacts are used in the Type M Receptacle Assemblies shown on page 3098.

Female Power Contacts for Cable Termination

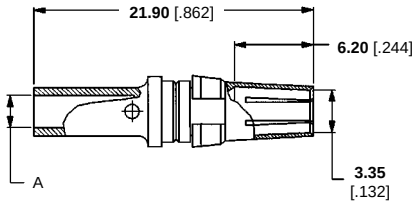

Part Number 148221-1

AWG	Contact Rated Current (Amperes)	Dim. A	Part Numbers	
			Solder	Crimp
8	40	**4.80** .189	1393589-7	148432-1
12-14	20	**2.80** .110	1393589-9	148221-1
16-18	10	**1.70** .067	1-1393589-1	148410-1

Female Power Contacts (MFBL) for Cable Termination

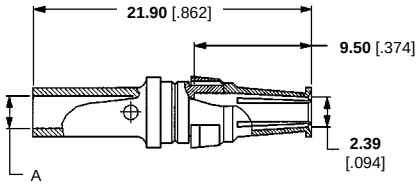

Part Number 148250-1

AWG	Contact Rated Current (Amperes)	Dim. A	Part Numbers	
			Solder	Crimp
8	40	**4.80** .189	1-1393589-6	148433-1
12-14	20	**2.80** .110	1-1393589-5	148250-1
16-18	10	**1.70** .067	1-1393589-4	148416-1

Female Power Contact for PC Board Mount

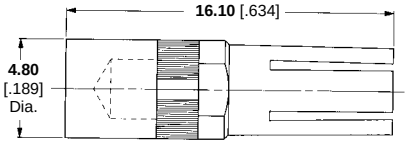

Part Number 148375-1
(40 ampere rated current)

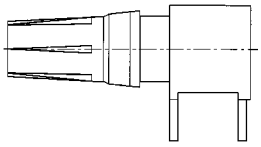

Part Number 148513-1
RIA Power

Coaxial Contacts

Material and Finish:

Outer Contact — Copper alloy, gold plated
Insulator — PTFE

Note: These coaxial contacts are used in the Type M Receptacle Assemblies shown on page 3098.

Coaxial Contact for Female Connector, PC Board Mount (50 ohm)

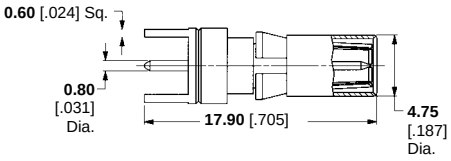

Part Number 1-1393662-0

Note: Contact will raise the connector assembly up 3.18 [.125] from the PC board surface.

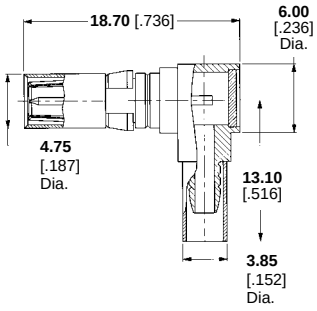

Part Number 1393668-4
90° Right-Angle
for RG316 Cable

Coaxial Contacts for Female Connectors, Cable Termination (50 ohm)

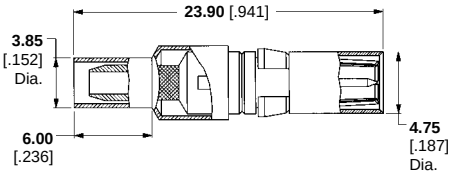

Part Number 1392019-1 for RG316 Cable

For complete product information, order Catalog 1307515

Products for Industrial & Commercial Applications

Dimensions are shown for reference purposes only.

Dimensions are in inches and millimeters unless otherwise specified. Values in brackets are metric equivalents.

Specifications subject to change.

Technical Support Center
1-800-522-6752
www.tycoelectronics.com

High Current and Coaxial Contacts for Type M Pin Assemblies

Material and Finish:

Contact — Brass, gold over nickel plated
Retaining Ring — Copper alloy

Note: These power contacts are used in the Type M Pin Assemblies shown on page 3097.

Male Power Contacts for Cable Termination

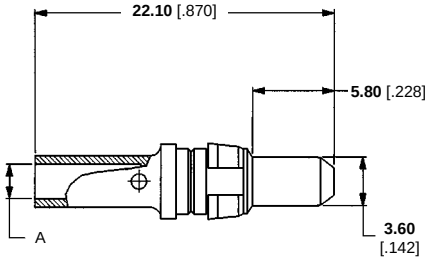

Part Number 148248-1

AWG	Contact Rated Current (Amperes)	Dim. A	Part Numbers	
			Solder	Crimp
8	40	**4.80** .189	1393589-1	148430-1
12-14	20	**2.80** .110	1393589-3	148248-1
16-18	10	**1.70** .067	1393589-5	148407-1

Male Power Contact for PC Board Mount

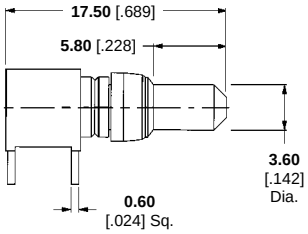

Part Number 148354-1
(25 ampere rated current)

Male Power Contacts (MFBL) for Cable Termination

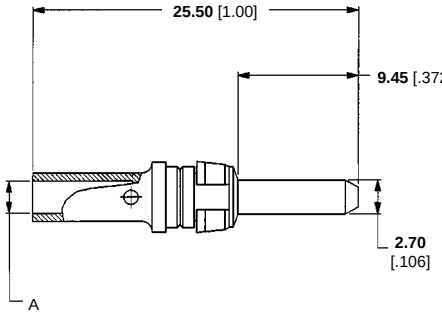

Part Number 148249-1

AWG	Contact Rated Current (Amperes)	Dim. A	Part Numbers
			Crimp
8	40	**4.80** .189	148431-1
12-14	20	**2.80** .110	148249-1
16-18	10	**1.70** .067	148409-1

Coaxial Contacts

Material and Finish:

Inner Contact — Copper alloy, gold plated
Insulator — PTFE

Note: These coaxial contacts are used in the Type M Pin Assemblies shown on page 3097.

Coaxial Contact for Male Connector PC Board Mount (50 ohm)

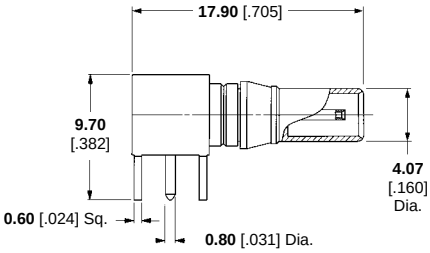

Part Number 1-1393662-4

Coaxial Contacts for Male Connectors, Cable Termination (50 ohm)

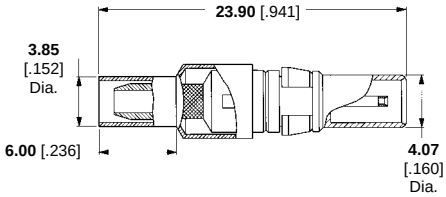

Part Number 1392020-1 for RG316 Cable

For complete product information, order Catalog 1307515

Products for Industrial & Commercial Applications

Dimensions are shown for reference purposes only.

Dimensions are in inches and millimeters unless otherwise specified. Values in brackets are metric equivalents.

Specifications subject to change.

Technical Support Center
1-800-522-6752
www.tycoelectronics.com

Type R Vertical Pin Assemblies with Solder Posts

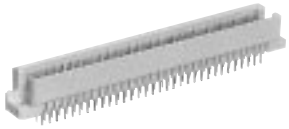

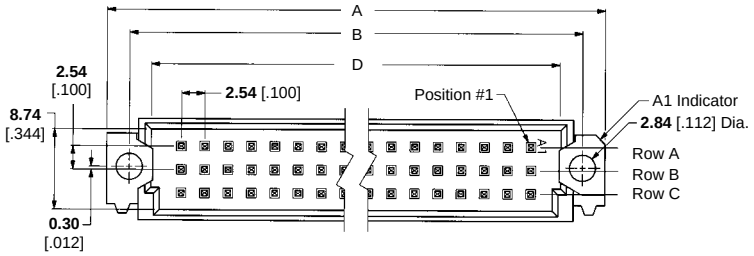

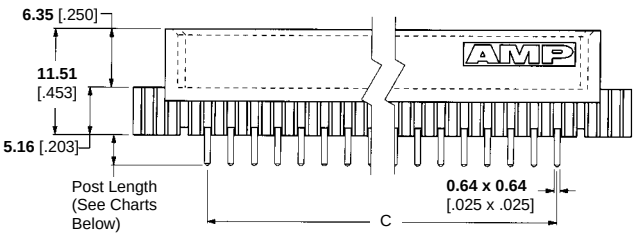

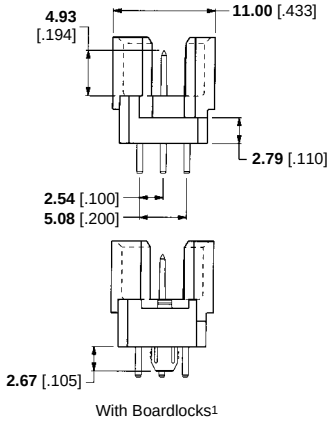

With Boardlocks[1]

Material:

Housing — Polyester, grey, 94V-0 rated

Contacts — Brass

DIN II Plating — Meets performance requirements of DIN Level II.

DIN III Plating — Meets performance requirements of DIN Level III.

Related Product Data:

DIN Performance Levels — page 3086

Performance Specifications — page 3087

Mateable Connectors — pages 3092, 3093, 3094, 3103

Technical Documents:

DIN Specification 41612

IEC Specification 603-2

Application Specification 114-9014

Instruction Sheet 408-6784

Standard Size

No. of Positions	Rows Loaded	Dimensions A	B	C	D	DIN Levels	Part Numbers 3.30 [.130] Post Length	4.57 [.180] Post Length
96	A,B,C	**95.00** 3.740	**90.00** 3.543	**78.74** 3.100	**85.29** 3.358	II	650908-5	650470-5
							536035-5[1]	—
						III	650908-9	650470-9
64	A,C	**95.00** 3.740	**90.00** 3.543	**78.74** 3.100	**85.29** 3.358	II	650933-5	650934-5
							536419-5[1]	536420-5[1]

[1]With Boardlocks

Half Size

No. of Positions	Rows Loaded	Dimensions A	B	C	D	DIN Levels	Part Numbers 3.30 [.130] Post Length	4.57 [.180] Post Length
48	A,B,C	**54.37** 2.140	**49.35** 1.943	**38.10** 1.500	**44.65** 1.758	II	650479-5	650477-5
							536421-5[1]	536422-5[1]
						III	650479-9	—
32	A,C	**54.37** 2.140	**49.35** 1.943	**38.10** 1.500	**44.65** 1.758	II	650935-5	650936-5
							536423-5[1]	536424-5[1]

[1]With Boardlocks

Expanded Size

No. of Positions	Rows Loaded	Dimensions A	B	C	D	DIN Level	Part Numbers 3.30 [.130] Post Length	4.57 [.180] Post Length
120	A,B,C	**115.19** 4.535	**110.31** 4.343	**99.06** 3.900	**105.61** 4.158	II	650919-5	650910-5
							536131-5[1]	536426-5[1]
150	A,B,C	**140.59** 5.535	**135.71** 5.343	**124.46** 4.900	**131.01** 5.158	II	650922-5	650911-5
							536427-5[1]	536428-5[1]

[1]With Boardlocks

For complete product information, order Catalog 1307515

Products for Industrial & Commercial Applications

Dimensions are shown for reference purposes only.

Dimensions are in inches and millimeters unless otherwise specified. Values in brackets are metric equivalents.

Specifications subject to change.

Technical Support Center
1-800-522-6752
www.tycoelectronics.com

Type R Vertical Pin Assemblies with ACTION PIN Posts (0.64[.025] Square)



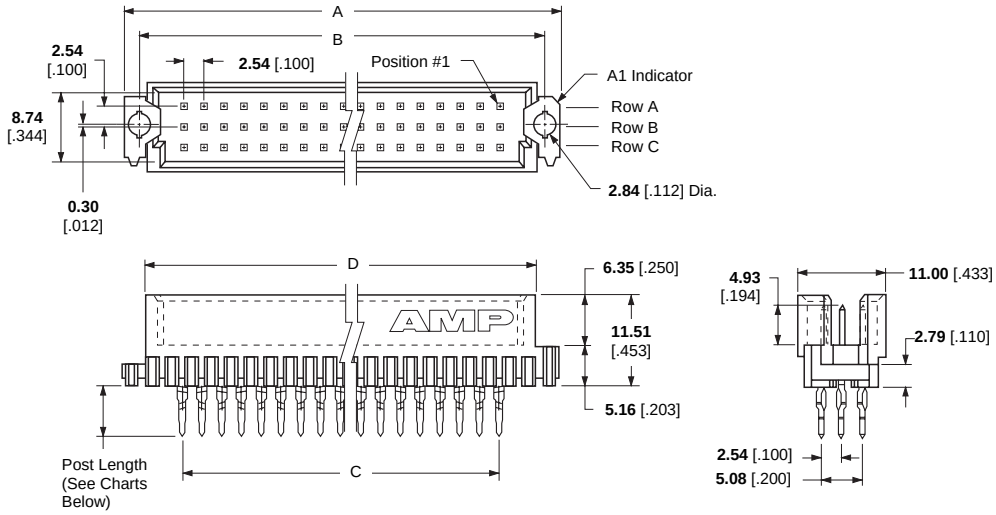

Material:

Housing — Polyester, grey, 94V-0 rated

Contacts — Phosphor bronze

DIN II Plating — Meets performance requirements of DIN Level II.

DIN III Plating — Meets performance requirements of DIN Level III.

Related Product Data:

DIN Performance Levels — page 3086

Performance Specifications — page 3087

Mateable Connectors — pages 3092, 3093, 3094, 3103

Accessories — pages 3015

Technical Documents:

DIN Specification 41612

IEC Specification 603-2

Application Specification 114-9014

Instruction Sheets 408-6927, 408-9740

Standard Size (for PC Board Thicknesses 2.36 [.093] and Above)

No. of Positions	Rows Loaded	Dimensions A	B	C	D	DIN Levels	Part Numbers 6.35 [.250] Post Length	13.23 [.521] Post Length
96	A,B,C	**95.00** 3.740	**90.00** 3.543	**78.74** 3.100	**88.01** 3.465	II	650889-5	650909-5
							—	1-650909-4[1]
						III	650889-9	—
64	A,C	**95.00** 3.740	**90.00** 3.543	**78.74** 3.100	**88.01** 3.465	II	650912-5	650930-5
							—	1-650930-4[1]

[1] Precious metal plating in contact area and for 5.08 [.200] from tip of post; gold flash on remainder of post.

Half Size (for PC Board Thicknesses 2.36 [.093] and Above)

No. of Positions	Rows Loaded	Dimensions A	B	C	D	DIN Levels	Part Numbers 6.35 [.250] Post Length	13.23 [.521] Post Length
48	A,B,C	**54.37** 2.140	**49.35** 1.943	**38.10** 1.500	**47.37** 1.865	II	650918-5	650917-5
32	A,C	**54.37** 2.140	**49.35** 1.943	**38.10** 1.500	**47.37** 1.865	II	650931-5	650932-5

Expanded Size (for PC Board Thicknesses 2.36 [.093] and Above)

No. of Positions	Rows Loaded	Dimensions A	B	C	D	DIN Levels	Part Numbers 6.35 [.250] Post Length	13.23 [.521] Post Length
120	A,B,C	**115.19** 4.535	**110.31** 4.343	**99.06** 3.900	**108.33** 4.265	II	650921-5	650920-5
150	A,B,C	**140.59** 5.535	**135.71** 5.343	**124.46** 4.900	**133.73** 5.265	II	650924-5	650923-5

For complete product information, order Catalog 1307515

Products for Industrial & Commercial Applications

Dimensions are shown for reference purposes only.

Dimensions are in inches and millimeters unless otherwise specified. Values in brackets are metric equivalents.

Specifications subject to change.

Technical Support Center
1-800-522-6752
www.tycoelectronics.com

Type R Receptacle with Eye of Needle Compliant Pin

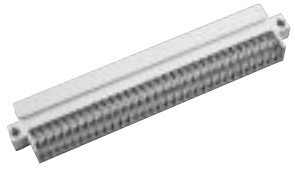

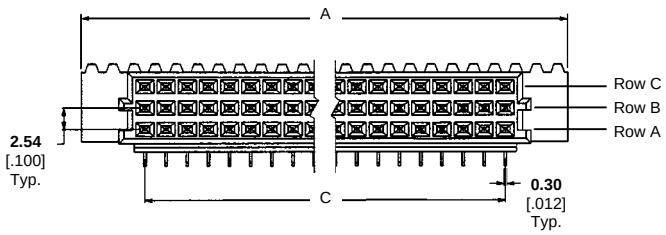

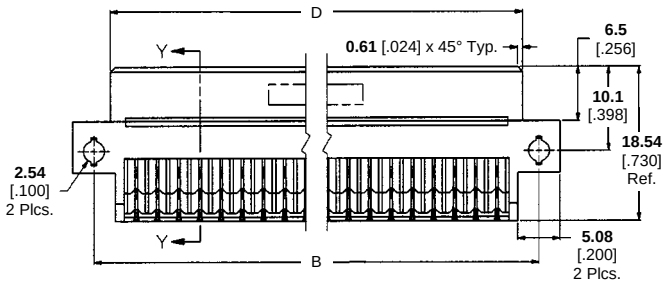

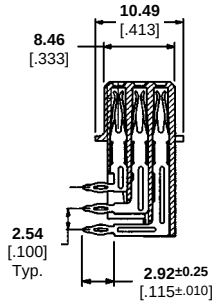

Material:

Housing — Polyester, grey
Contacts — Phosphor bronze
DIN II Plating — Meets performance requirements of DIN Level II.

Related Product Data:

DIN Performance Levels — page 3086
Performance Specifications — page 3087
Mateable Connectors — pages 3101, 3102, 3104

Standard Size

No. of Positions	Rows Loaded	Dimensions A	B	C	D	DIN Level	Part Numbers
96	A,B,C	**93.88** 3.696	**88.90** 3.500	**78.74** 3.100	**85.00** 3.346	II	148292-5
64	A,B	**93.88** 3.696	**88.90** 3.500	**78.74** 3.100	**85.00** 3.346	II	148296-2
	A,C						148296-1
48	A,B,C	**53.24** 2.096	**48.26** 1.900	**38.10** 1.500	**44.35** 1.746	II	148359-4

Expanded Size

No. of Positions	Rows Loaded	Dimensions A	B	C	D	DIN Level	Part Numbers
150	A,B,C	**139.60** 5.496	**134.62** 5.300	**124.46** 4.900	**130.71** 5.146	II	148295-5
120	A,B,C	**114.20** 4.496	**109.22** 4.300	**990.6** 3.900	**105.31** 4.146	II	148360-5

Note: Connectors on this page are toolless (flat rock)

For complete product information, order Catalog 1307515

Products for Industrial & Commercial Applications
Dimensions are shown for reference purposes only.
Dimensions are in inches and millimeters unless otherwise specified. Values in brackets are metric equivalents.
Specifications subject to change.
Technical Support Center
1-800-522-6752
www.tycoelectronics.com

Type R Right-Angle Receptacle Assemblies with Solder Posts (with and without Boardlocks)

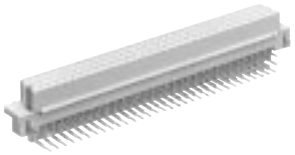

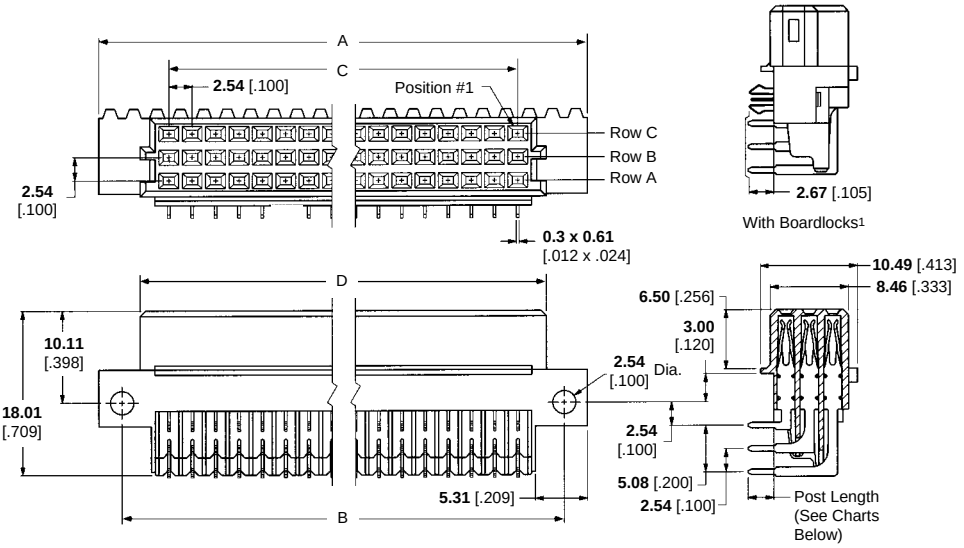

Material:

Housing — Polyester, grey, 94V-0 rated

Contacts and Boardlocks — Phosphor bronze

DIN II Plating — Meets performance requirements of DIN Level II.

DIN III Plating — Meets performance requirements of DIN Level III.

Related Product Data:

DIN Performance Levels — page 3086

Performance Specifications — page 3087

Mateable Connectors — pages 3091, 3101, 3102, 3103

Technical Documents:

DIN Specification
41612

IEC Specification
603-2

Application Specification
114-9014

Instruction Sheet
408-6784

Standard Size

No. of Positions	Rows Loaded	Dimensions A	B	C	D	DIN Levels	Part Numbers 2.79 [.110] Post Length	4.24 [.167] Post Length
96	A,B,C	**93.87** 3.696	**88.90** 3.500	**78.74** 3.100	**85.00** 3.346	II	650461-4[2]	650462-4[2]
							650461-5	650462-5
							650895-4[1,2]	650896-5[1]
							650895-5[1]	—
						III	650461-9	—
64	A,C	**93.87** 3.696	**88.90** 3.500	**78.74** 3.100	**85.00** 3.346	II	650870-4[2]	—
							650870-5	—
							650897-4[1,2]	536431-5[1]
							650897-5[1]	—
						III	—	650871-9
							—	536431-9[1]

Half Size

No. of Positions	Rows Loaded	Dimensions A	B	C	D	DIN Levels	Part Numbers 2.79 [.110] Post Length	4.24 [.167] Post Length
48	A,B,C	**53.24** 2.096	**48.26** 1.900	**38.10** 1.500	**44.35** 1.746	II	650868-4[2]	650869-5
							650868-5	—
							650893-5[1]	536432-5[1]
						III	650868-9	650869-9
32	A,C	**53.24** 2.096	**48.26** 1.900	**38.10** 1.500	**44.35** 1.746	II	650867-5	650958-5
							536433-5[1]	536434-5[1]

Expanded Size

No. of Positions	Rows Loaded	Dimensions A	B	C	D	DIN Levels	Part Numbers 2.79 [.110] Post Length	4.24 [.167] Post Length
150	A,B,C	**139.60** 5.496	**134.62** 5.300	**124.46** 4.900	**130.61** 5.142	II	650875-5	650877-5
							650959-5[1]	—
120	A,B,C	**114.20** 4.496	**109.22** 4.300	**99.06** 3.900	**105.21** 4.142	II	650874-4[2]	—
							650874-5	—
							650899-4[1,2]	—
							650899-5[1]	—

[1] With Boardlocks
[2] Contact plating .000030 Gold in contact area, tin lead on tails, all over .000050 Nickel.

For complete product information, order Catalog 1307515

Products for Industrial & Commercial Applications

Dimensions are shown for reference purposes only.

Dimensions are in inches and millimeters unless otherwise specified. Values in brackets are metric equivalents.

Specifications subject to change.

Technical Support Center
1-800-522-6752
www.tycoelectronics.com

Shrouds for Type C and Type R Standard and Half Size Connectors (96 and 48 Positions)



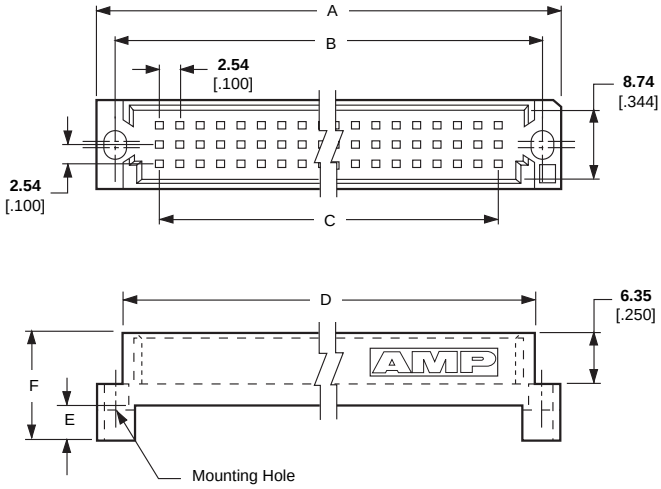

Material:

Polyester, grey, 94V-0 rated

Related Product Data:

Technical Documents:

Application Specification
114-9014

Standard Size

PC Board Thickness	Use With Post Length	Dimensions A	B	C	D	E	F	Part Numbers Without Mounting Holes	With Mounting Holes
3.18 .125	**13.23** .521	**95.00** 3.740	**90.00** 3.543	**78.74** 3.100	**88.14** 3.470	**2.54** .100	**11.43** .450	533236-4	535074-1
	16.99 .669	**95.00** 3.740	**90.00** 3.543	**78.74** 3.100	**88.14** 3.470	**6.35** .250	**15.24** .600	533236-5	535074-2
2.36 .093	**13.23** .521	**95.00** 3.740	**90.00** 3.543	**78.74** 3.100	**88.14** 3.470	**3.43** .135	**12.32** .485	533236-7	—
	16.99 .669	**95.00** 3.740	**90.00** 3.543	**78.74** 3.100	**88.14** 3.470	**7.24** .285	**16.13** .635	533236-8	—
1.57 .062	**13.23** .521	**95.00** 3.740	**90.00** 3.543	**78.74** 3.100	**88.14** 3.470	**4.19** .165	**13.08** .515	1-533236-0	—
	16.99 .669	**95.00** 3.740	**90.00** 3.543	**78.74** 3.100	**88.14** 3.470	**8.00** .315	**16.89** .665	1-533236-1	—

Half Size

PC Board Thickness	Use With Post Length	Dimensions A	B	C	D	E	F	Part Numbers Without Mounting Holes	With Mounting Holes
1.57 .062	**13.23** .521	**54.15** 2.132	**44.65** 1.758	**38.10** 1.500	**47.50** 1.870	**4.19** .165	**13.08** .515	—	650437-1

Note: Shrouds are for use with all 96 and 48 position, 3 row, Type C and R Connectors mounted in 3.18 [.125], 2.36 [.093] and 1.57 [.062] thick PC boards. Twelve interference areas are located in selected cavities.

Type F Right-Angle Pin Assemblies with Solder Posts

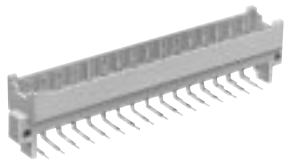

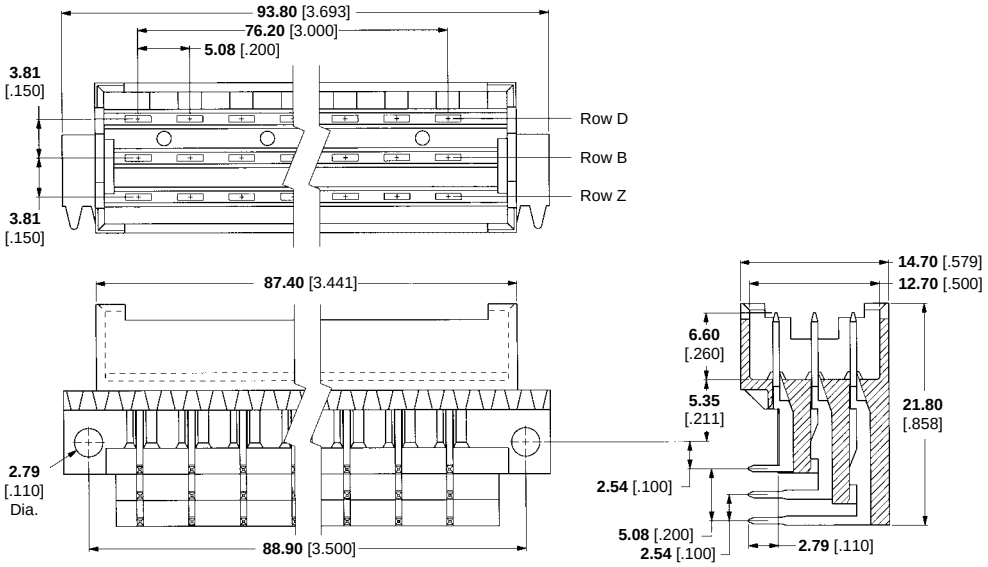

Material:

Housing — Polyester, grey, 94V-0 rated

Contacts — Phosphor bronze

DIN II Plating — Meets performance requirements of DIN Level II.

DIN III Plating — Meets performance requirements of DIN Level III.

Related Product Data:

DIN Performance Levels — page 3086

Performance Specifications — page 3087

Mateable Connectors — pages 3107, 3108

Technical Documents:

DIN Specification
41612

IEC Specification
603-2

Instruction Sheet
408-6784

Standard Size

No. of Positions	Rows Loaded	DIN Levels	Part Numbers	
			—	MFBL*Z32
48	Z,B,D	II	2-164045-4	2-166095-4
		III	2-164045-8	—
32	Z,B	III	—	2-166096-8
32	Z,D	II	2-164306-4	—

*MFBL (Make First/Break Last)

For complete product information, order Catalog 1307515

Products for Industrial & Commercial Applications

Dimensions are shown for reference purposes only.

Dimensions are in inches and millimeters unless otherwise specified. Values in brackets are metric equivalents.

Specifications subject to change.

Technical Support Center
1-800-522-6752
www.tycoelectronics.com

Type F Vertical Receptacle Assemblies with Wrap Type and Solder Posts

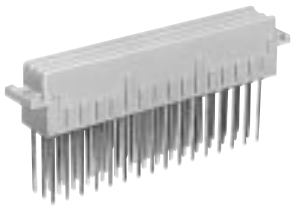

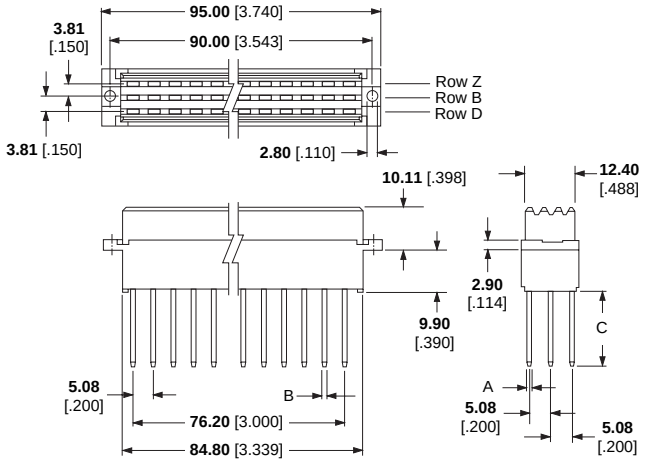

Material:

Housing — Polycarbonate, grey, 94V-1 rated or polyester (see chart)

Contacts — Phosphor bronze

DIN II Plating — Meets performance requirements of DIN Level II.

DIN III Plating — Meets performance requirements of DIN Level III.

Related Product Data:

DIN Performance Levels — page 3086

Performance Specifications — page 3087

Mateable Connectors — page 3106

Technical Documents:

DIN Specification
41612

IEC Specification
603-2

Instruction Sheet
408-6784

No. of Positions	Post Type	Rows Loaded	DIN Levels	Part Numbers
48	Wrap Type 1.0 [.039] Square	Z,B,D	II	166717-4[1]
	4 [.157] Solder	Z,B,D	II	166733-4
32	4 [.157] Solder	Z,B	II	166732-4
	Wrap Type 1.0 [.039] Square	Z,D	II	166719-4[1]
	4 [.157] Solder	Z,D	II	166951-4

[1] Housing material is polyester, grey, 94V-0 rated.

Post Type	Post Dimensions		
	A	B	C
Wrap Type 1.0 [.039] Square	**1.00** .039	**1.00** .039	**22.00** .866
4 [.157] Solder	**0.60** .022	**0.30** .012	**4.00** .157

For complete product information, order Catalog 1307515

Products for Industrial & Commercial Applications

Dimensions are shown for reference purposes only.

Dimensions are in inches and millimeters unless otherwise specified. Values in brackets are metric equivalents.

Specifications subject to change.

Technical Support Center
1-800-522-6752
www.tycoelectronics.com

Type F Vertical Receptacle Assemblies with ACTION PIN Posts (1.00[.039] Square)



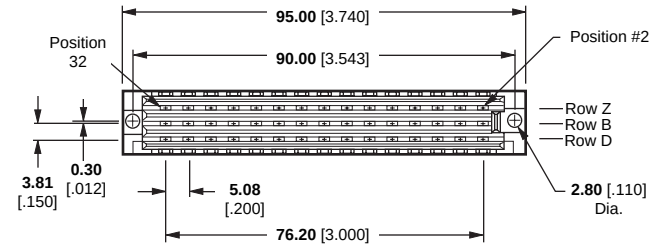

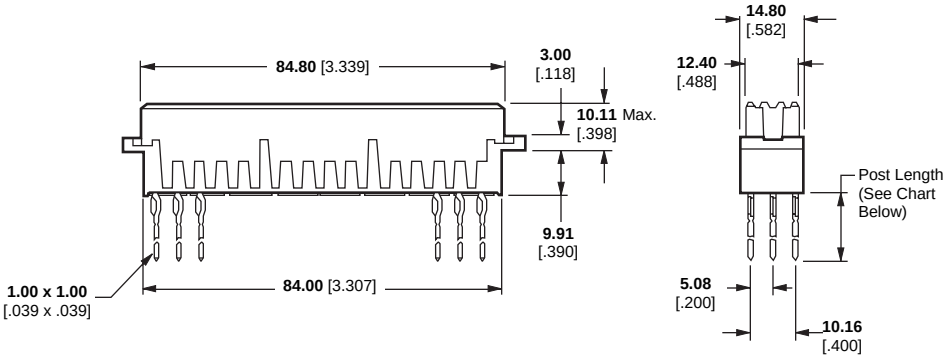

Material:

Housing — Polyester, grey, 94V-0 rated (except where noted)

Contacts — Phosphor bronze

DIN II Plating — Meets performance requirements of DIN Level II.

DIN III Plating — Meets performance requirements of DIN Level III.

Related Product Data:

DIN Performance Levels — page 3086

Performance Specifications — page 3087

Mateable Connectors — page 3106

Application Tooling — page 3110

Technical Documents:

DIN Specification
41612

IEC Specification
603-2

Instruction Sheet
408-6927

Standard Size (for PC Board Thicknesses 2.36 [.093] and Above)

No. of Positions	Rows Loaded	DIN Levels	Part Numbers	
			6 [.236][1] Post Length	Wrap Type 22 [.866] Post Length
48	Z,B,D	II	166648-4	166555-4
		III	2-166648-4[2]	—
32	Z,B	II	166649-4	—
		III	166649-8	166594-8
	Z,D	III	166728-8	166727-8

[1] Pre-notched to break off at 6.00 [.236] from bottom of connector. Connectors on this page are toolless (flat rock).
[2] Extended ends of posts already broken off (only for 2-166648-4).

For complete product information, order Catalog 1307515

Products for Industrial & Commercial Applications

Dimensions are shown for reference purposes only.

Dimensions are in inches and millimeters unless otherwise specified. Values in brackets are metric equivalents.

Specifications subject to change.

Technical Support Center
1-800-522-6752
www.tycoelectronics.com

Eurocard Connectors –– Insertion Tooling

Eurocard connectors with ACTION PIN contacts allow high speed, solderless backplane construction through reliable press-fit application.

Board support fixtures are used to support PC boards or backplanes while connectors are being assembled to the boards or backplanes. Board support fixtures are to be supplied by the customer in accordance with AMP Application Specification No. 114-9014. Also, AMP Instruction Sheet No. 408-6927 provides AMP recommendations for manufacturing board support fixtures.

Application Press Options:

SM-3 Pneumatic Machine – Part Number 8147000-2

SM-10/20 Electric-Hydraulic Machine – Part Number 803880-6

Manual Arbor Frame – Part Number 58024-1

Eurocard Connector Seating Tools

Connector		Receptacle Assembly		Pin Assembly Tools
Type	Post Size	Standard Tools	Economy Tools	
B	**0.64 x 0.64** .025 x .025	432805-1	—	—
	0.30 x 0.61 .012 x .024	1	1	
C	**0.64 x 0.64** .025 x .025	432583-1	535072-1	—
	0.30 x 0.61 .012 x .024	1	1	
C (Half Size)	**0.64 x 0.64** .025 x .025	432582-1	—	—
	0.30 x 0.61 .012 x .024	1	1	
F	**0.64 x 0.64** .025 x .025	1	1	—
	1.00 x 1.00 .039 x .039			
M 24 Compact, PCI Rcpt.	**0.64 x 0.64** .025 x .025	—	148454-1	—
M Crimp Power Contacts*	use Daniels crimping tool M 300-BT			
R	**0.64 x 0.64** .025 x .025	—	—	768211-2
				768216-2[2]
R (Half Size)	**0.64 x 0.64** .025 x .025	—	—	768211-1
				768216-1[2]
R (120 Position)	**0.64 x 0.64** .025 x .025	—	—	768211-3
				768216-3[2]
R (150 Position)	**0.64 x 0.64** .025 x .025	—	—	768211-4
				768216-4[2]

[1] Flat rock assembly; tooling not required
[2] Programmable tooling for MFBL pin assemblies
* See customer drawing for positioner and crimp setting.

Eurocard Connector Removal Tools

Connector Type	Tail Length	Removal Tool Part Numbers
C (96 Position, 3 Row)	≤ **6.35** .250	534611-1
	12.70 .500	534611-2
	17.00 .669	534611-3
M (Power Contact)	—	106242-1

Receptacle Assembly Seating Tools

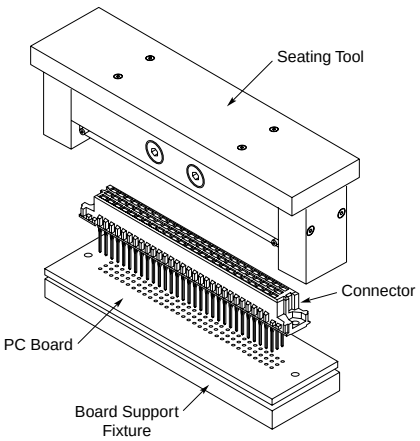

Pin Assembly Seating Tools

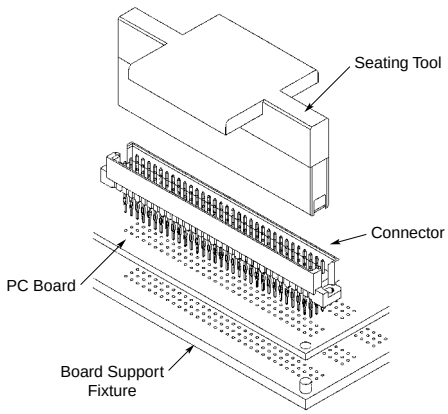

For complete product information, order Catalog 1307515

Products for Industrial & Commercial Applications
Dimensions are shown for reference purposes only.
Dimensions are in inches and millimeters unless otherwise specified. Values in brackets are metric equivalents.
Specifications subject to change.
Technical Support Center 1-800-522-6752 www.tycoelectronics.com

Technical Documents

Instruction Sheets provide instructions for assembling or applying the product. They are intended for the Manufacturing Assembler or Operator.

408-6732 AMP Pneumatic Tool 91112-3

408-6784 AMP Eurocard Connectors (Soldering and Cleaning)

408-6927 Design Recommendations for Printed Circuit Board Support Fixture

408-6975 AMP Contact Removal Tip 265964-1

408-7777 AMP Manual Arbor Tool 91085-2

408-7909 AMP Hand Tool 90301-2

408-9027 Adapter Kit for Greenerd 3A and 3B Frame Assemblies

408-9052 AMP Seating Tools 58171-1, -2, -3 and -4 for Eurocard Connectors

408-9142 Contact Replacement Tool Kit 265871-7

408-9185 Contact Removal Tool 58209-1 for ACTION PIN Contacts

408-9222 AMP Hand Tool 90418-1

408-9623 AMP Seating Tool 535072-1

408-9740 AMP Seating Tools 768211-1, -2, -3 and -4

408-9828 Hand Tool Kit 768340-1 for Connector-Specific Kits

408-9840 Connector-Specific Kit 768352-1 for Eurolatch Connectors

408-9894 Programmable Tool

408-042-140 AMP (Holland) Hand Tool 169480-1

Note: Other technical documents may be available, call the AMP Technical Support Center 1-800-522-6752.

Application Specifications describe requirements for using the product in its intended application and/or crimping information. They are intended for the Packaging and Design Engineer and the Setup person.

114-9014 AMP Eurocard Connector Types B, C, Q, and R (Board-to-Board Application)

114-19004 AMP Eurocard Connector, Type F Receptacle

114-12026 Type M Coax Contacts

114-10014 Size VIII Power Contacts

Table of Contents

Ribbon Cable Connectors

AMPMODU 50/50 Grid Connectors (.050 x .050 [1.27 x 1.27] Centerline).....4002
Double-Row Receptacle Cable Connectors 4003
Application Tooling 4004

AMP-LATCH System 50 Connectors (.050 x .100 [1.27 x 2.54] Centerline) 4005
Double-Row Receptacle Cable Connectors 4006

AMP-LATCH Ribbon Cable Connectors (.100 x .100 [2.54 x 2.54] Centerline)...4007
Double-Row Receptacle Cable Connectors.....4008-4010
Receptacle Accessories 4011, 4012
Low-Profile Pin Headers 4013-4024
Universal Ejection Style Pin Headers 4025-4029
High Temperature Thru-Hole (SMT Compatible)
Universal Ejection Style Pin Headers 4030, 4031
Pin Header Accessories 4032

Flexible Film Products

.050 x .100 [1.27 x 2.54] Centerline Flexible Flat Conductor (FFC) Cable Connectors 4033
Contacts 4034
Single-Row Receptacle Housings.....4035, 4036
Double-Row Receptacle Housings 4037, 4038

.100 x .100 [2.54 x 2.54] Centerline Flexible Flat Conductor (FFC) Cable Connectors
Contacts for Flexible Flat Conductor Cable 4039
Contacts for Round Wire 4040
Single-Row Slim-Line Receptacle Housings 4041, 4042
Single-Row Pin Housings 4043
Single-Row Receptacle Housings 4044
Double-Row Pin Housings 4045, 4046
Double-Row Receptacle Housings 4047-4049
Trio-Mate Connectors 4050, 4051
Accessories 4052-4054

.039 [1.0] FPC (Flexible Printed Circuit) Connectors 4055-4058

Application Tooling.....4059

Products for Industrial & Commercial Applications
Dimensions are shown for reference purposes only.
Dimensions are in inches and millimeters unless otherwise specified. Values in brackets are metric equivalents.
Specifications subject to change.
Technical Support Center 1-800-522-6752 www.tycoelectronics.com

Product Facts

- **Double-row receptacle connectors provide cable-to-board connection capabilities for vertical headers (non-latching) and right-angle headers (latching and non-latching)**
- **IDC (Insulation Displacement Crimp) mass termination of solid or stranded round conductor .050 [1.27] centerline ribbon cable with PVC or polyethylene insulation**
- **Accommodates ribbon cable conductor sizes of 28 AWG [0.08-0.09 mm^2] and 30 AWG [0.05 mm^2] and insulation diameters up to .036 [0.91] maximum**
- **Reliable single beam receptacle contact design**
- **Duplex plated receptacle contacts; gold plated in mating area, bright tin-lead in termination area**
- **Terminating covers (sold separately) provide both strain relief and protection to the termination area**
- **Sizes of 10, 20, 30, 40, 50, 60, 70, 80 and 100 positions**
- **Connectors available with or without metal latch**
- **Connectors without latches are polarized to prevent mismating**
- **Recognized under the Component Program of Underwriters Laboratories Inc., File No. E28476**
- **Certified by Canadian Standards Association File No. LR7189**

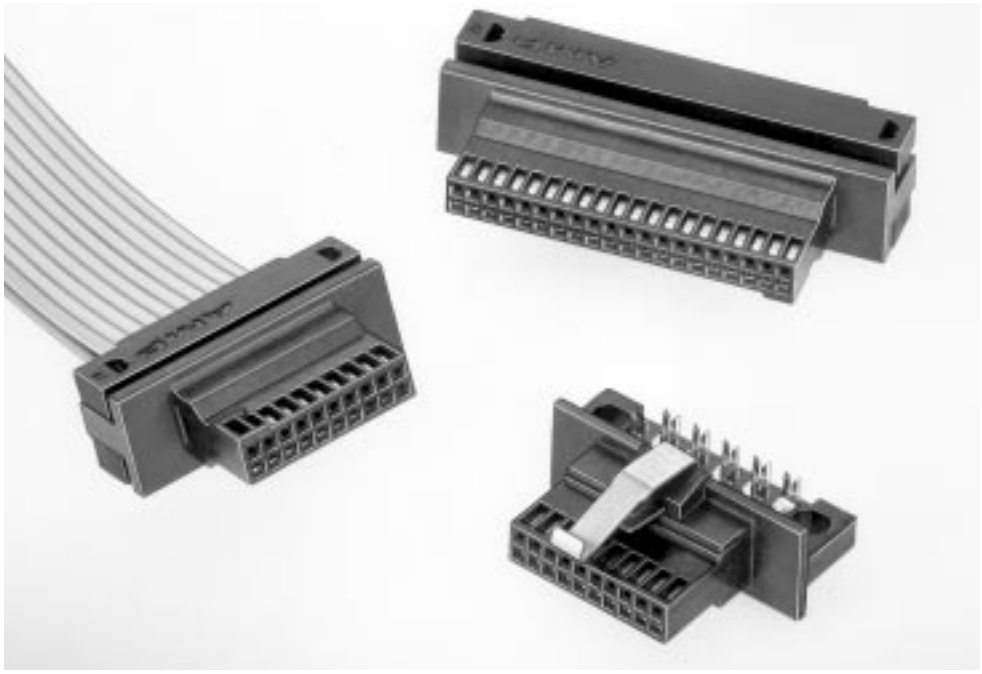

These double-row cable connectors, with a .050 x .050 [1.27 x 1.27] centerline contact spacing, provide cable-to-board connection capabilities for the AMPMODU 50/50 Grid Connector System. Cable connectors without a latch will mate with the vertical headers (Section 2, page 2024), while cable connectors with or without a latch can be used to mate with the right-angle headers (Section 2, page 2026).

The cable connectors feature reliable single-beam IDC (insulation displacement crimp) contacts which are duplex plated with .000030 [0.00076] gold. These contacts can be mass terminated to either solid or stranded round conductor ribbon cable with conductor sizes of 28 AWG [0.08-0.09 mm^2] and 30 AWG [0.05 mm^2] and a maximum insulation diameter of .036 [0.91]. During termination, the terminating covers, which must be purchased separately, assist in guiding the wire into the IDC contacts, then provide strain relief when fully seated. Actual termination is accomplished with the AMP manual tooling shown on page 4004.

The latching version of the cable connector is equipped with a metal latch which provides positive retention of the receptacle cable connector when mated with a surface-mounted right-angle header. The cable connector without a metal latch features polarization to prevent mismating. All connectors are available in sizes ranging from 10 through 100 positions (in 10 position increments).

Performance Specifications:

Mating Force — 6.4 oz (1.78 N) max. per contact

Unmating Force Without Latch — .5 oz [0.14 N] min. per contact

Durability — Tested to 200 cycles min.

Current Rating — (10°C T rise): .5 ampere per contact

Operating Temperature Range — -65°C to +105°C

Termination Resistance — 25 milliohms max. (initial and final)

Insulation Resistance — 5000 megohms min. (initial)

Dielectric Withstanding Voltage — 300 VAC

For complete product information, order Catalog 1307819

Ribbon Cable-to-Board Receptacle Connectors, Double Row, .050 x .050 [1.27 x 1.27] Centerline

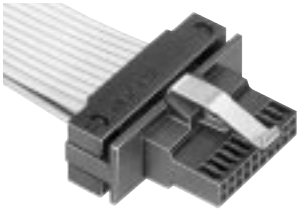

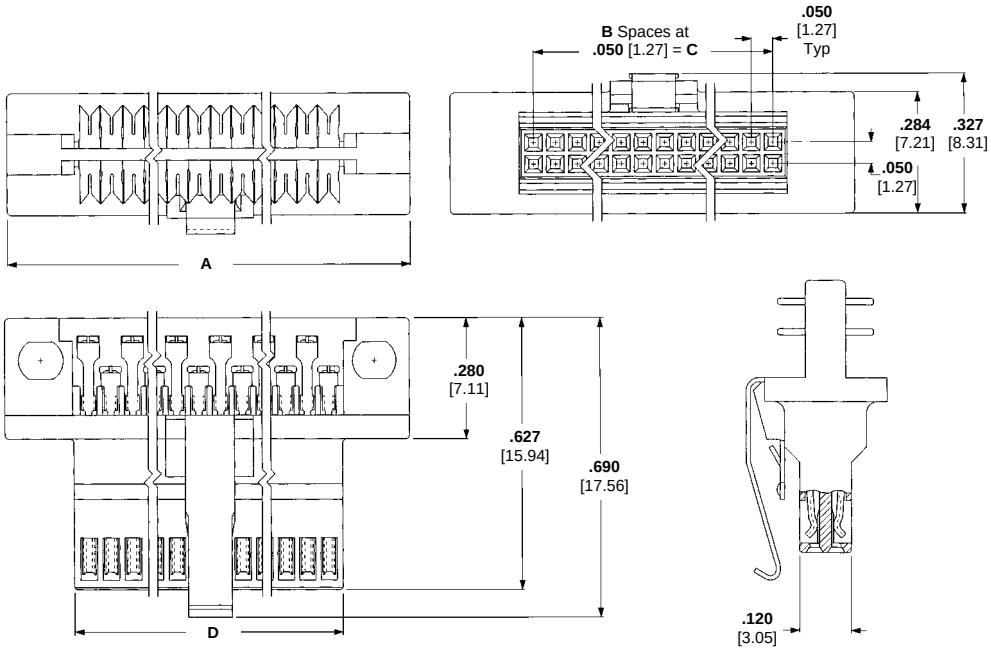

Material and Finish:

Housing — Thermoplastic, black, 94V-0 rated

Latch — Stainless steel

Contacts — Phosphor bronze; duplex plated .000030 [0.00076] minimum gold in mating area, .000050 [0.00127] minimum bright tin-lead in termination area, with entire contact underplated .000050 [0.00127] minimum nickel

Related Product Data:

Mating Headers — Section 2, page 2024, 2026 (latching)

Terminating Covers (Must be Purchased Separately, 2 Required per Connector) — below

Termination Tooling — page 4004

Performance Specifications — page 4002

Technical Documents:

Product Specification
108-1443

Application Specification
408-9817, 408-9909

Packaging: Tube

No. of Positions	Dimensions A	B	C	D	Receptacle Part Numbers With Latch	Without Latch
10	**.578** 14.68	4	**.200** 5.08	**.266** 6.76	104892-1	104893-1
20	**.828** 21.03	9	**.450** 11.43	**.516** 13.11	104892-2	104893-2
30	**1.078** 27.38	14	**.700** 17.78	**.766** 19.46	104892-3	104893-3
40	**1.328** 33.73	19	**.950** 24.13	**1.016** 25.81	104892-4	104893-4
50	**1.578** 40.08	24	**1.200** 30.48	**1.266** 32.16	104892-5	104893-5
60	**1.828** 46.43	29	**1.450** 36.83	**1.516** 38.51	104892-6	104893-6
70	**2.078** 52.78	34	**1.700** 43.18	**1.766** 44.86	104892-7	104893-7
80	**2.328** 59.13	39	**1.950** 49.53	**2.016** 51.21	104892-8	104893-8
100	**2.828** 71.83	49	**2.450** 62.23	**2.516** 63.91	1-104892-0	—

Terminating Covers for Cable Connectors



Material:

Glass-filled thermoplastic, black, 94V-0 rated

Related Product Data:

Connectors used with Covers — above

Termination Tooling — page 4004

Technical Documents:

Product Specification
108-1443

Application Specification
408-9817, 408-9909

Packaging: Plastic bag

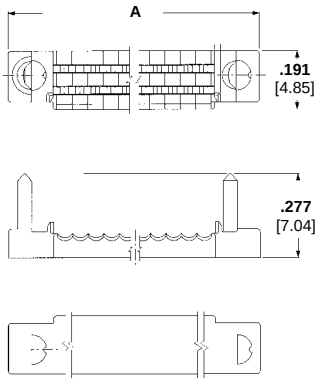

No. of Positions	Dimension A	Terminator Cover Part Numbers
10	**.565** 14.35	104891-1
20	**.815** 20.70	104891-2
30	**1.065** 27.05	104891-3
40	**1.315** 33.82	104891-4
50	**1.565** 39.75	104891-5
60	**1.815** 46.10	104891-6
70	**2.065** 52.45	104891-7
80	**2.315** 58.80	104891-8
100	**2.815** 71.50	1-104891-0

Note: Terminating covers must be purchased separately, two are required for each cable connector.

For complete product information, order Catalog 1307819

Products for Industrial & Commercial Applications
Dimensions are shown for reference purposes only.
Dimensions are in inches and millimeters unless otherwise specified. Values in brackets are metric equivalents.
Specifications subject to change.
Technical Support Center
1-800-522-6752
www.tycoelectronics.com

Application Tooling for Cable Connectors

The AMP Manual Miniature Application Frame Assembly 91295-1, equipped with a Cover Closing Kit 543518-1, is used for the IDC termination of ribbon cable to the cable connectors shown on page 4003.

Prior to termination, the covers must be partially assembled onto a connector housing, the cable inserted between the covers and contacts and the covers preclosed by hand, clamping the cable in place.

In the Manual Miniature Application Frame Assembly, the covers are fully seated to complete the mass termination and provide strain relief for the completed connection.

For tooling information, call Technical Support Center **1-800-522-6752.**



Photo 94522

Manual Miniature Application Frame Assembly 91295-1 with Cover Closing Kit 543518-1

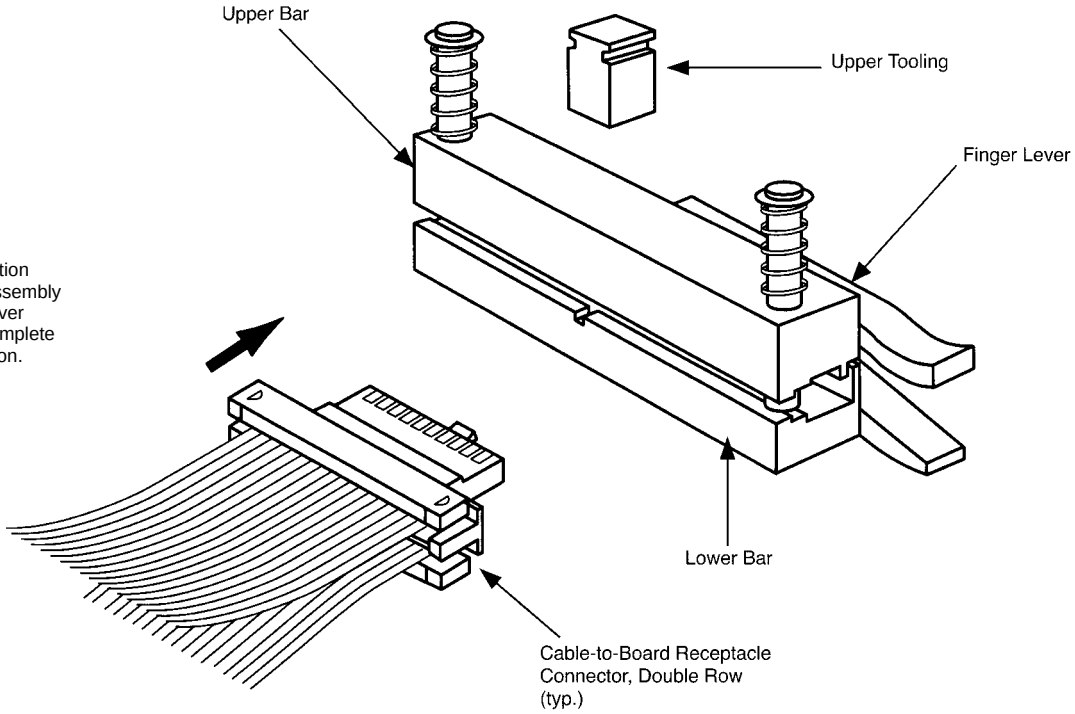

Note: Refer to AMP Instruction Sheets 408-9817 (Frame Assembly 91295-1) and 408-9909 (Cover Closing Kit 543518-1) for complete termination/tooling information.

For complete product information, order Catalog 1307819

Products for Industrial & Commercial Applications
Dimensions are shown for reference purposes only.
Dimensions are in inches and millimeters unless otherwise specified. Values in brackets are metric equivalents.
Specifications subject to change.
Technical Support Center
1-800-522-6752
www.tycoelectronics.com

Product Facts

- **Preassembled housing and cover**
- **One step termination**
- **End and daisy chain termination**
- **Positive end latching of connector to universal header**
- **Terminates 30 AWG [0.05 mm²] solid and 32 AWG [0.03 mm²]* stranded .025 [0.64] centerline ribbon cable**
- **0.5 ampere current rating (limited by cable)**

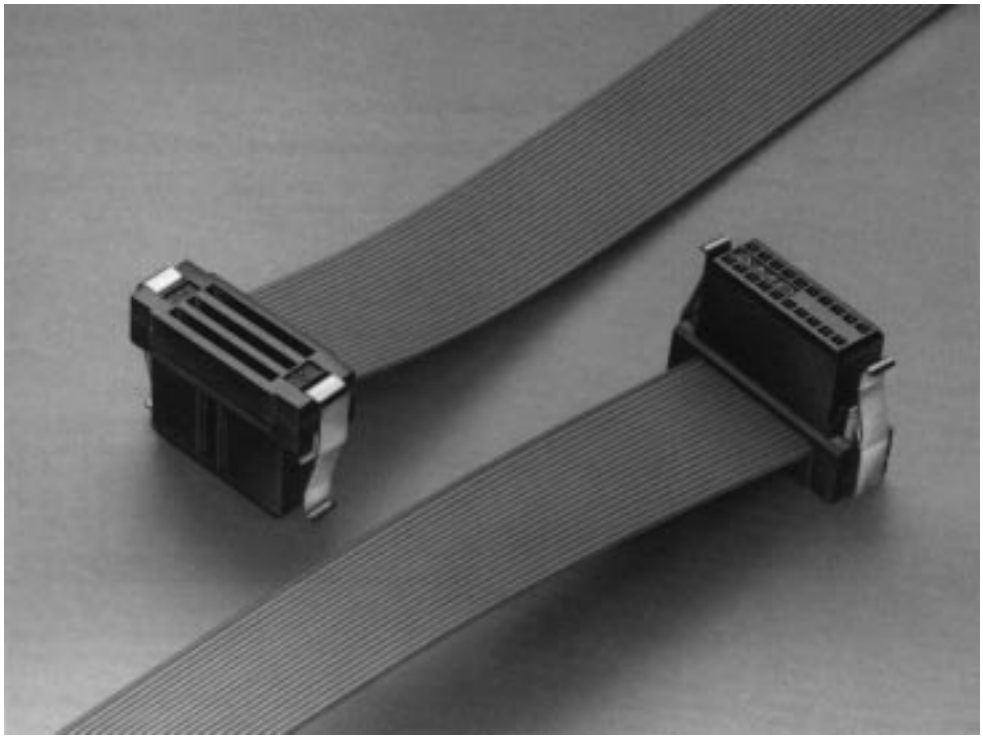

The AMP-LATCH System 50 Ribbon Cable connector is a receptacle connector that will terminate ribbon cable on .025 [0.64] centerlines. It is available in select sizes from 10 to 100 positions and will accommodate 30 AWG [0.05 mm²] solid and 32 AWG [0.03 mm²] stranded conductors, and both TEFLON and PVC cable insulations.

The housing and cover are of a high temperature tolerant thermoplastic (black) with a 94V-0 rating. A beryllium copper single mating beam contact provides the interconnect between the conductor and the .015 [0.38] square posts on the .050 x .100 [1.27 x 2.54] grid. The contacts are plated with 30 gold duplex plating. The latching feature is located on the receptacle, not the header, and saves board space and eliminates future problems of "latch height compatibility."

Performance Specifications:

Mating Force — 4 oz. (1.11 N) max. per contact

Unmating Force Without Latch — .5 oz. (0.13 N) min. per contact

Durability — Tested to 150 cycles min.

Current Rating — .5 ampere per contact

Operating Temperature Range — -65°C to +105°C

Insulation Resistance — 5000 megohms min.

Dielectric Withstanding Voltage — 200 VAC

For complete product information, order Catalog 1307819

Products for Industrial & Commercial Applications

Dimensions are shown for reference purposes only.

Dimensions are in inches and millimeters unless otherwise specified. Values in brackets are metric equivalents.

Specifications subject to change.

Technical Support Center
1-800-522-6752
www.tycoelectronics.com

Double Row Receptacles, .050 x .100 [1.27 x 2.54] Centerline, Cable-to-Board, Ribbon Cable



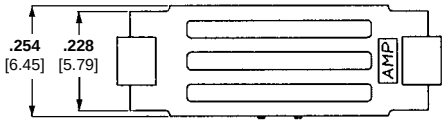

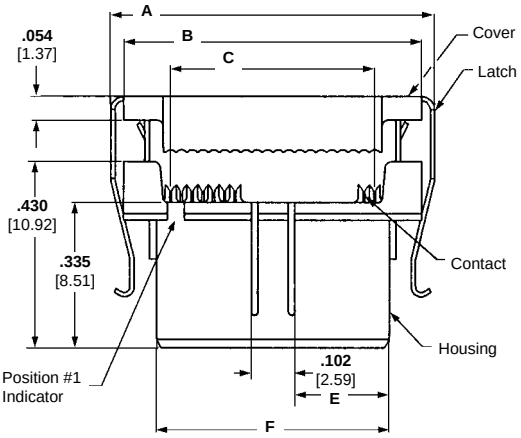

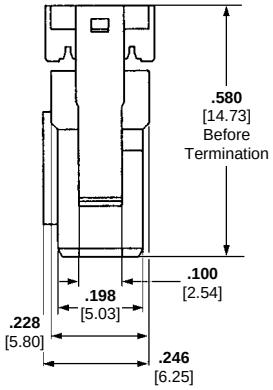

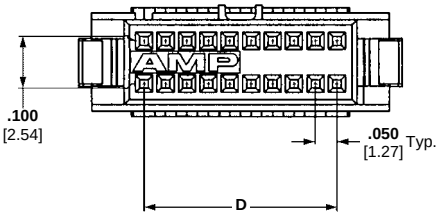

Material and Finish:

Housing—Black thermoplastic, 94V-0 rated

Latches—Stainless steel

Contacts—Beryllium copper, plated gold over nickel with tin-lead in termination area

Related Product Data:

Performance Characteristics—page 4005

Mateable Headers—Section 2, pages 2031, 2032, 2034 (Double Row), 2035, 2040

Application Tooling:
R-CAM 2A Ribbon Cable Assembly Machine —page 13019

R-CAM 3A Ribbon Cable Assembly Machine —page 13019

R-CAM 4 Ribbon Cable Assembly Machine —page 13019

Manual Arbor Frame Assembly, **Part Number** 91085-2 —page 13015

Pneumatic Auto-Cycle Unit, **Part Number** 91112-3 — page 13016

Mates with Posts—.015 [0.38] square, .125 [3.18] long, on .050 x .100 [1.27 x 2.54] grid

Technical Documents:

Product Specification
108-1109

Application Specification
114-25029

No. of Positions	Dimensions A	B	C	D	E	F	Part Numbers
10	**.510** 12.95	**.445** 11.30	**.225** 5.72	**.200** 5.08	**.096** 2.44	**.294** 7.47	111196-1
14	**.610** 15.49	**.545** 13.84	**.325** 8.26	**.300** 7.62	**.146** 3.71	**.394** 10.01	111196-2
16	**.660** 16.76	**.595** 15.11	**.375** 9.52	**.350** 8.89	**.171** 4.34	**.444** 11.28	111196-3
20	**.760** 19.30	**.695** 17.65	**.475** 12.07	**.450** 11.43	**.221** 5.61	**.544** 13.82	111196-4
24	**.860** 20.32	**.795** 20.19	**.575** 14.61	**.550** 13.97	**.271** 6.88	**.644** 16.36	111196-5
26	**.910** 23.11	**.845** 21.46	**.625** 15.88	**.600** 15.24	**.296** 7.52	**.694** 17.63	111196-6
30	**1.010** 25.65	**.945** 24.00	**.725** 18.42	**.700** 17.78	**.346** 8.79	**.794** 20.17	111196-7
34	**1.110** 28.19	**1.045** 26.54	**.825** 20.96	**.800** 20.32	**.396** 10.06	**.894** 22.71	111196-8
40	**1.260** 32.00	**1.195** 30.35	**.975** 34.54	**.950** 24.13	**.471** 11.96	**1.044** 26.52	111196-9
44	**1.360** 34.54	**1.295** 32.89	**1.075** 27.31	**1.050** 26.67	**.521** 13.23	**1.144** 29.06	1-111196-0
50	**1.510** 38.35	**1.445** 36.70	**1.225** 31.12	**1.200** 30.48	**.596** 15.14	**1.294** 32.87	1-111196-1
60	**1.760** 44.70	**1.695** 43.05	**1.475** 37.47	**1.450** 36.83	**.721** 18.31	**1.544** 39.22	1-111196-2
64	**1.860** 47.24	**1.795** 45.59	**1.575** 40.00	**1.550** 39.37	**.771** 19.58	**1.644** 41.76	1-111196-3
68	**1.960** 49.78	**1.895** 48.13	**1.675** 42.55	**1.650** 41.91	**.821** 20.85	**1.744** 44.30	1-111196-7
72	**2.060** 52.32	**1.995** 50.67	**1.775** 45.08	**1.750** 44.45	**.871** 22.12	**1.844** 46.84	1-111196-4
80	**2.260** 57.40	**2.195** 55.75	**1.975** 50.17	**1.950** 49.53	**.971** 24.66	**2.044** 51.92	1-111196-5
100	**2.760** 70.10	**2.695** 68.45	**2.475** 62.87	**2.450** 62.23	**1.221** 31.01	**2.544** 64.62	1-111196-6

For complete product information, order Catalog 1307819

Products for Industrial & Commercial Applications

Dimensions are shown for reference purposes only.

Dimensions are in inches and millimeters unless otherwise specified. Values in brackets are metric equivalents.

Specifications subject to change.

Technical Support Center
1-800-522-6752
www.tycoelectronics.com

Product Facts

- **.100 x .100 [2.54 X 2.54] mating grid for .050 [1.27] pitch ribbon cable**
- **Tuning fork contact offers a military approved design, at an economical cost**
- **Polarization options include military, plus center and military**
- **Choice of duplex gold plating on contact mating area**
- **Insulation displacement contacts for fast, economical mass terminations**
- **Contact design provides uniform latching of contacts and housing with connector cover**
- **Recessed cover with cable alignment feature**
- **Housing, cover and strain relief made of UL94V-0 rated thermoplastic material**
- **Selected 10 thru 64 position configurations available**
- **Accepts wire size range 28-26 AWG [0.08-0.15 mm²], solid or stranded**
- **Snap-on strain relief and choice of pull tabs available**
- **One-step termination with AMP-LATCH Novo tooling**
- **Recognized under the Component Program of Underwriters Laboratories Inc. File No. E28476**
- **Certified by the Canadian Standards Association, File No. LR 7189**

Electrical Characteristics:

Contact Current Rating — 1 ampere (continuous)

Operating Temperature — -55°C to +105°C

Dielectric Withstanding Voltage:

Receptacles (all) — 1000 Volts, RMS

Pin Connectors — 500 Volts, RMS

Ejection Style Pin Headers (all) — 1000 Volts, RMS

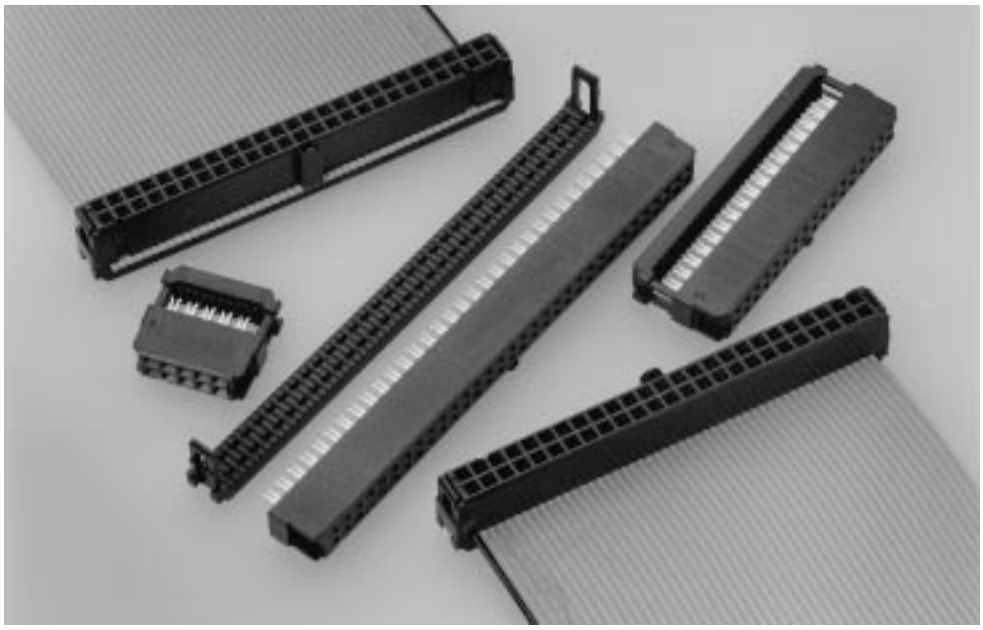

AMP-LATCH connectors use insulation displacement contacts (IDC), where each contact has a slotted-beam geometry to mass terminate the conductors. As a wire is pressed down into the slot, the beam tips pierce and displace the insulation. As the conductor is pressed farther into the slot, the contact provides sufficient conductor deformation to achieve a gas tight interface.

The design of the contact supplies residual spring pressure to maintain a long term gas tight connection. Since the connector is gas tight, it will not corrode or otherwise degrade from normal environmental exposure.

AMP-LATCH Novo receptacles offer a dual contact interface with all normal force created by metal-to-metal contact. This provides a higher degree of contact reliability.

Novo receptacles feature two rows of contacts on 2.54 X 2.54 [.100 X .100] centerlines in select sizes from 10 to 64-positions. Contacts mate with 0.642 [.0252] or round posts with 6.22 [.245] max. and 4.45 [.175] min. lengths. The Novo tuning fork contact offers a military-approved design, and at a lower cost.

No. of Positions	Cable Centerlines	PCB Area	Mating Height
20	**.050** 1.27	**0.47 in.²** 303 mm²	**0.565** 14.35
	.039 1.00	**0.134 in.²** 86.64 mm²	**0.390** 9.91
	.025 0.64	**0.213 in.²** 137 mm²	**0.584** 14.83
50	**.050** 1.27	**1.01 in.²** 645 mm²	**0.565** 14.25
	.039 1.00	**0.335 in.²** 216 mm²	**0.390** 9.91
	.025 0.64	**0.426 in.²** 275 mm²	**0.584** 14.83

Chart gives an example of a 20-position and a 50-position configuration showing the optimum pc board space and mating connector system height. These factors are of prime importance when you consider the premium placed on system space.

Novo Receptacles, Military Polarized* .100 x .100 [2.54 x 2.54] Centers

Housing Assembly with Cover (Preassembled) and Strain Relief (Optional)



Contacts mate with .025 [0.64] sq. or round pins with .245 [6.22] max. and .175 [4.45] min. lengths.

Material and Finish:

Housing, Cover & Strain Relief—94V-0 rated thermoplastic, black

Contacts—Phosphor bronze, duplex plated

Related Product Data:

Electrical Characteristics—page 4007

Mateable Connectors:

Mateable Pin Headers:

Universal—pages 4025 thru 4031
High Temperature—pages 4023, 4024
Low Profile—pages 4013 thru 4022

Accessories:

Pull Tab — Page 4011

Strain Relief — Page 4011

Keying Plug — Page 4012

Application Tooling:

R-CAM 4 Cable Assembly Machine—Page 13019

R-CAM 3A Ribbon Cable Assembly Machine—Page 13019

R-CAM 2A Ribbon Cable Assembly Machine—Page 13019

Manual Arbor Tool — **Part Number** 91085-2—Page 13015

Pneumatic Auto-Cycle Tool — **Part Number** 91112-3—Page 13016

Technical Documents:

Product Specifications
108-40000 Novo and Novo Stackable Receptacles; 108-40004 Ribbon Cable, PVC Insulated

Application Specification
114-40005 Ribbon Cable Connectors

*These receptacles can be used in applications requiring non-polarization, as well as military polarization.

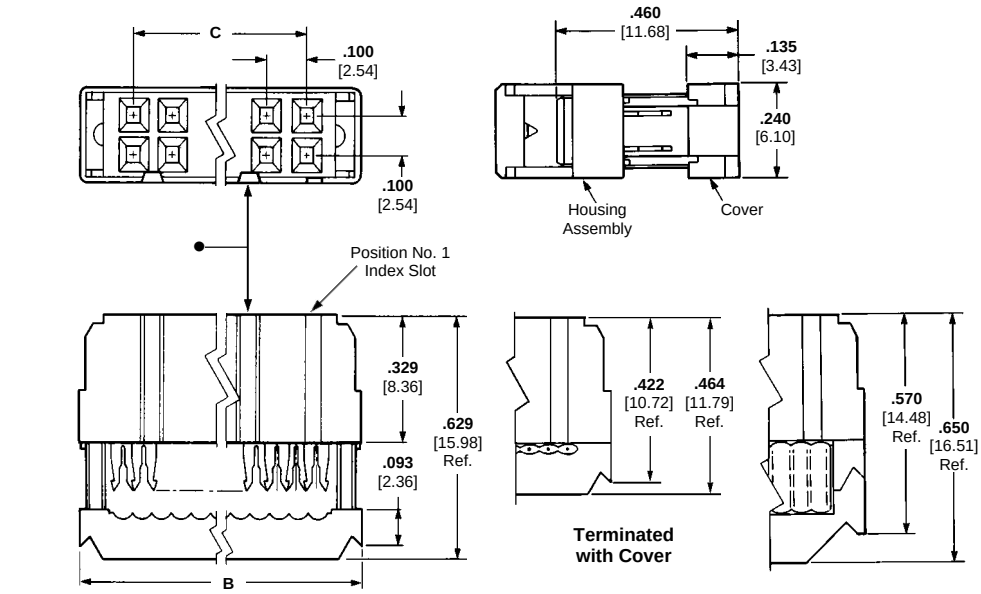

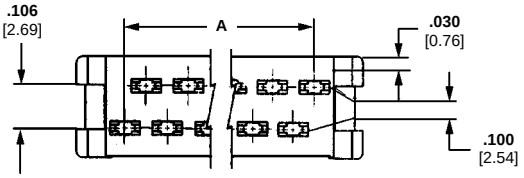

Housing Assembly and Cover

●There is no polarization slot on this end of 10- and 14-position receptacles.

No. of Positions	Dimensions A	Dimensions B	Dimensions C	Contact Plating	Strain Relief Part Numbers	Receptacle (Preassembled)
10	**.450** 11.43	**.680** 17.27	**.400** 10.16	Duplex[1]	499252-5	499997-1
				Duplex[2]	499252-5	746290-1
14	**.650** 16.51	**.880** 22.35	**.600** 15.24	Duplex[1]	499252-9	499997-2
				Duplex[2]	499252-9	746290-2
16	**.750** 19.05	**.980** 24.89	**.700** 17.78	Duplex[1]	499252-8	499997-3
				Duplex[2]	499252-8	746290-3
20	**.950** 24.13	**1.180** 29.97	**.900** 22.86	Duplex[1]	499252-2	499997-4
				Duplex[2]	499252-2	746290-4
24	**1.150** 29.21	**1.380** 35.05	**1.100** 27.94	Duplex[1]	1-499252-0	499997-5
				Duplex[2]	1-499252-0	746290-5
26	**1.250** 31.75	**1.480** 37.59	**1.200** 30.48	Duplex[1]	499252-3	499997-6
				Duplex[2]	499252-3	746290-6
30	**1.450** 36.83	**1.680** 42.67	**1.400** 35.56	Duplex[1]	1-499252-2	499997-7
				Duplex[2]	1-499252-2	746290-7
34*	**1.650** 41.91	**1.880** 47.75	**1.600** 40.64	Duplex[1]	499252-6	499997-8
				Duplex[2]	499252-6	746290-8
40*	**1.950** 49.53	**2.180** 55.37	**1.900** 48.26	Duplex[1]	499252-1	499997-9
				Duplex[2]	499252-1	746290-9
50*	**2.450** 62.23	**2.680** 68.07	**2.400** 60.96	Duplex[1]	499252-4	1-499997-0
				Duplex[2]	499252-4	1-746290-0
60	**2.950** 74.93	**3.180** 80.77	**2.900** 73.66	Duplex[1]	499252-7	1-499997-1
				Duplex[2]	499252-7	1-746290-1
64	**3.150** 80.01	**3.380** 85.85	**3.100** 78.74	Duplex[1]	1-499252-3	1-499997-2
				Duplex[2]	1-499252-3	1-746290-2

[1] .000015 [0.00038] gold on post/pin mating end, .000100-.000200 [0.00254-0.00508] bright tin-lead on termination end, with entire contact underplated .000050 [0.00127] nickel.

[2] .000030 [0.00076] gold on post/pin mating end, .000100-.000200 [0.00254-0.00508] bright tin-lead on termination end, with entire contact underplated .000050 [0.00127] nickel.

Note: These receptacles include a housing assembly and cover (preassembled). Strain reliefs may be purchased separately using the component part nos. listed above and on page 4011.

Products for Industrial & Commercial Applications
Dimensions are shown for reference purposes only.
Dimensions are in inches and millimeters unless otherwise specified. Values in brackets are metric equivalents.
Specifications subject to change.
Technical Support Center
1-800-522-6752
www.tycoelectronics.com

Novo Receptacles, Center & Military Polarized* .100 x .100 [2.54 x 2.54] Centers

Housing Assembly with Cover (Preassembled) and Strain Relief (Optional)



Contacts mate with .025 [0.64] sq. or round pins with .245 [6.22] max. and .175 [4.45] min. lengths.

Material and Finish:

Housing, Cover & Strain Relief—94V-0 rated thermoplastic, black

Contacts—Phosphor bronze, duplex plated

Related Product Data:

Electrical Characteristics—page 4007

Mateable Connectors:

Mateable Pin Headers:

Universal—pages 4025 thru 4031
High Temperature—pages 4023, 4024
Low Profile—pages 4013 thru 4022

Accessories:

Pull Tab — Page 4011

Strain Relief — Page 4011

Keying Plug — Page 4012

Application Tooling:

R-CAM 4 Cable Assembly Machine—Page 13019

R-CAM 3A Ribbon Cable Assembly Machine—Page 13019

R-CAM 2A Ribbon Cable Assembly Machine—Page 13019

Manual Arbor Tool —
Part Number 91085-2—Page 13015

Pneumatic Auto-Cycle Tool —
Part Number 91112-3—Page 13016

Technical Documents:

Product Specifications
108-40000 Novo and Novo Stackable Receptacles; 108-40004 Ribbon Cable, PVC Insulated

Application Specification
114-40005 Ribbon Cable Connectors

*These receptacles can be used in applications requiring center polarization.

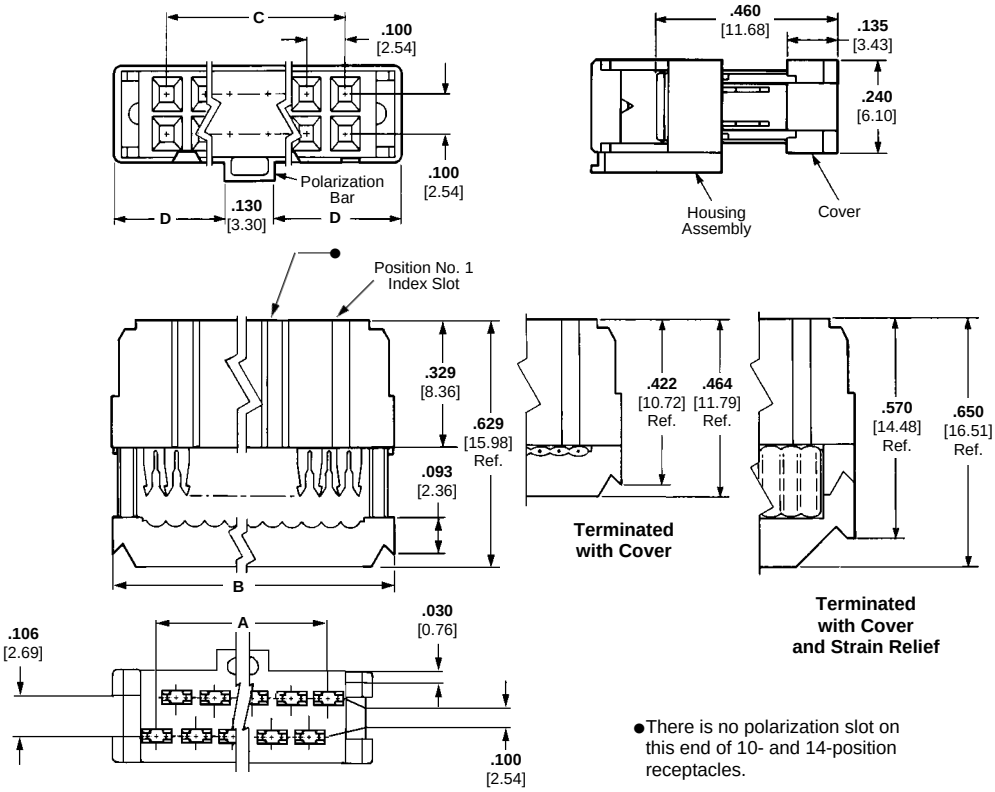

Housing Assembly and Cover

●There is no polarization slot on this end of 10- and 14-position receptacles.

No. of Positions	Dimensions A	B	C	D	Contact Plating	Strain Relief Part Numbers	Receptacle (Preassembled)
10	**.450** 11.43	**.680** 17.27	**.400** 10.16	**.275** 6.99	Duplex[1]	499252-5	746285-1
					Duplex[2]	499252-5	746288-1
14	**.650** 16.51	**.880** 22.35	**.600** 15.24	**.375** 9.53	Duplex[1]	499252-9	746285-2
					Duplex[2]	499252-9	746288-2
16	**.750** 19.05	**.980** 24.89	**.700** 17.78	**.425** 10.80	Duplex[1]	499252-8	746285-3
					Duplex[2]	499252-8	746288-3
20	**.950** 24.13	**1.180** 29.97	**.900** 22.86	**.525** 13.34	Duplex[1]	499252-2	746285-4
					Duplex[2]	499252-2	746288-4
24	**1.150** 29.21	**1.380** 35.05	**1.100** 27.94	**.625** 15.88	Duplex[1]	1-499252-0	746285-5
					Duplex[2]	1-499252-0	746288-5
26	**1.250** 31.75	**1.480** 37.59	**1.200** 30.48	**.675** 17.15	Duplex[1]	499252-3	746285-6
					Duplex[2]	499252-3	746288-6
30	**1.450** 36.83	**1.680** 42.67	**1.400** 35.56	**.775** 19.69	Duplex[1]	1-499252-2	746285-7
					Duplex[2]	1-499252-2	746288-7
34*	**1.650** 41.91	**1.880** 47.75	**1.600** 40.64	**.875** 22.23	Duplex[1]	499252-6	746285-8
					Duplex[2]	499252-6	746288-8
40*	**1.950** 49.53	**2.180** 55.37	**1.900** 48.26	**1.025** 26.04	Duplex[1]	499252-1	746285-9
					Duplex[2]	499252-1	746288-9
50*	**2.450** 62.23	**2.680** 68.07	**2.400** 60.96	**1.275** 32.39	Duplex[1]	499252-4	1-746285-0
					Duplex[2]	499252-4	1-746288-0
60	**2.950** 74.93	**3.180** 80.77	**2.900** 73.66	**1.525** 38.74	Duplex[1]	499252-7	1-746285-1
					Duplex[2]	499252-7	1-746288-1
64	**3.150** 80.01	**3.380** 85.85	**3.100** 78.74	**1.625** 41.28	Duplex[1]	1-499252-3	1-746285-2
					Duplex[2]	1-499252-3	1-746288-2

[1] .000015 [0.00038] gold on post/pin mating end, .000100-.000200 [0.00254-0.00508] bright tin-lead on termination end, with entire contact underplated .000050 [0.00127] nickel.

[2] .000030 [0.00076] gold on post/pin mating end, .000100-.000200 [0.00254-0.00508] bright tin-lead on termination end, with entire contact underplated .000050 [0.00127] nickel.

Note: These receptacles include a housing assembly and cover (preassembled). Strain reliefs may be purchased separately using the component part nos. listed above and on page 4011.

Products for Industrial & Commercial Applications
Dimensions are shown for reference purposes only.
Dimensions are in inches and millimeters unless otherwise specified. Values in brackets are metric equivalents.
Specifications subject to change.
Technical Support Center
1-800-522-6752
www.tycoelectronics.com

Receptacles, Tulip Design, Military or Center & Military Polarized .100 x .100 [2.54 x 2.54] Centers

Material and Finish:

Housing, Cover & Strain Relief—94V-0 rated glass reinforced thermoplastic, blue

Contacts—Beryllium copper, duplex plated .000030 [0.00076] min. gold over .000050 [0.00127] nickel in contact area; tin/lead over nickel in termination area

Related Product Data:

Electrical Characteristics—page 4007

Mateable Connectors:

Mateable Pin Headers:

Low Profile—pages 4013 thru 4022

High Temperature—pages 4023, 4024

Universal—pages 4025 thru 4031

Accessories:

Pull Tab — Page 4011

Application Tooling:

Hand Tool:	779-2100
use Die	779-2151
Bench Press (manual):	779-3200
use Platen	779-3130
use Base Plate	779-3151
Bench Press (pneumatic):	779-3500XT
use Platen	779-3130
use Base Plate	779-3151

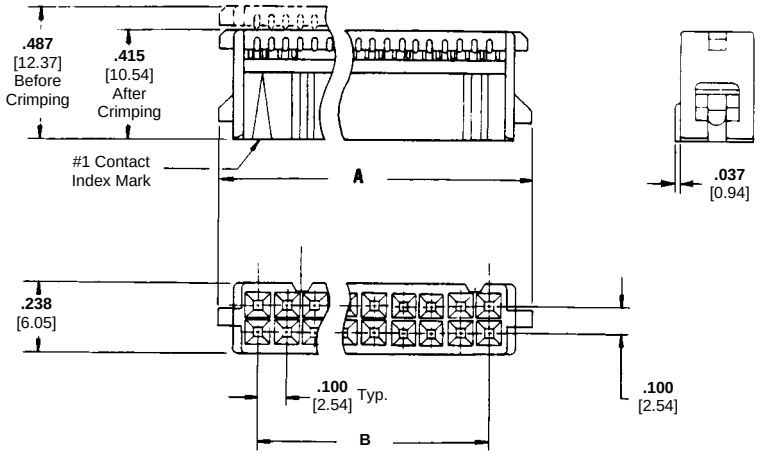

Military Polarized Receptacle Shown

No. of Positions	Dimensions A	Dimensions B	Military Polarized Receptacle	Military Polarized Receptacle w/Strain Relief	Center & Military Polarized Receptacle	Center & Military Polarized Receptacle w/Strain Relief
6	**.476** 12.09	**.200** 5.08	609-0600M	609-0601M	609-0630	609-0641
10	**.676** 17.17	**.400** 10.16	609-1000M	609-1001M	609-1030	609-1041
14	**.876** 22.25	**.600** 15.24	609-1400M	609-1401M	609-1430	609-1441
16	**.976** 24.79	**.700** 17.78	609-1600M	609-1601M	609-1630	609-1641
20	**1.176** 29.87	**.900** 22.86	609-2000M	609-2001M	609-2030	609-2041
24	**1.376** 34.95	**1.100** 27.94	609-2400M	609-2401M	609-2430	609-2441
26	**1.476** 37.49	**1.200** 30.48	609-2600M	609-2601M	609-2630	609-2641
34	**1.876** 47.65	**1.600** 40.64	609-3400M	609-3401M	609-3430	609-3441
36	**1.976** 50.19	**1.700** 43.18	609-3600M	609-3601M	609-3630	609-3641
40	**2.176** 55.27	**1.900** 48.26	609-4000M	609-4001M	609-4030	609-4041
50	**2.676** 67.97	**2.400** 60.95	609-5000M	609-5001M	609-5030	609-5041
60	**3.176** 80.67	**2.900** 73.66	609-6000M	609-6001M	609-6030	609-6041
64	**3.376** 85.75	**3.100** 78.74	609-6400M	609-6401M	609-6430	609-6441

Note: Before ordering, see Cross Reference in Section 15 for equivalent Tyco Electronics Part Number.

Products for Industrial & Commercial Applications
Dimensions are shown for reference purposes only.
Dimensions are in inches and millimeters unless otherwise specified. Values in brackets are metric equivalents.
Specifications subject to change.
Technical Support Center
1-800-522-6752
www.tycoelectronics.com

Strain Relief for Novo Receptacles

Material and Finish:

UL 94V-0 thermoplastic, color: black

Related Product Data:

Use with:

Receptacles—pages 4008, 4009

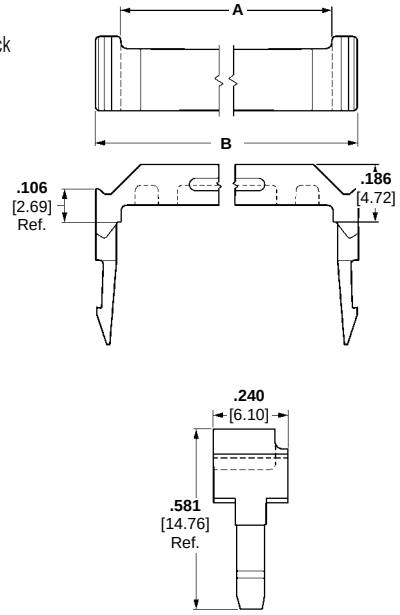

No. of Positions	Dimensions A	Dimensions B	Strain Relief Part Numbers
10	**.520** 13.21	**.680** 17.27	499252-5
14	**.720** 18.29	**.880** 22.35	499252-9
16	**.820** 20.83	**.980** 24.89	499252-8
20	**1.020** 25.91	**1.180** 29.97	499252-2
24	**1.220** 30.99	**1.380** 35.05	1-499252-0
26	**1.320** 33.53	**1.480** 37.59	499252-3
30	**1.520** 38.61	**1.680** 42.67	1-499252-2
34	**1.720** 43.69	**1.880** 47.75	499252-6
40	**2.020** 51.31	**2.180** 55.37	499252-1
44	**2.220** 56.39	**2.380** 60.45	1-499252-1
50	**2.520** 64.01	**2.680** 68.07	499252-4
60	**3.020** 76.71	**3.180** 80.77	499252-7
64	**3.220** 81.79	**3.380** 85.85	1-499252-3

Pull Tabs, Permanent (for Receptacles)

Material:

Natural color PVC, 94-VTM-1 rating (thin material)

Related Product Data:

Use with:

Receptacles—pages 4008 thru 4010

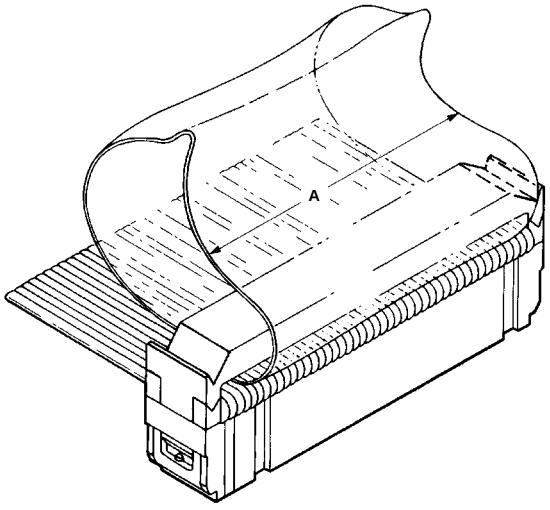

Note: This pull tab is installed manually between the cover and strain relief.

No. of Positions	Dimension A	Pull Tab Part Numbers
—	**120.0** 3048.0	88450-1
10	**0.44** 11.18	88450-2
14	**0.64** 16.26	88450-3
16	**0.74** 18.80	88450-4
20	**0.88** 22.35	88450-5
24	**1.08** 27.43	88450-6
26	**1.18** 29.97	88450-7
30	**1.38** 35.05	1-88450-2
34	**1.58** 40.13	88450-8
40	**1.82** 46.23	88450-9
50	**2.32** 58.93	1-88450-0
60	**2.80** 71.12	1-88450-1

Products for Industrial & Commercial Applications
Dimensions are shown for reference purposes only.
Dimensions are in inches and millimeters unless otherwise specified. Values in brackets are metric equivalents.
Specifications subject to change.
Technical Support Center
1-800-522-6752
www.tycoelectronics.com

Keying Plug for Novo Receptacles

Part Number 499712-1

Material:
Black thermoplastic, 94V-0 rated

Related Product Data:
Use in:
Novo—pages 4008, 4009

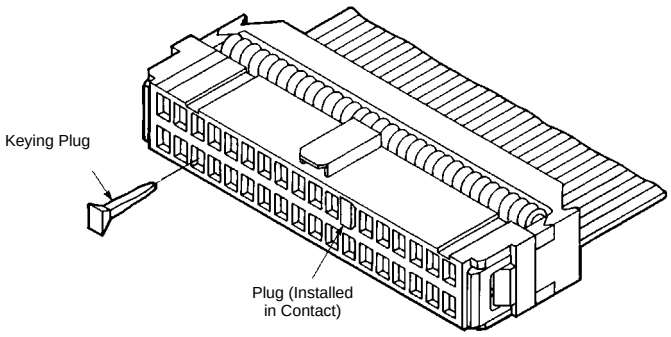

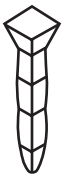

Key Plug
(Plugs into Contact)

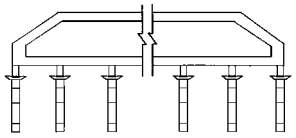

Alternate Configuration
Keying Plug Part Number 104072-1
(10 Keying Plugs per Comb)

Products for Industrial & Commercial Applications

Dimensions are shown for reference purposes only.

Dimensions are in inches and millimeters unless otherwise specified. Values in brackets are metric equivalents.

Specifications subject to change.

Technical Support Center
1-800-522-6752
www.tycoelectronics.com

Low Profile Headers — Shrouded with .150 [3.18] End Dimension Double Row, .100 x .100 [2.54 x 2.54] Centers, .120 [3.04] Solder Tail

.025 [0.64] Square Straight Post

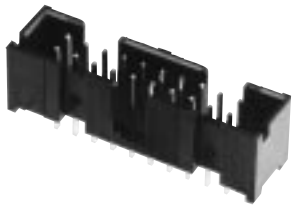

Material and Finish:

Housing—Black thermoplastic, 94V-0 rated, flame retardant

Contacts—Copper alloy, duplex plated

Plating Specifications:

Duplex[1] — .000015 [0.00038] gold on contact area, .000100-.000200 [0.00254-0.00508] tin-lead on solder area, with entire post underplated .000050 [0.00127] nickel

Duplex[2] — .000030 [0.00076] gold on contact area, .000100-.000200 [0.00254-0.00508] tin-lead on solder area, with entire post underplated .000050 [0.00127] nickel

Related Product Data:

Electrical Characteristics—page 4007

Mateable Connectors:
Pages 4008 thru 4010

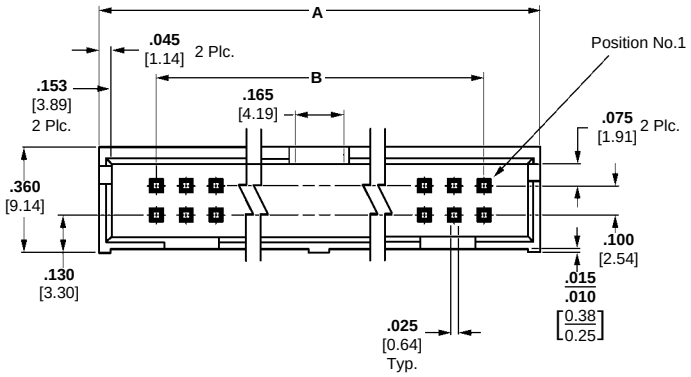

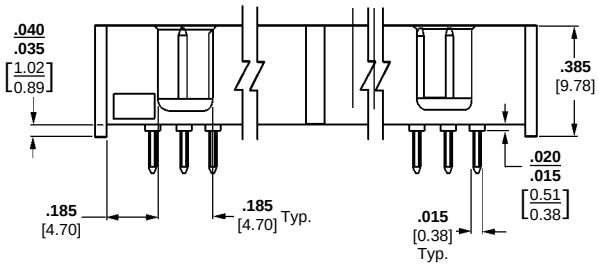

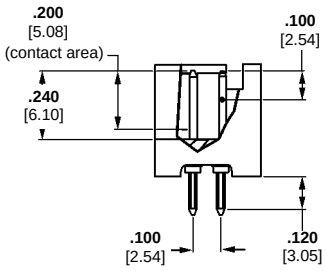

No. of Positions	Dimensions		Part Numbers Post Plating	
	A	B	Duplex[1]	Duplex[2]
10	**.800** 20.32	**.400** 10.16	103308-1	103309-1
14	**1.000** 25.40	**.600** 15.24	103308-2	103309-2
16	**1.100** 27.94	**.700** 17.78	103308-3	103309-3
20	**1.300** 33.02	**.900** 22.86	103308-5	103309-5
24	**1.500** 38.10	**1.100** 27.94	1-103308-3	—
26	**1.600** 40.64	**1.200** 30.48	103308-6	103309-6
34	**2.000** 50.80	**1.600** 40.64	103308-7	103309-7
40	**2.300** 58.42	**1.900** 48.26	103308-8	103309-8
44	**2.500** 63.50	**2.100** 53.34	103308-9	103309-9
50	**2.800** 71.12	**2.400** 60.96	1-103308-0	1-103309-0
60	**3.300** 83.82	**2.900** 73.66	1-103308-2	1-103309-2

Products for Industrial & Commercial Applications
Dimensions are shown for reference purposes only.
Dimensions are in inches and millimeters unless otherwise specified. Values in brackets are metric equivalents.
Specifications subject to change.
Technical Support Center
1-800-522-6752
www.tycoelectronics.com

Low Profile Headers — Shrouded with .150 [3.18] End Dimension Double Row, .100 x .100 [2.54 x 2.54] Centers, .102 [2.59] and .610 [15.49] Solder Tail

.025 [0.64] Square Straight Post



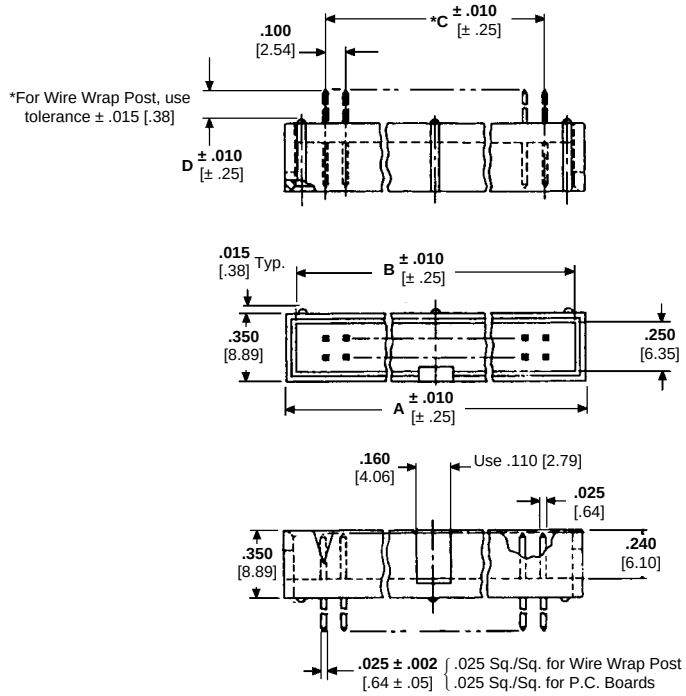

Material and Finish:

Housing—94V-0 rated glass reinforced thermoplastic, blue

Contacts—Phosphor bronze, plated .000030 [0.00076] min. gold over .000050 [0.00127] min. nickel plating

Related Product Data:

Electrical Characteristics—page 4007

Mateable Connectors:
Pages 4008 thru 4010

No. of Positions	Dimensions A	Dimensions B	Dimensions C	Part Numbers Dimension "D" .102 [2.59] For .062 [1.57] P.C. Boards	Part Numbers Dimension "D" .610 [15.49] Wire Wrap Post
6	**.600** 15.24	**.500** 12.70	**.200** 5.80	609-0627	609-0657
8	**.700** 17.78	**.600** 15.24	**.300** 7.62	609-0827	—
10	**.800** 20.32	**.700** 17.78	**.400** 10.16	609-1027	609-1057
12	**.900** 22.86	**.800** 20.32	**.500** 17.70	609-1227	—
14	**1.000** 25.40	**.900** 22.86	**.600** 15.24	609-1427	609-1457
16	**1.100** 27.94	**1.000** 25.40	**.700** 17.75	609-1627	609-1657
20	**1.300** 33.02	**1.200** 30.48	**.900** 22.86	609-2027	609-2057
24	**1.500** 38.10	**1.400** 35.56	**1.100** 27.94	609-2427	609-2457
26	**1.600** 40.64	**1.500** 38.10	**1.200** 30.48	609-2627	609-2657
30	**1.800** 45.72	**1.700** 43.18	**1.400** 35.56	609-3027	609-3057
34	**2.000** 50.80	**1.900** 48.26	**1.600** 40.64	609-3427	609-3457
40	**2.300** 58.42	**2.200** 55.88	**1.900** 48.26	609-4027	609-4057
50	**2.800** 71.12	**2.700** 68.58	**2.400** 60.96	609-5027	609-5057
60	**3.300** 83.82	**3.200** 81.28	**2.900** 73.66	609-6027	609-6057
64	**3.500** 88.90	**3.400** 86.36	**3.100** 78.74	609-6427	609-6457

Note: Before ordering, see Cross Reference in Section 15 for equivalent Tyco Electronics Part Number.

Products for Industrial & Commercial Applications
Dimensions are shown for reference purposes only.
Dimensions are in inches and millimeters unless otherwise specified. Values in brackets are metric equivalents.
Specifications subject to change.
Technical Support Center
1-800-522-6752
www.tycoelectronics.com

Low Profile Headers — Shrouded with .150 [3.18] End Dimension Double Row, .100 x .100 [2.54 x 2.54] Centers, .135 [3.43] Solder Tail

.025 [0.64] Square Right-Angle Post

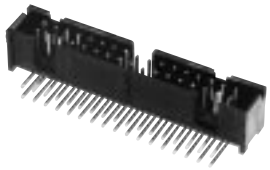

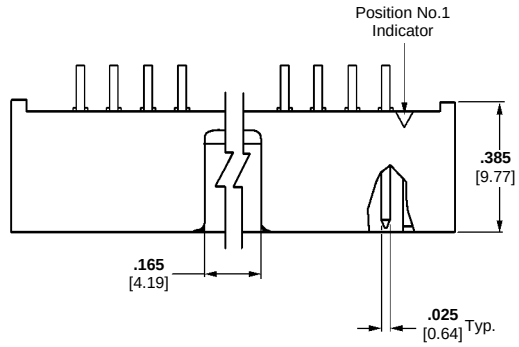

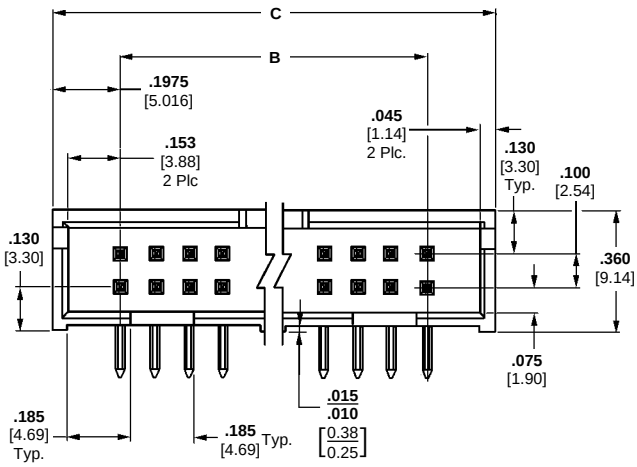

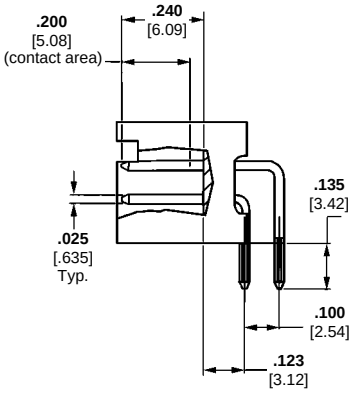

Material and Finish:

Housing—Black thermoplastic, 94V-0 rated, flame retardant

Contacts—Copper alloy, duplex plated

Plating Specifications:

Duplex[1] — .000015 [0.00038] gold on contact area, .000100-.000200 [0.00254-0.00508] tin-lead on solder area, with entire post underplated .000050 [0.00127] nickel

Duplex[2] — .000030 [0.00076] gold on contact area, .000100-.000200 [0.00254-0.00508] tin-lead on solder area, with entire post underplated .000050 [0.00127] nickel

Related Product Data:

Electrical Characteristics—page 4007

Mateable Connectors:
Pages 4008 thru 4010

Accessories:

Snap-In Polarizer — page 4032

No. of Positions	Dimensions B	Dimensions C	Post Plating	Part Numbers
10	**.400** 10.16	**.800** 20.32	Duplex[1]	103310-1
			Duplex[2]	103311-1
14	**.600** 15.24	**1.000** 25.40	Duplex[1]	103310-2
			Duplex[2]	103311-2
16	**.700** 17.78	**1.100** 27.94	Duplex[1]	103310-3
			Duplex[2]	103311-3
20	**.900** 22.86	**1.300** 33.02	Duplex[1]	103310-5
			Duplex[2]	103311-5
26	**1.200** 30.48	**1.600** 40.64	Duplex[1]	103310-6
			Duplex[2]	103311-6
34	**1.600** 40.64	**2.000** 50.80	Duplex[1]	103310-7
			Duplex[2]	103311-7
40	**1.900** 48.26	**2.300** 58.42	Duplex[1]	103310-8
			Duplex[2]	103311-8
44	**2.100** 53.34	**2.500** 63.50	Duplex[2]	103311-9
50	**2.400** 60.96	**2.800** 71.12	Duplex[1]	1-103310-0
			Duplex[2]	1-103311-0
60	**2.900** 73.66	**3.300** 83.82	Duplex[1]	1-103310-2
			Duplex[2]	1-103311-2

Products for Industrial & Commercial Applications
Dimensions are shown for reference purposes only.
Dimensions are in inches and millimeters unless otherwise specified. Values in brackets are metric equivalents.
Specifications subject to change.
Technical Support Center
1-800-522-6752
www.tycoelectronics.com

Low Profile Headers—Shrouded with .150 [3.81] End Dimension, Double Row, .100 x .100 [2.54 x 2.54] Centers, .102 [2.59] and .610 [15.49] Solder Tail

.025 [0.64] Square Right-Angle Post

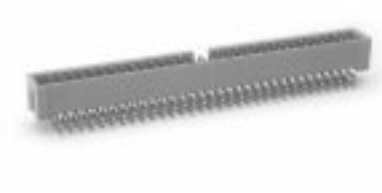

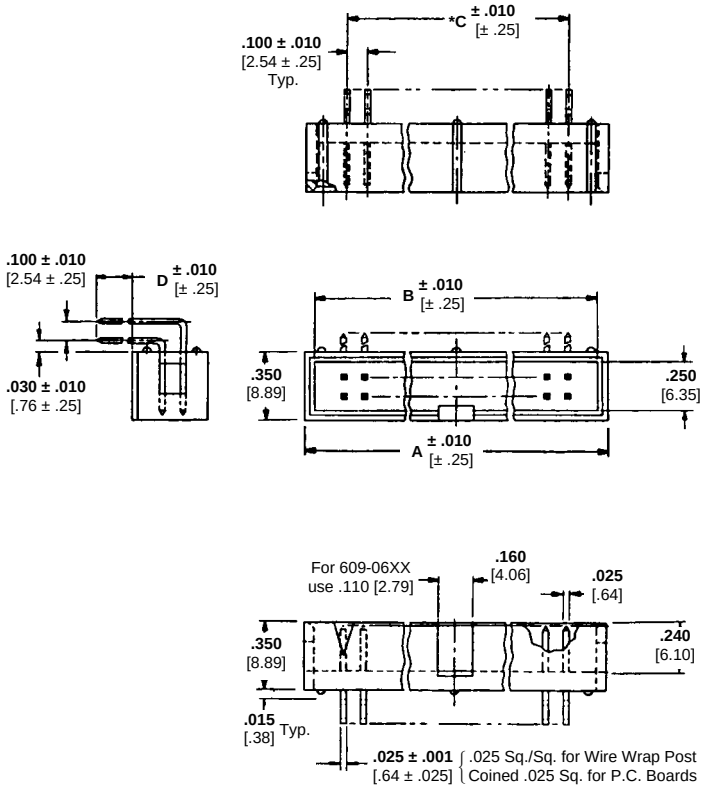

Material and Finish:

Housing—94V-0 rated glass reinforced thermoplastic, blue

Contacts—Phosphor bronze, plated .000030 [0.00076] min. gold over .000050 [0.00127] min. nickel plating

Related Product Data:

Electrical Characteristics—page 4007

Mateable Connectors:
Pages 4008 thru 4010

No. of Positions	Dimensions A	Dimensions B	Dimensions C	Part Numbers Dimension "D" .102 [2.59] For .062 [1.57] P.C. Boards	Part Numbers Dimension "D" .610 [15.49] Wire Wrap Post
6	**.600** 15.24	**.500** 12.70	**.200** 5.80	609-0607	609-0647
10	**.800** 20.32	**.700** 17.78	**.400** 10.16	609-1007	609-1047
14	**1.000** 25.40	**.900** 22.86	**.600** 15.24	609-1407	609-1447
16	**1.100** 27.94	**1.000** 25.40	**.700** 17.75	609-1607	609-1647
20	**1.300** 33.02	**1.200** 30.48	**.900** 22.86	609-2007	609-2047
24	**1.500** 38.10	**1.400** 35.56	**1.100** 27.94	609-2407	609-2447
26	**1.600** 40.64	**1.500** 38.10	**1.200** 30.48	609-2607	609-2647
34	**2.000** 50.80	**1.900** 48.26	**1.600** 40.64	609-3407	609-3447
40	**2.300** 58.42	**2.200** 55.88	**1.900** 48.26	609-4007	609-4047
50	**2.800** 71.12	**2.700** 68.58	**2.400** 60.96	609-5007	609-5047
60	**3.300** 83.82	**3.200** 81.28	**2.900** 73.66	609-6007	609-6047
64	**3.500** 88.90	**3.400** 86.36	**3.100** 78.74	609-6407	609-6447

Note: Before ordering, see Cross Reference in Section 15 for equivalent Tyco Electronics Part Number.

Products for Industrial & Commercial Applications
Dimensions are shown for reference purposes only.
Dimensions are in inches and millimeters unless otherwise specified. Values in brackets are metric equivalents.
Specifications subject to change.
Technical Support Center
1-800-522-6752
www.tycoelectronics.com

Low Profile Headers — Shrouded with Ejection Latches and .150 [3.81] End Dimension, Double Row, .100 x .100 [2.54 x 2.54] Centers, .135 [3.42] Solder Tail

.025 [0.64] Square Right-Angle Post

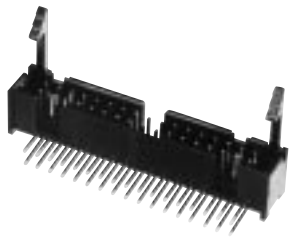

Material and Finish:

Housing—Black thermoplastic, 94V-0 rated

Contacts—Copper alloy, duplex plated .000030 [0.00076] gold on contact area, .000100-.000200 [0.00254-0.00508] tin-lead on solder area, with entire post underplated .000050 [0.00127] nickel

Related Product Data:

Electrical Characteristics—page 4007

Mateable Connectors:
Pages 4008 thru 4010

Accessories:

Snap-In Polarizer — page 4032

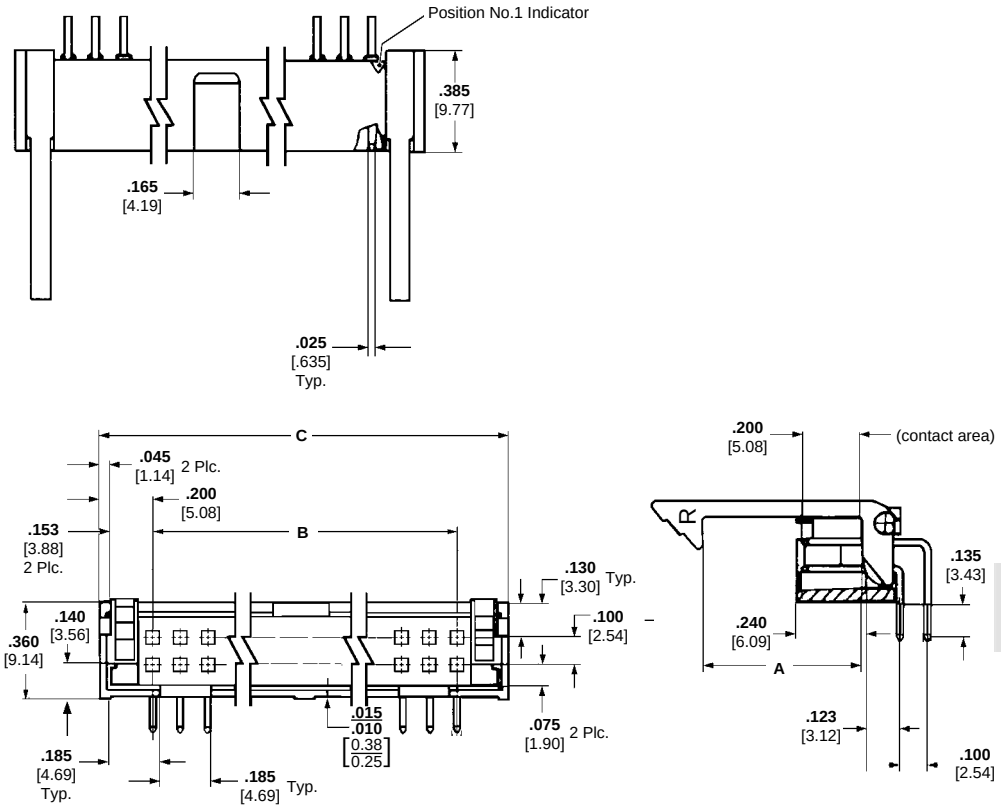

No. of Positions	Dimensions B	Dimensions C	Latching Height (See Notes 1 & 2) A	Part Numbers
10	**.400** 10.16	**.800** 20.32	**.585** 14.9	104130-1
			.435 11.0	104315-1
14	**.600** 15.24	**1.000** 25.40	**.585** 14.9	104130-2
			.435 11.0	104315-2
16	**.700** 17.78	**1.100** 27.94	**.585** 14.9	104130-3
			.435 11.0	104315-3
20	**.900** 22.86	**1.300** 33.02	**.585** 14.9	104130-4
			.435 11.0	104315-4
26	**1.200** 30.48	**1.600** 40.64	**.585** 14.9	104130-5
			.435 11.0	104315-5
34	**1.600** 40.64	**2.000** 50.80	**.585** 14.9	104130-6
			.435 11.0	104315-6
40	**1.900** 48.26	**2.300** 58.42	**.585** 14.9	104130-7
			.435 11.0	104315-7
50	**2.400** 60.96	**2.800** 71.12	**.585** 14.9	104130-9
			.435 11.0	104315-9
60	**2.900** 73.66	**3.300** 83.82	**.585** 14.9	1-104130-0
			.435 11.0	1-104315-0

Notes: 1. .585 [14.9] latching height to be used when mating to a receptacle with strain relief.
2. .435 [11.0] latching height to be used when mating to a receptacle without strain relief.

Products for Industrial & Commercial Applications
Dimensions are shown for reference purposes only.
Dimensions are in inches and millimeters unless otherwise specified. Values in brackets are metric equivalents.
Specifications subject to change.
Technical Support Center
1-800-522-6752
www.tycoelectronics.com

Low Profile Headers—Shrouded with Ejection Latches and .150 [3.81] End Dimension, Double Row, .100 x .100 [2.54 x 2.54] Centers, .102 [2.59] Solder Tail

.025 [0.64] Square Right-Angle Post



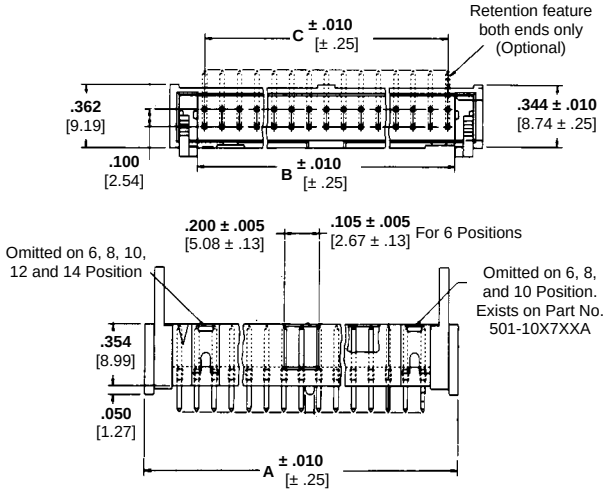

Right Angle Rentention Pin

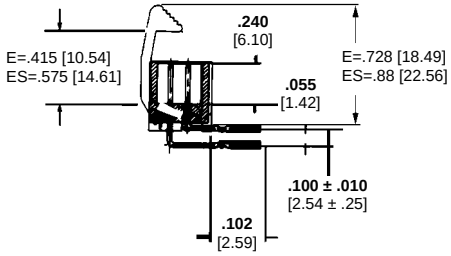

Material and Finish:

Housing—94V-0 rated glass reinforced thermoplastic, blue

Contacts—Phosphor bronze, plated .000030 [0.00076] min. gold over .000050 [0.00127] min. nickel .025 sq. pin w/coined edges

Related Product Data:

Electrical Characteristics—page 4007

Mateable Connectors:
Pages 4008 thru 4010

501 - XX XX ☐

# of Positions

Tail Style

***E** (Ejector)*
***ES** Ejector for Strain Relief*

Note: PCB retention feature available. Consult Tyco Electronics

No. of Positions	Dimensions A	Dimensions B	Dimensions C	Part Numbers
6	**.600** 15.24	**.280** 7.11	**.200** 5.08	501-0607XX
10	**.800** 20.32	**.480** 12.19	**.400** 10.16	501-1007XX
12	**.900** 22.86	**.580** 14.73	**.500** 12.70	501-1207XX
14	**1.000** 25.40	**.680** 17.27	**.600** 15.24	501-1407XX
16	**1.100** 27.94	**.780** 19.81	**.700** 17.78	501-1607XX
20	**1.300** 33.02	**.980** 24.89	**.900** 22.86	501-2007XX
24	**1.500** 38.10	**1.180** 29.97	**1.100** 27.94	501-2407XX
26	**1.600** 40.64	**1.280** 32.51	**1.200** 30.48	501-2607XX
30	**1.800** 45.72	**1.480** 37.59	**1.400** 35.56	501-3007XX
34	**2.000** 50.80	**1.680** 42.67	**1.600** 40.64	501-3407XX
40	**2.300** 58.42	**1.980** 50.29	**1.900** 48.26	501-4007XX
50	**2.800** 71.12	**2.480** 62.99	**2.400** 60.96	501-5007XX
60	**3.300** 83.82	**2.980** 75.69	**2.900** 73.66	501-6007XX
64	**3.500** 88.90	**3.180** 80.77	**3.100** 78.74	501-6407XX

Note: Before ordering, see Cross Reference in Section 15 for equivalent Tyco Electronics Part Number.

Products for Industrial & Commercial Applications
Dimensions are shown for reference purposes only.
Dimensions are in inches and millimeters unless otherwise specified. Values in brackets are metric equivalents.
Specifications subject to change.
Technical Support Center
1-800-522-6752
www.tycoelectronics.com

Low Profile Headers—Shrouded with Ejection Latches and .150 [3.81] End Dimension, Double Row, .100 x .100 [2.54 x 2.54] Centers

.025 [0.64] Square Right-Angle Post



Material and Finish:

Housing—94V-0 rated glass reinforced thermoplastic, blue

Contacts—Phosphor bronze, plated .000030 [0.00076] min. gold over .000050 [0.00127] min. nickel in contact area; tin/lead over nickel in termination area

Related Product Data:

Electrical Characteristics—page 4007

Mateable Connectors:
Pages 4008 thru 4010

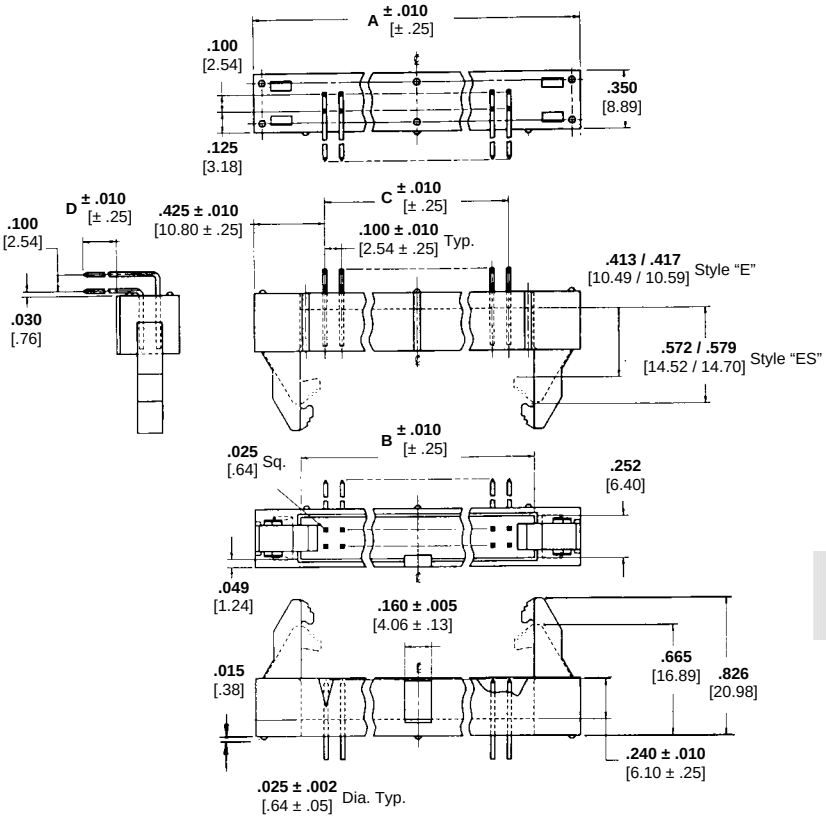

609 - XX XX

- XX — *# of Positions*
- XX — *Tail Style*
- *E (Ejector)*
- *ES Ejector for Strain Relief*

Note: .610 Wire Wrap Post and PCB retention versions available. Consult Tyco Electronics.

No. of Positions	Dimensions A	Dimensions B	Dimensions C	Part Numbers Dimension "D" .102 [2.59] For .062 [1.57] P.C. Boards	Part Numbers Dimension "D" .165 [4.19] For .125 [3.18] P.C. Boards
8	**1.150** 29.21	**.600** 15.24	**.300** 7.26	609-0807XX	—
10	**1.250** 31.75	**.700** 17.78	**.400** 10.16	609-1007XX	609-1017XX
14	**1.450** 36.83	**.900** 22.86	**.600** 15.24	609-1407XX	609-1417XX
16	**1.550** 39.37	**1.000** 25.40	**.700** 17.78	609-1607XX	609-1617XX
20	**1.750** 44.45	**1.200** 30.48	**.900** 22.86	609-2007XX	609-2017XX
24	**1.950** 49.53	**1.400** 35.55	**1.100** 27.94	609-2407XX	609-2417XX
26	**2.050** 52.07	**1.500** 38.10	**1.200** 30.48	609-2607XX	609-2617XX
30	**2.250** 57.15	**1.700** 43.18	**1.400** 35.56	609-3007XX	609-3017XX
34	**2.450** 62.23	**1.900** 48.26	**1.600** 40.64	609-3407XX	609-3417XX
40	**2.750** 69.85	**2.200** 55.88	**1.900** 48.26	609-4007XX	609-4017XX
50	**3.250** 82.55	**2.700** 68.58	**2.400** 60.96	609-5007XX	609-5017XX
60	**3.750** 95.25	**3.200** 81.28	**2.900** 73.66	609-6007XX	609-6017XX
64	**3.950** 100.33	**3.400** 86.36	**3.100** 78.74	609-6407XX	609-6417XX

Note: Before ordering, see Cross Reference in Section 15 for equivalent Tyco Electronics Part Number.

Products for Industrial & Commercial Applications
Dimensions are shown for reference purposes only.
Dimensions are in inches and millimeters unless otherwise specified. Values in brackets are metric equivalents.
Specifications subject to change.
Technical Support Center
1-800-522-6752
www.tycoelectronics.com

Low Profile Headers — Shrouded with Ejection Latches and .150 [3.18] End Dimension Double Row, .100 x .100 [2.54 x 2.54] Centers, .120 [3.05] Solder Tail

.025 [0.64] Square Straight Post

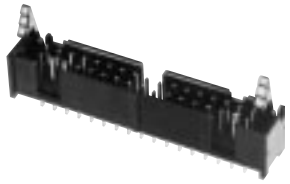

Material and Finish:

Housing—Black thermoplastic, 94V-0 rated

Contacts—Copper alloy, duplex plated .000030 [0.00076] gold on contact area, .000100-.000200 [0.00254-0.00508] tin-lead on solder area, with entire post underplated .000050 [0.00127] nickel

Related Product Data:

Electrical Characteristics—page 4007

Mateable Connectors:
Pages 4008 thru 4010

Accessories:

Snap-In Polarizer — page 4032

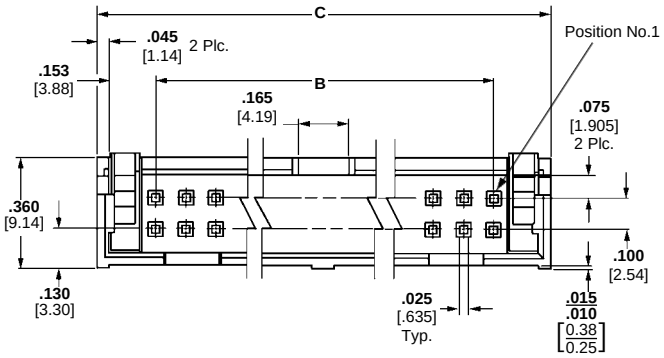

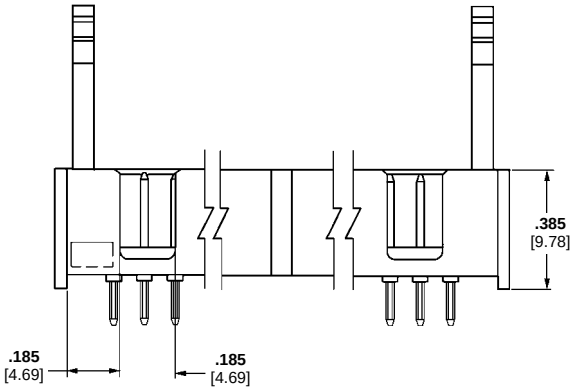

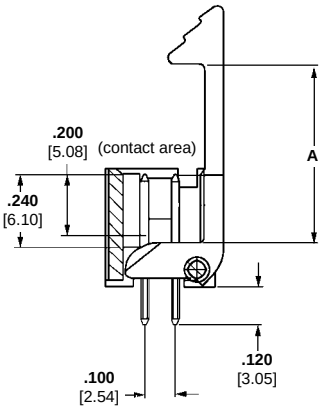

No. of Positions	Dimensions B	Dimensions C	Latching Height (See Notes 1 & 2) A	Part Numbers
10	**.400** 10.16	**.800** 20.32	**.585** 14.9	104128-1
			.435 11.0	104313-1
14	**.600** 15.24	**1.000** 25.40	**.585** 14.9	104128-2
			.435 11.0	104313-2
16	**.700** 17.78	**1.100** 27.94	**.585** 14.9	104128-3
			.435 11.0	104313-3
20	**.900** 22.86	**1.300** 33.02	**.585** 14.9	104128-4
			.435 11.0	104313-4
26	**1.200** 30.48	**1.600** 40.64	**.585** 14.9	104128-5
			.435 11.0	104313-5
34	**1.600** 40.64	**2.000** 50.80	**.585** 14.9	104128-6
			.435 11.0	104313-6
40	**1.900** 48.26	**2.300** 58.42	**.585** 14.9	104128-7
			.435 11.0	104313-7
50	**2.400** 60.96	**2.800** 71.12	**.585** 14.9	104128-9
			.435 11.0	104313-9
60	**2.900** 73.66	**3.300** 83.82	**.585** 14.9	1-104128-0
			.435 11.0	1-104313-0

Notes: 1. .585 [14.9] latching height to be used when mating to a receptacle with strain relief.
2. .435 [11.0] latching height to be used when mating to a receptacle without strain relief.

Products for Industrial & Commercial Applications
Dimensions are shown for reference purposes only.
Dimensions are in inches and millimeters unless otherwise specified. Values in brackets are metric equivalents.
Specifications subject to change.
Technical Support Center
1-800-522-6752
www.tycoelectronics.com

Low Profile Headers—Shrouded with Ejection Latches and .150 [3.81] End Dimension, Double Row, .100 x .100 [2.54 x 2.54] Centers, .102 [2.59] Solder Tail

.025 [0.64] Square Straight Post



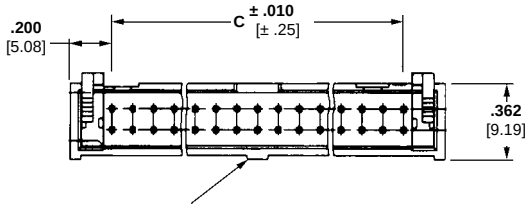

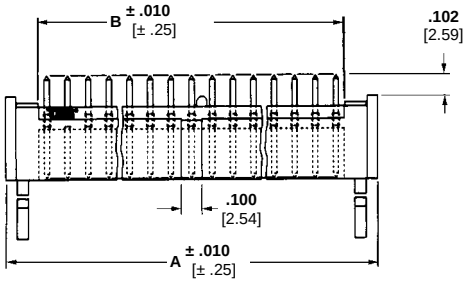

Material and Finish:

Housing—94V-0 rated glass reinforced thermoplastic, blue

Contacts—Phosphor bronze, plated .000030 [0.00076] min. gold over .000050 [0.00127] min. nickel .025 sq. pin w/coined edges

Related Product Data:

Electrical Characteristics—page 4007

Mateable Connectors:
Pages 4008 thru 4010

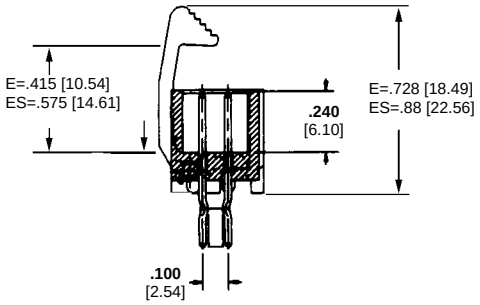

501 - XX XX

# of Positions

Tail Style

***E** (Ejector)*
***ES** Ejector for Strain Relief*

Note: PCB retention version available. Consult Tyco Electronics

No. of Positions	Dimensions A	Dimensions B	Dimensions C	Part Numbers
6	**.600** 15.24	**.280** 7.11	**.200** 5.08	501-0627XX
10	**.800** 20.32	**.480** 12.19	**.400** 10.16	501-1027XX
12	**.900** 22.86	**.580** 14.73	**.500** 12.70	501-1227XX
14	**1.000** 25.40	**.680** 17.27	**.600** 15.24	501-1427XX
16	**1.100** 27.94	**.780** 19.81	**.700** 17.78	501-1627XX
20	**1.300** 33.02	**.980** 24.89	**.900** 22.86	501-2027XX
24	**1.500** 38.10	**1.180** 29.97	**1.100** 27.94	501-2427XX
26	**1.600** 40.64	**1.280** 32.51	**1.200** 30.48	501-2627XX
30	**1.800** 45.72	**1.480** 37.59	**1.400** 35.56	501-3027XX
34	**2.000** 50.80	**1.680** 42.67	**1.600** 40.64	501-3427XX
36	**2.100** 53.34	**1.780** 45.21	**1.700** 43.18	501-3627XX
40	**2.300** 58.42	**1.980** 50.29	**1.900** 48.26	501-4027XX
50	**2.800** 71.12	**2.480** 62.99	**2.400** 60.96	501-5027XX
60	**3.300** 83.82	**2.980** 75.69	**2.900** 73.66	501-6027XX
64	**3.500** 88.90	**3.180** 80.77	**3.100** 78.74	501-6427XX

Note: Before ordering, see Cross Reference in Section 15 for equivalent Tyco Electronics Part Number.

Products for Industrial & Commercial Applications
Dimensions are shown for reference purposes only.
Dimensions are in inches and millimeters unless otherwise specified. Values in brackets are metric equivalents.
Specifications subject to change.
Technical Support Center
1-800-522-6752
www.tycoelectronics.com

Low Profile Headers—Shrouded with Ejection Latches and .150 [3.81] End Dimension, Double Row, .100 x .100 [2.54 x 2.54] Centers

.025 [0.64] Square Straight Post

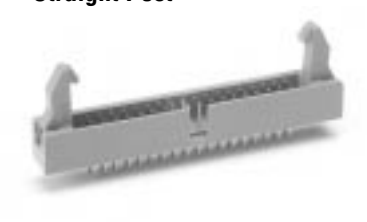

Material and Finish:

Housing—94V-0 rated glass reinforced thermoplastic, blue

Contacts—Phosphor bronze, plated .000030 [0.00076] min. gold over .000050 [0.00127] min. nickel in contact area; tin/lead over nickel in termination area

Related Product Data:

Electrical Characteristics—page 4007

Mateable Connectors:
Pages 4008 thru 4010

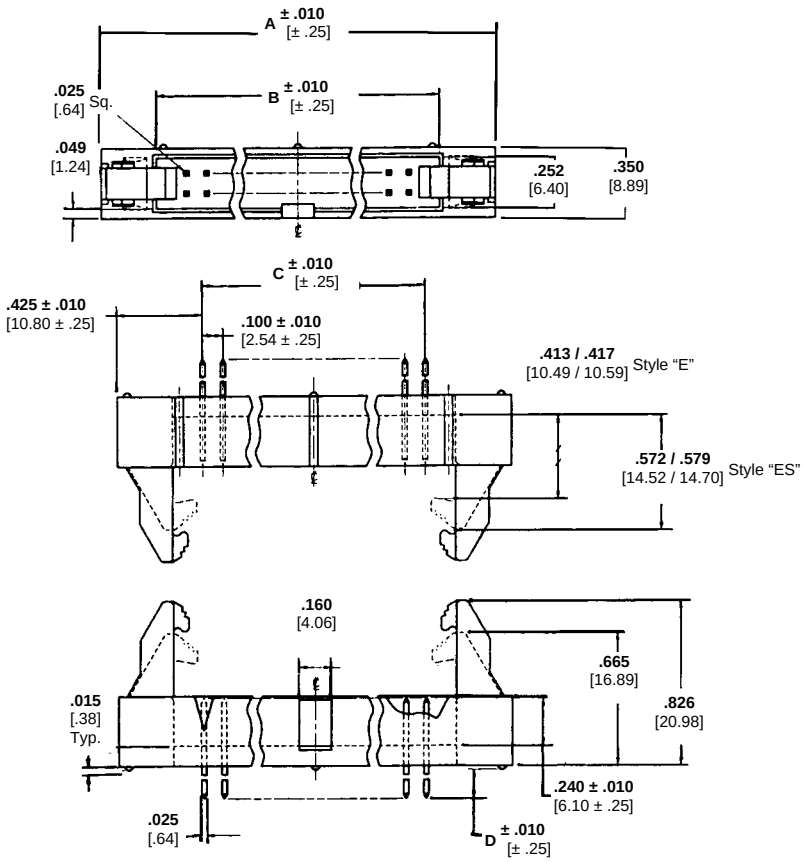

609 - XX XX

# of Positions
Tail Style

***E** (Ejector)*
***ES** Ejector for Strain Relief*

Note: .610 Wire Wrap Post and PCB retention versions available. Consult Tyco Electronics.

No. of Positions	Dimensions A	Dimensions B	Dimensions C	Part Numbers Dimension "D" .102 [2.59] For .062 [1.57] P.C. Boards	Part Numbers Dimension "D" .165 [4.19] For .125 [3.18] P.C. Boards
8	**1.150** 29.21	**.600** 15.24	**.300** 7.26	609-0827XX	609-0837XX
10	**1.250** 31.75	**.700** 17.78	**.400** 10.16	609-1027XX	609-1037XX
14	**1.450** 36.83	**.900** 22.86	**.600** 15.24	609-1427XX	609-1437XX
16	**1.550** 39.37	**1.000** 25.40	**.700** 17.78	609-1627XX	609-1637XX
20	**1.750** 44.45	**1.200** 30.48	**.900** 22.86	609-2027XX	609-2037XX
24	**1.950** 49.53	**1.400** 35.55	**1.100** 27.94	609-2427XX	609-2437XX
26	**2.050** 52.07	**1.500** 38.10	**1.200** 30.48	609-2627XX	609-2637XX
30	**2.250** 57.15	**1.700** 43.18	**1.400** 35.56	609-3027XX	—
34	**2.450** 62.23	**1.900** 48.26	**1.600** 40.64	609-3427XX	609-3437XX
40	**2.750** 69.85	**2.200** 55.88	**1.900** 48.26	609-4027XX	609-4037XX
50	**3.250** 82.55	**2.700** 68.58	**2.400** 60.96	609-5027XX	609-5037XX
60	**3.750** 95.25	**3.200** 81.28	**2.900** 73.66	609-6027XX	—
64	**3.950** 100.33	**3.400** 86.36	**3.100** 78.74	609-6427XX	609-6437XX

Note: Before ordering, see Cross Reference in Section 15 for equivalent Tyco Electronics Part Number.

Products for Industrial & Commercial Applications
Dimensions are shown for reference purposes only.
Dimensions are in inches and millimeters unless otherwise specified. Values in brackets are metric equivalents.
Specifications subject to change.
Technical Support Center
1-800-522-6752
www.tycoelectronics.com

Low Profile Headers — Shrouded High Temperature Housings, with .150 [3.81] End Dimension Double Row, .100 x .100 [2.54 x 2.54] Centers

.025 [0.64] Square Right-Angle Post (with Board Retention Feature)

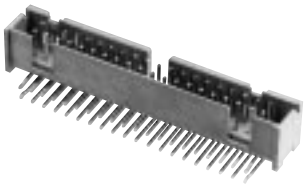

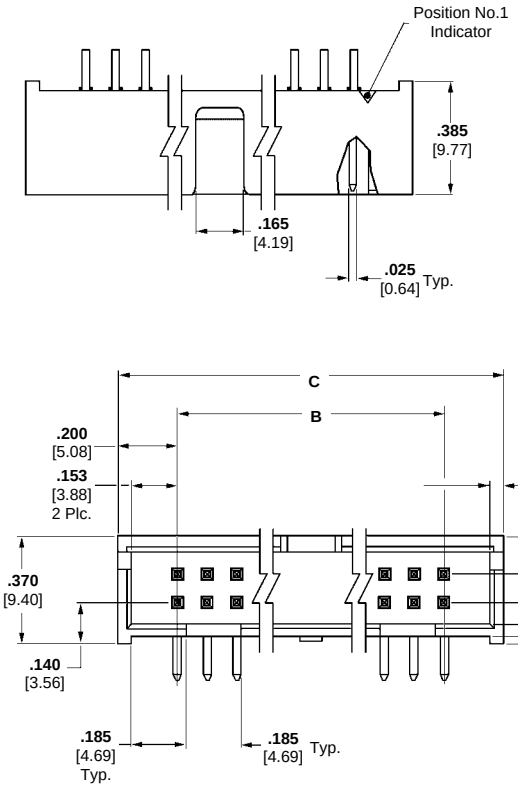

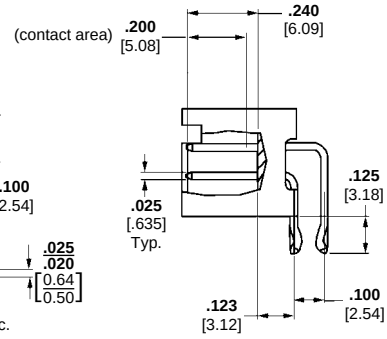

Material and Finish:

Housing—Grey thermoplastic, 94V-0 rated, flame retardant, high temperature compatible

Contacts—Copper alloy, duplex plated

Plating Specifications:

Duplex[1] — .000015 [0.00038] gold on contact area, .000100-.000200 [0.00254-0.00508] tin-lead on solder area, with entire post underplated .000050 [0.00127] nickel

Related Product Data:

Electrical Characteristics—page 4007

Mateable Connectors:
Pages 4008 thru 4010

Accessories:

Snap-In Polarizer — page 4032

No. of Positions	Dimensions B	Dimensions C	Post Plating	Part Numbers
10	**.400** 10.16	**.800** 20.32	Duplex[1]	104340-1
			Duplex[2]	104341-1
14	**.600** 15.24	**1.000** 25.40	Duplex[1]	104340-2
			Duplex[2]	104341-2
20	**.900** 22.86	**1.300** 33.02	Duplex[1]	104340-4
			Duplex[2]	104341-4
24	**1.100** 27.94	**1.400** 35.56	Duplex[2]	104341-5
26	**1.200** 30.48	**1.600** 40.64	Duplex[2]	104341-6
34	**1.600** 40.64	**2.000** 50.80	Duplex[2]	104341-7
40	**1.900** 48.26	**2.300** 58.42	Duplex[1]	104340-8
			Duplex[2]	104341-8
50	**2.400** 60.96	**2.800** 71.12	Duplex[1]	104340-9
			Duplex[2]	104341-9

Products for Industrial & Commercial Applications
Dimensions are shown for reference purposes only.
Dimensions are in inches and millimeters unless otherwise specified. Values in brackets are metric equivalents.
Specifications subject to change.
Technical Support Center
1-800-522-6752
www.tycoelectronics.com

Low Profile Headers — Shrouded High Temperature Housings, with .150 [3.18] End Dimension Double Row, .100 x .100 [2.54 x 2.54] Centers

.025 [.0.64] Square Straight Post (with Board Retention Feature)

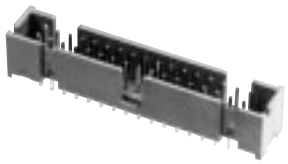

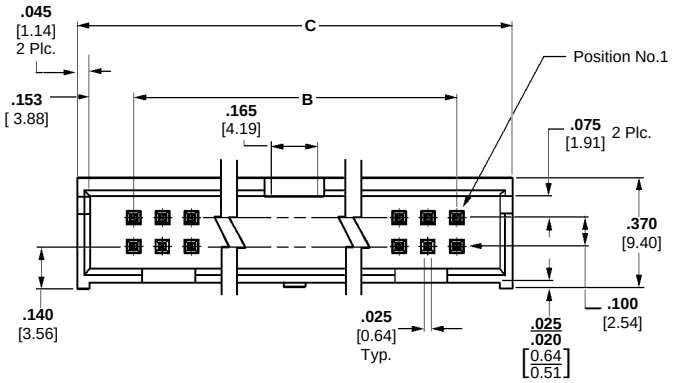

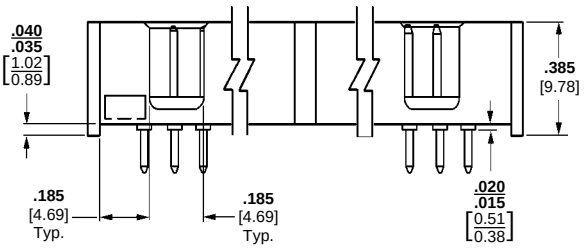

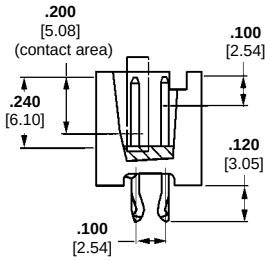

Material and Finish:

Housing—Grey thermoplastic, 94V-0 rated, flame retardant, high temperature compatible

Contacts—Copper alloy, duplex plated

Plating Specifications:

Duplex[1] — .000015 [0.00038] gold on contact area, .000100-.000200 [0.00254-0.00508] tin-lead on solder area, with entire post underplated .000050 [0.00127] nickel

Related Product Data:

Electrical Characteristics—page 4007

Mateable Connectors:
Pages 4008 thru 4010

Accessories:

Snap-In Polarizer — page 4032

No. of Positions	Dimensions B	Dimensions C	Post Plating	Part Numbers
10	**.400** 10.16	**.800** 20.32	Duplex[1]	104338-1
			Duplex[2]	104339-1
14	**.600** 15.24	**1.000** 25.40	Duplex[1]	104338-2
			Duplex[2]	104339-2
16	**.700** 17.78	**1.100** 27.94	Duplex[1]	104338-3
			Duplex[2]	104339-3
20	**.900** 22.86	**1.300** 33.02	Duplex[1]	104338-4
			Duplex[2]	104339-4
24	**1.100** 27.94	**1.400** 35.56	Duplex[1]	104338-5
			Duplex[2]	104339-5
26	**1.200** 30.48	**1.600** 40.64	Duplex[1]	104338-6
			Duplex[2]	104339-6
34	**1.600** 40.64	**2.000** 50.80	Duplex[1]	104338-7
			Duplex[2]	104339-7
40	**1.900** 48.26	**2.300** 58.42	Duplex[1]	104338-8
			Duplex[2]	104339-8
50	**2.400** 60.96	**2.800** 71.12	Duplex[1]	104338-9
			Duplex[2]	104339-9
60	**2.900** 73.66	**3.300** 83.82	Duplex[1]	1-104338-0
			Duplex[2]	1-104339-0

Products for Industrial & Commercial Applications
Dimensions are shown for reference purposes only.
Dimensions are in inches and millimeters unless otherwise specified. Values in brackets are metric equivalents.
Specifications subject to change.
Technical Support Center
1-800-522-6752
www.tycoelectronics.com

Universal Ejection Style Pin Headers, Military, Center and Dual Polarized .100 x .100 [2.54 x 2.54] Centers

Straight-Thru, 4-Sided .025 [0.64] Sq. Posts



Pin Header with Latches



Pin Header without Latches

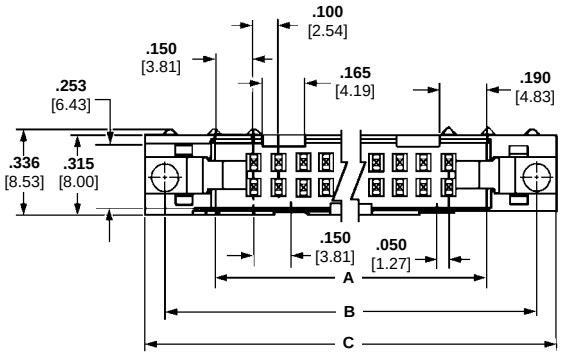

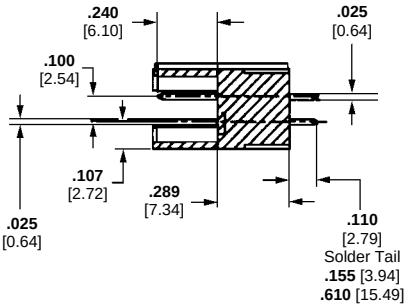

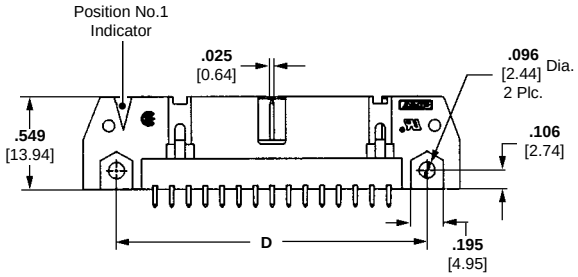

Material and Finish:

Housing & Latches—Black thermoplastic, 94V-0 rated

Contacts—Brass or phosphor bronze (at Tyco Electronics option); tin, gold or duplex plated (See chart, page 4026)

Related Product Data:

Electrical Characteristics—page 4007

Mateable Connectors:
Pages 4008 thru 4010

Accessories:

Snap-In Polarizer—page 4032

Technical Documents:

Product Specifications
108-40018 Pin Headers
108-40019 Pin Headers with ACTION PIN Contacts
108-40004 Ribbon Cable, PVC Insulated, AMP

No. of Positions	Dimensions					
	A	B	C	D	E	F
10	**.700** 17.78	**1.100** 27.94	**1.260** 32.00	**.860** 21.84	**1.100** 27.94	**.400** 10.16
14	**.900** 22.86	**1.300** 33.02	**1.460** 37.08	**1.060** 26.92	**1.300** 33.02	**.600** 15.24
16	**1.000** 25.40	**1.400** 35.56	**1.560** 39.62	**1.180** 29.46	**1.400** 35.56	**.700** 17.78
20	**1.200** 30.48	**1.600** 40.64	**1.760** 44.70	**1.360** 34.54	**1.800** 40.64	**.900** 22.86
24	**1.400** 35.56	**1.800** 45.72	**1.960** 49.78	**1.560** 39.62	**1.800** 45.72	**1.100** 27.94
26	**1.500** 38.10	**1.900** 48.26	**2.060** 52.32	**1.660** 42.16	**1.900** 48.26	**1.200** 30.48
34	**1.900** 48.26	**2.300** 58.42	**2.460** 62.48	**2.060** 52.32	**2.300** 58.42	**1.600** 40.64
40	**2.200** 55.88	**2.600** 66.04	**2.760** 70.10	**2.360** 59.94	**2.600** 66.04	**1.900** 48.26
50	**2.700** 68.58	**3.100** 78.74	**3.260** 82.80	**2.860** 72.64	**3.100** 78.74	**2.400** 60.98
60	**3.200** 81.28	**3.600** 91.44	**3.760** 95.50	**3.360** 85.34	**3.600** 91.44	**2.900** 73.66
64	**3.400** 86.36	**3.800** 96.52	**3.960** 100.58	**3.560** 90.42	**3.800** 96.52	**3.100** 78.74

Notes: 1. Pin headers in 10- and 14-position sizes have only one slot for snap-in polarizer (military polarization), located as shown.
2. Pin headers in 10-position size have only slot for dual polarization, located as shown.
3. For information regarding latch/pin header applications and for ordering latches separately, refer to page 4031.

Products for Industrial & Commercial Applications
Dimensions are shown for reference purposes only.
Dimensions are in inches and millimeters unless otherwise specified. Values in brackets are metric equivalents.
Specifications subject to change.
Technical Support Center
1-800-522-6752
www.tycoelectronics.com

Universal Ejection Style Pin Headers, Military, Center and Dual Polarized .100 x .100 [2.54 x 2.54] Centers

Ordering Information

When ordering a pin header or pin header kit, use the chart at the right to determine the six-digit base number for the desired post length, contact plating and latch configuration (Kits only). Then, complete the part number or kit number by adding the proper prefix and/or suffix numbers for the desired pin header size. The prefix/suffix numbers for all available sizes (10 thru 64 positions) are listed below.

No. of Positions	Add to Part Numbers	
	Prefix	Suffix
10		-1
14		-2
16		-3
20		-4
24		-5
26		-6
34		-8
40		-9
50	1-	-0
60	1-	-1
64	1-	-2

Mounting Information

4-24 self-tapping screws and 2-56 bolts and nuts are available for mounting straight-thru pin headers of pc boards. Typical applications and part nos. for ordering this hardware are presented below.

Note: 2-56 bolts and nuts may be used to mount pin headers with and without latches. If latches are to be used, the bolts must be positioned in the pin header before the latches are installed.

Post Length	Contact Plating	Pin Header Part No. (without Latches)	Pin Header Kit No. (with Latches)	
			Latch Part Number 102312-1 Mates with AMP-LATCH Receptacles without Strain Relief	Latch Part Number 102320-1 Mates with AMP-LATCH Receptacles with Strain Relief
.110 2.79	Duplex[1]	102153	499910	499922
	Duplex[2]	102154	499160	499206
.155 3.94	Duplex[1]	102155	—	499923
	Duplex[2]	102156	499374*	102321

[1] .000015 [0.00038] gold on mating end, .000100-.000200 [0.00254-0.00508] bright tin-lead on termination end, with entire contact underplated .000050 [0.00127] nickel.
[2] .000030 [0.00076] gold on mating end, .000100-.000200 [0.00254-0.00508] bright tin-lead on termination end, with entire contact underplated .000050 [0.00127] nickel.
Note: For information regarding latch/pin header applications and for ordering latches separately, refer to page 4031.
* Not available in 64 position.

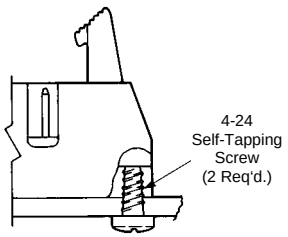

Pin Header Mounting using 4-24 Self-Tapping Screws:
Part Numbers 19156-1 **(for .062 [1.57] Thick PC Board)**
19156-2 **(for .093 [2.36] Thick PC Board)**
19156-3 **(for .125 [3.18] Thick PC Board)**

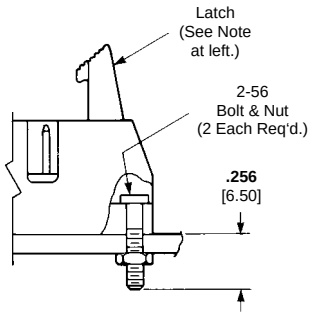

Pin Header Mounting with 2-56 Bolts and Nuts:
Part Number 746383-1 **(Bolt Only)**
Kit No. 102198-1 **(Bolt and Nut, 2 Each per Kit)**

Products for Industrial & Commercial Applications
Dimensions are shown for reference purposes only.
Dimensions are in inches and millimeters unless otherwise specified. Values in brackets are metric equivalents.
Specifications subject to change.
Technical Support Center
1-800-522-6752
www.tycoelectronics.com

Universal Ejection Style Pin Headers with ACTION PIN Contacts, Military, Center and Dual Polarized .100 x .100 [2.54 x 2.54] Centers

Straight-Thru, 4-Sided .025 [0.64] Sq. Posts



Pin Header without Latches

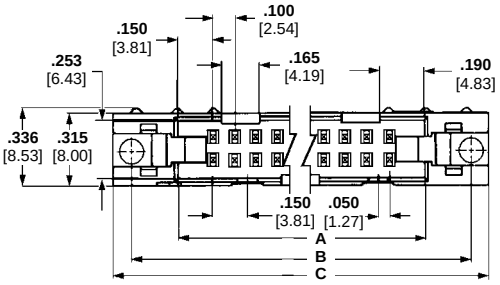

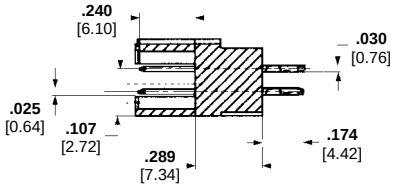

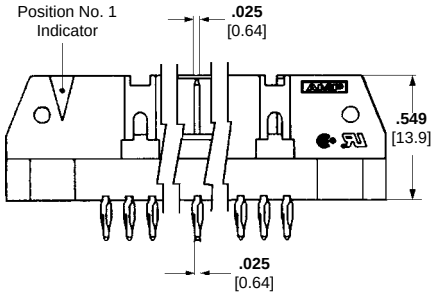

Material and Finish:

Housing—Black thermoplastic, 94V-0 rated

Contacts—Copper alloy; duplex plated

Related Product Data:

Electrical Characteristics—page 4007

Mateable Connectors:
Pages 4008 thru 4010

Accessories:

Snap-In Polarizer—page 4032

Technical Documents:

Product Specifications
108-40018 Pin Headers
108-40019 Pin Headers with ACTION PIN Contacts
108-40004 Ribbon Cable, PVC Insulated

Ordering Information

When ordering a pin header, use the chart at the right to determine the six-digit base no. for the desired post length, and contact plating. Then, complete the part no. by adding the proper prefix and/or suffix no. for the desired pin header size. The prefix/suffix nos. for all available sizes (10 thru 64 positions) are listed below.

Mounting Information

No mounting hardware is supplied by Tyco Electronics.

No. of Positions	Dimensions				
	A	B	C	D	E
10	**.700** 17.78	**1.100** 27.94	**1.260** 32.00	**1.100** 27.94	**.400** 10.16
14	**.900** 22.86	**1.300** 33.02	**1.460** 37.08	**1.300** 33.02	**.600** 15.24
16	**1.000** 25.40	**1.400** 35.56	**1.560** 39.62	**1.400** 35.56	**.700** 17.78
20	**1.200** 30.48	**1.600** 40.64	**1.760** 44.70	**1.600** 40.64	**.900** 22.86
24	**1.400** 35.56	**1.800** 45.72	**1.960** 49.78	**1.800** 45.72	**1.100** 27.94
26	**1.500** 38.10	**1.900** 48.26	**2.060** 52.32	**1.900** 48.26	**1.200** 30.48
34	**1.900** 48.26	**2.300** 58.42	**2.460** 62.48	**2.300** 58.42	**1.600** 40.64
40	**2.200** 55.88	**2.600** 66.04	**2.760** 70.10	**2.600** 66.04	**1.900** 48.26
50	**2.700** 68.58	**3.100** 78.74	**3.260** 82.80	**3.100** 78.74	**2.400** 60.96
60	**3.200** 81.28	**3.600** 91.44	**3.760** 95.50	**3.600** 91.44	**2.900** 73.66
64	**3.400** 86.36	**3.800** 96.52	**3.960** 100.58	**3.800** 96.52	**3.100** 78.74

Notes: 1. Pin headers in 10- and 14-position sizes have only one slot for snap-in polarizer (military polarization), located as shown.
2. Pin headers in 10-position size have only slot for dual polarization, located as shown.
3. For information regarding latch/pin header applications and for ordering latches separately, refer to page 4031.

ACTION PIN Contact Insertion/Extraction Tool Part Number 91241-1 (includes Insertion/Extraction Tip Part Number 126961-1 and Extraction Tip Part Number 126961-2

No. of Positions	Add to Part Numbers	
	Prefix	Suffix
10		-1
14		-2
16		-3
20		-4
24		-5
26		-6
30		-7
34		-8
40		-9
50	1-	-0
60	1-	-1
64	1-	-2

Post Length	Contact Plating	Pin Header Part Number For .093-.125 [2.36-3.18] Thick PC Board
.174 4.42	Duplex[1]	499582

[1] .000030 [0.00076] gold on mating end, .000100-.000200 [0.00254-0.00508] bright tin-lead on termination end, with entire contact underplated .000050 [0.00127] nickel.

Note: For information regarding latch/pin header applications and for ordering latches separately, refer to page 4031.

Products for Industrial & Commercial Applications

Dimensions are shown for reference purposes only.

Dimensions are in inches and millimeters unless otherwise specified. Values in brackets are metric equivalents.

Specifications subject to change.

Technical Support Center
1-800-522-6752
www.tycoelectronics.com

Universal Ejection Style Pin Headers, Military, Center and Dual Polarized .100 x .100 [2.54 x 2.54] Centers

Right-Angle, 4-Sided .025 [0.64] Sq. Posts



Pin Header with Latches



Pin Header without Latches

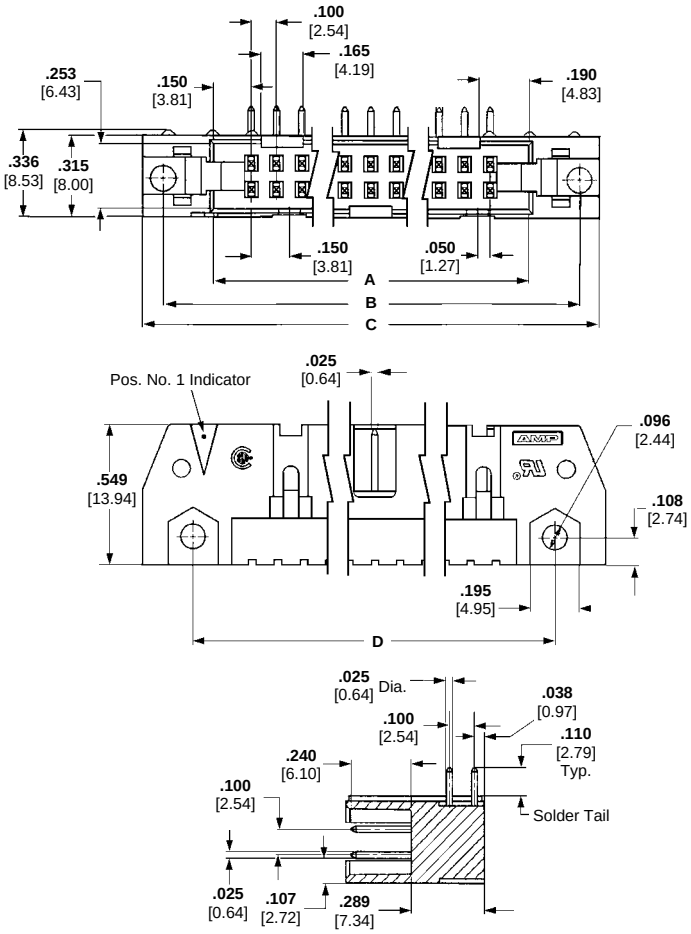

Material and Finish:

Housing & Latches—Black thermoplastic, 94V-0 rated

Contacts—Phosphor bronze; duplex plated (See chart page 4029)

Related Product Data:

Electrical Characteristics—page 4007

Mateable Connectors:
Pages 4008 thru 4010

Accessories:

Snap-In Polarizer—page 4032

Technical Documents:

Product Specifications
108-40018 Pin Headers
108-40019 Pin Headers with ACTION PIN Contacts
108-40004 Ribbon Cable, PVC Insulated

No. of Positions	Dimensions					
	A	B	C	D	E	F
10	**.700** 17.78	**1.100** 27.94	**1.260** 32.00	**.860** 21.84	**.860** 21.84	**.400** 10.16
14	**.900** 22.86	**1.300** 33.02	**1.460** 37.08	**1.060** 26.92	**1.060** 26.92	**.600** 15.24
16	**1.000** 25.40	**1.400** 35.56	**1.560** 39.62	**1.180** 29.46	**1.180** 29.46	**.700** 17.78
20	**1.200** 30.48	**1.600** 40.64	**1.760** 44.70	**1.380** 34.54	**1.380** 34.54	**.900** 22.86
24	**1.400** 35.56	**1.800** 45.72	**1.960** 49.78	**1.560** 39.62	**1.560** 39.62	**1.100** 27.94
26	**1.500** 38.10	**1.900** 48.26	**2.060** 52.32	**1.660** 42.16	**1.660** 42.16	**1.200** 30.48
34	**1.900** 48.26	**2.300** 58.42	**2.460** 62.48	**2.060** 52.32	**2.060** 52.32	**1.600** 40.64
40	**2.200** 55.88	**2.600** 66.04	**2.760** 70.10	**2.360** 59.94	**2.360** 59.94	**1.900** 48.26
50	**2.700** 68.58	**3.100** 78.74	**3.260** 82.80	**2.860** 72.64	**2.860** 72.64	**2.400** 60.98
60	**3.200** 81.28	**3.600** 91.44	**3.760** 95.50	**3.360** 85.34	**3.360** 85.34	**2.900** 73.66
64	**3.400** 86.36	**3.800** 96.52	**3.960** 100.58	**3.560** 90.42	**3.560** 90.42	**3.100** 78.74

Notes: 1. Pin headers in 10- and 14-position sizes have only one slot for snap-in polarizer (military polarization), located as shown.
2. Pin headers in 10-position size have only slot for dual polarization, located as shown.

Products for Industrial & Commercial Applications

Dimensions are shown for reference purposes only.

Dimensions are in inches and millimeters unless otherwise specified. Values in brackets are metric equivalents.

Specifications subject to change.

Technical Support Center
1-800-522-6752
www.tycoelectronics.com

Universal Ejection Style Pin Headers, Military, Center and Dual Polarized .100 x .100 [2.54 x 2.54] Centers

Ordering Information

When ordering a pin header or pin header kit, use the chart at the right to determine the six-digit base no. for the desired post length, contact plating and latch configuration (Kits only). Then, complete the part no. or kit no. by adding the proper prefix and/or suffix no. for the desired pin header size. The prefix/suffix nos. for all available sizes (10 thru 64 positions) are listed below.

No. of Positions	Add to Part Numbers	
	Prefix	Suffix
10		-1
14		-2
16		-3
20		-4
24		-5
26		-6
34		-8
40		-9
50	1-	-0
60	1-	-1
64	1-	-2

Mounting Information

No mounting hardware is supplied by Tyco Electronics.

Post Length	Contact Plating	Pin Header Part Numbers (without Latches)	Pin Header Kit No. (with Latches)	
			Latch Part Number 102312-1 Mates with AMP-LATCH Receptacles without Strain Relief	Latch Part Number 102320-1 Mates with AMP-LATCH Receptacles with Strain Relief
.110 2.79	Duplex[1]	102159	499913	499786
	Duplex[2]	102160	499345	499141
.155 3.94	Duplex[1]	102161	—	—
	Duplex[2]	102162	—	102322*

[1] .000015 [0.00038] gold on mating end, .000100-.000200 [0.00254-0.00508] bright tin-lead on termination end, with entire contact underplated .000050 [0.00127] nickel.
[2] .000030 [0.00076] gold on mating end, .000100-.000200 [0.00254-0.00508] bright tin-lead on termination end, with entire contact underplated .000050 [0.00127] nickel.
Note: For information regarding latch/pin header applications and for ordering latches separately, refer to page 4031.
* Not available in 24 position

Products for Industrial & Commercial Applications
Dimensions are shown for reference purposes only.
Dimensions are in inches and millimeters unless otherwise specified. Values in brackets are metric equivalents.
Specifications subject to change.
Technical Support Center
1-800-522-6752
www.tycoelectronics.com

High Temperature, Thru-Hole (SMT Compatible) Universal Ejection Style Pin Header .100 x .100 [2.54 x 2.54], .025 [0.64] Sq. Posts



Straight-Thru—4-Sided



Right-Angle—4-Sided

Material and Finish:

Housing—Red thermoplastic, 94V-0 rated

Contacts—Phosphor bronze or brass (at Tyco Electronics option), duplex plated .000030 [0.00076] gold on mating end, .000150 [0.0038] min. matte tin-lead on solder tail, with entire contact underplated .000050 [0.00127] nickel

Related Product Data:

Electrical Characteristics—page 4007

Mateable Connectors:
Pages 4008 thru 4010

Accessories:

Snap-In Polarizer—page 4032

Technical Documents:

Product Specifications
108-40018 Pin Headers
108-40004 Ribbon Cable, PVC Insulated

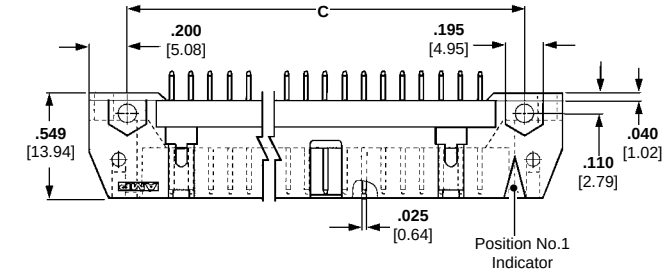

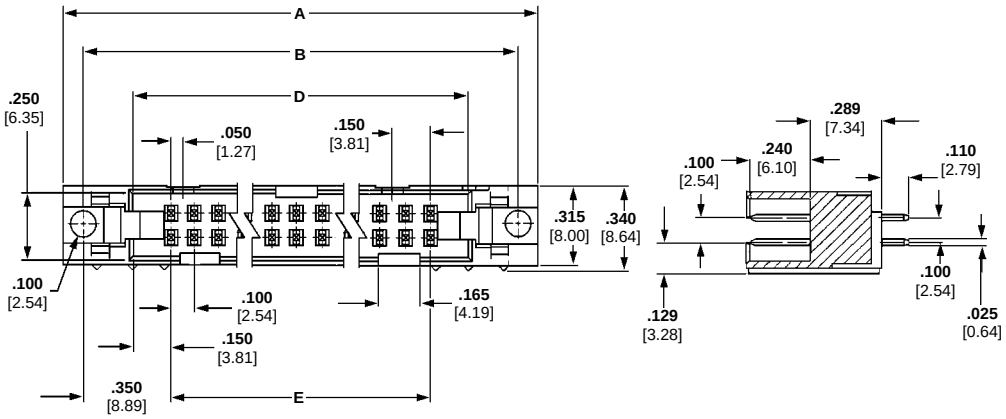

Straight-Thru—4-Sided

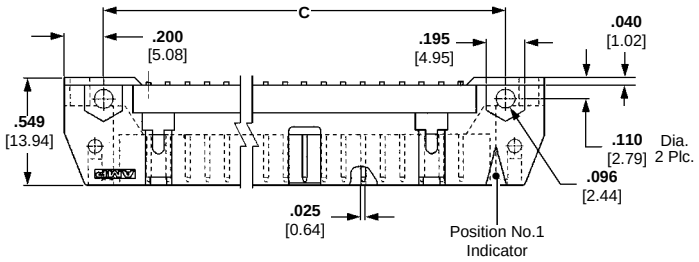

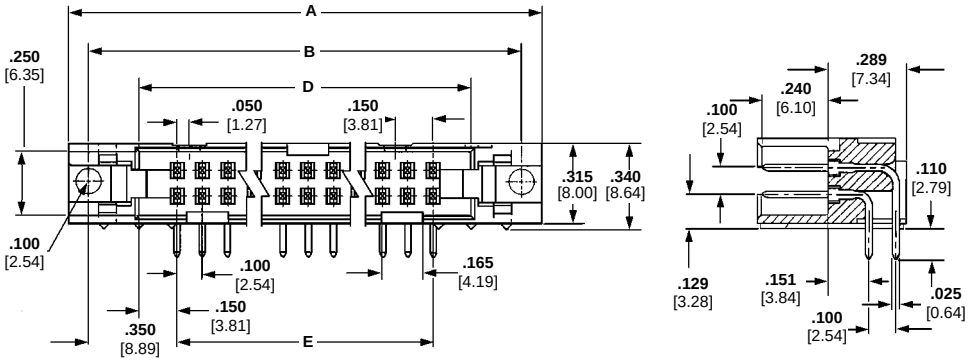

Right-Angle—4-Sided

Products for Industrial & Commercial Applications
Dimensions are shown for reference purposes only.
Dimensions are in inches and millimeters unless otherwise specified. Values in brackets are metric equivalents.
Specifications subject to change.
Technical Support Center
1-800-522-6752
www.tycoelectronics.com

High Temperature, Thru-Hole (SMT Compatible) Universal Ejection Style Pin Header .100 x .100 [2.54 x 2.54], .025 [0.64] Sq. Posts

No. of Positions	Dimensions					Part Numbers	
	A	B	C	D	E	Straight-Thru	Right-Angle
10	**1.260** 32.00	**1.100** 27.94	**.860** 21.84	**.700** 17.78	**.400** 10.16	111008-1	111105-1
14	**1.460** 37.08	**1.300** 33.02	**1.060** 26.92	**.900** 22.86	**.600** 15.24	111008-2	111105-2
16	**1.560** 39.62	**1.400** 35.56	**1.160** 29.46	**1.000** 25.40	**.700** 17.78	111008-3	111105-3
20	**1.760** 44.70	**1.600** 40.64	**1.360** 34.54	**1.200** 30.48	**.900** 22.86	111008-4	111105-4
24	**1.960** 49.78	**1.800** 40.64	**1.560** 39.62	**1.400** 35.56	**1.100** 27.94	111008-5	111105-5
26	**2.060** 52.32	**1.900** 48.26	**1.660** 42.16	**1.500** 38.10	**1.200** 30.48	111008-6	111105-6
34	**2.460** 62.48	**2.300** 58.42	**2.060** 52.32	**1.900** 48.26	**1.600** 40.64	111008-8	111105-8
40	**2.760** 70.10	**2.600** 66.04	**2.360** 59.94	**2.200** 55.88	**1.900** 48.26	111008-9	111105-9
50	**3.260** 82.80	**3.100** 78.74	**2.860** 72.64	**2.700** 68.58	**2.400** 60.98	1-111008-0	1-111105-0
60	**3.760** 95.50	**3.600** 91.44	**3.360** 85.34	**3.200** 81.28	**2.900** 73.66	1-111008-1	1-111105-1
64	**3.960** 100.58	**3.800** 96.52	**3.560** 90.42	**3.400** 86.36	**3.100** 78.74	1-111008-2	1-111105-2

Notes: 1. 10- and 14-position pinless headers have only one slot for snap-in polarizer (military polarization).
2. 10-position pinless headers have only one slot for dual polarization.

Latches for Ejection Style Pin Headers

Material:
Red thermoplastic, 94V-0 Rated

Latch Part Number 111338-1
(see illustration below.)

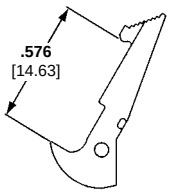

Latch Part Number 111293-1
(see illustration below.)

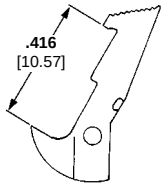

Material:
Black thermoplastic, 94V-0 Rated

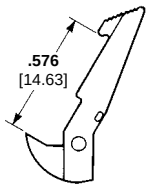

Latch Part Number 102320-1
(see illustration below.)

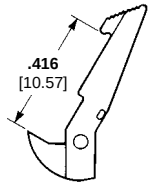

Latch Part Number 102312-1
(see illustration below.)

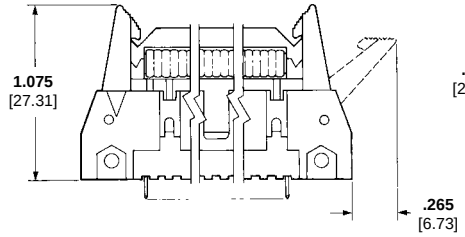

Use Latch Part Number 102320-1 **or** 111338-1 **for AMP Receptacles with Strain Relief.**

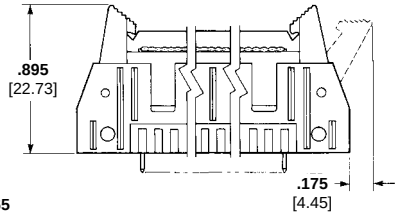

Use Latch Part Number 102312-1 **or** 111293-1 **for AMP Receptacles without Strain Relief.**

Pin Header Accessories

Polarizer, Snap-In (for Pin Connectors, Universal Pin Headers and Low Profile Pin Headers)

Part Numbers
499991-2 (packaged 50 per bag)
499991-3 (packaged 1000 per box)

Material:

Black thermoplastic, 94V-0 rated

Related Product Data:

Universal Pin Headers — pages 4025 thru 4031

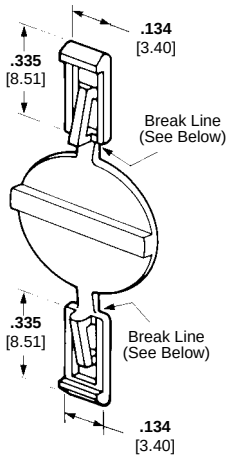

The snap-in polarizer provides military polarization for pin connectors (without detent windows), Universal pin headers and Low Profile pin headers. Installation of the polarizer is as follows:

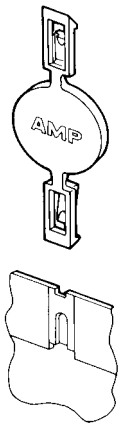

Orient the polarizer so that the polarizer latch is on the same side as the inner wall (post side) of the connector/ header housing.

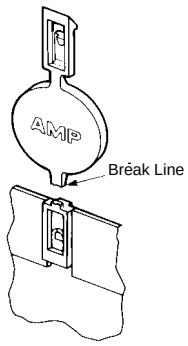

Slide the polarizer over the polarizing slot of the housing until the latch engages the hole. Snap off the tab at the break line next to the housing. Using the remaining polarizer, repeat the process for the other housing location.

Products for Industrial & Commercial Applications
Dimensions are shown for reference purposes only.
Dimensions are in inches and millimeters unless otherwise specified. Values in brackets are metric equivalents.
Specifications subject to change.
Technical Support Center
1-800-522-6752
www.tycoelectronics.com

.050 x .100 [1.27 x 2.54] Centerline Flexible Flat Conductor (FFC) Cable Connectors

Product Facts

- **Signal application only 1.5 amperes maximum signal circuit**
- **Single or double row connectors**
- **Mass termination**
- **Terminates flexible flat conductor (FFC) cable and flexible etched circuitry (FEC)**
- **Shielded cable provides for customizing**
- **Center latch housing providing positive latching**

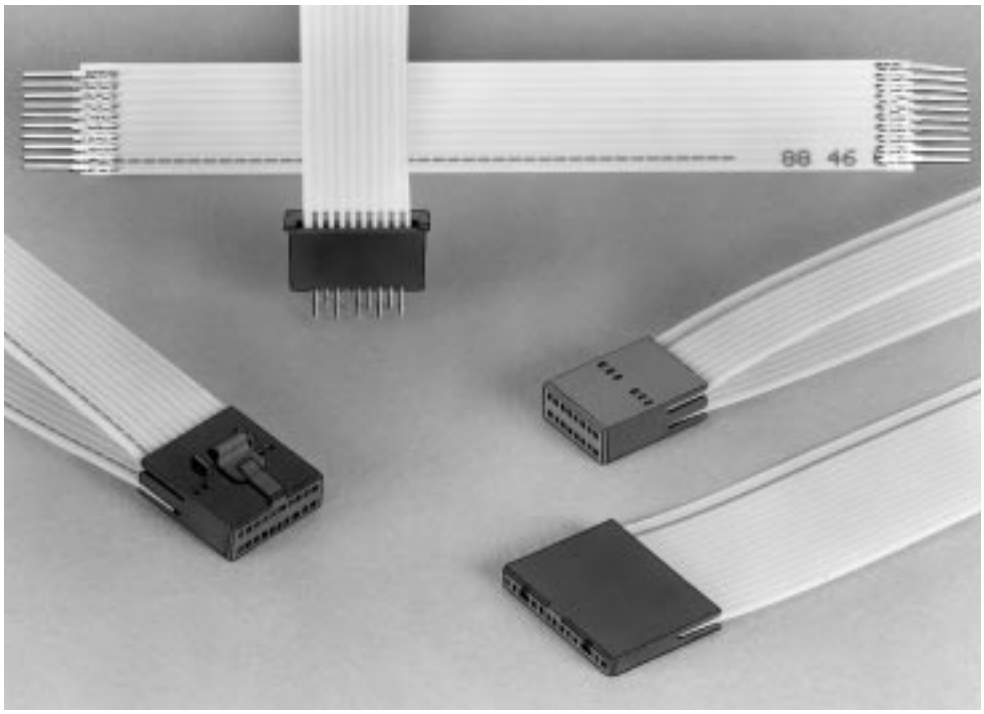

The cable-to-board .050 [1.27] center FFC receptacle connectors are part of the AMPMODU System 50 family for terminating flexible flat conductor cable and flexible etched circuitry.

The FFC receptacle uses a dual beam contact with 30 microinches of gold plating. The FFC receptacle connectors have an integral latch for positive locking to shrouded mating headers.

Flexible flat conductor cable is a planar parallel conductor cable. It can be used as a one-to-one connector or as a complex harness, allowing split-outs and special routing. The cable is comprised of .026 [0.66] wide x .003 [0.08] thick conductors made of copper per QQ-C-502 and insulated with a flame retardant polyester film.

The FFC contacts are available in receptacle and solder tab. Receptacle contacts are made of phosphor bronze with a finish of plated gold duplex, while the solder tab contacts are finished in a bright tin-lead overall.

The complete product line provides solder tabs for board mounting at low cost and custom shielding of the cable.

FFC Contacts, .050 x .100 [1.27 x 2.54] Centerline



Receptacle Strip



Solder Tab Strip

Material and Finish:

Phosphor bronze; plated gold duplex or bright tin-lead overall (See chart.)

Related Product Data:

Housings—pages 4035 thru 4038
Application Tooling— page 4059

Technical Documents:

Product Specification
108-16022
Application Specification
114-16008

Receptacle

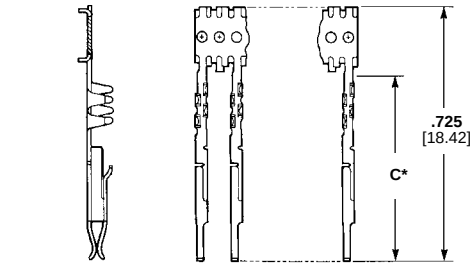

Accepts .015 [0.38] Sq. Post
.125-.350 [3.18-8.89] Long

Solder Tab

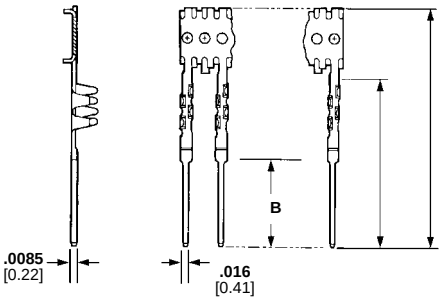

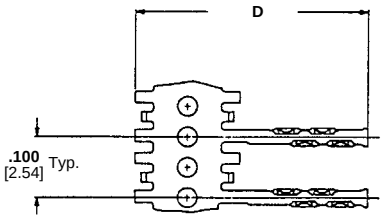

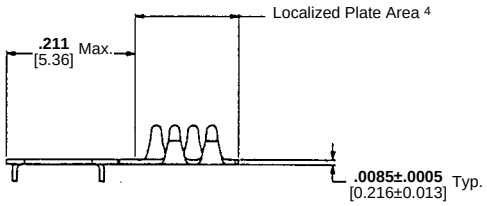

Contacts						Application Tooling Part Numbers	
Type	Configuration	Part Numbers/ Finish	Dimensions B	Dimensions C*	Dimensions D	Machine	Machine With Programmer
Receptacle	Strip	487547-1[1]	—	**.520** 13.21	**.725** 18.42		
Solder Tab	Strip	487923-1[2]	**.245** 6.22	**.480** 12.19	**.685** 17.40		
	Strip	487923-3[3]	**.245** 6.22	**.480** 12.19	**.685** 17.40	224910-4 (120 V) 224910-6 (240 V)	318619-4 (120 V) 318619-6(240 V)
	Strip	487940-3[2]	**.110** 2.79	**.345** 8.76	**.550** 13.97		
Contact Splice	Strip	487941-2[4]	—	—	**.385** 9.78		

[1] Duplex plated .000030 [0.00076] gold on mating area, .000100 [0.00254] min. bright tin-lead in crimp area, with entire contact underplated .000050 [0.00127] min. nickel.
[2] Plated .000100 [0.00254] min. tin-lead over .000050 [0.00127] min. nickel.
[3] Duplex plated .000015 [0.00038] gold on solder tab end, .000100 [0.00254] min. bright tin-lead in crimp area, with entire contact underplated .000050 [0.00127] min. nickel.
[4] Plated .000150 [3.81µm] min. bright tin lead over .000050 [1.27µm] min. nickel.
*After cut-off from carrier strip.

For complete product information, order Catalog 82007

Products for Industrial & Commercial Applications
Dimensions are shown for reference purposes only.
Dimensions are in inches and millimeters unless otherwise specified. Values in brackets are metric equivalents.
Specifications subject to change.
Technical Support Center
1-800-522-6752
www.tycoelectronics.com

Single Row Receptacle Housings, .050 x .100 [1.27 x 2.54] Centerline, Cable-to-Board



Plain Style Housings



Latch Style Housings

Material and Finish:

Housing—Black thermoplastic, flame retardant, 94V-0 rated

Contacts—Phosphor bronze; plated gold duplex

Related Product Data:

Receptacle Contacts—page 4034

Mateable Headers—Section 2, pages 2029, 2030, 2033 (Single Row) and 2034 (Single Row)

Technical Documents:

Product Specification
108-16022

Application Specification
114-16008

Plain Style Housings

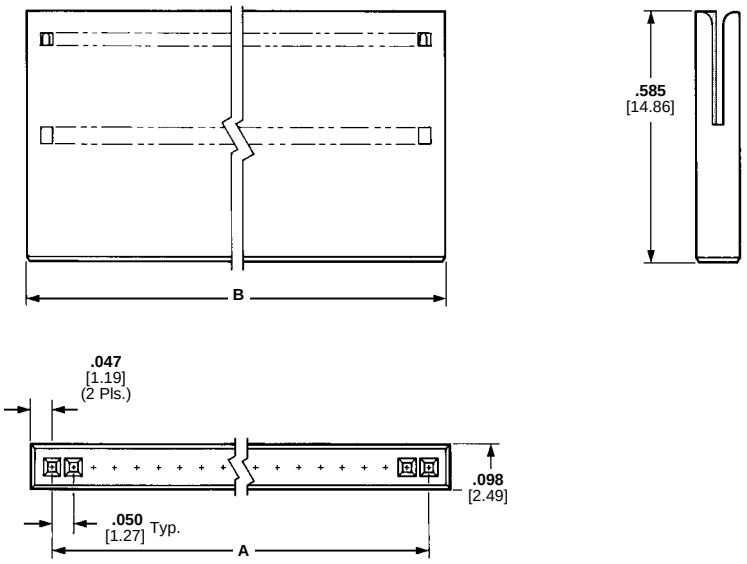

Latch Style Housings

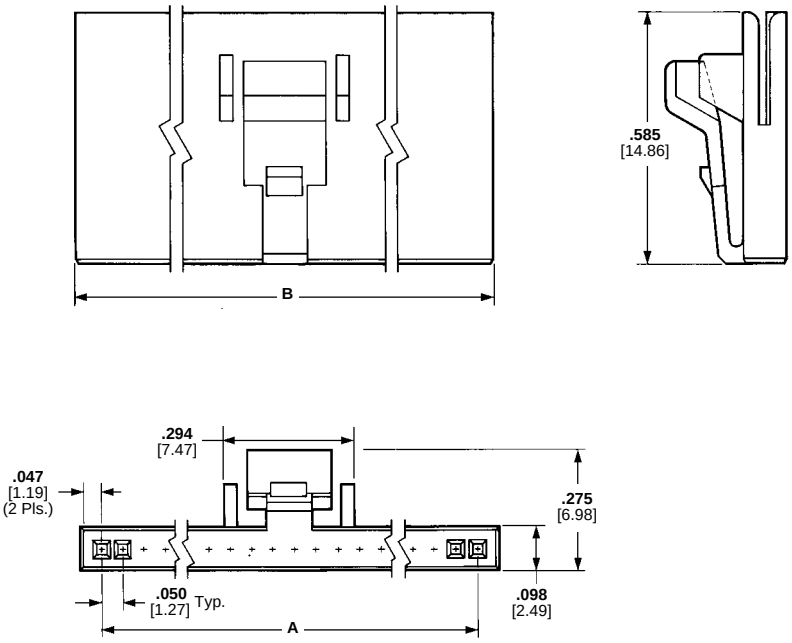

4

Ribbon and Flexible Flat Cable Products

For complete product information, order Catalog 82007

Products for Industrial & Commercial Applications
Dimensions are shown for reference purposes only.
Dimensions are in inches and millimeters unless otherwise specified. Values in brackets are metric equivalents.
Specifications subject to change.
Technical Support Center
1-800-522-6752
www.tycoelectronics.com

Single Row Receptacle Housings, .050 x .100 [1.27 x 2.54] Centerline, Cable-to-Board (Continued)

No. of Positions	Dimensions		Part Numbers	
	A	B	Plain Receptacle Housing	Latch Style Receptacle Housing
4	**.150** 3.18	**.244** 6.20	487544-1	487545-1
5	**.200** 5.08	**.294** 7.47	487544-2	487545-2
6	**.250** 6.35	**.344** 8.74	487544-3	487545-3
7	**.300** 7.62	**.394** 10.01	487544-4	487545-4
8	**.350** 8.89	**.444** 11.28	487544-5	487545-5
10	**.450** 11.43	**.544** 13.82	487544-7	487545-7
12	**.550** 13.97	**.644** 16.36	487544-9	487545-9
13	**.600** 15.24	**.694** 17.63	—	1-487545-0
15	**.700** 17.78	**.794** 20.17	1-487544-2	1-487545-2
16	**.750** 19.05	**.844** 21.43	1-487544-3	—
17	**.800** 20.32	**.894** 22.71	1-487544-4	1-487545-4
20	**.950** 24.13	**1.044** 26.52	1-487544-7	1-487545-7
22	**1.050** 26.67	**1.144** 29.06	1-487544-9	1-487545-9
25	**1.200** 30.48	**1.294** 32.87	2-487544-2	2-487545-2
26	**1.250** 31.75	**1.343** 34.11	—	2-487545-3
28	**1.350** 34.29	**1.443** 36.65	—	2-487545-5
30	**1.450** 36.83	**1.544** 39.22	—	2-487545-7
36	**1.750** 44.45	**1.844** 46.84	3-487544-3	3-487545-3
40	**1.950** 49.53	**2.044** 51.92	—	3-487545-7
45	**2.200** 55.88	**2.294** 58.27	—	4-487545-2
50	**2.450** 62.23	**2.544** 64.62	4-487544-7	4-487545-7

Note: Other sizes of receptacle housings (plain and latch style) can be made available, consult Tyco Electronics.

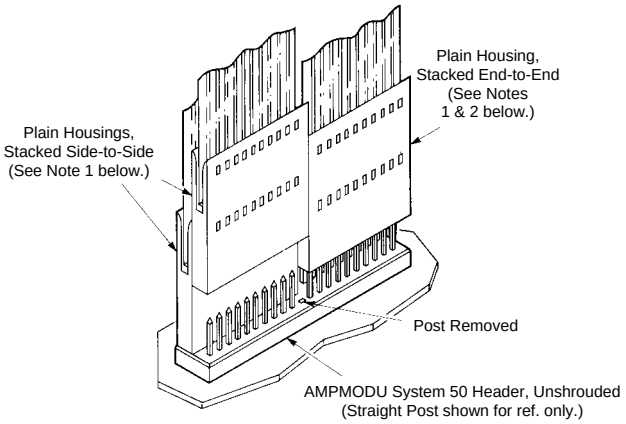

Notes: 1. Plain housings are side-to-side stackable on either straight or right-angle posted, unshrouded AMPMODU System 50 headers.

2. For end-to-end stacking, the posts located between the adjoining housings must be removed to provide housing end clearance.

Typical Cable-to-Board Application of Plain Receptacle Housing

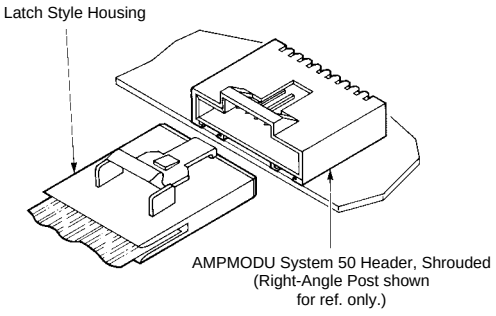

Typical Cable-to-Board Application of Latch Style Receptacle Housing

For complete product information, order Catalog 82007

Products for Industrial & Commercial Applications
Dimensions are shown for reference purposes only.
Dimensions are in inches and millimeters unless otherwise specified. Values in brackets are metric equivalents.
Specifications subject to change.
Technical Support Center
1-800-522-6752
www.tycoelectronics.com

Double Row Receptacle Housings, .050 x .100 [1.27 x 2.54] Centerline, Cable-to-Board



Plain Style Housings



Latch Style Housings

Material:

Black thermoplastic, flame retardant, 94V-0 rated

Related Product Data:

Receptacle Contacts—page 4034
Mateable Headers—Section 2, pages 2031, 2032, 2034 (Double Row) and 2035

Technical Documents:

Product Specification
108-16022
Application Specification
114-16008

Plain Style Housings

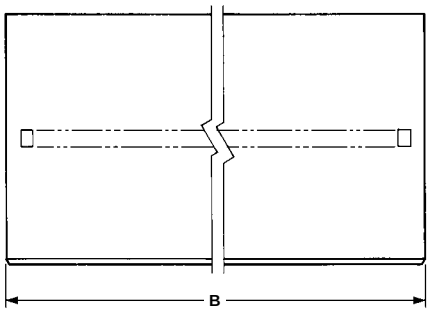

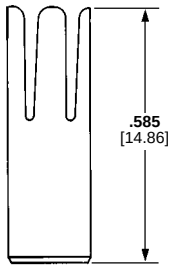

Plain

Latch Style Housings

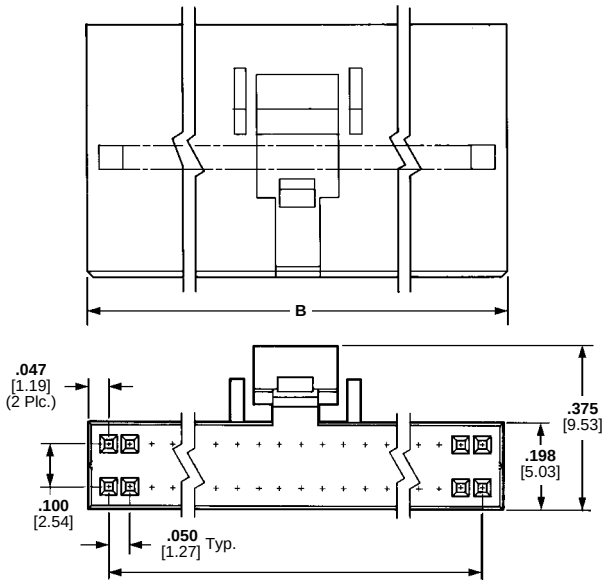

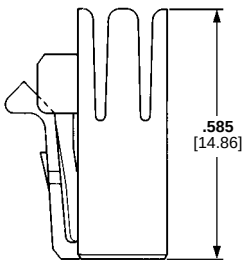

Latch

For complete product information, order Catalog 82007

Products for Industrial & Commercial Applications
Dimensions are shown for reference purposes only.
Dimensions are in inches and millimeters unless otherwise specified. Values in brackets are metric equivalents.
Specifications subject to change.
Technical Support Center
1-800-522-6752
www.tycoelectronics.com

Double Row Receptacle Housings, .050 x .100 [1.27 x 2.54] Centerline, Cable-to-Board (Continued)

No. of Positions	Dimensions		Part Numbers	
	A	B	Plain Housing	Latch Style Housing
8	**.150** 3.81	**.247** 6.27	487938-8	487937-8
10	**.200** 5.08	**.297** 7.54	1-487938-0	1-487937-0
12	**.250** 6.35	**.374** 8.81	1-487938-2	1-487937-2
14	**.300** 7.62	**.397** 10.08	1-487938-4	1-487937-4
16	**.350** .889	**.447** 11.35	1-487938-6	1-487937-6
20	**.450** 11.43	**.547** 13.89	2-487938-0	2-487937-0
24	**.550** 13.97	**.647** 16.43	2-487938-4	2-487937-4
26	**.600** 15.24	**.697** 17.7	2-487938-6	2-487937-6
30	**.700** 17.78	**.797** 20.24	3-487938-0	3-487937-0
34	**.800** 20.32	**.897** 22.78	3-487938-4	3-487937-4
40	**.950** 24.13	**1.047** 26.59	4-487938-0	4-487937-0
44	**1.050** 26.67	**1.147** 29.13	4-487938-4	4-487937-4
50	**1.200** 30.48	**1.297** 39.94	5-487938-0	5-487937-0
60	**1.450** 36.83	**1.547** 39.29	6-487938-0	6-487937-0
72	**1.750** 44.45	**1.847** 46.91	7-487938-2	7-487937-2
80	**1.950** 49.53	**2.047** 51.99	8-487938-0	8-487937-0
100	**2.450** 62.23	**2.547** 64.69	487938-1	487937-1

Note: Other sizes of receptacle housings, up to 120 positions, can be made available, consult Tyco Electronics.

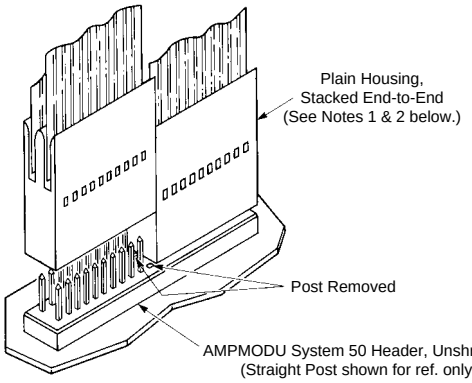

Notes: 1. Plain housings are end-to-end stackable on either straight or right-angle posted, unshrouded AMPMODU System 50 headers.

2. For end-to-end stacking, the two posts located between the adjoining housings must be removed to provide housing end clearance.

Typical Cable-to-Board Application of Plain Receptacle Housing

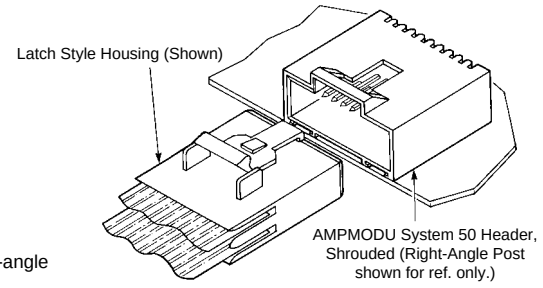

Typical Cable-to-Board Application of Latch Style Receptacle Housing

For complete product information, order Catalog 82007

Products for Industrial & Commercial Applications
Dimensions are shown for reference purposes only.
Dimensions are in inches and millimeters unless otherwise specified. Values in brackets are metric equivalents.
Specifications subject to change.
Technical Support Center
1-800-522-6752
www.tycoelectronics.com

.100 [2.54] Centerline Flexible Flat Conductor Contacts, Continuous Strip (for Sequential Termination)

Material and Finish:

Phosphor bronze; plated gold duplex or bright tin-lead overall (See chart below.)

Cable Thickness—.015 [0.38] max. (Other cable thicknesses available, consult Tyco Electronics.)

Conductor Width—.047 [1.19] min.

Related Product Data:

Unloaded Housings for:

Pin Contacts—pages 4043, 4055 & 4046

Receptacle Contacts—pages 4041, 4044-4049

Application Tooling—page 4059

Technical Documents:

CSA LR 7189-140

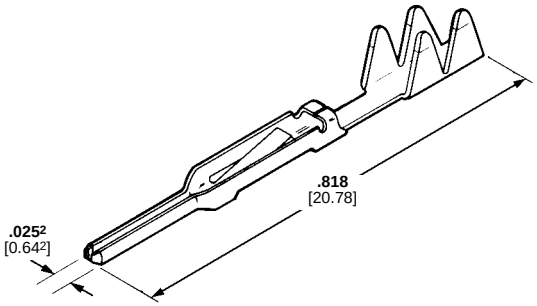

Pin Contact
(for use in housings)

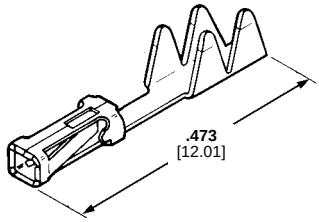

Receptacle Contact
(accepts .025[2] [0.64[2]] pins)

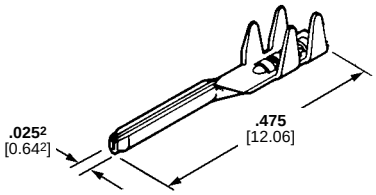

Pin Contact
(for use without housings)

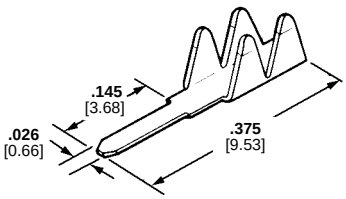

Solder Tab

Contacts for Flexible Flat Conductor Cable						Application Tooling	
Type	Configuration	Part Numbers				Machine	With Programmer
		Duplex[1]	Duplex[2]	Tin-Lead[3]	Duplex[4]		
Pin (for use in housings)	Strip	88117-3	88117-4	88117-5	88117-2	224910-1	318619-1
Receptacle (standard pressure)	Strip	487406-1	487406-2	487406-4	487406-3		
Receptacle (high pressure)*	Strip	487117-4	487117-5	487117-8	—		
Solder Tab**	Strip	—	88997-5	88997-2	—		
Pin (for use without housing)	Strip	88976-3	—	88976-2	—		

*High pressure receptacle contacts are recommended for a maximum connector size of 15 positions.
**Recommended hole size for solder tabs is .031-.035 [0.79-0.89] diameter.

[1] Duplex plated .000015 [0.00038] gold on mating area, .000100 [0.00254] min. bright tin-lead in crimp area, with entire contact underplated .000050 [0.00127] min. nickel.
[2] Duplex plated .000030 [0.00076] gold on mating area, .000100 [0.00254] min. bright tin-lead in crimp area, with entire contact underplated .000050 [0.00127] min. nickel.
[3] Plated .000100 [0.00254] min. bright tin-lead over .000050 [0.00127] min. nickel on entire contact.
[4] Duplex plated .000050 [0.00127] gold on mating area, .000100 [0.00254] min. bright tin-lead in crimp area, with entire contact underplated .000050 [0.00127] min. nickel.

Note: Round wire contacts—Page 4040

.100 [2.54] Centerline Round Wire Contacts, Continuous Strip and Loose Piece

Material and Finish:

Phosphor bronze; selectively gold plated, or plated bright tin-lead on entire contact (See chart below.)

Related Product Data:

Pin Housing used with—pages 4042, 4044 and 4045

Receptacle Housings used with—pages 4043, 4046 thru 4049

Application Tooling—Below and page 4059

Technical Documents:

Application Specification
114-16003



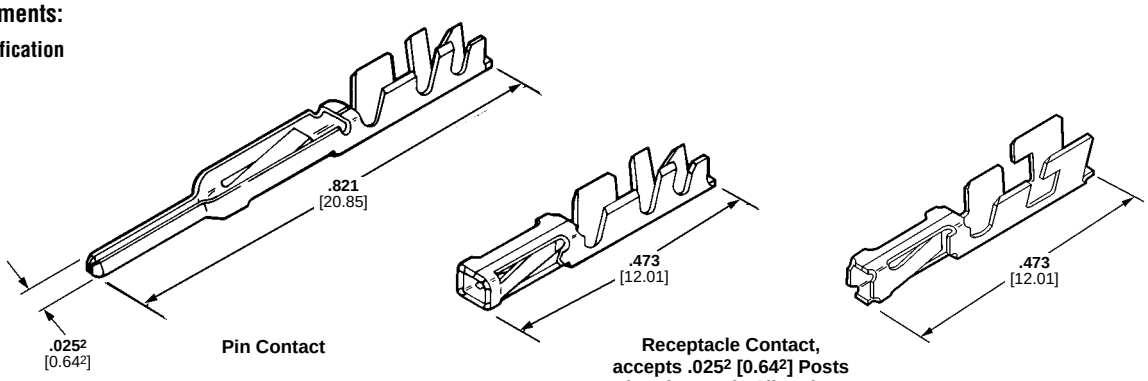

Pin Contact

Receptacle Contact, accepts .025² [0.64²] Posts (not for use in Slim-Line receptacle housings)

Contact Type	Wire Size Range AWG	Wire Size Range mm²	Ins. Dia. Range	Contact Finish	Part Numbers: Strip Form Contact	Application Tooling Applicator Numbers for: AMP-O-LECTRIC[4] Machine No. 565435-5	AMPOMATOR CLS II[5] Machine No. 815800-1	AMP-O-MATIC* Machine No. 463345-1	Hand Tool: Loose Piece Contact	Hand Tool	Instruction Sheet (IS)
Pin	32-26	0.03-0.15	**.025-.048** 0.64-1.22	Sel. Gold[1]	88048-4	466242-1	—	466933-1	—	—	—
				Sel. Gold[2]	88048-8	466242-1	—	466933-1	—	—	
				Tin-Lead	88048-2	466242-1	—	466933-1	—	—	
	26-22	0.12-0.4	**.040-.056** 1.02-1.42	Sel. Gold[1]	86557-6	466572-2	466572-1	466909-1	86561-6	90222-6	7974
				Sel. Gold[2]	86557-4	466572-2	466572-1	466909-1	86561-4	90222-6	
				Tin-Lead[3]	1-86557-4	466572-2	466572-1	466909-1	86561-9	90222-6	
	24-22		**.040-.056** 1.02-1.42	Sel. Gold[1]	86656-2	687620-2	—	—	86658-2	90378-1	7953
	24-22		**.040-.056** 1.02-1.42	Sel. Gold[6]	494033-2	567308-2	567308-1	—	494034-1	90378-1	
Receptacle	32-26	0.03-0.15	**.025-.048** 0.64-1.22	Sel. Gold[6]	88017-2	466242-1	—	466933-1	88017-6	90313-2	7973
	26-22	0.12-0.4	**.040-.056** 1.02-1.42	Sel. Gold[1]	86566-2	466572-2	466572-1	466909-1	86571-2	90222-6	7974
				Sel. Gold[2]	86566-4	466572-2	466572-1	466909-1	86571-4	90222-6	
				Tin-Lead[3]	86566-8	466572-2	466572-1	466909-1	86571-8	90222-6	
	24-22		**.040-.056** 1.02-1.42	Sel. Gold[1]	86655-2	567308-2	567308-1	—	86657-2	90378-1	7953

*Side Feed Stripper/Crimper Machine Model II.

[1] Selectively plated .000015 [0.00038] gold on mating area, gold flash on remainder of contact, with entire contact underplated .00050 [0.00127] min. nickel.
[2] Selectively plated .000030 [0.00076] gold on mating area, gold flash on remainder of contact, with entire contact underplated .00050 [0.00127] min. nickel.
[3] Plated .000100 [0.00254] min. bright tin-lead over .00050 [0.00127] min. nickel on entire contact.
[4] Crimp Control Monitor **Part Number** 567561-2.
[5] Crimp Control Monitor **Part Number** 567561-1.
[6] .000015 [0.00038] min. gold on mating area, .000100 [0.00254] min. tin-lead on crimping area, over .000050 [0.000127] min. nickel underplate on entire contact.

Note: Use Extraction Tool Number **91092-1** for end locking lance slot and Extraction Tool Number **91093-1** for side locking lance slot.
1. Flexible film contacts – page 4039

For complete product information, order Catalog 82007

Products for Industrial & Commercial Applications
Dimensions are shown for reference purposes only.
Dimensions are in inches and millimeters unless otherwise specified. Values in brackets are metric equivalents.
Specifications subject to change.
Technical Support Center 1-800-522-6752 www.tycoelectronics.com

.100 [2.54] Centerline Single Row Slim-Line Receptacle Housings

Material:

Black thermoplastic, flame retardant, 94V-0 rated



Plain Style Housing



Latch Style Housing



Housing with Detent

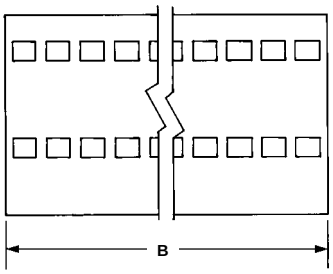

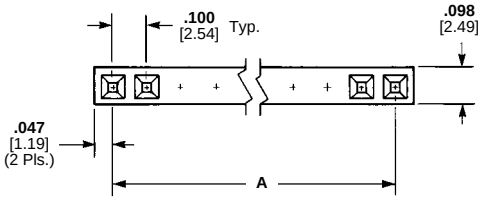

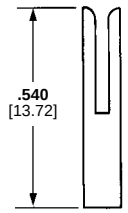

Plain

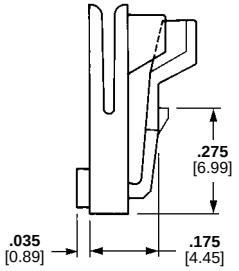

Latch

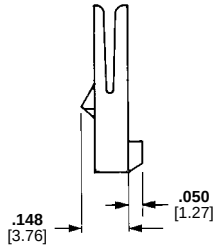

Detent

Note: Above dimensions are typical for all three styles shown on this page.

Related Product Data:

Receptacle Contacts—Strip, page 4039

Mateable Headers—Section 2, pages 2054, 2055, 2058, 2071, 2072, 2140-2142

Accessories (Keying Plug*)—page 4052

Application Tooling—page 4059

Technical Documents:

Product Specification
108-9024

Application Specification
114-16015

*Slim-line receptacle housings also can be supplied with filled cavities in the desired keying positions. Consult Tyco Electronics.

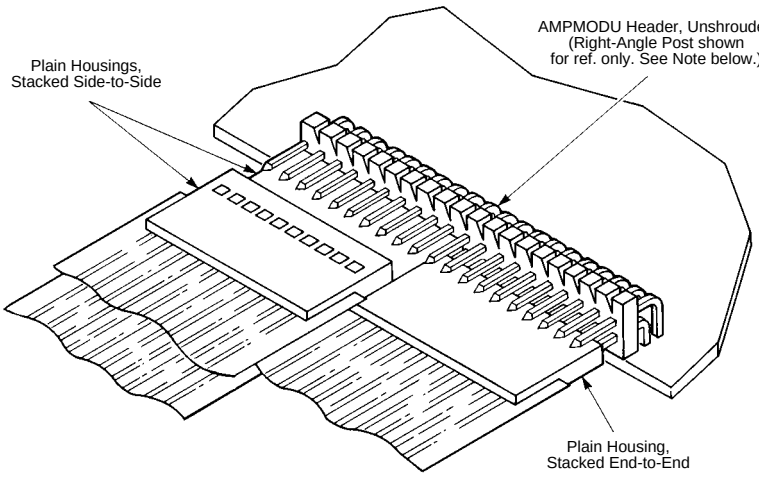

Note: Plain housings are side-to-side and end-to-end stackable on either straight or right-angle posted, unshrouded AMPMODU headers. Latch and detent styles are end-to-end stackable only.

Typical Cable-to-Board Application of Plain Receptacle Housing

For complete product information, order Catalog 82007

Products for Industrial & Commercial Applications
Dimensions are shown for reference purposes only.
Dimensions are in inches and millimeters unless otherwise specified. Values in brackets are metric equivalents.
Specifications subject to change.
Technical Support Center
1-800-522-6752
www.tycoelectronics.com

.100 [2.54] Centerline Single Row Slim-Line Receptacle Housings

No. of Positions	Dimensions		Receptacle Part Numbers			Extraction Tool
	A	B	Plain	Latch	Detent	
2	**.100** 2.54	**.194** 4.93	487378-1	487526-1	—	—
3	**.200** 5.08	**.294** 7.47	487378-2	487526-2	487769-1	—
4	**.300** 7.62	**.394** 10.01	487378-3	487526-3	487769-2	2-91200-4
5	**.400** 10.16	**.494** 12.55	487378-4	487526-4	487769-3	1-91200-9
6	**.500** 12.7	**.594** 15.09	487378-5	487526-5	487769-4	—
7	**.600** 15.24	**.694** 17.63	487378-6	487526-6	487769-5	91200-0
8	**.700** 17.78	**.794** 20.17	487378-7	487526-7	487769-6	2-91200-5
9	**.800** 20.32	**.894** 22.71	487378-8	487526-8	487769-7	—
10	**.900** 22.86	**.994** 25.25	487378-9	487526-9	487769-8	91200-5
11	**1.000** 25.4	**1.094** 27.79	1-487378-0	1-487526-0	487769-9	—
12	**1.100** 27.94	**1.194** 30.33	1-487378-1	1-487526-1	1-487769-0	—
13	**1.200** 30.48	**1.294** 32.87	1-487378-2	1-487526-2	1-487769-1	—
14	**1.300** 33.02	**1.394** 35.41	1-487378-3	1-487526-3	1-487769-2	—
15	**1.400** 35.56	**1.494** 37.95	1-487378-4	1-487526-4	1-487769-3	2-91200-3
16	**1.500** 38.1	**1.594** 40.49	1-487378-5	1-487526-5	1-487769-4	—
17	**1.600** 40.64	**1.694** 43.03	1-487378-6	1-487526-6	—	—
18	**1.700** 43.18	**1.794** 45.57	1-487378-7	1-487526-7	—	—
19	**1.800** 45.72	**1.894** 48.11	1-487378-8	1-487526-8	1-487769-7	91200-2
20	**1.900** 48.26	**1.994** 50.65	1-487378-9	1-487526-9	1-487769-8	—
21	**2.000** 50.8	**2.094** 53.19	2-487378-0	2-487526-0	—	—
22	**2.100** 53.34	**2.194** 55.73	2-487378-1	2-487526-1	2-487769-0	—
23	**2.200** 55.88	**2.294** 58.27	2-487378-2	2-487526-2	—	—
24	**2.300** 58.42	**2.394** 60.88	2-487378-3	2-487526-3	2-487769-2	—
25	**2.400** 60.96	**2.494** 63.35	2-487378-4	2-487526-4	—	2-91200-0
34	**3.300** 83.82	**3.394** 86.21	2-487378-5	—	—	—

Note: Other sizes of receptacle housings can be made available, consult Tyco Electronics.

For complete product information, order Catalog 82007

Products for Industrial & Commercial Applications
Dimensions are shown for reference purposes only.
Dimensions are in inches and millimeters unless otherwise specified. Values in brackets are metric equivalents.
Specifications subject to change.
Technical Support Center
1-800-522-6752
www.tycoelectronics.com

.100 [2.54] Centerline Single Row Pin Housings

Polarized Housings with Detent Window



Material:

Black thermoplastic, flame retardant, 94V-0 rated

Related Product Data:

Pin Contacts:
Strip—page 4039
Round Wire—page 4040
Mateable Receptacle Housings—page 4044
Application Tooling—page 4059

Technical Documents:

Product Specification
108-9024
Application Specification
114-16015

Without Mounting Ears

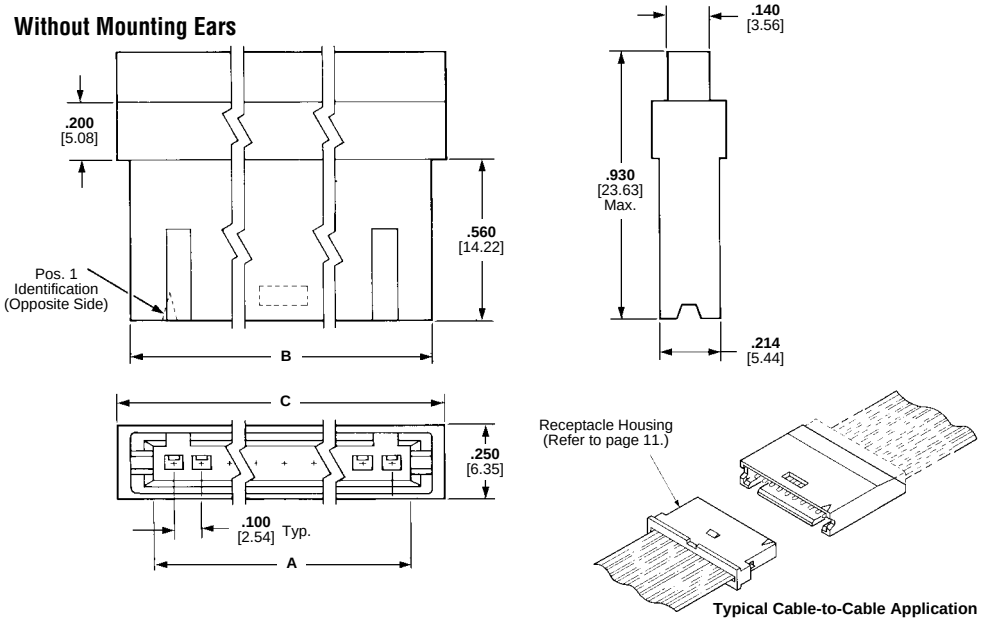

Typical Cable-to-Cable Application

No. of Positions	Dimensions			Part Numbers	
	A	B	C	Pin Housing	Extraction Tool
3	**.340** 8.64	**.460** 11.68	**.550** 13.97	494032-2	1-91047-9
4	**.440** 11.18	**.560** 14.22	**.650** 16.51	485893-2	—
5	**.540** 13.71	**.660** 16.76	**.750** 19.05	485893-3	1-91047-8
6	**.640** 16.26	**.760** 19.3	**.850** 21.59	485893-4	—
7	**.740** 18.80	**.860** 21.84	**.950** 24.13	485893-5	—
8	**.840** 21.34	**.960** 24.38	**1.050** 26.67	485893-6	2-91047-6
9	**.940** 23.88	**1.060** 26.92	**1.150** 29.21	485893-7	91047-1
10	**1.040** 26.42	**1.160** 29.46	**1.250** 31.75	485893-8	1-91047-0
11	**1.140** 28.96	**1.260** 32	**1.350** 34.29	485893-9	—
12	**1.240** 31.50	**1.360** 34.54	**1.450** 36.83	1-485893-0	1-91047-4
13	**1.340** 34.04	**1.460** 37.08	**1.550** 39.37	1-485893-1	—
14	**1.440** 36.58	**1.560** 39.62	**1.650** 41.91	1-485893-2	1-91047-5
15	**1.540** 39.12	**1.660** 42.16	**1.750** 44.45	1-485893-3	1-91047-6
16	**1.640** 41.66	**1.760** 44.7	**1.850** 46.99	1-485893-4	—
18	**1.840** 46.74	**1.960** 49.78	**2.050** 52.07	1-485893-6	—
20	**2.040** 51.82	**2.160** 54.86	**2.250** 57.15	1-485893-8	91047-5
25	**2.540** 64.52	**2.660** 67.56	**2.750** 69.85	2-485893-3	—

Notes: 1. Other sizes of pin housings can be made available, consult Tyco Electronics.
2. Use Extraction Tool Number **91092-1** for round wire contacts.

For complete product information, order Catalog 82007

Products for Industrial & Commercial Applications
Dimensions are shown for reference purposes only.
Dimensions are in inches and millimeters unless otherwise specified. Values in brackets are metric equivalents.
Specifications subject to change.
Technical Support Center
1-800-522-6752
www.tycoelectronics.com

.100 [2.54] Centerline Single Row Receptacle Housings

Polarized Housings with Detent



Material:

Black thermoplastic, flame retardant, 94V-0 rated

Related Product Data:

Receptacle Contacts:
Strip—page 4039
Round Wire—page 4040
Mateable Pin Housings—page 4043
Accessories:
Keying Plugs—page 4052
Application Tooling—page 4059

Technical Documents:

Product Specification
108-9024
Application Specification
114-16015

Without Mounting Ears

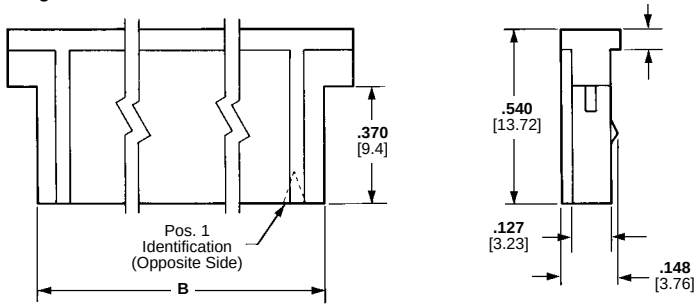

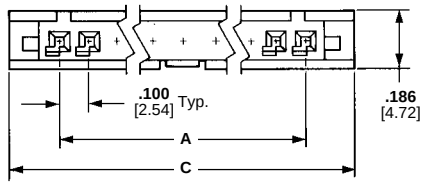

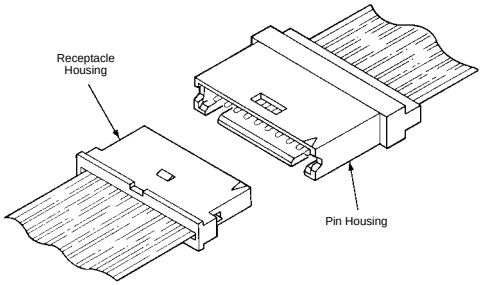

Typical Cable-to-Cable Application

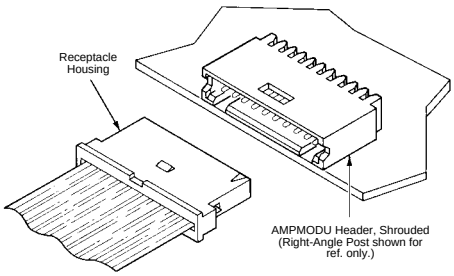

Typical Cable-to-Board Application

No. of Positions	Dimensions						Part Numbers	
	A		B		C		Receptacle Housing	Extraction Tool
	Inch	mm	Inch	mm	Inch	mm		
3	**.200**	5.08	**.320**	8.13	**.490**	12.45	88859-9	1-91047-9
4	**.300**	7.62	**.420**	10.67	**.590**	14.00	1-88859-0	—
5	**.400**	10.16	**.520**	13.21	**.690**	17.58	1-88859-1	1-91047-8
6	**.500**	12.7	**.620**	15.75	**.790**	20.07	88859-1	—
7	**.600**	15.24	**.720**	18.29	**.890**	22.61	1-88859-2	—
8	**.700**	17.78	**.820**	20.83	**.990**	25.15	88859-2	2-91047-6
9	**.800**	20.32	**.920**	23.37	**1.090**	27.69	1-88859-3	91047-1
10	**.900**	22.86	**1.020**	25.91	**1.190**	30.23	88859-3	1-91047-0
11	**1.000**	25.4	**1.120**	28.45	**1.290**	32.77	1-88859-4	—
12	**1.100**	27.94	**1.220**	30.99	**1.390**	35.31	88859-4	1-91047-4
13	**1.200**	30.48	**1.320**	33.53	**1.490**	37.85	88859-5	—
14	**1.300**	33.02	**1.420**	36.07	**1.590**	40.39	88859-7	1-91047-5
15	**1.400**	35.56	**1.520**	38.61	**1.690**	42.93	88859-6	1-91047-6
16	**1.500**	38.1	**1.620**	41.15	**1.790**	45.47	1-88859-5	—
18	**1.700**	43.18	**1.820**	46.23	**1.990**	50.55	1-88859-7	—
19	**1.800**	45.72	**1.920**	48.77	**2.090**	53.09	1-88859-8	91047-2
20	**1.900**	48.26	**2.020**	51.31	**2.190**	55.63	88859-8	91047-5
22	**2.100**	53.34	**2.220**	56.39	**2.390**	60.71	2-88859-0	—
25	**2.400**	60.96	**2.520**	64.01	**2.690**	68.33	2-88859-3	—
26	**2.500**	63.5	**2.620**	66.55	**2.790**	70.87	2-88859-4	—
29	**2.800**	71.12	**2.920**	74.17	**3.090**	78.49	2-88859-7	91047-3
30	**2.900**	73.66	**3.020**	76.71	**3.190**	81.03	2-88859-8	—
32	**3.100**	78.74	**3.220**	81.79	**3.390**	86.11	3-88859-0	—
35	**3.400**	86.36	**3.520**	89.41	**3.690**	93.73	3-88859-3	1-91047-2

Notes: 1. Use Extraction Tool No. **91092-1** for round wire contacts.
2. Receptacles mate with headers on page 4043.

For complete product information, order Catalog 82007

Products for Industrial & Commercial Applications
Dimensions are shown for reference purposes only.
Dimensions are in inches and millimeters unless otherwise specified. Values in brackets are metric equivalents.
Specifications subject to change.
Technical Support Center
1-800-522-6752
www.tycoelectronics.com

.100 [2.54] Centerline Double Row Pin Housings

Polarized Housings with Detent Windows, Shrouded 4 Sides



Material:

Black thermoplastic, flame retardant, 94V-0 rated

Related Product Data:

Pin Contacts:
Strip—page 4039
Round Wire—page 4040

Mateable Receptacle:
Housings—pages 4047 thru 4049

Accessories—
Jackscrews—pages 4053, 4054

Application Tooling—
page 4059

Technical Documents:

Product Specification
108-9024

Application Specification
114-16015

With Mounting Ears

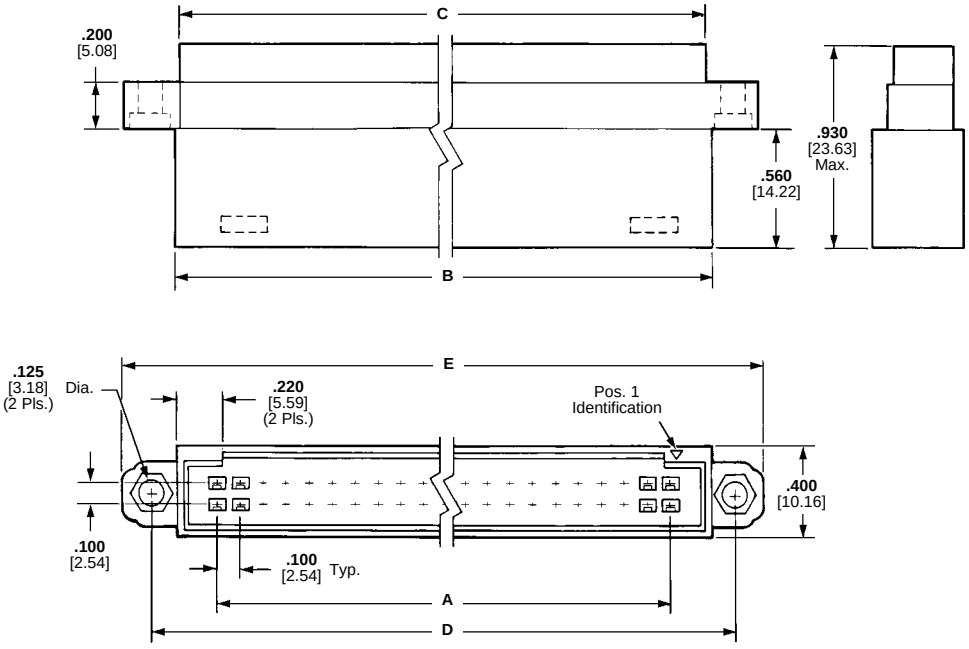

Without Mounting Ears



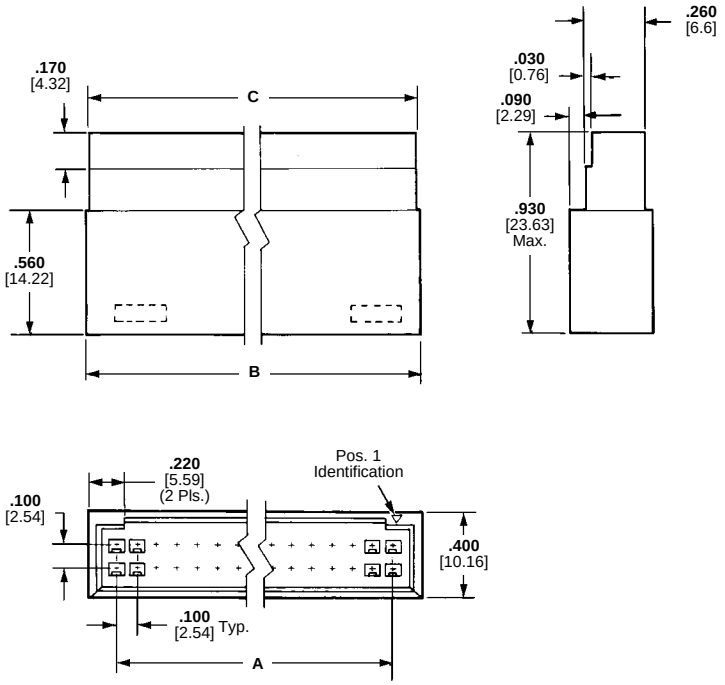

For complete product information, order Catalog 82007

Products for Industrial & Commercial Applications
Dimensions are shown for reference purposes only.
Dimensions are in inches and millimeters unless otherwise specified. Values in brackets are metric equivalents.
Specifications subject to change.
Technical Support Center
1-800-522-6752
www.tycoelectronics.com

.100 [2.54] Centerline Double Row Pin Housings

No. of Positions	Dimensions					Pin Housing Part Numbers		Extraction Tool
	A	B	C	D	E	With Mounting Ears	Without Mounting Ears	
6	**.200** 5.08	**.580** 14.73	**.550** 13.97	**.810** 20.57	**1.060** 26.92	3-88190-2	3-88189-2	1-91047-9
10	**.400** 10.16	**.780** 19.81	**.750** 19.05	**1.010** 25.65	**1.260** 32	3-88190-0	3-88189-0	1-91047-8
12	**.500** 12.7	**.880** 22.35	**.850** 21.59	—	—	—	3-88189-4	—
16	**.700** 17.78	**1.080** 27.43	**1.050** 26.67	**1.310** 33.27	**1.560** 39.62	3-88190-4	—	2-91047-6
18	**.800** 20.32	**1.180** 29.97	**1.150** 29.21	**1.410** 35.81	**1.660** 42.16	88190-6	88189-4	91047-1
20	**.900** 22.86	**1.280** 32.51	**1.250** 31.75	**1.510** 38.35	**1.760** 44.7	88190-8	88189-6	1-91047-0
24	**1.100** 27.94	**1.480** 37.59	**1.450** 36.83	**1.710** 43.43	**1.960** 49.78	1-88190-0	88189-8	1-91047-4
26	**1.200** 30.48	**1.580** 40.13	**1.550** 39.37	**1.810** 45.97	**2.060** 52.32	1-88190-2	1-88189-0	—
28	**1.300** 33.02	**1.680** 42.67	**1.650** 41.91	**1.910** 48.51	**2.160** 54.86	1-88190-4	—	1-91047-5
34	**1.600** 40.64	**1.980** 50.29	**1.950** 49.53	—	—	3-88190-8	3-88189-6	—
38	**1.800** 45.72	**2.180** 55.37	**2.150** 54.61	**2.410** 61.21	**2.660** 67.56	88190-2	88189-2	91047-2
40	**1.900** 48.26	**2.280** 57.91	**2.250** 57.15	**2.510** 63.75	**2.760** 70.1	1-88190-8	—	91047-5
50	**2.400** 60.96	**2.780** 70.61	**2.750** 69.85	**3.010** 76.45	**3.260** 82.8	88190-4	2-88189-0	—
66	**3.200** 81.28	**3.580** 90.93	**3.550** 90.17	**3.810** 96.77	**4.060** 103.12	2-88190-6	—	—
70	**3.400** 86.36	**3.780** 96.01	**3.750** 95.25	**4.010** 101.85	**4.260** 108.2	—	—	1-91047-2

Notes: 1. All housings listed above have no markings, except for AMP and Pos. 1 Identification, which are molded into the housing. Housings with special markings can be made available, consult Tyco Electronics.
2. Housing sizes smaller than 20-position have only one detent window.
3. Use Extraction Tool Number **91092-1** for round wire contacts.

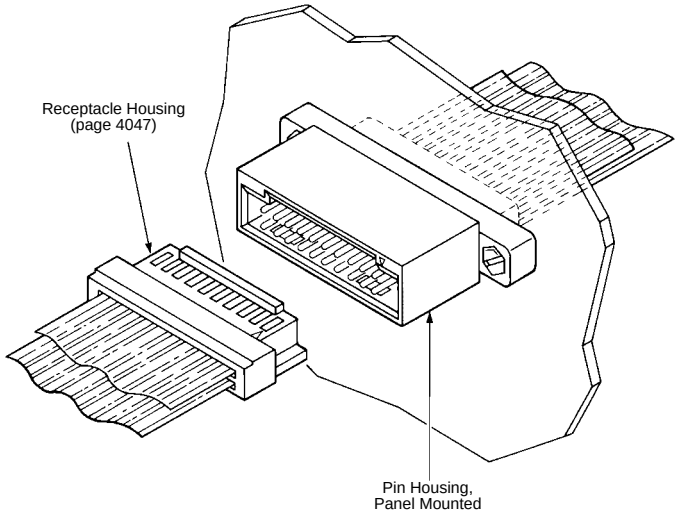

Typical Cable-to-Cable Application

For complete product information, order Catalog 82007

Products for Industrial & Commercial Applications
Dimensions are shown for reference purposes only.
Dimensions are in inches and millimeters unless otherwise specified. Values in brackets are metric equivalents.
Specifications subject to change.
Technical Support Center
1-800-522-6752
www.tycoelectronics.com

.100 [2.54] Centerline Double Row Receptacle Housings

Polarized Housings with Detents



Material:

Black thermoplastic, flame retardant, 94V-0 rated

Related Product Data:

Receptacle Contacts:
Strip—page 4039
Round Wire—page 4040

Mateable Pin Housings—pages 4045, 4046

Mateable Headers—Section 2, page 2074

Accessories:
Jackscrews—pages 4053, 4054
Keying Plugs—page 4052

Application Tooling—page 4059

Technical Documents:

Product Specification
108-9024

Application Specification
114-16015



With Mounting Ears

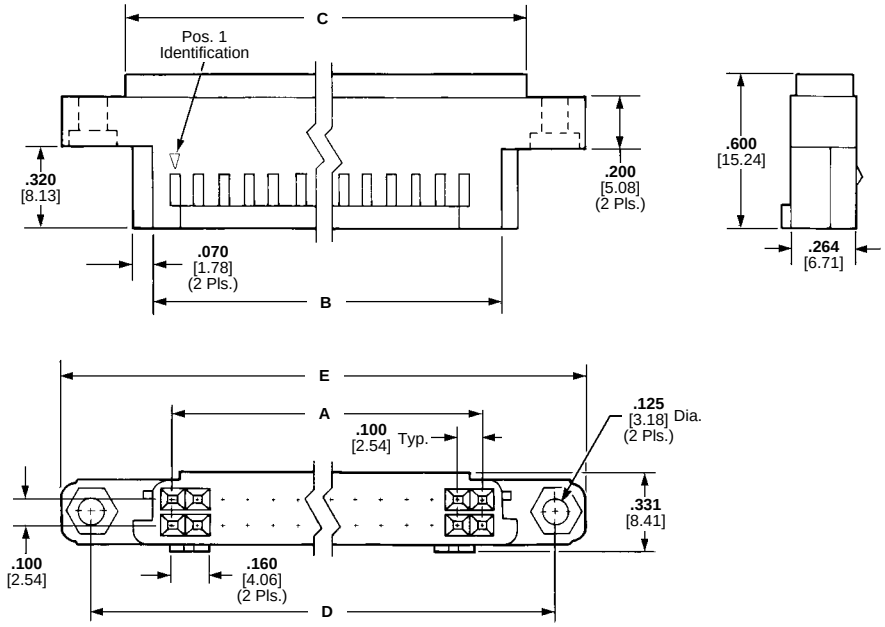

Without Mounting Ears

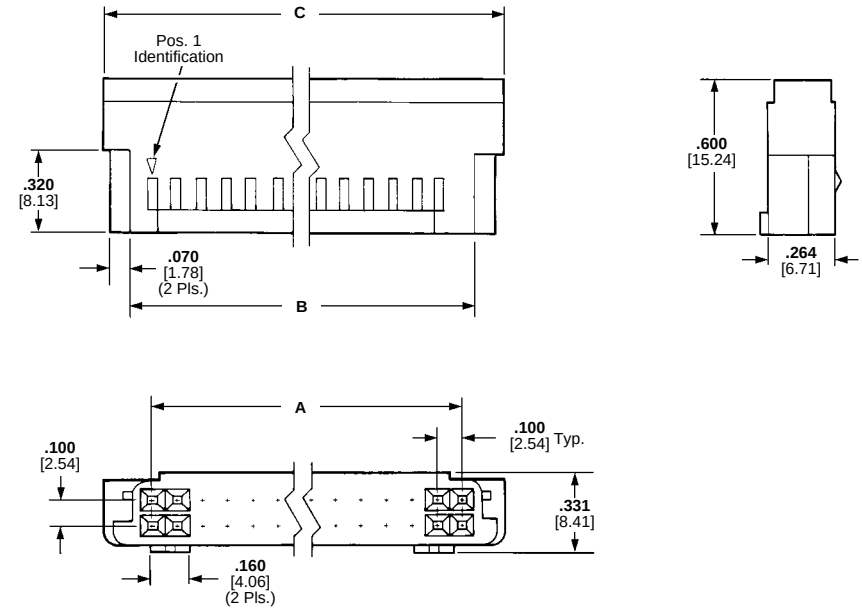

For complete product information, order Catalog 82007

Products for Industrial & Commercial Applications
Dimensions are shown for reference purposes only.
Dimensions are in inches and millimeters unless otherwise specified. Values in brackets are metric equivalents.
Specifications subject to change.
Technical Support Center
1-800-522-6752
www.tycoelectronics.com

.100 [2.54] Centerline Double Row Receptacle Housings

No. of Positions	Dimensions					Receptacle Housing Part Numbers		Extraction Tool
	A	B	C	D	E	With Mounting Ears Dimensions A-E	Without Mounting Ears Dimensions A, B, C Only	
6	**.200** 5.08	**.340** 8.64	**.550** 13.97	**.810** 20.57	**1.060** 26.92	—	3-88179-2	—
8	**.300** 7.62	**.440** 11.18	**.650** 16.51	—	—	—	4-88179-0	2-91200-4
10	**.400** 10.16	**.540** 13.72	**.750** 19.05	**1.010** 25.65	**1.260** 32	88637-7	3-88179-0	1-91200-9
12	**.500** 12.7	**.640** 16.26	**.850** 21.59	**1.110** 28.19	**1.360** 34.54	—	3-88179-4	—
16	**.700** 17.78	**.840** 21.34	**1.050** 26.67	**1.310** 33.27	**1.560** 39.62	88637-3	—	—
18	**.800** 20.32	**.940** 23.88	**1.150** 29.21	**1.410** 35.81	**1.660** 42.16	88637-9	1-88179-0	—
20	**.900** 22.86	**1.040** 26.42	**1.250** 31.75	**1.510** 38.35	**1.760** 44.7	1-88637-1	88179-5	91200-5
24	**1.100** 27.94	**1.240** 31.5	**1.450** 36.83	**1.710** 43.43	**1.960** 49.78	1-88637-3	1-88179-4	—
26	**1.200** 30.48	**1.340** 34.04	**1.550** 39.37	**1.810** 45.97	**2.060** 52.32	1-88637-5	1-88179-6	—
28	**1.300** 33.02	**1.440** 36.58	**1.650** 41.91	**1.910** 48.51	**2.160** 54.86	1-88637-7	1-88179-8	—
34	**1.600** 40.64	**1.740** 44.2	**1.950** 49.53	**2.210** 56.13	**2.460** 62.48	—	3-88179-6	—
36	**1.700** 43.18	**1.840** 46.74	**2.050** 52.07	—	—	—	2-88179-0	—
38	**1.800** 45.72	**1.940** 49.28	**2.150** 54.61	**2.410** 61.21	**2.660** 67.56	2-88637-1	88179-6	91200-2
40	**1.900** 48.26	**2.040** 51.82	**2.250** 57.15	**2.510** 63.75	**2.760** 70.1	2-88637-3	2-88179-2	—
44	**2.100** 53.34	**2.240** 56.9	**2.450** 62.23	**2.710** 68.83	**2.960** 75.18	2-88637-5	2-88179-4	—
50	**2.400** 60.96	**2.540** 64.52	**2.750** 69.85	**3.010** 76.45	**3.260** 82.8	2-88637-7	1-88179-2	2-91200-0
58	**2.800** 71.12	**2.940** 74.68	**3.150** 80.01	**3.410** 86.61	**3.660** 92.96	2-88637-9	2-88179-6	91200-3
60	**2.900** 73.66	**3.040** 77.22	**3.250** 82.55	**3.510** 89.15	**3.760** 95.5	3-88637-1	—	—
66	**3.200** 81.28	**3.340** 84.84	**3.550** 90.17	**3.810** 96.77	**4.060** 103.12	3-88637-3	88179-8	91200-4
70	**3.400** 86.36	**3.540** 89.92	**3.750** 95.25	**4.010** 101.85	**4.260** 108.2	3-88637-5	—	—

Notes: 1. All housings listed above have no markings, except for AMP and Pos. 1 Identification, which are molded into the housing. Housings with special markings can be made available, consult Tyco Electronics.
2. Housing sizes smaller than 20-position have only one detent.
3. Use Extraction Tool Number **91093-1** for round wire contacts.

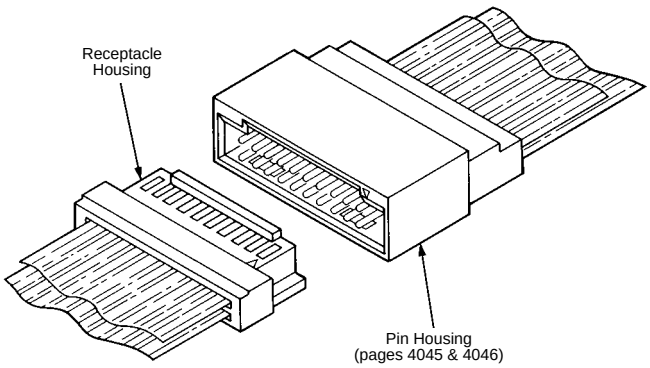

Typical Cable-to-Cable Application

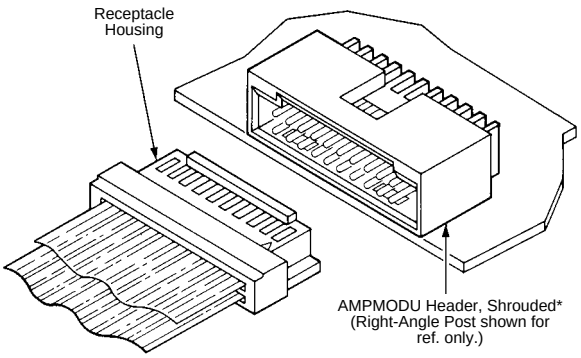

*Mating AMPMODU shrouded headers have a .150 [3.81] end dimension (from inside shroud wall to centerline of first post).

Typical Cable-to-Board Application

For complete product information, order Catalog 82007

Products for Industrial & Commercial Applications
Dimensions are shown for reference purposes only.
Dimensions are in inches and millimeters unless otherwise specified. Values in brackets are metric equivalents.
Specifications subject to change.
Technical Support Center 1-800-522-6752 www.tycoelectronics.com

.100 [2.54] Centerline Double Row Receptacle Housings

With Center Polarization



Material:

Black thermoplastic, flame retardant, 94V-0 rated

Related Product Data:

Receptacle Contacts used with: Strip—page 4039

Mateable Pin Headers—Section 2, page 2074

Accessories:

Keying Plugs—page 4052

Application Tooling—page 4059

Technical Documents:

Product Specification 108-9024

Application Specification 114-16015

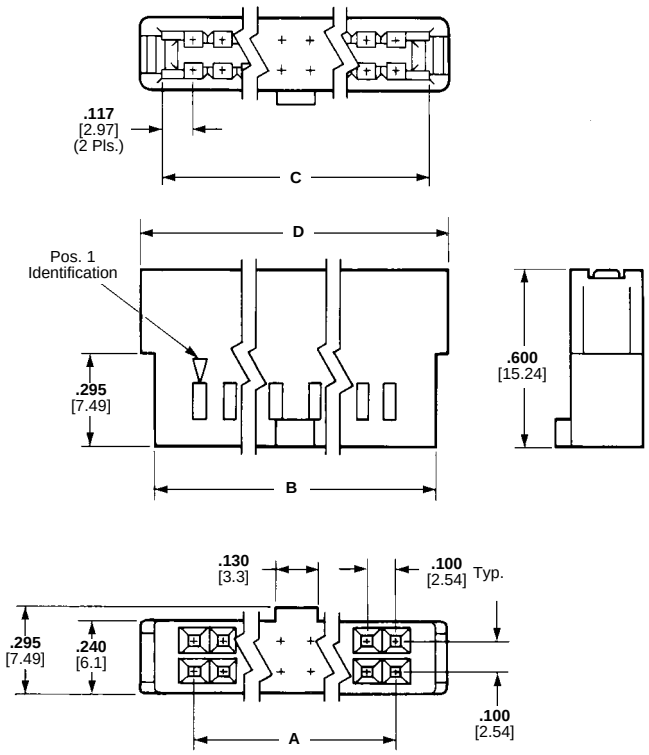

No. of Positions	Dimensions				Part Numbers	
	A	B	C	D	Receptacle Housing	Extraction Tool
10	**.400** 10.16	**.680** 17.27	**.634** 16.1	**.750** 19.05	487223-1	1-91200-9
14	**.600** 15.24	**.880** 22.35	**.834** 21.18	**.950** 24.13	487223-2	—
16	**.700** 17.78	**.980** 24.89	**.934** 23.72	**1.050** 26.67	487223-3	—
20	**.900** 22.86	**1.180** 29.97	**1.134** 28.8	**1.250** 31.75	487223-5	91200-5
24	**1.100** 27.94	**1.380** 35.05	**1.334** 33.88	**1.450** 36.83	487223-6	—
26	**1.200** 30.48	**1.480** 37.59	**1.434** 36.42	**1.550** 39.37	487223-7	—
30	**1.400** 35.56	**1.680** 42.67	**1.634** 41.5	**1.750** 44.45	487223-8	—
34	**1.600** 40.64	**1.880** 47.75	**1.834** 46.58	**1.950** 49.53	487223-9	—
40	**1.900** 48.26	**2.180** 55.37	**2.134** 54.2	**2.250** 57.15	1-487223-0	—
50	**2.400** 60.96	**2.680** 68.07	**2.634** 66.9	**2.750** 69.85	1-487223-2	2-91200-0
60	**2.900** 73.66	**3.180** 80.77	**3.134** 79.6	**3.250** 82.55	1-487223-5	—

Notes: 1. Tin plated contacts are not recommended for use in receptacle housings larger than 40-position.
2. Other housing sizes can be made available, consult Tyco Electronics.
3. Use Extraction Tool, **Part Number** 91093-1**,** for round wire contacts.

.100 [2.54] Centerline Trio-Mate Connectors



Material and Finish:

Housing—Black thermoplastic, glass reinforced, 94V-0 rated

Contacts—Phosphor bronze, tin plated

Related Product Data:

Cable with tin plated conductors with exposed ends

Technical Documents:

Product Specification
108-2038

Application Specification
114-2052

Vertical Cable Entry for .062 [1.57] and .093 [2.36] Thick Pc Boards

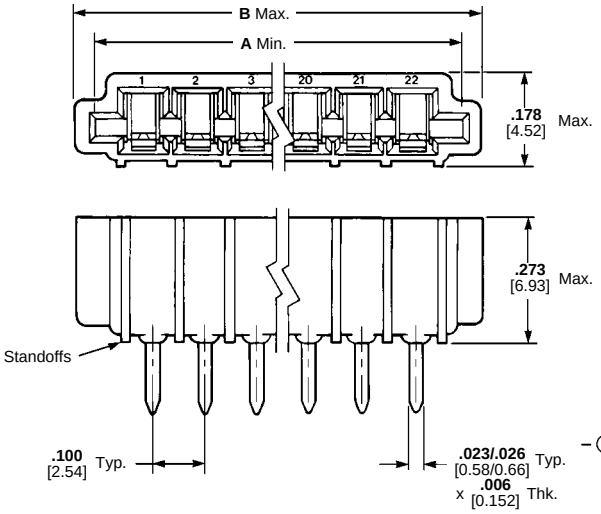

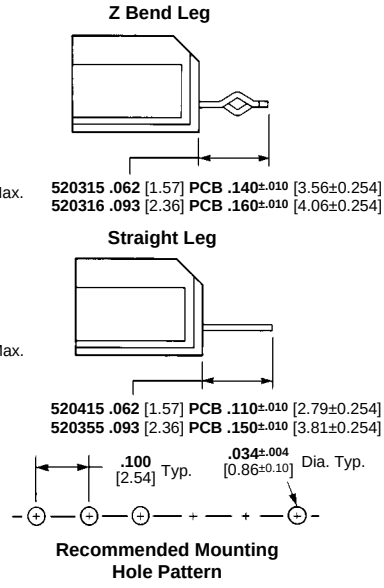



Product Facts

- **Accepts FFC cable, flexible etched circuitry or membrane switch circuitry .005 to .015 [0.13 to 0.38] thick in contact area**
- **High extraction force**
- **Reusable 25 times with same cable thickness**
- **Certified by Canadian Standards Association, File No. LR 53951-10**

Horizontal Cable Entry for .062 [1.57] Thick Pc Boards

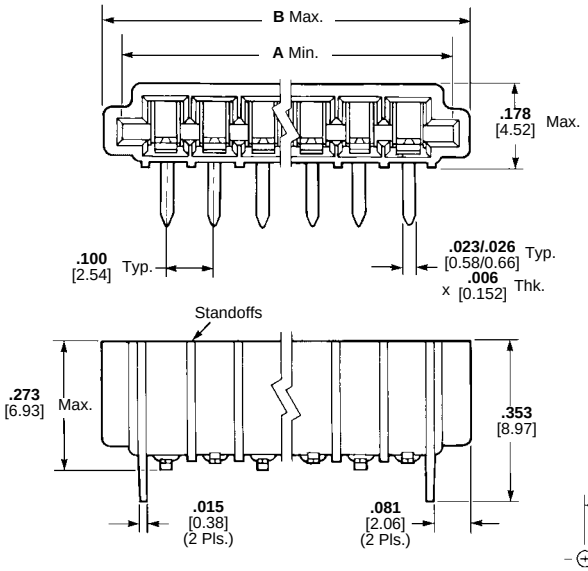

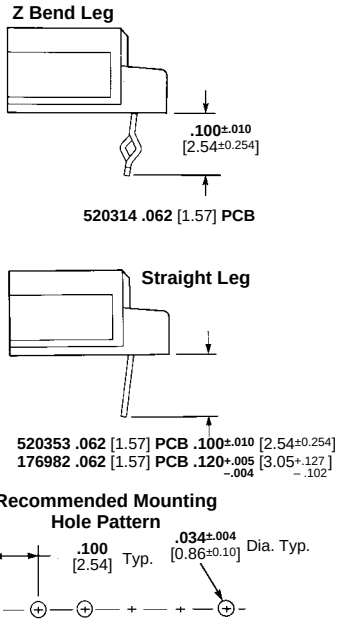

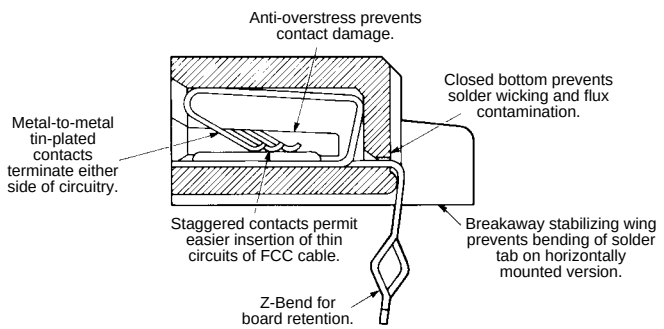

For complete product information, order Catalog 82007

.100 [2.54] Centerline Trio-Mate Connectors

No. of Positions	Dimensions A		Dimensions B		Part Numbers: Vertical Cable Entry, For .062 [1.57] Thk. Pc Board, Str.	Vertical Cable Entry, For .062 [1.57] Thk. Pc Board, Z Bend	Vertical Cable Entry, For .093 [2.36] Thk. Pc Board, Str.	Vertical Cable Entry, For .093 [2.36] Thk. Pc Board, Z Bend	Horizontal Cable Entry, For .062 [1.57] Thk. Pc Board, Str.	Horizontal Cable Entry, For .062 [1.57] Thk. Pc Board, Str.	Horizontal Cable Entry, For .062 [1.57] Thk. Pc Board, Z Bend
2	**.306**	7.77	**.383**	9.73	520415-2	520315-2	520355-2	520316-2	176982-2	520353-2	520314-2
3	**.406**	10.31	**.483**	12.27	520415-3	520315-3	520355-3	520316-3	176982-3	520353-3	520314-3
4	**.506**	12.85	**.583**	14.81	520415-4	520315-4	520355-4	520316-4	176982-4	520353-4	520314-4
5	**.606**	15.39	**.683**	17.35	520415-5	520315-5	520355-5	520316-5	176982-5	520353-5	520314-5
6	**.706**	17.93	**.783**	19.89	520415-6	520315-6	520355-6	520316-6	176982-6	520353-6	520314-6
7	**.806**	20.47	**.883**	22.43	520415-7	520315-7	520355-7	520316-7	176982-7	520353-7	520314-7
8	**.906**	23.01	**.983**	24.97	520415-8	520315-8	520355-8	520316-8	176982-8	520353-8	520314-8
9	**1.006**	25.55	**1.083**	27.51	520415-9	520315-9	520355-9	520316-9	176982-9	520353-9	520314-9
10	**1.106**	28.09	**1.183**	30.5	1-520415-0	1-520315-0	1-520355-0	1-520316-0	1-176982-0	1-520353-0	1-520314-0
11	**1.206**	30.63	**1.283**	32.59	1-520415-1	1-520315-1	1-520355-1	1-520316-1	1-176982-1	1-520353-1	1-520314-1
12	**1.306**	33.17	**1.383**	35.13	1-520415-2	1-520315-2	1-520355-2	1-520316-2	1-176982-2	1-520353-2	1-520314-2
13	**1.406**	35.71	**1.483**	37.67	1-520415-3	1-520315-3	1-520355-3	1-520316-3	1-176982-3	1-520353-3	1-520314-3
14	**1.506**	38.25	**1.583**	40.21	1-520415-4	1-520315-4	1-520355-4	1-520316-4	1-176982-4	1-520353-4	1-520314-4
15	**1.606**	40.79	**1.683**	42.75	1-520415-5	1-520315-5	1-520355-5	1-520316-5	1-176982-5	1-520353-5	1-520314-5
16	**1.706**	43.33	**1.783**	45.29	1-520415-6	1-520315-6	1-520355-6	1-520316-6	1-176982-6	1-520353-6	1-520314-6
17	**1.806**	45.87	**1.883**	47.83	1-520415-7	1-520315-7	1-520355-7	1-520316-7	1-176982-7	1-520353-7	1-520314-7
18	**1.906**	48.41	**1.983**	50.37	1-520415-8	1-520315-8	1-520355-8	1-520316-8	1-176982-8	1-520353-8	1-520314-8
19	**2.006**	50.95	**2.083**	52.91	1-520415-9	1-520315-9	1-520355-9	1-520316-9	1-176982-9	1-520353-9	1-520314-9
20	**2.106**	53.49	**2.183**	55.45	2-520415-0	2-520315-0	2-520355-0	2-520316-0	2-176982-0	2-520353-0	2-520314-0
21	**2.206**	56.03	**2.283**	57.99	2-520415-1	2-520315-1	2-520355-1	2-520316-1	2-176982-1	2-520353-1	2-520314-1
22	**2.306**	58.57	**2.383**	60.53	2-520415-2	2-520315-2	2-520355-2	2-520316-2	2-176982-2	2-520353-2	2-520314-2

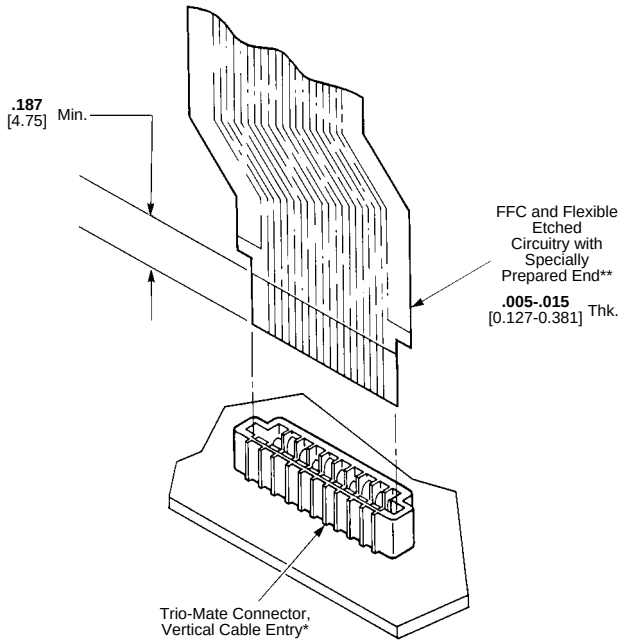

*Vertical cable entry configuration shown for reference only. Termination of either configuration is completed by simply inserting flexible etched circuitry into housing (prepared end on either side).

**Consult Tyco Electronics for additional information.

Note: Special preparation of flexible etched circuitry is required, refer to AMP Application Specification No. 114-2062.

Typical Flexible Etched Circuitry-to-Board Application

Electrical Characteristics:

Dielectric Withstanding Voltage—1.4 KVAC, one minute hold (AMP Specification No. 109-29-1)

Insulation Resistance—5000 megohms (min.), initial (AMP Specification No. 109-28-4)

Capacitance—1.0 pf (max.) (AMP Specification No. 109-47, Condition C)

Current/Voltage—250 VAC @ 1 ampere max.

Mechanical Characteristics:

Vibration—10-55-10 Hz traversed in one minute at .06 [1.52] total excursion (AMP Specification No. 109-21-1, Condition A)

Physical Shock—100 G,s sawtooth in 6 milliseconds (AMP Specification No. 109-26-9, Condition I)

Environmental Characteristics:

Thermal Shock—25 cycles between –55°C and +105°C for tin; between –55°C and +85°C for conductive ink (AMP Specification No. 109-22)

Temperature/Humidity Cycling—10 cycles between +25°C and +65°C at 95% RH (AMP Specification No. 109-23, Method III, Condition B, less Step 7a)

Industrial Gas—96 hours of 200 ppb each of nitrogen dioxide, sulfur dioxide and hydrogen sulfide

Operating Temperature— –55°C to 105°C for tin plated circuitry –55°C to 85°C for conductive ink

Accessories, .100 [2.54] Centerline

Keying Plugs for Receptacle Housings

Material:

Nylon



Keying Plug
Part Number 86286-1
(Used with contact;
plugs into contact)

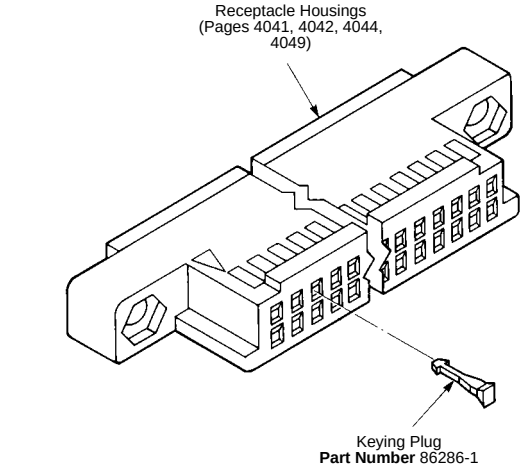

Note: Keying plug, **Part Number** 86286-1**,** can be used in all .100 [2.54] centerline receptacle housings, except pcb edge connectors.



Keying Plug
Part Number 87077-2
(Used without contact;
plugs directly into
back-end of housing)

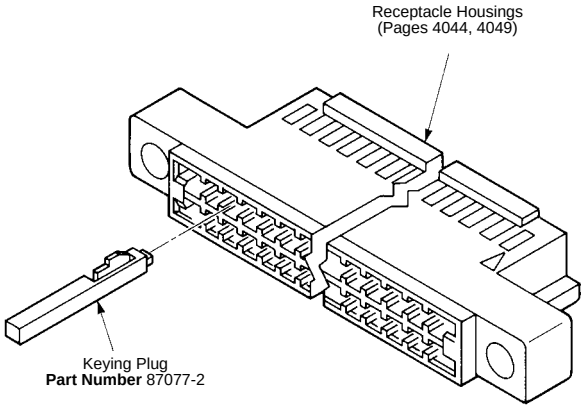

Note: Keying plug, **Part Number** 87077-2, can be used in all .100 [2.54] centerline receptacle housings, except slim-line versions and pcb edge connectors.

For complete product information, order Catalog 82007

Products for Industrial & Commercial Applications
Dimensions are shown for reference purposes only.
Dimensions are in inches and millimeters unless otherwise specified. Values in brackets are metric equivalents.
Specifications subject to change.
Technical Support Center
1-800-522-6752
www.tycoelectronics.com

Accessories, .100 [2.54] Centerline

Jackscrews for Cable-to-Cable Applications

Fixed Jackscrews

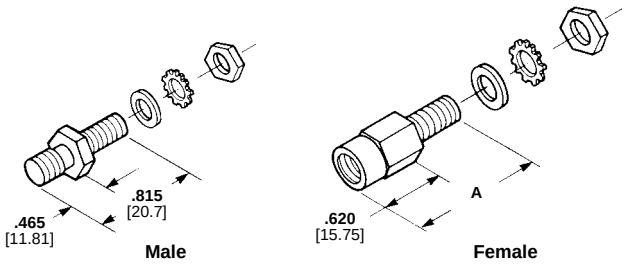

Turnable Jackscrews

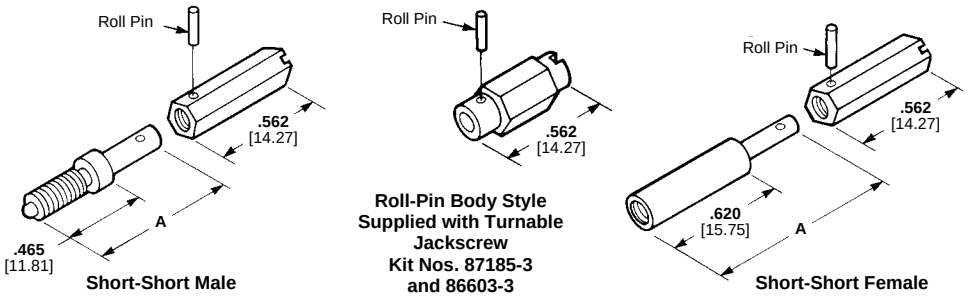

Type	Material	Fixed Jackscrew		Turnable Jackscrew	
		Dim. A	Kit	Dim. A	Kit
Male	Stainless Steel	**.815** 20.7	200874-1	**.812** 20.62	87185-3
Female	Stainless Steel	**1.095** 27.81	1-86602-4	**.972** 24.69	86603-3

Notes: 1. These jackscrews can be used with all housings having mounting ears.
2. Refer to AMP Instruction Sheets No. 408-6557 and 408-7126 for installation instructions.
3. Other jackscrew kits are available, consult Tyco Electronics.

Typical Cable-to-Cable Application

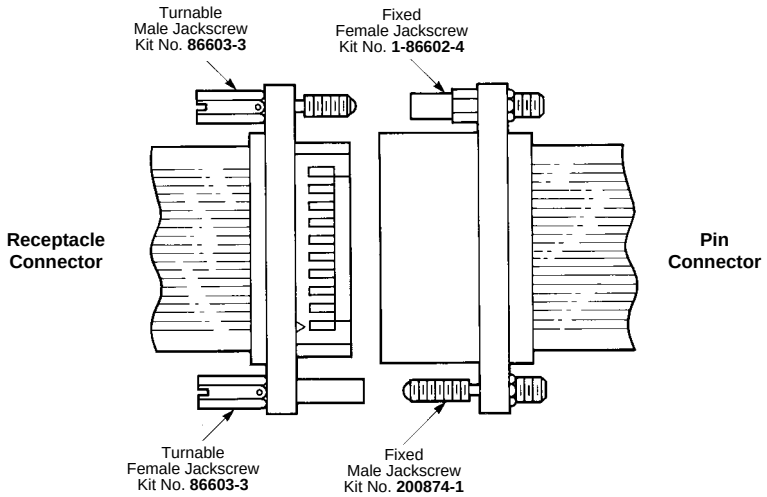

For complete product information, order Catalog 82007

Products for Industrial & Commercial Applications
Dimensions are shown for reference purposes only.
Dimensions are in inches and millimeters unless otherwise specified. Values in brackets are metric equivalents.
Specifications subject to change.
Technical Support Center
1-800-522-6752
www.tycoelectronics.com

Accessories, .100 [2.54] Centerline

Jackscrews for Cable-to-Board Applications

Fixed Jackscrews

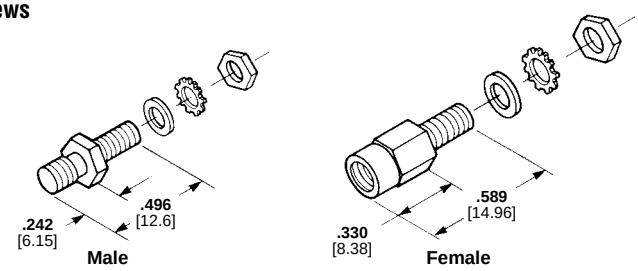

Turnable Jackscrews

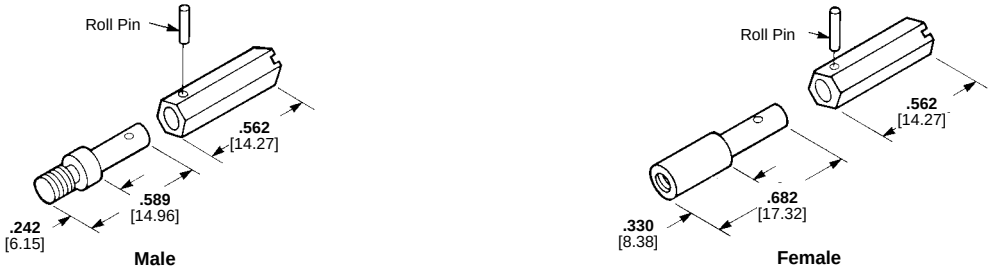

Type	Material	Part Numbers Jackscrew Kit No.
Fixed Male	Stainless Steel	88619-2
Turnable Male	Stainless Steel	88618-2
Fixed Female	Stainless Steel	88617-2
Turnable Female	Stainless Steel	88616-2

Notes: 1. Refer to AMP Instruction Sheets No. 408-6557 and 408-7126 for installation instructions.
2. Other jackscrew kits are available, consult Tyco Electronics.

Typical Cable-to-Board Application

Receptacle Connector

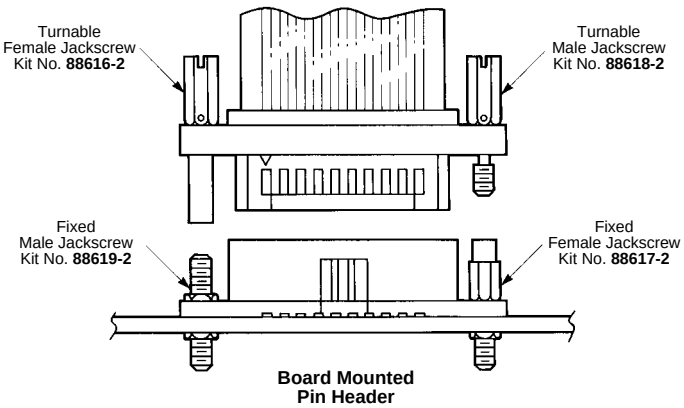

For complete product information, order Catalog 82007

Products for Industrial & Commercial Applications
Dimensions are shown for reference purposes only.
Dimensions are in inches and millimeters unless otherwise specified. Values in brackets are metric equivalents.
Specifications subject to change.
Technical Support Center
1-800-522-6752
www.tycoelectronics.com

1.00 [.039] FPC (Flexible Printed Circuit) Connectors

UPDATED 11/01

Product Facts

- **High-density packaging**
- **Low-profile design**
- **Available in 4 thru 30 positions**
- **Choice of top or bottom contact styles**
- **Surface mount application**
- **Zero insertion force**
- **Durability—30 cycles**
- **Convenient embossed tape packaging**

Technical Documents:

Product Specifications:

108-5369—0.5 [.020] FPC Connector
108-1393—1.0 [.039] FPC Connector

As the demands for higher-density packaging of electronic equipment increases, the use of flexible printed circuits (FPC) to reduce size, weight and assembly costs has expanded. FPC is finding wide acceptance in the computer industry, particularly in such applications as Lap Top, Notebook, Palm Top and Note Pad Computers. Other markets include: Disk Drives, Printers, Plotters, Copiers, Cellular Phones, and Medical Equipment.

AMP FPC connectors have been developed to meet the challenges of this expanding market. Available in 1.0 [.039] centerline spacing, they incorporate all the most wanted features: low profile, light-weight, AMP quality and economy, plus convenient embossed tape packaging.

FPC Connectors are available in 4 through 30 positions. A choice of top or bottom contact styles is provided. Contacts are phosphor bronze, tin-lead plated on the mating and solder tail end, and are highly durable.

1.0 [.039] FPC Connectors

UPDATED 11/01

Vertical Surface Mount

Material and Finish:

Housing—LCP
Solder Tabs—Phosphor bronze
Contact—Phosphor bronze, tin-lead plated

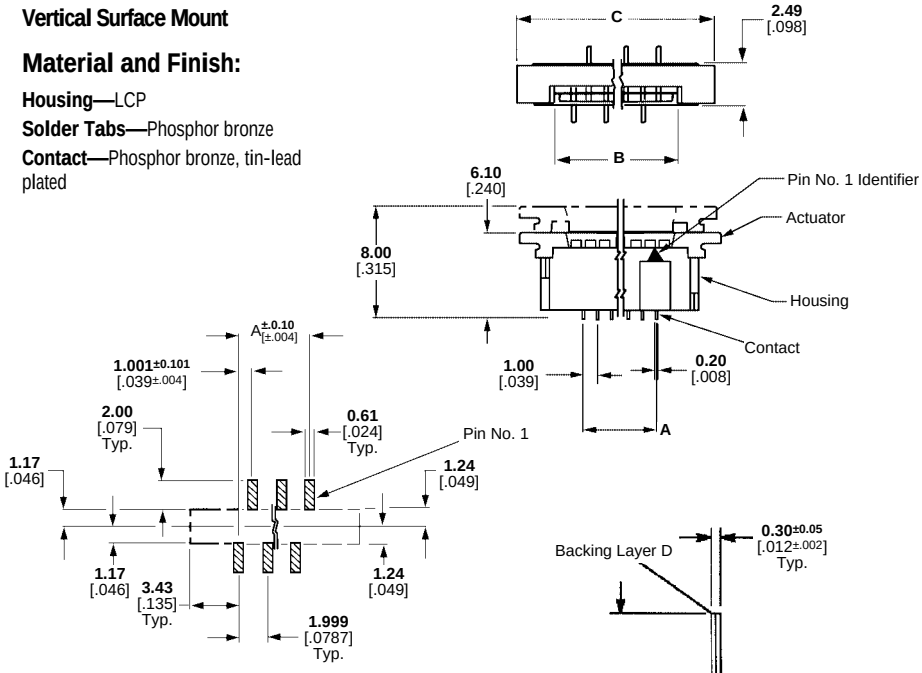

Recommended PC Board Pad Layout

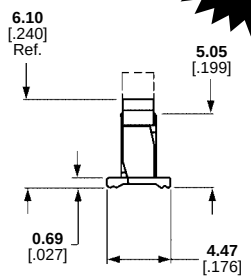

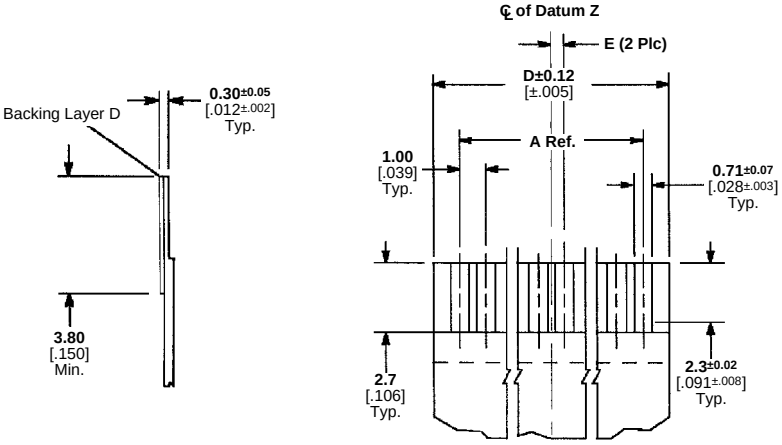

Recommended Flexible Printed Cable Layout

No. of Positions	Dimensions A	B	C	D	E	Part Numbers
4	**3.00** .118	**5.30** .209	**11.91** .469	**5.00** .197	**0.50** .020	487953-4
5	**4.00** .157	**6.30** .249	**12.93** .509	**6.00** .236	—	487953-5
6	**5.00** .197	**7.30** .288	**13.92** .548	**7.00** .276	**0.50** .020	487953-6
7	**6.00** .236	**8.30** .327	**14.91** .587	**8.00** .315	—	487953-7
8	**7.00** .276	**9.30** .367	**15.93** .627	**9.00** .354	**0.50** .020	487953-8
9	**8.00** .315	**10.30** .406	**16.92** .666	**10.00** .394	—	487953-9
10	**9.00** .354	**11.30** .445	**17.91** .705	**11.00** .433	**0.50** .020	1-487953-0
11	**10.00** .394	**12.30** .485	**18.92** .745	**12.00** .472	—	1-487953-1
12	**11.00** .433	**13.30** .525	**19.91** .784	**13.00** .512	**0.50** .020	1-487953-2
13	**12.00** .472	**14.30** .564	**20.93** .824	**14.00** .551	—	1-487953-3
14	**13.00** .512	**15.30** .603	**21.92** .863	**15.00** .591	**0.50** .020	1-487953-4
15	**14.00** .551	**16.30** .642	**22.91** .902	**16.00** .630	—	1-487953-5
16	**15.00** .591	**17.30** .682	**23.93** .942	**17.00** .669	**0.50** .020	1-487953-6
17	**16.00** .630	**18.30** .721	**24.92** .981	**18.00** .709	—	1-487953-7

No. of Positions	Dimensions A	B	C	D	E	Part Numbers
18	**17.00** .669	**19.30** .760	**25.91** 1.020	**19.00** .748	**0.50** .020	1-487953-8
19	**18.00** .709	**20.30** .800	**26.92** 1.060	**20.00** .787	—	1-487953-9
20	**19.00** .748	**21.30** .839	**27.91** 1.099	**21.00** .827	**0.50** .020	2-487953-0
21	**20.00** .787	**22.30** .879	**28.93** 1.139	**22.00** .866	—	2-487953-1
22	**21.00** .827	**23.30** .918	**29.92** 1.179	**23.00** .906	**0.50** .020	2-487953-2
23	**22.00** .866	**24.30** .957	**30.91** 1.217	**24.00** .945	—	2-487953-3
24	**23.00** .906	**25.30** .997	**31.93** 1.257	**25.00** .984	**0.50** .020	2-487953-4
25	**24.00** .945	**26.30** 1.036	**32.92** 1.296	**26.00** 1.024	—	2-487953-5
26	**25.00** .984	**27.30** 1.075	**33.91** 1.335	**27.00** 1.063	**0.50** .020	2-487953-6
27	**26.00** 1.024	**28.30** 1.115	**34.92** 1.375	**28.00** 1.102	—	2-487953-7
28	**27.00** 1.063	**29.30** 1.154	**35.92** 1.414	**29.00** 1.142	**0.50** .020	2-487953-8
29	**28.00** 1.102	**30.30** 1.194	**36.93** 1.454	**30.00** 1.181	—	2-487953-9
30	**29.00** 1.142	**31.30** 1.233	**37.92** 1.493	**31.00** 1.221	**0.50** .020	3-487953-0

For complete product information, order Catalog 82007

Products for Industrial & Commercial Applications

Dimensions are shown for reference purposes only.

Dimensions are in inches and millimeters unless otherwise specified. Values in brackets are metric equivalents.

Specifications subject to change.

Technical Support Center
1-800-522-6752
www.tycoelectronics.com

1.0 [.039] FPC Connectors

UPDATED 11/01

Top Contact Type

Material and Finish:

Housing—Thermoplastic, 94V-0 rated, beige

Slider—Thermoplastic, 94V-0 rated, black

Contact Finish—Phosphor bronze, plated 0.0038 [[.000150] min. tin-lead

Solder Tabs—Phosphor bronze, plated 0.00127 [.000050] min. tin-lead

Top Contact Type

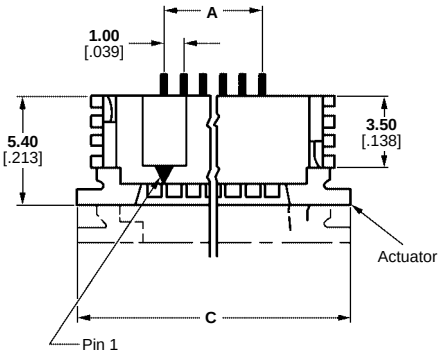

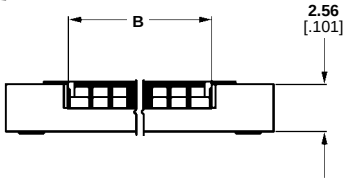

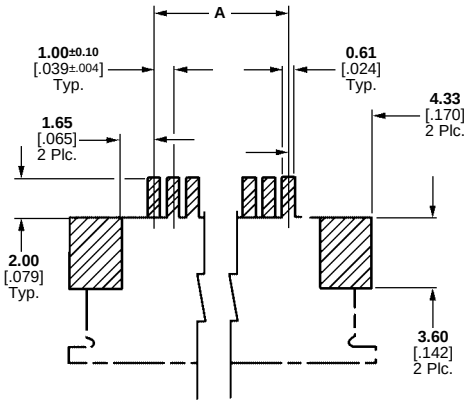

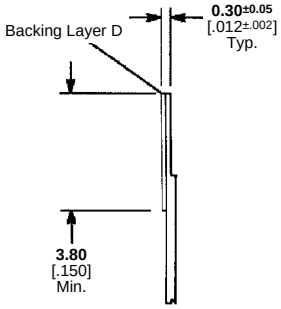

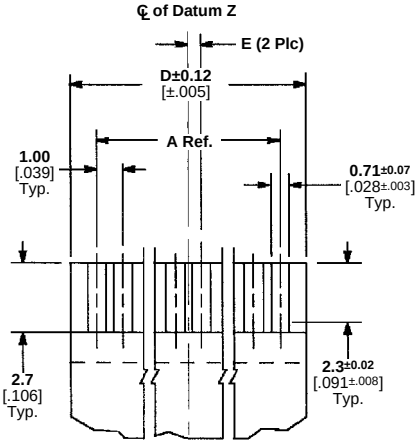

Recommended PC Board Pad Pattern

No. of Positions	Dimensions A	B	C	D	E	Part Numbers
4	**3.00** .118	**5.30** .209	**11.91** .469	**5.00** .197	**0.50** .020	487951-4
5	**4.00** .157	**6.30** .249	**12.93** .509	**6.00** .236	—	487951-5
6	**5.00** .197	**7.30** .288	**13.92** .548	**7.00** .276	**0.50** .020	487951-6
7	**6.00** .236	**8.30** .327	**14.91** .587	**8.00** .315	—	487951-7
8	**7.00** .276	**9.30** .367	**15.93** .627	**9.00** .354	**0.50** .020	487951-8
9	**8.00** .315	**10.30** .406	**16.92** .666	**10.00** .394	—	487951-9
10	**9.00** .354	**11.30** .445	**17.91** .705	**11.00** .433	**0.50** .020	1-487951-0
11	**10.00** .394	**12.30** .485	**18.92** .745	**12.00** .472	—	1-487951-1
12	**11.00** .433	**13.30** .525	**19.91** .784	**13.00** .512	**0.50** .020	1-487951-2
13	**12.00** .472	**14.30** .564	**20.93** .824	**14.00** .551	—	1-487951-3
14	**13.00** .512	**15.30** .603	**21.92** .863	**15.00** .591	**0.50** .020	1-487951-4
15	**14.00** .551	**16.30** .642	**22.91** .902	**16.00** .630	—	1-487951-5
16	**15.00** .591	**17.30** .682	**23.93** .942	**17.00** .669	**0.50** .020	1-487951-6
17	**16.00** .630	**18.30** .721	**24.92** .981	**18.00** .709	—	1-487951-7

No. of Positions	Dimensions A	B	C	D	E	Part Numbers
18	**17.00** .669	**19.30** .760	**25.91** 1.020	**19.00** .748	**0.50** .020	1-487951-8
19	**18.00** .709	**20.30** .800	**26.92** 1.060	**20.00** .787	—	1-487951-9
20	**19.00** .748	**21.30** .839	**27.91** 1.099	**21.00** .827	**0.50** .020	2-487951-0
21	**20.00** .787	**22.30** .879	**28.93** 1.139	**22.00** .866	—	2-487951-1
22	**21.00** .827	**23.30** .918	**29.92** 1.179	**23.00** .906	**0.50** .020	2-487951-2
23	**22.00** .866	**24.30** .957	**30.91** 1.217	**24.00** .945	—	2-487951-3
24	**23.00** .906	**25.30** .997	**31.93** 1.257	**25.00** .984	**0.50** .020	2-487951-4
25	**24.00** .945	**26.30** 1.036	**32.92** 1.296	**26.00** 1.024	—	2-487951-5
26	**25.00** .984	**27.30** 1.075	**33.91** 1.335	**27.00** 1.063	**0.50** .020	2-487951-6
27	**26.00** 1.024	**28.30** 1.115	**34.92** 1.375	**28.00** 1.102	—	2-487951-7
28	**27.00** 1.063	**29.30** 1.154	**35.92** 1.414	**29.00** 1.142	**0.50** .020	2-487951-8
29	**28.00** 1.102	**30.30** 1.194	**36.93** 1.454	**30.00** 1.181	—	2-487951-9
30	**29.00** 1.142	**31.30** 1.233	**37.92** 1.493	**31.00** 1.221	**0.50** .020	3-487951-0

1.0 [.039] FPC Connectors

UPDATED 11/01

Bottom Contact Type

Material and Finish:

Housing—Thermoplastic, 94V-0 rated, beige

Slider—Thermoplastic, 94V-0 rated, black

Contact Finish—Phosphor bronze, plated 0.0038 [[.000150] min. tin-lead

Solder Tabs—Phosphor bronze, plated 0.00127 [.000050] min. tin-lead

Bottom Contact Type

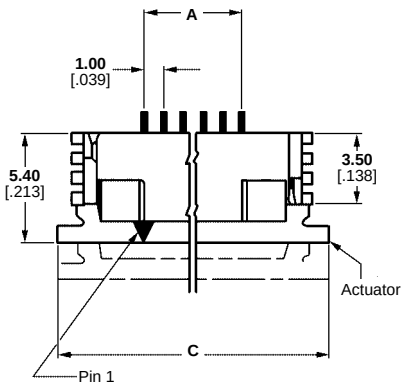

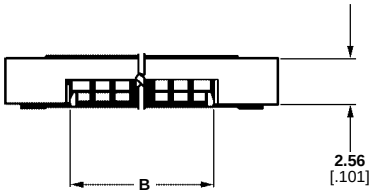

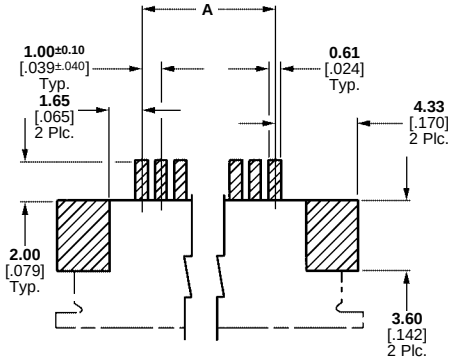

Recommended PC Board Pad Pattern

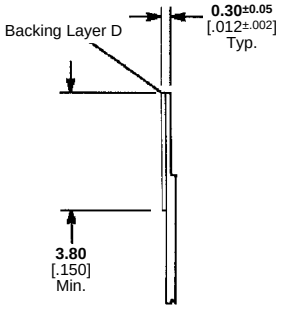

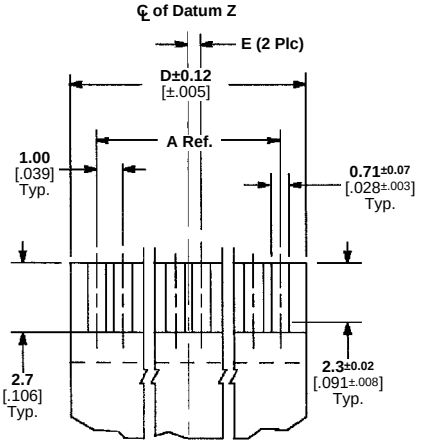

No. of Positions	Dimensions A	B	C	D	E	Part Numbers
4	**3.00** .118	**5.30** .209	**11.91** .469	**5.00** .197	**0.50** .020	487952-4
5	**4.00** .157	**6.30** .249	**12.93** .509	**6.00** .236	—	487952-5
6	**5.00** .197	**7.30** .288	**13.92** .548	**7.00** .276	**0.50** .020	487952-6
7	**6.00** .236	**8.30** .327	**14.91** .587	**8.00** .315	—	487952-7
8	**7.00** .276	**9.30** .367	**15.93** .627	**9.00** .354	**0.50** .020	487952-8
9	**8.00** .315	**10.30** .406	**16.92** .666	**10.00** .394	—	487952-9
10	**9.00** .354	**11.30** .445	**17.91** .705	**11.00** .433	**0.50** .020	1-487952-0
11	**10.00** .394	**12.30** .485	**18.92** .745	**12.00** .472	—	1-487952-1
12	**11.00** .433	**13.30** .525	**19.91** .784	**13.00** .512	**0.50** .020	1-487952-2
13	**12.00** .472	**14.30** .564	**20.93** .824	**14.00** .551	—	1-487952-3
14	**13.00** .512	**15.30** .603	**21.92** .863	**15.00** .591	**0.50** .020	1-487952-4
15	**14.00** .551	**16.30** .642	**22.91** .902	**16.00** .630	—	1-487952-5
16	**15.00** .591	**17.30** .682	**23.93** .942	**17.00** .669	**0.50** .020	1-487952-6
17	**16.00** .630	**18.30** .721	**24.92** .981	**18.00** .709	—	1-487952-7

No. of Positions	Dimensions A	B	C	D	E	Part Numbers
18	**17.00** .669	**19.30** .760	**25.91** 1.020	**19.00** .748	**0.50** .020	1-487952-8
19	**18.00** .709	**20.30** .800	**26.92** 1.060	**20.00** .787	—	1-487952-9
20	**19.00** .748	**21.30** .839	**27.91** 1.099	**21.00** .827	**0.50** .020	2-487952-0
21	**20.00** .787	**22.30** .879	**28.93** 1.139	**22.00** .866	—	2-487952-1
22	**21.00** .827	**23.30** .918	**29.92** 1.179	**23.00** .906	**0.50** .020	2-487952-2
23	**22.00** .866	**24.30** .957	**30.91** 1.217	**24.00** .945	—	2-487952-3
24	**23.00** .906	**25.30** .997	**31.93** 1.257	**25.00** .984	**0.50** .020	2-487952-4
25	**24.00** .945	**26.30** 1.036	**32.92** 1.296	**26.00** 1.024	—	2-487952-5
26	**25.00** .984	**27.30** 1.075	**33.91** 1.335	**27.00** 1.063	**0.50** .020	2-487952-6
27	**26.00** 1.024	**28.30** 1.115	**34.92** 1.375	**28.00** 1.102	—	2-487952-7
28	**27.00** 1.063	**29.30** 1.154	**35.92** 1.414	**29.00** 1.142	**0.50** .020	2-487952-8
29	**28.00** 1.102	**30.30** 1.194	**36.93** 1.454	**30.00** 1.181	—	2-487952-9
30	**29.00** 1.142	**31.30** 1.233	**37.92** 1.493	**31.00** 1.221	**0.50** .020	3-487952-0

For complete product information, order Catalog 82007

Products for Industrial & Commercial Applications

Dimensions are shown for reference purposes only.

Dimensions are in inches and millimeters unless otherwise specified. Values in brackets are metric equivalents.

Specifications subject to change.

Technical Support Center
1-800-522-6752
www.tycoelectronics.com

Application Tooling for Flexible Film Contacts

Hand Crimping Tool Assemblies



Part Number 90273-5—for Multi-Crimp (408-9564)

Extraction Tools

Tool No. 91200-□*—for Receptacle Housings with **Side Locking Lance Slot** (408-7916)

Tool No. 91047-□*—for Receptacle and Pin Housings with **End Locking Lance Slot** (408-7384)

*Consult Tyco Electronics for specific dash nos.

For tooling information, contact the Technical Support Center:
1-800-522-6752.

The flexible film semiautomatic bench machine for terminating .050 [1.27] and .100 [2.54] centerline flexible flat conductor cable (FFC), flexible etched circuitry (FEC), and flexible printed wiring (FPW) with AMP FFC reel-mounted contacts. For each cable or circuitry, the contacts are automatically applied one-at-a-time in a straight sequence. To skip positions, an optional programmer control box is available. Crimp height is easily adjustable in .0002 [.0051] increments. Termination rates up to 200 contacts per minute.

Specifications:

Width—20.5 [520]
Depth—27.5 [700]
Height—18 [460] (with reel support)
Reel Size—24 [610] (max.)
Weight—100 lb. [45.4 kg]
Electrical Source—
120 VAC, 50/60 Hz, 7.0 A;
240 VAC, 50/60 Hz, 3.5 A

Flexible Film Termination Machine (Terminates Continuous Strip Contacts Sequentially)

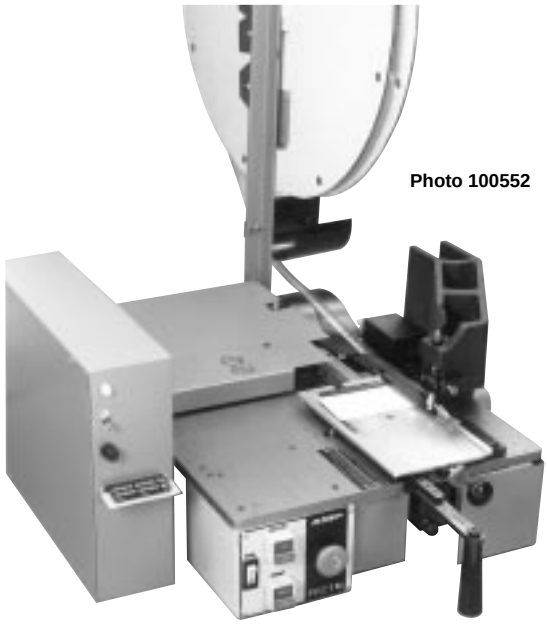

Photo 100552

Description	Machine Part Numbers	
	Machine	Machine With Programmer*
.100 [2.54] ℄, Multi-Crimp, 120 V	224910-1	318619-1
.100 [2.54] ℄, Multi-Crimp, 240 V	224910-2	318619-2
.100 [2.54] ℄, ARINC, 120 V	224910-3	318619-3
.050 [1.27] ℄, Multi-Crimp, 120 V	224910-4	318619-4
.050 [1.27] ℄, Multi-Crimp, 240 V	224910-6	318619-6

*The Programmer Kit (**Part Number** 356484-1) may be purchased with a new machine, or separately for adding onto an existing machine.

Technical Documents

Customer Manuals
409-5835 (Part Numbers 224910 and 318619)
409-5880 Programmer Kit (Part Number 356484-1)



FFC Contact Positioning Hand Tool Kit
Part Number 91292-1

Instruction Sheet 408-9719

This tool is designed to bend FFC solder tabs on .100 [2.54] or .050 [1.27] centerline cable. The hand tool kit consists of a hand tool, three upper tool dies, one lower insert and a bench clamp.

Hand Tool
Part Number 91292-2

90° Staggered Tooling
Part Number 543470-1

90° Straight Tooling
Part Number 543479-1

90° Staggered Straight (Z Bend Tooling)
Part Number 543471-1 (upper) **and** 543472-1 (lower)

Each upper tool die is used for one of three bending configurations, which include: 90° staggered, straight 90° and 90° staggered straight (Z bend). The lower insert is used only for the Z bend configuration.

The bench clamp enables the operator to use the hand tool mounted on an appropriate work bench.

For complete product information, order Catalog 82007

Products for Industrial & Commercial Applications
Dimensions are shown for reference purposes only.
Dimensions are in inches and millimeters unless otherwise specified. Values in brackets are metric equivalents.
Specifications subject to change.
Technical Support Center
1-800-522-6752
www.tycoelectronics.com

Engineering Notes

Table of Contents

DIP Sockets
Solder Tail Dual Leaf (DL) Contact 5002-5007
Four-Fingered Contact (500 Series, 700 Series, 800 Series).....5008-5014
Surface Mount (800 SM Series) 5014, 5015
DIP Insertion and Withdrawal Tools (TI/TW Series, TX Series) 5016, 5017

SIP Sockets
Solder Tail Dual Leaf (DL) Contact.....5018, 5019
Terminal Strips, Four-Fingered Contact (500 Series).....5020

SIMM Sockets
SIMM MICRO-EDGE Sockets 5021-5023
SIMM II Right-Angle Sockets 5024, 5025

DIMM Sockets
SO DIMM Sockets.....5026, 5027
DIMM II Sockets 5028-5031
DIMM IIP (Performance) Sockets 5032

PLCC Sockets
Surface Mount.....5033-5035
Thru-Hole (PCS Series) 5036, 5037
Thru-Hole Economy 5038

PQFP Sockets
Standard 5039, 5040
Metric 5041, 5042

Discrete Sockets
HOLTITE Series Press-fit Sockets, Zero Profile 5043-5047

Adapters
Plug Adapter Assemblies (600 Series) 5048-5050
Transistor Adapter Plugs (600-AG Series) 5051, 5052

Display Sockets
Numerical Display Sockets (500 Series) 5053
Angle Mount DIP Sockets (500 Series) 5054
Ganged DIP Sockets (500 Series).....5055

Specialty Sockets
Crystal Socket Assemblies (800-AG & 8004-1G Series).....5056-5060
Programming Jumper Plug Assemblies
(8136-875 Series, 8136-475 Series) 5061, 5062
Fuse Sockets (500 Series) 5063
Crystal Oscillator Sockets (500 Series) 5064
Transistor & IC Low Profile Sockets (8059 Series) 5065, 5066
Transistor Sockets (8058 & 8060 Series) 5067-5070
Lamp Sockets (8060 Series) 5071, 5072
TO-3 Transistor Sockets (8080-1G Series) 5073, 5074
Push Fit Test Jacks (8000 Series) 5075, 5076
Printed Circuit Test Jacks (8041 Series, 8041 Series Commercial) 5077, 5078
Micro-Miniature Test Jacks (8046 Series Commercial) 5079, 5080

Products for Industrial & Commercial Applications
Dimensions are shown for reference purposes only.
Dimensions are in inches and millimeters unless otherwise specified. Values in brackets are metric equivalents.
Specifications subject to change.
Technical Support Center
1-800-522-6752
www.tycoelectronics.com

Solder Tail Dual Leaf (DL) Contact

Product Facts

- **Dual wiping contacts**
- **Face wipe contacts for high reliability and constant, low resistance**
- **Anti-overstress prevents contact damage**
- **Large target area with tapered lead-in ramps for easy DIP insertion**
- **Stackable end-to-end and side-to-side (brickwalling) for high board density**
- **Housing standoffs and slots facilitate board cleaning**
- **Family of 6 through 48 positions**
- **Retention-style tails or straight solder tails**
- **Visual polarization**
- **Designed for automatic machine insertion — DIP-to-socket or socket-to-board (tube loaded)**
- **Recognized under the Component Program of Underwriters Laboratories Inc.,**
- **Certified by Canadian Standards Association**

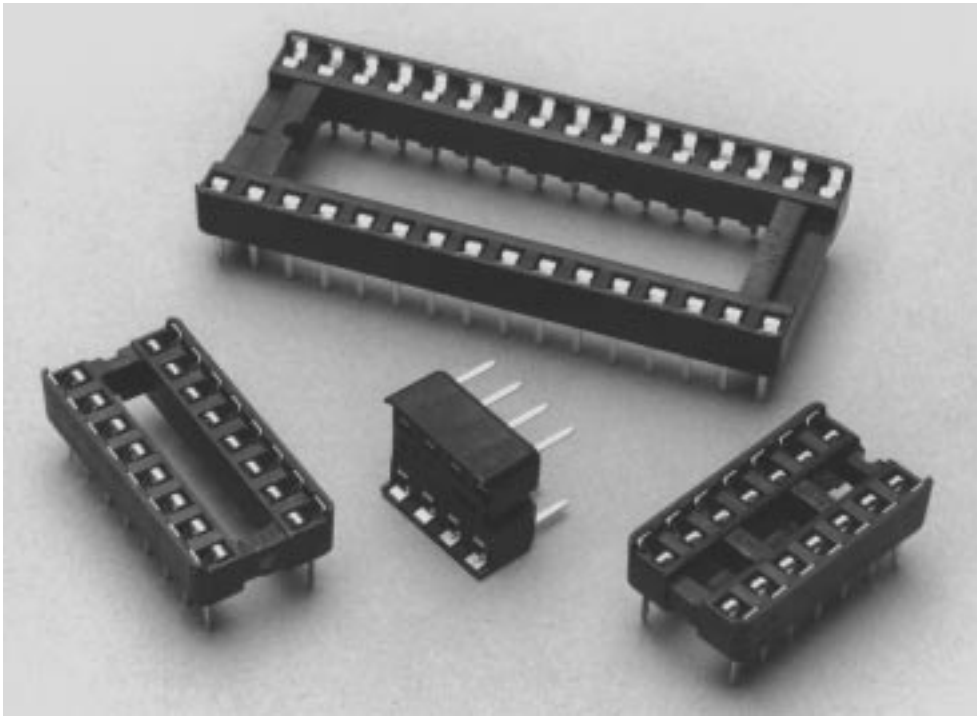

The Dual Leaf (DL) DIP socket family provides high quality at low cost with superior handling characteristics. Sockets are available in 6- through 48-position sizes with dual wiping contacts. The large target area of the contacts and tapered side ramps in the housing promote easy entry of a DIP package. Internal anti-overstress walls on standard versions prevent contact damage. The housings are compatible with commercially available automatic insertion equipment for socket-to-board or DIP-to-socket applications.

Standoffs provide board clearance for proper cleaning after soldering. Sockets are available with straight solder tails for clinching and are “true positioned” for automatic insertion into the pc board.

Performance Characteristics:

Rating — Signal application only

Contact Resistance — 20 milliohms max. (initial)
30 milliohms max. (after test)

Dielectric Withstanding Voltage — 1000 VRMS min.

Insulation Resistance — 10,000 megohms min. (initial)

Capacitance — 0.5 picofarad max.

Operating Temperature —
-40°C to +105°C (tin)
-55°C to +125°C (gold)

Vibration — 15 Gs, 10-2000 Hz with 100 ma current

Shock — 100 Gs sawtooth, 6 shocks

Engaging Force — 340 grams max. (initial)

Separating Force — 25 grams min. per Tyco Electronics Specification 108-1066 (Standard)

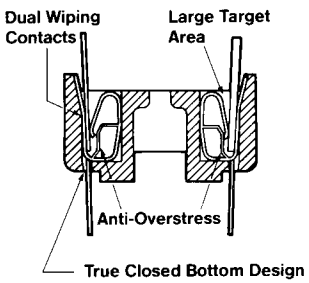

Products for Industrial & Commercial Applications

Dimensions are shown for reference purposes only.

Dimensions are in inches and millimeters unless otherwise specified. Values in brackets are metric equivalents.

Specifications subject to change.

Technical Support Center
1-800-522-6752
www.tycoelectronics.com

Dual Leaf (DL)

Sockets accept .008—.014 [0.2—0.36] thick IC leads

Material and Finish:

Housing — Glass-filled thermoplastic, 94V-0 rated, black

Contacts — Phosphor bronze or beryllium copper with tin or gold plating (see table)

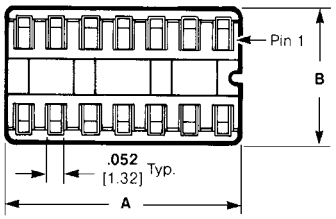

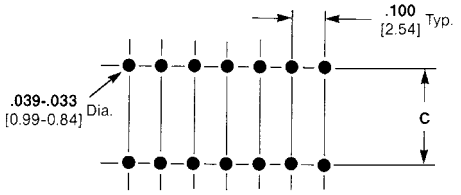

Recommended Mounting Dimensions



Note: All socket positions have "True Closed Bottom" design which allows no solder or flux wicking at class 1 conditions of EIA 486.

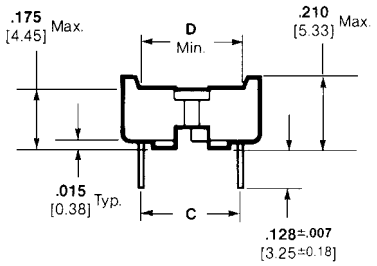

Sockets with Straight Solder Tails

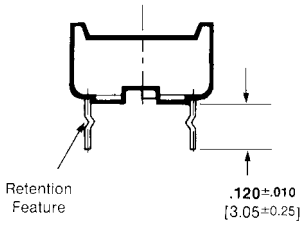

Sockets with Retention Feature Solder Tails

No. of Positions	Dimensions A	B	C	D	Sockets with Straight Solder Tails[1] Beryllium Copper .000030 [0.00076][2] Gold Plate	Sockets with Straight Solder Tails[1] Phosphor Bronze .000015 [0.00038][2] Gold Plate	Sockets with Retention Solder Tails[1] Beryllium Copper Tinned	Beryllium Copper .000030 [0.00076][2] Gold Plate	Phosphor Bronze Tinned	Phosphor Bronze 000015 [0.00038][2] Gold Plate
6[3]	**.295** 7.49	**.394** 10.01	**.300** 7.62	**.320** 8.13	2-641296-2	2-641296-4	—	—	—	—
8[3]	**.395** 10.03	**.394** 10.01	**.300** 7.62	**.320** 8.13	2-640463-2	2-640463-4	2-641260-1	—	—	2-641260-4
14	**.695** 17.65	**.394** 10.01	**.300** 7.62	**.320** 8.13	2-641599-2	2-641599-4	2-641609-1	—	—	2-641609-4
16	**.795** 20.19	**.394** 10.01	**.300** 7.62	**.320** 8.13	2-641600-2	2-641600-4	2-641610-1	2-641610-2	—	2-641610-4
18	**.895** 22.73	**.394** 10.01	**.300** 7.62	**.320** 8.13	—	—	2-641611-1	—	—	—
20	**.995** 25.27	**.394** 10.01	**.300** 7.62	**.320** 8.13	2-641602-2	2-641602-4	2-641612-1	2-641612-2	—	2-641612-4
24	**1.195** 30.35	**.394** 10.01	**.300** 7.62	**.320** 8.13	2-641932-2	2-641932-4	2-641933-1	—	—	—
24	**1.195** 30.35	**.694** 17.63	**.600** 15.24	**.620** 15.75	2-641604-2	2-641604-4	641855-1	—	—	2-641614-4
28	**1.395** 35.43	**.694** 17.63	**.600** 15.24	**.620** 15.75	2-641605-2	2-641605-4	2-641615-1	2-641615-2	2-641615-3	2-641615-4
40	**1.995** 50.67	**.694** 17.63	**.600** 15.24	**.620** 15.75	2-641606-2	2-641606-4	2-641616-1	2-641616-2	—	—
42	**2.095** 53.21	**.694** 17.63	**.600** 15.24	**.620** 15.75	2-382374-2	—	—	—	—	—
48	**2.395** 60.83	**.694** 17.63	**.600** 15.24	**.620** 15.75	—	—	—	2-643576-2	—	2-643574-4

[1] ONLY sockets with straight solder tails are recommended for automatic insertion. All parts are packaged in plastic tubes. Sockets with retention feature are packaged in plastic tubes for handling and storage convenience only.
[2] Gold thickness in contact area; tin-lead plate on solder tails.
[3] Closed frame design.

Products for Industrial & Commercial Applications
Dimensions are shown for reference purposes only.
Dimensions are in inches and millimeters unless otherwise specified. Values in brackets are metric equivalents.
Specifications subject to change.
Technical Support Center 1-800-522-6752 www.tycoelectronics.com

Dual Leaf (DL)

Sockets accept .008—.014 [0.2—0.36] thick IC leads

Material and Finish:

Housing — Glass-filled thermoplastic, 94V-0 rated, black

Contacts — Phosphor bronze or beryllium copper with tin or gold plating (see table)

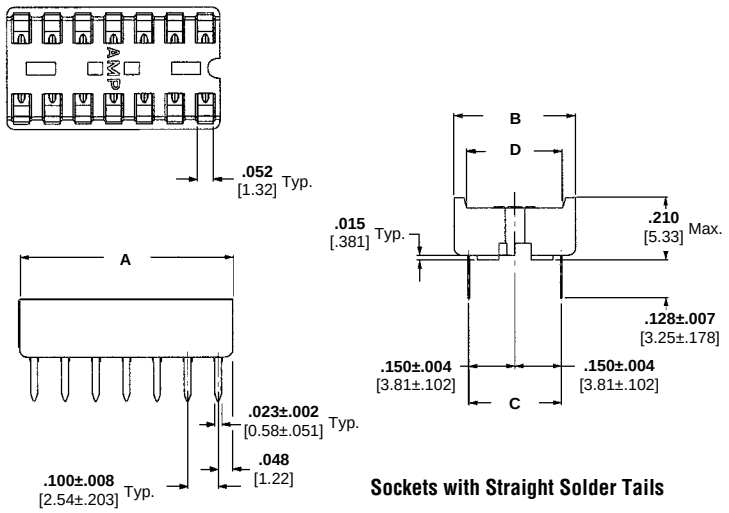

Sockets with Straight Solder Tails

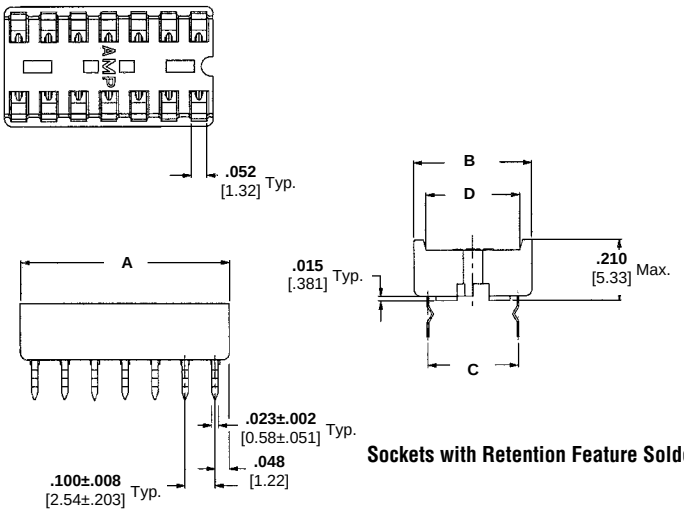

Sockets with Retention Feature Solder Tails

No. of Positions	Dimensions				Sockets with Straight Solder Tails[1]		Sockets with Retention Solder Tails[1]		
					Beryllium Copper	Phosphor Bronze	Beryllium Copper	Phosphor Bronze	
	A	B	C	D	.000030 [0.00076][2] Gold Plate	.000015 [0.00038][2] Gold Plate	Tinned	Tinned	.000015 [.00038][2] Gold Plate
14	**.695** 17.65	**.394** 10.01	**.300** 7.62	**.320** 8.13	—	2-640357-4	2-641261-1	—	—
16	**.795** 20.19	**.394** 10.01	**.300** 7.62	**.320** 8.13	2-640358-2	2-640358-4	2-641262-1	—	2-641262-4
18	**.895** 22.73	**.394** 10.01	**.300** 7.62	**.320** 8.13	—	2-640359-4	—	—	—
20	**.995** 25.27	**.394** 10.01	**.300** 7.62	**.321** 8.13	2-640464-2	2-640464-4	2-641264-1	—	2-641264-4
24	**1.195** 30.35	**.694** 17.63	**.600** 15.24	**.620** 15.75	2-640361-2	2-640361-4	2-641266-1	—	—
28	**1.395** 35.43	**.694** 17.63	**.600** 15.24	**.620** 15.75	2-640362-2	2-640362-4	2-641267-1	2-641267-3	2-641267-4
40	**1.995** 50.67	**.694** 17.63	**.600** 15.24	**.620** 15.75	2-640379-2	2-640379-4	2-641268-1	—	2-641268-4

[1] ONLY sockets with straight solder tails are recommended for automatic insertion. All parts are packaged in plastic tubes. Sockets with retention feature are packaged in plastic tubes for handling and storage convenience only.
[2] Gold thickness in contact area; tin-lead plate on solder tails.

Products for Industrial & Commercial Applications
Dimensions are shown for reference purposes only.
Dimensions are in inches and millimeters unless otherwise specified. Values in brackets are metric equivalents.
Specifications subject to change.
Technical Support Center
1-800-522-6752
www.tycoelectronics.com

Open Frame

Material and Finish:

Housing — Glass-filled thermoplastic

Contacts — Beryllium copper

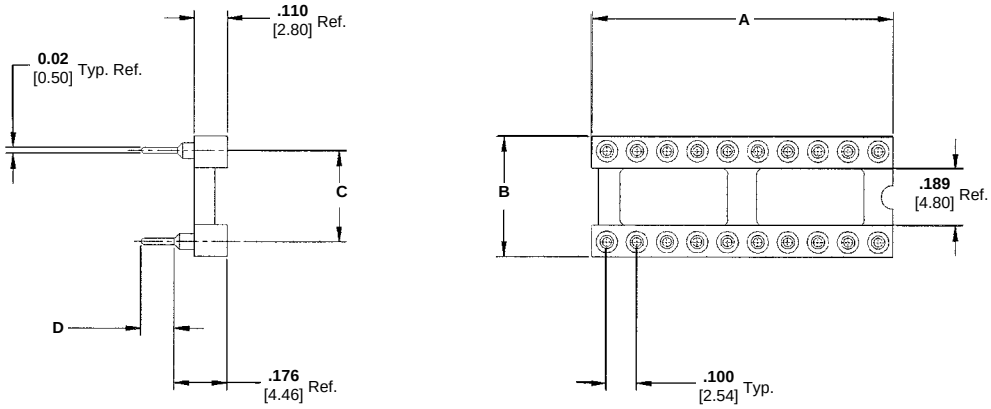

No. of Positions	Type/ Centerline	Dimensions A	B	C	D	Part Numbers
20	.300	**.996** 25.3	**.394** 10.1	**.300** 7.62	**.112** 2.84	345721-4
20	Wire Wrap Tail .300	**.996** 25.3	**.394** 10.1	**.300** 7.62	**0.51** 12.95	3-345848-5
24	Wire Wrap Tail .300	**1.20** 30.4	**.394** 10.1	**.300** 7.62	**0.51** 12.95	3-345850-5
28	Auto Insertable .600	**1.40** 35.5	**.694** 17.7	**.600** 15.24	**.114** 2.90	345870-4
32	.600	**1.60** 40.6	**.694** 17.7	**.600** 15.24	**.112** 2.84	345729-1

Economy Ladder Style, .300 Centerline

Material and Finish:

Housing — Glass-filled thermoplastic, black

Contacts — Phosphor bronze with tin plating

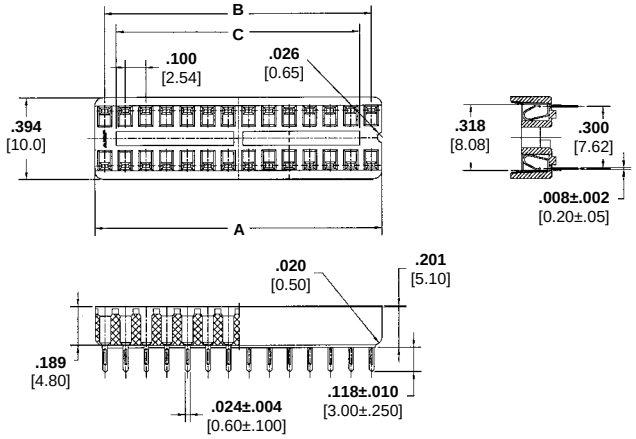

No. of Positions	Dimensions A	B	C	Part Numbers .300 Centerline
6	**7.62** .300	**5.08** .200	**2.10** .083	390261-1
8	**10.16** .400	**7.62** .300	**4.76** .187	390261-2
14	**17.78** .700	**15.24** .600	**12.38** .487	390261-3
16	**20.32** .800	**17.78** .700	**14.92** .587	390261-4
18	**22.86** .900	**20.32** .800	**17.46** .687	390261-5
20	**25.40** 1.400	**22.86** .900	**20.00** .787	390261-6
22	**27.94** 1.100	**25.40** 1.000	**22.54** .887	390261-7
24	**30.48** 1.200	**27.94** 1.100	**25.10** .988	390261-8
28	**35.56** 1.400	**33.02** 1.300	**30.12** 1.185	390261-9
32	**40.64** 1.600	**38.10** 1.500	**35.20** 1.386	1-390261-0

Products for Industrial & Commercial Applications

Dimensions are shown for reference purposes only.

Dimensions are in inches and millimeters unless otherwise specified. Values in brackets are metric equivalents.

Specifications subject to change.

Technical Support Center
1-800-522-6752
www.tycoelectronics.com

Economy Ladder Style, .600 Centerline

Material and Finish:

Housing — Glass-filled Thermoplastic, black

Contacts — Phosphor bronze with tin plating

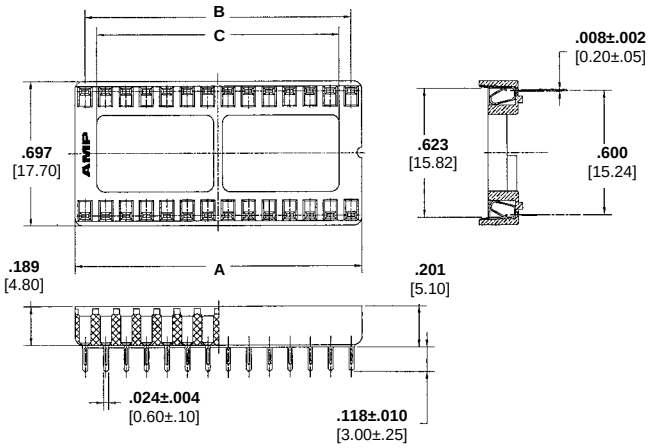

No. of Positions	Dimensions			Part Numbers
	A	B	C	.600 Centerline
24	**30.48** 1.200	**27.94** 1.100	**25.10** .988	390262-1
28	**35.56** 1.400	**33.02** 1.300	**30.12** 1.185	390262-2
32	**40.64** 1.600	**38.10** 1.500	**35.20** 1.386	390262-3
40	**50.80** 2.000	**48.26** 1.900	**45.36** 1.790	390262-5
42	**53.34** 2.100	**50.08** 1.970	**47.90** 1.890	390262-6
48	**60.96** 2.400	**58.42** 2.300	**55.52** 2.190	390262-7

Economy Over-the-Component (OTC) Style, 15.24 Centerline

Material and Finish:

Housing — Glass-filled Thermoplastic, black

Contacts — Phosphor bronze with tin plating

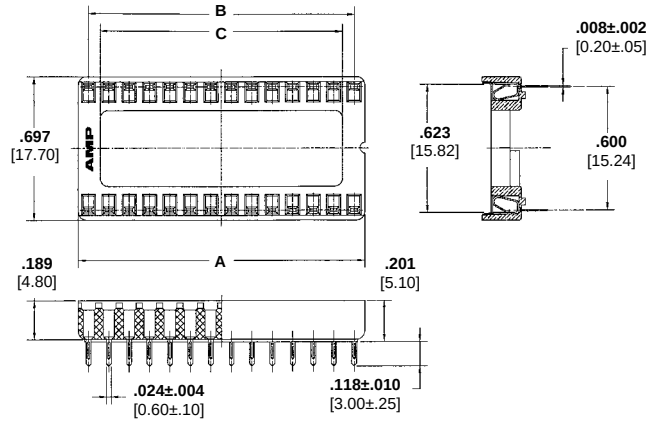

No. of Positions	Dimensions			Part Numbers
	A	B	C	15.24 Centerline
24	**25.10** .988	**27.94** 1.100	**30.48** 1.200	390263-7
28	**30.12** 1.190	**33.02** 1.300	**35.56** 1.400	390263-1
32	**35.20** 1.390	**38.10** 1.500	**40.64** 1.600	390263-2
40	**45.36** 1.790	**48.26** 1.900	**50.80** 2.000	390263-4
42	**47.90** 1.890	**50.08** 1.970	**53.34** 2.100	390263-5
48	**55.52** 2.190	**58.42** 2.300	**60.96** 2.400	390263-6

Products for Industrial & Commercial Applications

Dimensions are shown for reference purposes only.

Dimensions are in inches and millimeters unless otherwise specified. Values in brackets are metric equivalents.

Specifications subject to change.

Technical Support Center
1-800-522-6752
www.tycoelectronics.com

Dual Leaf (DL), Over-the-Component (OTC) Style

Sockets accept .008—.014 [0.2—0.36] thick IC leads

Material and Finish:

Housing — Glass-filled thermoplastic, 94V-0 rated, black

Contacts — Phosphor bronze or beryllium copper with gold plating (see table)

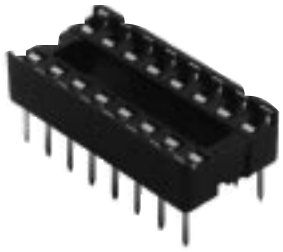

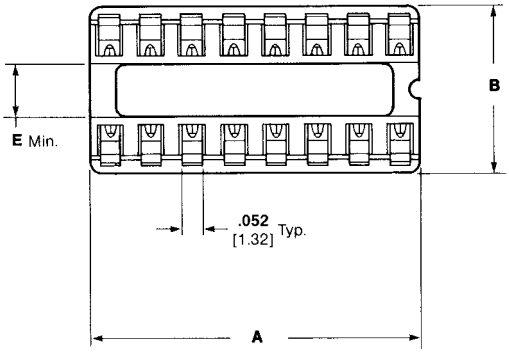

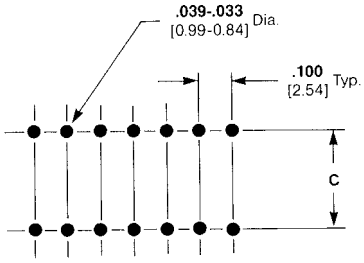

Recommended Mounting Dimensions

Recommended IC Leg Length:

1) .100 [2.54] min. for a reliable contact surface.

2) .120 [3.05] max. to allow IC body to seat on socket.

3) Longer legs may be used, but IC cannot be fully seated on seating plane.

Note: All socket positions have "True Closed Bottom" design which allows no solder or flux wicking at class 1 conditions of EIA 486.

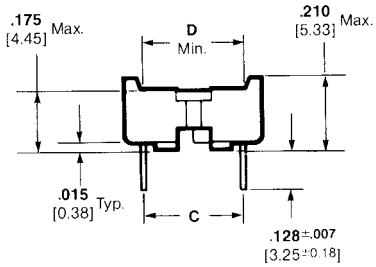

Sockets with Straight Solder Tails

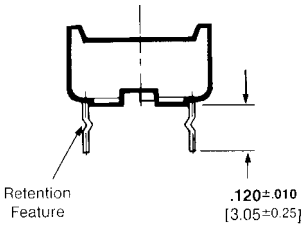

Sockets with Retention Feature Solder Tails

No. of Positions	Dimensions					Sockets with Straight Solder Tails		Sockets with Retention Solder Tails
						Beryllium Copper	Phosphor Bronze	Beryllium Copper
	A	B	C	D	E	.000030 [0.00076][1] Gold Plate	.000015 [0.00038][1] Gold Plate	.000030 [0.00076][1] Gold Plate
32	**1.595** 40.51	**.694** 17.63	**.600** 15.24	**.620** 15.75	**.380** 9.65	2-644018-2	2-644018-4	2-382189-2

[1] Gold thickness in contact area with tin-lead plate on solder tails. All parts packaged in plastic tubes.

Products for Industrial & Commercial Applications
Dimensions are shown for reference purposes only.
Dimensions are in inches and millimeters unless otherwise specified. Values in brackets are metric equivalents.
Specifications subject to change.
Technical Support Center 1-800-522-6752 www.tycoelectronics.com

Four-Fingered Contact & Solid Insulator

500 Series

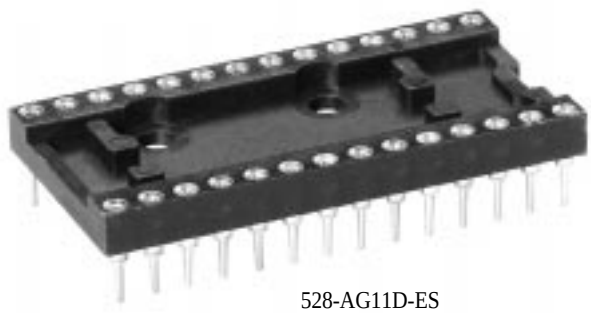

528-AG11D-ES

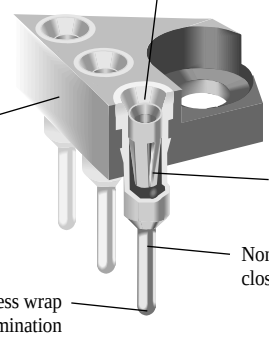

FEATURES:

The 500 Series Socket features a precision four-finger inner contact to produce the industry standard for high reliability screw machine sockets.

- Precision four-finger inner contact provides concentric funnel entry for easy flat and round lead insertion
- Machined (Premium Series) and stamped (Economy Series) contacts are available
- "X" & "Y" stackable
- Non-wicking, closed bottom sleeve gives 100% protection against flux and solder contamination. Choice of solderless wrap or PC termination
- Accommodates 6 through 40 pin DIPS, rectangular or round leads
- ®UL Recognized under the Component Program of Underwriters Laboratories, Inc. file no. E111362
- Beryllium copper inner contact for maximum mechanical and electrical performance
- For extreme conditions involving shock and vibration, The AMP high retention series is available

APPLICATION DIMENSIONS:

- PCB Thickness Range: Standard .062" and .092" (1,57 and 2,34)
- PCB Hole Size Range: .035" ± .002" (0,89 ± 0,05) PC tail, .055" ± .003" (1,40 ± 0,08) solderless wrap
- IC Pin Dimension Range: .009" x .015" (0,23 x 0,38) through .011" x .020" (0,28 x 0,51) .016" to .021" (0,41 to 0,53) round lead, .105" (2,67) min. length

MATERIAL SPECIFICATIONS:

Insulator.....Thermoplastic polyester, UL rated 94V-0
Sleeve .....Machined brass/formed copper
Contact .....Beryllium copper
Sleeve Plating .....Tin/lead or gold
Contact Plating .....Premium or Economy Series (ES) - gold or tin/lead
Economy Series (ESL) - low gold

PERFORMANCE SPECIFICATIONS:

MECHANICAL

Vibration .....Passed MIL-STD-1344, Method 2005.1, Condition II, 10 G's
Shock.....Passed MIL-STD-1344, Method 2004.1, Condition C, 100 G's
Durability .....Passed MIL-STD-1344, Method 2016
Normal Force .....125 Grams (4.4 oz.) average with .018" (0,46) dia. polished steel pin (Premium Series)
200 Grams (7.1 oz.) average with .018" (0,46) dia. polished steel pin (Economy Series)
Inner Contact Retention .. in Sleeve.....7.5 Lbs. per line average
Sleeve Retention in Plastic.....3.0 Lbs. per line minimum
Solderability .....Passed MIL-STD-202F, Method 208
Insertion Force .....Premium - 134 Grams (4.7 oz.) average with a .018" (0,46) dia. polished steel pin
Economy - 179 Grams (6.3 oz.) average with a .018" (0,46) dia. polished steel pin
Withdrawal Force .....63 Grams (2.2 oz.) average with a .018" (0,46) dia. polished steel pin
(Premium and Economy)

ELECTRICAL

Contact Resistance .....10 Milliohms max.
Contact Rating.....3 Amps
Capacitance .....1.0 pF per MIL-STD-202, Method 305 (contact to contact)
Insulation Resistance.....5,000 Megohms min. @ 500 VDC per MIL-STD-1344, Method 3003.1
Dielectric Withstanding Voltage .....1,000 Volts RMS per MIL-STD-1344, Method 3001.1

ENVIRONMENTAL

Humidity .....Passed MIL-STD-1344, Method 1002.2, Cond. II
Thermal Shock .....Passed MIL-STD-1344, Method 1003.1, Cond. A
Operation Temperature ....Gold inner contact -55°C to +125°C, Tin/lead inner contact -55°C to +105°C

Products for Industrial & Commercial Applications
Dimensions are shown for reference purposes only.
Dimensions are in inches and millimeters unless otherwise specified. Values in brackets are metric equivalents.
Specifications subject to change.
Technical Support Center 1-800-522-6752 www.tycoelectronics.com

Four-Fingered Contact & Solid Insulator

500 Series

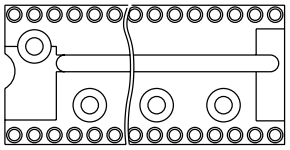

Figure 2

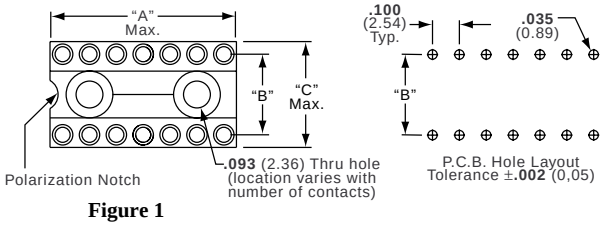

Figure 1

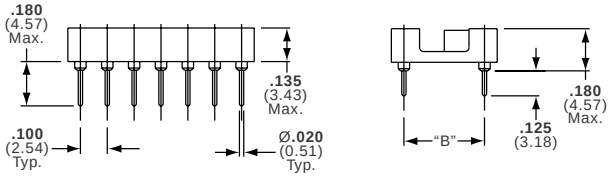

STANDARD CONFIGURATIONS

Number of Contacts	A	B*	C	Number of Contacts	A	B*	C
6	.300 (7,62)	.300 (7,62)	.400 (10,16)	24	1.200 (30,48)	.400 (10,16)	.500 (12,70)
8	.400 (10,16)			24	1.200 (30,48)	.600 (15,24)	.700 (45,72)
14	.700 (17,78)			28	1.400 (35,56)		
16	.800 (20,32)			32	1.600 (40,64)		
18	.900 (22,86)			36	1.800 (47,72)		
20	1.000 (25,40)			40	2.000 (50,80)		
22	1.150 (29,21)	.400 (10,16)	.500 (12,70)				

* Dimension **B** ± .005 (0,13)

PART NUMBERS

Economy Series	Premium	Figure	Position	Centerline	Contact	Sleeve
506-AG10D-ES	506-AG10D		6		Gold	Gold
506-AG10D-ESL			6		Low Gold	Gold
506-AG11D-ES	506-AG11D	1	6	.300 (7,62)	Gold	Tin/Lead
506-AG11D-ESL			6		Low Gold	Tin/Lead
506-AG12D-ES	506-AG12D		6		Tin/Lead	Tin/Lead
508-AG10D-ES	508-AG10D		8		Gold	Gold
508-AG10D-ESL			8		Low Gold	Gold
508-AG11D-ES	508-AG11D	1	8	.300 (7,62)	Gold	Tin/Lead
508-AG11D-ESL			8		Low Gold	Tin/Lead
508-AG12D-ES	508-AG12D		8		Tin/Lead	Tin/Lead
514-AG10D-ES	514-AG10D		14		Gold	Gold
514-AG10D-ESL			14		Low Gold	Gold
514-AG11D-ES	514-AG11D	1	14	.300 (7,62)	Gold	Tin/Lead
514-AG11D-ESL			14		Low Gold	Tin/Lead
514-AG12D-ES	514-AG12D		14		Tin/Lead	Tin/Lead
516-AG10D-ES	516-AG10D		16		Gold	Gold
516-AG10D-ESL			16		Low Gold	Gold
516-AG11D-ES	516-AG11D	1	16	.300 (7,62)	Gold	Tin/Lead
516-AG11D-ESL			16		Low Gold	Tin/Lead
516-AG12D-ES	516-AG12D		16		Tin/Lead	Tin/Lead
518-AG10D-ES	518-AG10D		18		Gold	Gold
518-AG10D-ESL			18		Low Gold	Gold
518-AG11D-ES	518-AG11D	1	18	.300 (7,62)	Gold	Tin/Lead
518-AG11D-ESL			18		Low Gold	Tin/Lead
518-AG12D-ES	518-AG12D		18		Tin/Lead	Tin/Lead
520-AG10D-ES	520-AG10D		20		Gold	Gold
520-AG10D-ESL			20		Low Gold	Gold
520-AG11D-ES	520-AG11D	1	20	.300 (7,62)	Gold	Tin/Lead
520-AG11D-ESL			20		Low Gold	Tin/Lead
520-AG12D-ES	520-AG12D		20		Tin/Lead	Tin/Lead
522-AG10D-ES	522-AG10D		22		Gold	Gold
522-AG10D-ESL			22		Low Gold	Gold
522-AG11D-ES	522-AG11D	1	22	.400 (10,16)	Gold	Tin/Lead
522-AG11D-ESL			22		Low Gold	Tin/Lead
522-AG12D-ES	522-AG12D		22		Tin/Lead	Tin/Lead

Economy Series	Premium	Figure	Position	Centerline	Contact	Sleeve
524-AG65D-ES	524-AG65D		24		Gold	Gold
524-AG65D-ESL			24		Low Gold	Gold
524-AG66D-ES	524-AG66D	2	24	.400 (10,16)	Gold	Tin/Lead
524-AG66D-ESL			24		Low Gold	Tin/Lead
524-AG13D-ES	524-AG13D		24		Tin/Lead	Tin/Lead
524-AG10D-ES	524-AG10D		24		Gold	Gold
524-AG10D-ESL			24		Low Gold	Gold
524-AG11D-ES	524-AG11D	2	24	.600 (15,24)	Gold	Tin/Lead
524-AG11D-ESL			24		Low Gold	Tin/Lead
524-AG12D-ES	524-AG12D		24		Tin/Lead	Tin/Lead
528-AG10D-ES	528-AG10D		28		Gold	Gold
528-AG10D-ESL			28		Low Gold	Gold
528-AG11D-ES	528-AG11D	2	28	.600 (15,24)	Gold	Tin/Lead
528-AG11D-ESL			28		Low Gold	Tin/Lead
528-AG12D-ES	528-AG12D		28		Tin/Lead	Tin/Lead
532-AG10D-ES	532-AG10D		32		Gold	Gold
532-AG10D-ESL			32		Low Gold	Gold
532-AG11D-ES	532-AG11D	2	32	.600 (15,24)	Gold	Tin/Lead
532-AG11D-ESL			32		Low Gold	Tin/Lead
532-AG12D-ES	532-AG12D		32		Tin/Lead	Tin/Lead
536-AG10D-ES	536-AG10D		36		Gold	Gold
536-AG10D-ESL			36		Low Gold	Gold
536-AG11D-ES	536-AG11D	2	36	.600 (15,24)	Gold	Tin/Lead
536-AG11D-ESL			36		Low Gold	Tin/Lead
536-AG12D-ES	536-AG12D		36		Tin/Lead	Tin/Lead
540-AG10D-ES	540-AG10D		40		Gold	Gold
540-AG10D-ESL			40		Low Gold	Gold
540-AG11D-ES	540-AG11D	2	40	.600 (15,24)	Gold	Tin/Lead
540-AG11D-ESL			40		Low Gold	Tin/Lead
540-AG12D-ES	540-AG12D		40		Tin/Lead	Tin/Lead

Note: Part numbers in this chart and in detail shown refer to a .125" PC Tail Pin

ECONOMY AND PREMIUM SERIES - .180" PC TAIL PINS

5XX-AG44D-XXX - Gold contact, tin/lead sleeve
5XX-AG45D-XXX - Gold contact, gold sleeve
5XX-AG143D-XXX - Tin/lead contact, tin/lead sleeve

HIGH RETENTION SERIES

5XX-AG34D - Gold contact, tin/lead sleeve
5XX-AG33D - Gold contact, gold sleeve
5XX-AG38D - Tin/lead contact, tin/lead sleeve

Note: Before ordering, see Cross Reference in Section 15 for equivalent Tyco Electronics Part Number.

For wire wrap sockets or 24 position on .400" (10,16) in high retention or .180 (4,57) tails, please consult Tyco Electronics.

Products for Industrial & Commercial Applications
Dimensions are shown for reference purposes only.
Dimensions are in inches and millimeters unless otherwise specified. Values in brackets are metric equivalents.
Specifications subject to change.
Technical Support Center
1-800-522-6752
www.tycoelectronics.com

Four-Fingered Contacts Disposable Carriers

700 Series

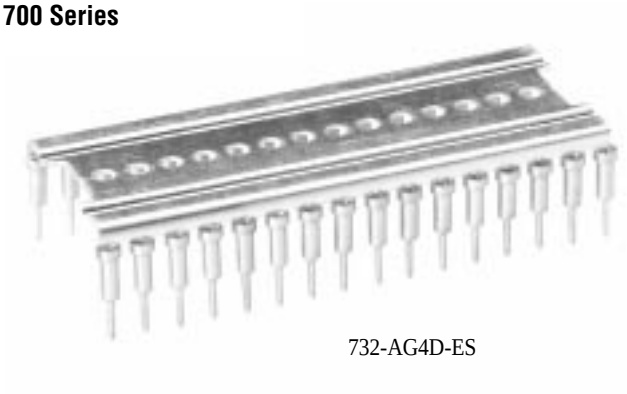

732-AG4D-ES

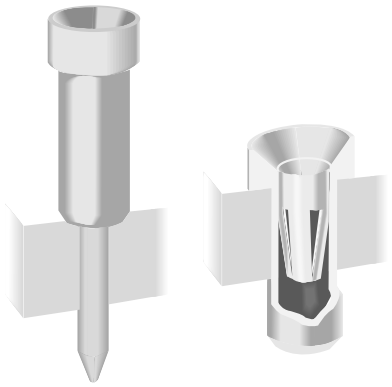

FEATURES:

A disposable aluminum carrier forms the backbone of the 700 Series socket, an innovative extension of the AMP precision four-fingered, inner contact concept. Conceived for IC applications requiring maximum air flow for cooling, the 700 Series eliminates heat entrapment associated with an insulator. Additional benefits are:

- Easy solder joint inspection-easy cleaning-easy repair
- "X" & "Y" stackability for circuit flexibility and optimum use of PCB real estate
- Gang insertion of socket pins into PC boards
- 100% non-wicking of flux and solder
- Standard or low profile PC board mounting
- Availability in 6 to 40 positions on .100"(2,54) centers and a wide variety of row spacing
- Machined (Premium Series) and stamped (Economy Series) contacts are available

APPLICATION DIMENSIONS:

- PCB Thickness Range: Standard .062" and .092" (1,57 and 2,34)
- IC Pin Dimension Range:.016" to .021" (0,41 to 0,53) dia., .105" (2,67) min. length
- PCB Hole Size Range: .035" ± .003" (0,89 ± 0,08) standard mount, .055 ± .001" (1,40 ± 0,03) low profile mount

MATERIAL SPECIFICATIONS:

Carrier .....Aluminum
Sleeve .....Machined brass
Contact .....Beryllium copper
Sleeve Plating .....Tin/lead or gold
Contact Plating .....Premium or Economy Series (ES) - gold or tin/lead
Economy Series (ESL) - low gold

PERFORMANCE SPECIFICATIONS:

MECHANICAL

Vibration .....Passed MIL-STD-1344, Method 2005.1, Condition II, 10 G's
Shock.....Passed MIL-STD-1344, Method 2004.1, Condition C, 100 G's
Durability .....Passed MIL-STD-1344, Method 2016
Normal Force .....125 Grams average with .018" (0,46) dia. polished steel pin (Premium Series)
200 Grams average with .018" (0,46) dia. polished steel pin (Economy Series)
Inner Contact Retention in Sleeve .....7.5 Lbs. per line average
Sleeve Retention in Plastic.....3.0 Lbs. per line minimum
Solderability .....Passed MIL-STD-202F, Method 208
Insertion Force .....Premium - 134 Grams (4.7 oz.) average with a .018" (0,46) dia. polished steel pin
Economy - 179 Grams (6.3 oz.) average with a .018" (0,46) dia. polished steel pin
Withdrawal Force ..... 63 Grams (2.2 oz.) average with a (Premium and Economy) .018" (0,46) dia. polished steel pin

ELECTRICAL

Contact Resistance .....10 Milliohms max.
Contact Rating.....3 Amps
Capacitance .....1.0 pF per MIL-STD-202, Method 305 (contact to contact)
Insulation Resistance.....5,000 Megohms min. @ 500 VDC per MIL-STD-1344, Method 3003.1
Dielectric Withstanding Voltage .....1,000 Volts RMS per MIL-STD-1344, Method 3001.1

ENVIRONMENTAL

Humidity .....Passed MIL-STD-1344, Method 1002.2, Cond. II
Thermal Shock .....Passed MIL-STD-1344, Method 1003.1, Cond. A
Operation Temperature ....Gold inner contact -55°C to +125°C, Tin/lead inner contact -55°C to +105°C

Products for Industrial & Commercial Applications
Dimensions are shown for reference purposes only.
Dimensions are in inches and millimeters unless otherwise specified. Values in brackets are metric equivalents.
Specifications subject to change.
Technical Support Center
1-800-522-6752
www.tycoelectronics.com

Four-Fingered Contacts Disposable Carriers

700 Series

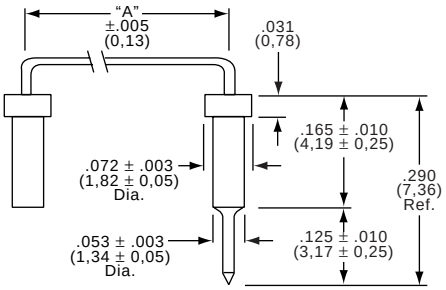

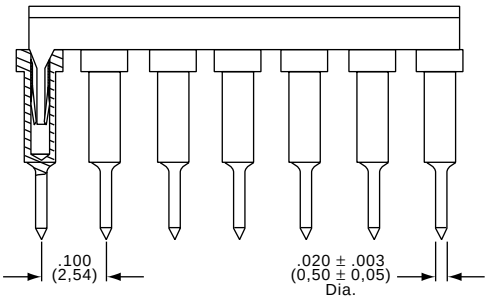

REPLACEMENT SOCKET TERMINALS

	Standard Mount	Low Profile Mount
Gold Sleeve	LSG-1AG14-1	LSG-1DG17-1
Tin/Lead Sleeve	LSG-1AG14-14	LSG-1DG17-14

MOUNTING OPTIONS

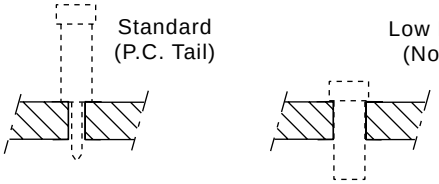

STANDARD MOUNT PART NUMBERS

Economy Series Part Number	Premium Series Part Number	Number of Contacts	Contact Plating	Sleeve Plating	A	Economy Series Part Number	Premium Series Part Number	Number of Contacts	Contact Plating	Sleeve Plating	A
——	706-AG1D	6	Gold	Gold	.300 (7,62)	——	724-AG1D	24	Gold	Gold	.300 (7,62)
706-AG2D-ES	706-AG2D	6	Gold	Tin/Lead		724-AG2D-ES	724-AG2D	24	Gold	Tin/Lead	
706-AG2D-ESL	——	6	Low Gold	Tin/Lead		724-AG2D-ESL	——	24	Low Gold	Tin/Lead	
——	708-AG1D	8	Gold	Gold		——	724-AG21D	24	Gold	Gold	.400 (10,16)
708-AG2D-ES	708-AG2D	8	Gold	Tin/Lead		724-AG22D-ES	724-AG22D	24	Gold	Tin/Lead	
708-AG2D-ESL	——	8	Low Gold	Tin/Lead		724-AG22D-ESL	——	24	Low Gold	Tin/Lead	
——	714-AG1D	14	Gold	Gold		——	724-AG3D	24	Gold	Gold	.600 (15,24)
714-AG2D-ES	714-AG2D	14	Gold	Tin/Lead		724-AG4D-ES	724-AG4D	24	Gold	Tin/Lead	
714-AG2D-ESL	——	14	Low Gold	Tin/Lead		724-AG4D-ESL	——	24	Low Gold	Tin/Lead	
——	716-AG1D	16	Gold	Gold		——	728-AG3D	28	Gold	Gold	
716-AG2D-ES	716-AG2D	16	Gold	Tin/Lead		728-AG4D-ES	728-AG4D	28	Gold	Tin/Lead	
716-AG2D-ESL	——	16	Low Gold	Tin/Lead		728-AG4D-ESL	——	28	Low Gold	Tin/Lead	
——	718-AG1D	18	Gold	Gold		——	732-AG3D	32	Gold	Gold	
718-AG2D-ES	718-AG2D	18	Gold	Tin/Lead		732-AG4D-ES	732-AG4D	32	Gold	Tin/Lead	
718-AG2D-ESL	——	18	Low Gold	Tin/Lead		732-AG4D-ESL	——	32	Low Gold	Tin/Lead	
——	720-AG1D	20	Gold	Gold		——	736-AG3D	36	Gold	Gold	
720-AG2D-ES	720-AG2D	20	Gold	Tin/Lead		736-AG4D-ES	736-AG4D	36	Gold	Tin/Lead	
720-AG2D-ESL	——	20	Low Gold	Tin/Lead		736-AG4D-ESL	——	36	Low Gold	Tin/Lead	
——	722-AG1D	22	Gold	Gold	.400 (10,16)	——	740-AG3D	40	Gold	Gold	
722-AG2D-ES	722-AG2D	22	Gold	Tin/Lead		740-AG4D-ES	740-AG4D	40	Gold	Tin/Lead	
722-AG2D-ESL	——	22	Low Gold	Tin/Lead		740-AG4D-ESL	——	40	Low Gold	Tin/Lead	
——	722-AG21D	22	Gold	Gold	.300 (7,62)						
722-AG22D-ES	722-AG22D	22	Gold	Tin/Lead							
722-AG22D-ESL	——	22	Low Gold	Tin/Lead							

LOW PROFILE PART NUMBERS

Low Profile Part Number	Number of Contacts	Outer Sleeve Plating	A	Low Profile Part Number	Number of Contacts	Outer Sleeve Plating	A
706-AG10D	6	Gold	.300 (7,62)	724-AG10D	24	Gold	.300 (7,62)
706-AG20D	6	Tin/Lead		724-AG20D	24	Tin/Lead	
708-AG10D	8	Gold		724-AG410D	24	Gold	.400 (10,16)
708-AG20D	8	Tin/Lead		724-AG420D	24	Tin/Lead	
714-AG10D	14	Gold		724-AG30D	24	Gold	.600 (15,24)
714-AG20D	14	Tin/Lead		724-AG40D	24	Tin/Lead	
716-AG10D	16	Gold		728-AG30D	28	Gold	
716-AG20D	16	Tin/Lead		728-AG40D	28	Tin/Lead	
718-AG10D	18	Gold		732-AG30D	32	Gold	
718-AG20D	18	Tin/Lead		732-AG40D	32	Tin/Lead	
720-AG10D	20	Gold		736-AG30D	36	Gold	
720-AG20D	20	Tin/Lead		736-AG40D	36	Tin/Lead	
722-AG10D	22	Gold	.400 (10,16)	740-AG30D	40	Gold	
722-AG20D	22	Tin/Lead		740-AG40D	40	Tin/Lead	
722-AG310D	22	Gold	.300 (7,62)				
722-AG320D	22	Tin/Lead					

Note: Before ordering, see Cross Reference in Section 15 for equivalent Tyco Electronics Part Number.

Products for Industrial & Commercial Applications
Dimensions are shown for reference purposes only.
Dimensions are in inches and millimeters unless otherwise specified. Values in brackets are metric equivalents.
Specifications subject to change.
Technical Support Center
1-800-522-6752
www.tycoelectronics.com

Four-Fingered Contact Open Insulator

800 Series

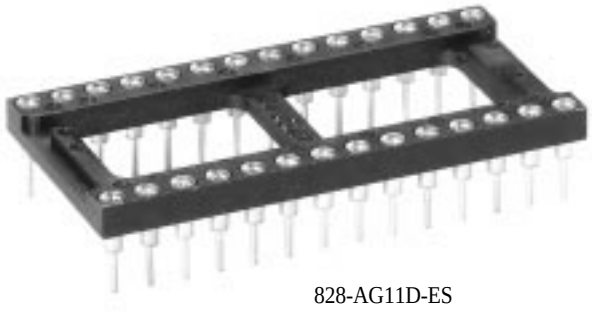

828-AG11D-ES

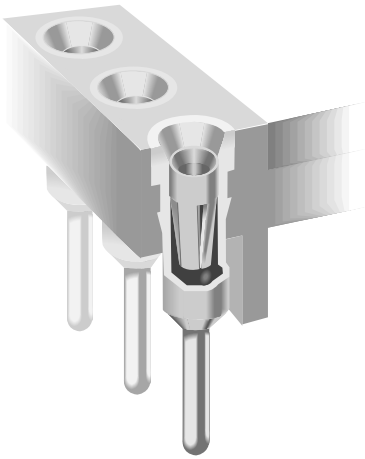

FEATURES:

The 800 Series combines precision four-fingered inner contacts with an open ladder insulator to produce the ultimate high-reliability socket.

- Precision four-fingered inner contacts provide concentric funnel entry for easy flat and round lead insertion
- "X" & "Y" stackable. Open ladder for cooling, cleaning and inspection. Low profile
- Accommodates 8 through 64 pins DIPS, rectangular or round IC leads
- Non-wicking, closed bottom sleeve provides 100% protection against flux and solder contamination. Choice of solderless wrap or PC termination
- ® Recognized under the Component Program of Underwriter Laboratories, Inc. File No. E111362
- Beryllium copper inner contact for maximum mechanical and electrical performance
- Machined (Premium Series) and stamped (Economy Series) contacts are available
- For extreme conditions involving shock and vibration, The AMP high retention force contact is available

APPLICATION DIMENSIONS:

- PCB Thickness Range: Standard .062" and .092" (1,57 and 2,34)
- PCB Hole Size Range: .035" ± .002" (0,89 ± 0,05) PC tail,
  .055" ± .003" (1,40 ± 0,08) solderless wrap
- IC Pin Dimension Range: .009" x .015" (0,23 x 0,38) through
  .011" x .020" (0,28 x 0,51)
  .016" to .021" (0,41 to 0,53) round lead
  .105" (2,67) min. length

MATERIAL SPECIFICATIONS:

Insulator.....Thermoplastic polyester, UL rated 94V-0
Sleeve .....Machined brass
Contact .....Beryllium copper
Sleeve Plating .....Tin/lead or gold
Contact Plating .....Premium or Economy Series (ES) - gold or tin/lead
Economy Series (ESL) - low gold

PERFORMANCE SPECIFICATIONS:

MECHANICAL

Vibration .....Passed MIL-STD-1344, Method 2005.1, Condition II, 10 G's
Shock.....Passed MIL-STD-1344, Method 2004.1, Condition C, 100 G's
Durability .....Passed MIL-STD-1344, Method 2016
Normal Force .....125 Grams (4.4 oz.) average with .018" (0,46) dia. polished steel pin (Premium Series)
200 Grams (7.1 oz.) average with .018" (0,46) dia. polished steel pin (Economy Series)
Inner Contact Retention 7.5 Lbs. per line average
Sleeve Retention in Plastic 3.0 Lbs. per line minimum
Solderability .....Passed MIL-STD-202F, Method 208
Insertion Force .....Premium - 134 grams (4.7 oz.) average with a .018" (0,46) dia. polished steel pin
Economy - 179 grams (6.3 oz.) average with a .018" (0,46) dia. polished steel pin
Withdrawal Force .....63 Grams (2.2 oz.) average with a
(Premium and Economy) .018" (0,46) dia. polished steel pin

ELECTRICAL

Contact Resistance .....10 Milliohms max.
Contact Rating.....3 Amps
Capacitance .....1 pF per MIL-STD-202, Method 305 (contact to contact)
Insulation Resistance.....5,000 Megohms min. @ 500 VDC per MIL-STD-1344, Method 3003.1
Dielectric Withstanding Voltage .....1,000 Volts RMS per MIL-STD-1344, Method 3001.1

ENVIRONMENTAL

Humidity .....Passed MIL-STD-1344, Method 1002.2, Cond. II
Thermal Shock .....Passed MIL-STD-1344, Method 1003.1, Cond. A
Operation Temperature ....Gold inner contact -55°C to +125°C, Tin/lead inner contact -55°C to +105°C

Products for Industrial & Commercial Applications
Dimensions are shown for reference purposes only.
Dimensions are in inches and millimeters unless otherwise specified. Values in brackets are metric equivalents.
Specifications subject to change.
Technical Support Center
1-800-522-6752
www.tycoelectronics.com

Four-Fingered Contact Open Insulator

800 Series
STANDARD CONFIGURATIONS

Number of Contacts	A	B*	C	Number of Contacts	A	B*	C
8	.400 (10,16)	.300 (7,62)	.400 (10,16)	24	1.200 (30,48)	.600 (15,24)	.700 (17,78)
14	.700 (17,78)			28	1.400 (35,56)		
16	.800 (20,32)			32	1.600 (40,64)		
18	.900 (22,86)			36	1.800 (45,72)		
20	1.000 (25,40)			40	2.000 (50,80)		
22	1.100 (27,94)	.400 (10,16)	.500 (12,70)	42	2.100 (53,34)		
24	1.200 (30,48)	.300 (7,62)	.400 (10,16)	48	2.400 (60,96)		
24		.400 (10,16)	.500 (12,70)	64	3.200 (81,28)	.900 (22,86)	1.000 (25,40)

* Dimension **B** ± .005 (0,13)

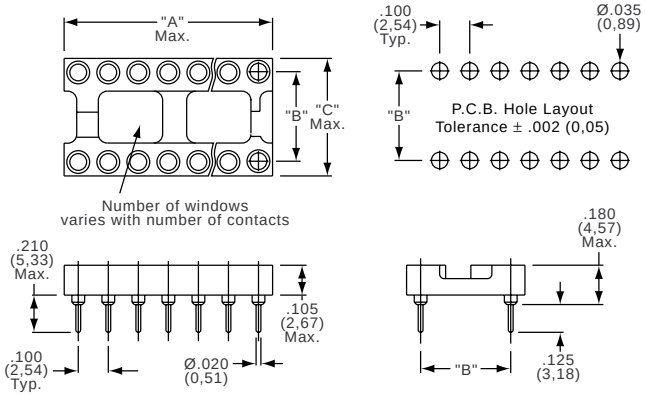

Note: Before ordering, see Cross Reference in Section 15 for equivalent Tyco Electronics Part Number.

PART NUMBERS

Economy Series	Premium Series	Position	Centerline	Contact	Sleeve
348465	348465	6	.300 (7,62)	Gold	Tin/Lead
348466	348466	8	.300 (7,62)	Gold	Tin/Lead
808-AG10D-ES	808-AG10D	8		Gold	Gold
808-AG10D-ESL		8		Low Gold	Gold
808-AG11D-ES	808-AG11D	8		Gold	Tin/Lead
808-AG11D-ESL		8		Low Gold	Tin/Lead
808-AG12D-ES	808-AG12D	8		Tin/Lead	Tin/Lead
348467	348467	10	.300 (7,62)	Gold	Tin/Lead
348468	348468	14	.300 (7,62)	Gold	Tin/Lead
814-AG10D-ES	814-AG10D	14		Gold	Gold
814-AG10D-ESL		14		Low Gold	Gold
814-AG11D-ES	814-AG11D	14		Gold	Tin/Lead
814-AG11D-ESL		14		Low Gold	Tin/Lead
814-AG12D-ES	814-AG12D	14		Tin/Lead	Tin/Lead
348469	348469	16	.300 (7,62)	Gold	Tin/Lead
816-AG10D-ES	816-AG10D	16		Gold	Gold
816-AG10D-ESL		16		Low Gold	Gold
816-AG11D-ES	816-AG11D	16		Gold	Tin/Lead
816-AG11D-ESL		16		Low Gold	Tin/Lead
816-AG12D-ES	816-AG12D	16		Tin/Lead	Tin/Lead
348470	348470	18	.300 (7,62)	Gold	Tin/Lead
818-AG10D-ES	818-AG10D	18		Gold	Gold
818-AG10D-ESL		18		Low Gold	Gold
818-AG11D-ES	818-AG11D	18		Gold	Tin/Lead
818-AG11D-ESL		18		Low Gold	Tin/Lead
818-AG12D-ES	818-AG12D	18		Tin/Lead	Tin/Lead
348471	348471	20	.300 (7,62)	Gold	Tin/Lead
820-AG10D-ES	820-AG10D	20		Gold	Gold
820-AG10D-ESL		20		Low Gold	Gold
820-AG11D-ES	820-AG11D	20		Gold	Tin/Lead
820-AG11D-ESL		20		Low Gold	Tin/Lead
820-AG12D-ES	820-AG12D	20		Tin/Lead	Tin/Lead
348472	348472	22	.300 (7,62)	Gold	Tin/Lead
348475	348475	22	.400 (10,16)	Gold	Tin/Lead
822-AG10D-ES	822-AG10D	22		Gold	Gold
822-AG10D-ESL		22		Low Gold	Gold
822-AG11D-ES	822-AG11D	22		Gold	Tin/Lead
822-AG11D-ESL		22		Low Gold	Tin/Lead
822-AG12D-ES	822-AG12D	22		Tin/Lead	Tin/Lead
348473	348473	24	.300 (7,62)	Gold	Tin/Lead
824-AG30D-ES	824-AG30D	24		Gold	Gold
824-AG30D-ESL		24		Low Gold	Gold
824-AG31D-ES	824-AG31D	24		Gold	Tin/Lead
824-AG31D-ESL		24		Low Gold	Tin/Lead
824-AG32D-ES	824-AG32D	24		Tin/Lead	Tin/Lead
348476	348476	24	.400 (10,16)	Gold	Tin/Lead
824-AG65D-ES	824-AG65D	24		Gold	Gold
824-AG65D-ESL		24		Low Gold	Gold
824-AG66D-ES	824-AG66D	24		Gold	Tin/Lead
824-AG66D-ESL		24		Low Gold	Tin/Lead
824-AG14D-ES	824-AG14D	24		Tin/Lead	Tin/Lead

Economy Series	Premium Series	Position	Centerline	Contact	Sleeve
348479	348479	24	.600 (15,24)	Gold	Tin/Lead
824-AG10D-ES	824-AG10D	24		Gold	Gold
824-AG10D-ESL		24		Low Gold	Gold
824-AG11D-ES	824-AG11D	24		Gold	Tin/Lead
824-AG11D-ESL		24		Low Gold	Tin/Lead
824-AG12D-ES	824-AG12D	24		Tin/Lead	Tin/Lead
348474	348474	28	.300 (7,62)	Gold	Tin/Lead
348477	348477	28	.400 (10,16)	Gold	Tin/Lead
348480	348480	28	.600 (15,24)	Gold	Tin/Lead
828-AG10D-ES	828-AG10D	28		Gold	Gold
828-AG10D-ESL		28		Low Gold	Gold
828-AG11D-ES	828-AG11D	28		Gold	Tin/Lead
828-AG11D-ESL		28		Low Gold	Tin/Lead
828-AG12D-ES	828-AG12D	28		Tin/Lead	Tin/Lead
348478	348478	32	.400 (10,16)	Gold	Tin/Lead
348481	348481	32	.600 (15,24)	Gold	Tin/Lead
832-AG10D-ES	832-AG10D	32		Gold	Gold
832-AG10D-ESL		32		Low Gold	Gold
832-AG11D-ES	832-AG11D	32		Gold	Tin/Lead
832-AG11D-ESL		32		Low Gold	Tin/Lead
832-AG12D-ES	832-AG12D	32		Tin/Lead	Tin/Lead
348482	348482	36	.600 (15,24)	Gold	Tin/Lead
836-AG10D-ES	836-AG10D	36		Gold	Gold
836-AG10D-ESL		36		Low Gold	Gold
836-AG11D-ES	836-AG11D	36		Gold	Tin/Lead
836-AG11D-ESL		36		Low Gold	Tin/Lead
836-AG12D-ES	836-AG12D	36		Tin/Lead	Tin/Lead
348483	348483	40	.600 (15,24)	Gold	Tin/Lead
840-AG10D-ES	840-AG10D	40		Gold	Gold
840-AG10D-ESL		40		Low Gold	Gold
840-AG11D-ES	840-AG11D	40		Gold	Tin/Lead
840-AG11D-ESL		40		Low Gold	Tin/Lead
840-AG12D-ES	840-AG12D	40		Tin/Lead	Tin/Lead
348484	348484	42	.600 (15,24)	Gold	Tin/Lead
842-AG10D-ES	842-AG10D	42		Gold	Gold
842-AG10D-ESL		42		Low Gold	Gold
842-AG11D-ES	842-AG11D	42		Gold	Tin/Lead
842-AG11D-ESL		42		Low Gold	Tin/Lead
842-AG12D-ES	842-AG12D	42		Tin/Lead	Tin/Lead
348485	348485	48	.600 (15,24)	Gold	Tin/Lead
848-AG10D-ES	848-AG10D	48		Gold	Gold
848-AG10D-ESL		48		Low Gold	Gold
848-AG11D-ES	848-AG11D	48		Gold	Tin/Lead
848-AG11D-ESL		48		Low Gold	Tin/Lead
848-AG12D-ES	848-AG12D	48		Tin/Lead	Tin/Lead
348486	348486	50	.600 (15,24)	Gold	Tin/Lead
348488	348488	50	.900 (22,86)	Gold	Tin/Lead

Note: Before ordering, see Cross Reference in Section 15 for equivalent Tyco Electronics Part Number.

Products for Industrial & Commercial Applications
Dimensions are shown for reference purposes only.
Dimensions are in inches and millimeters unless otherwise specified. Values in brackets are metric equivalents.
Specifications subject to change.
Technical Support Center
1-800-522-6752
www.tycoelectronics.com

Four Fingered Contact Open Insulator

PART NUMBERS

Economy Series	Premium Series	Position	Centerline	Contact	Sleeve
348487	348487	52	.600 (15,24)	Gold	Tin/Lead
348489	348489	52	.900 (22,86)	Gold	Tin/Lead
348490	348490	64	.900 (22,86)	Gold	Tin/Lead
864-AG10D-ES	864-AG10D	64		Gold	Gold
864-AG10D-ESL		64		Low Gold	Gold
864-AG11D-ES	864-AG11D	64	.900 (22,86)	Gold	Tin/Lead
864-AG11D-ESL		64		Low Gold	Tin/Lead
864-AG12D-ES	864-AG12D	64		Tin/Lead	Tin/Lead

Economy and Premium Series - .180" (4,57) PC Tail Pins

8XX-AG44D-XXX - Gold contact, tin/lead sleeve
8XX-AG45D-XXX - Gold contact, gold sleeve
8XX-AG43D-XXX - Tin/lead contact, tin/lead sleeve

High Retention Series

8XX-AG34D - Gold contact, tin/lead sleeve
8XX-AG33D - Gold contact, gold sleeve
8XX-AG38D - Tin/lead contact, tin/lead sleeve

Note: Part numbers in this chart and in detail shown refer to a .125" (3,18) PC Tail Pin

For wire-wrap sockets or 24 position on .300" (7,62) or .400" (10,16) in high retention or .180" (4,57) tails, please consult Tyco Electronics.

Note: Before ordering, see Cross Reference in Section 15 for equivalent Tyco Electronics Part Number.

Surface Mount

800 SM Series



814-AG11SM

FEATURES:

Tyco Electronics offers the precision machined 800SM Series which achieves compliancy to the board surface and is designed for high temperatures typical of vapor phase and infrared reflow soldering.

- "Butt" style terminals float in plastic housing for compliancy to board surface
- Precision four-fingered inner contacts provide concentric funnel entry for easy flat or round insertion

APPLICATION DIMENSIONS:

- PCB Thickness Range: Standard .062" and .092" (1,57 and 2,34)
- IC Pin Dimension Range: .009" x .015" (0,23 x 0,38) through .011" x .020" (0,28 x 0,51) .016" to .021" (0,41 to 0,53) round lead .105" (2,67) min. length

MATERIAL SPECIFICATIONS:

Insulator.....Thermoplastic polyester, UL rated 94V-0
Outer Sleeve .....Brass
Contacts.....Beryllium copper
Sleeve Plating .....Tin/lead
Contact Plating .....Gold or tin/lead

PERFORMANCE SPECIFICATIONS:

MECHANICAL

Vibration .....Passed MIL-STD-1344, Method 2005.1, Condition II, 10 G's
Shock.....Passed MIL-STD-1344, Method 2004.1, Condition C, 100 G's
Durability .....Passed MIL-STD-1344, Method 2016
Inner Contact Retention .....7.5 Lbs. per line average
Solderability .....Passed MIL-STD-202F, Method 208
Insertion Force .....179 Grams (6.3 oz.) average with a .018" (0,46) dia. polished steel pin
Withdrawal Force .....63 Grams (2.2 oz.) average with a .018" (0,46) dia. polished steel pin

ELECTRICAL

Contact Resistance .....10 Milliohms max.
Contact Rating.....3 Amps
Capacitance .....1.0 pF per MIL-STD-202, Method 305 (contact to contact)
Insulation Resistance.....5,000 Megohms min. @ 500 VDC per MIL-STD-1344, Method 3003.1
Dielectric Withstanding Voltage .....1,000 Volts RMS per MIL-STD-1344, Method 3001.1

ENVIRONMENTAL

Humidity .....Passed MIL-STD-1344, Method 1002.2, Cond. II
Thermal Shock .....Passed MIL-STD-1344, Method 1003.1, Cond. A
Operation Temperature ....Gold inner contact -55°C to +125°C, Tin/lead inner contact -55°C to +105°C

Products for Industrial & Commercial Applications
Dimensions are shown for reference purposes only.
Dimensions are in inches and millimeters unless otherwise specified. Values in brackets are metric equivalents.
Specifications subject to change.
Technical Support Center
1-800-522-6752
www.tycoelectronics.com

Surface Mount

800 SM Series

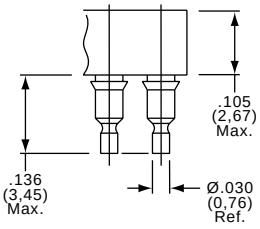

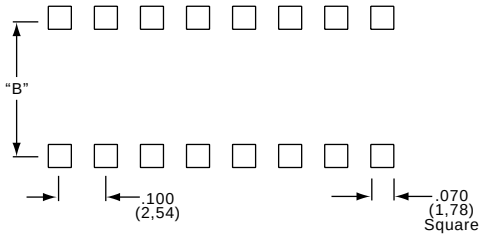

Recommended Pad Pattern
Tolerance ± .002 (0,05)

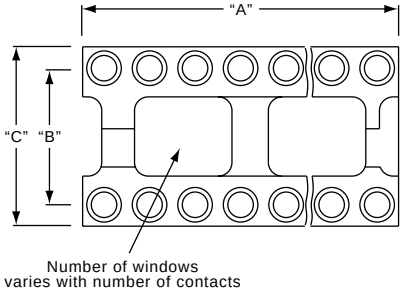

STANDARD CONFIGURATIONS

Number of Contacts	A	B*	C	Number of Contacts	A	B*	C
8	.400 (10,16)	.300 (7,62)	.400 (10,16)	24	1.200 (30,48)	.600 (15,24)	.700 (17,78)
14	.700 (17,78)			28	1.400 (35,36)		
16	.800 (20,32)			32	1.600 (40,64)		
18	.900 (22,86)			36	1.800 (45,72)		
20	1.000 (25,40)			40	2.000 (50,80)		
22	1.100 (27,94)	.400 (10,16)	.500 (12,70)	42	2.100 (53,34)		
24	1.200 (30,48)	.300 (7,62)	.400 (10,16)	48	2.400 (60,96)		
24	1.200 (30,48)	.400 (10,16)	.500 (12,70)	64	3.200 (81,28)	.900 (22,86)	1.000 (25,40)

* Dimension **B** ± .005 (0,13)

PART NUMBERS

Part Number	Position	Centerline	Contact	Part Number	Position	Centerline	Contact
808-AG11SM 808-AG12SM	8 8	.300 (7,62)	Gold Tin/Lead	824-AG11SM 824-AG12SM	24 24	.600 (15,24)	Gold Tin/Lead
814-AG11SM 814-AG12SM	14 14	.300 (7,62)	Gold Tin/Lead	828-AG11SM 828-AG12SM	28 28	.600 (15,24)	Gold Tin/Lead
816-AG11SM 816-AG12SM	16 16	.300 (7,62)	Gold Tin/Lead	832-AG11SM 832-AG12SM	32 32	.600 (15,24))	Gold Tin/Lead
818-AG11SM 818-AG12SM	18 18	.300 (7,62)	Gold Tin/Lead	836-AG11SM 836-AG12SM	36 36	.600 (15,24)	Gold Tin/Lead
820-AG11SM 820-AG12SM	20 20	.300 (7,62)	Gold Tin/Lead	840-AG11SM 840-AG12SM	40 40	.600 (15,24)	Gold Tin/Lead
822-AG11SM 822-AG12SM	22 22	.300 (7,62)	Gold Tin/Lead	842-AG11SM 842-AG12SM	42 42	.600 (15,24)	Gold Tin/Lead
824-AG31SM 824-AG32SM	24 24	.300 (7,62)	Gold Tin/Lead	848-AG11SM 848-AG12SM	48 48	.600 (15,24)	Gold Tin/Lead
824-AG66SM 824-AG14SM	24 24	.400 (10,16)	Gold Tin/Lead	864-AG11SM 864-AG12SM	64 64	.900 (22,86)	Gold Tin/Lead

Note: Before ordering, see Cross Reference in Section 15 for equivalent Tyco Electronics Part Number.

Products for Industrial & Commercial Applications
Dimensions are shown for reference purposes only.
Dimensions are in inches and millimeters unless otherwise specified. Values in brackets are metric equivalents.
Specifications subject to change.
Technical Support Center
1-800-522-6752
www.tycoelectronics.com

DIP Insertion and Withdrawal Tools

TI/TW Series



T114-1

DIP WITHDRAWAL TOOL

Part Number	Description
T114-1	Simple tool that assists removal of DIP from top side of panel

Note: Before ordering, see Cross Reference in Section 15 for equivalent Tyco Electronics Part Number.

The insertion and extraction of dual inline integrated circuit packages has always presented the problem of aligning all leads simultaneously. The TI/TW family of tools solve this problem with a range of tools for 8 thru 40 pin devices.

FEATURES:

- Smooth insertion and withdrawal of ICs.
- Prevents bending of IC leads while inserting and removing.
- Ensures greater socketing reliability.
- Uses limited amount of board space for support.
- Available in flexible roll pouch for convenient organization of service tool kit.



TI 8136-14/16

INSERTION TOOLS

Part Number	Accepts Components
TI8136-8	8 leads on .300 (7,62) centers
TI8136-14/16	14 and 16 leads on .300 (7,62) centers
TI8136-18/20	18 and 20 leads on .300 (7,62) centers
TI8136-22	22 leads on .400 (10,16) centers
TI8136-24/28	24 and 28 leads on .600 (15,24) centers
TI8136-32/40	32 thru 40 leads on .600 (15,24) centers



TW 8136-24/28

WITHDRAWAL TOOLS

Part Number	Accepts Components
TW8136-8	8 leads on .300 (7,62) centers
TW8136-14/20	14 and 16 leads on .300 (7,62) centers
TW8136-22	22 leads on .400 (10,16) centers
TW8136-24/28	24 and 28 leads on .600 (15,24) centers
TW8136-32/40	32 thru 40 leads on .600 (15,24) centers
TK8136-1G1	8 thru 40 position insertion and extraction tools in a 26-pocket, reinforced, double thick vinyl roll pouch

Note: Before ordering, see Cross Reference in Section 15 for equivalent Tyco Electronics Part Number.

Products for Industrial & Commercial Applications
Dimensions are shown for reference purposes only.
Dimensions are in inches and millimeters unless otherwise specified. Values in brackets are metric equivalents.
Specifications subject to change.
Technical Support Center
1-800-522-6752
www.tycoelectronics.com

DIP Withdrawal Tools

TX Series

FEATURES:

- The extractor tool uses the shoulders of the IC socket or surface of the printed wiring board as a stable lifting platform, designed for no slippage or misalignment during removal of the IC, as often happens when using traditional IC removal tools.
- Can be grounded to protect delicate MOS devices from static discharge.
- Lead screw adjustment applies a constant parallel axial force, eliminating problems with bent or broken IC pins.
- These extractor tools remove soldered or socketed ICs from printed wiring boards. Soldered ICs are removed by applying heat to the soldered junction, while gently turning knob to exert a continuous force.

OPERATION:

Plunger button opens and closes support legs encasing the IC. Turning knob raises the IC from its socketed or soldered position.

WITHDRAWAL TOOLS

Part Number	Description
TX8136-14/20	14 to 20 pins .300" (7,62) rows
TX8136-22	22 pins .400" (10,16) rows
TX8136-24	24 pins .600 (15,24) rows
TX8136-40	40 pins .600 (15,24) rows
TX8136-64	64 pins .900" (22,86) rows

Note: Before ordering, see Cross Reference in Section 15 for equivalent Tyco Electronics Part Number.

IC WITHDRAWAL TOOL

The TX 8136 Family of precision lead extractor tools provide for a controlled, aligned and parallel withdrawal of ICs. This saves you many times the cost of the tool by protecting expensive IC devices from pin damage.



TX 8136-40

Products for Industrial & Commercial Applications
Dimensions are shown for reference purposes only.
Dimensions are in inches and millimeters unless otherwise specified. Values in brackets are metric equivalents.
Specifications subject to change.
Technical Support Center
1-800-522-6752
www.tycoelectronics.com

Solder Tail Dual Leaf (DL) Contact

Product Facts

- **Low Profile — .210 [5.33] max. seating plane above pc board**
- **Dual wiping contacts**
- **Face wipe contacts for high reliability and constant, low resistance**
- **Anti-overstress prevents contact damage**
- **Large target area with tapered lead-in ramps for easy SIP insertion**
- **"True closed bottom" design inhibits solder wicking and flux contamination**
- **Stackable end-to-end and side-to-side (brickwalling) for high board density**
- **Housing standoffs and slots facilitate board cleaning**
- **Family of 3 through 25 positions**
- **Retention-style solder tails**
- **Visual polarization**
- **Meets the material requirements of Table 23.1 of UL 1410 Standard for Television Receivers and Video Products**
- **Tin or gold plated beryllium copper or tin plated phosphor bronze contacts**
- **Designed to meet EIA RS-415, MIL-S-83734 and stringent computer specifications**
- **Recognized under the Component Program of Underwriters Laboratories Inc., File E28476**
- **Certified by Canadian Standards Association File No. LR 7189**

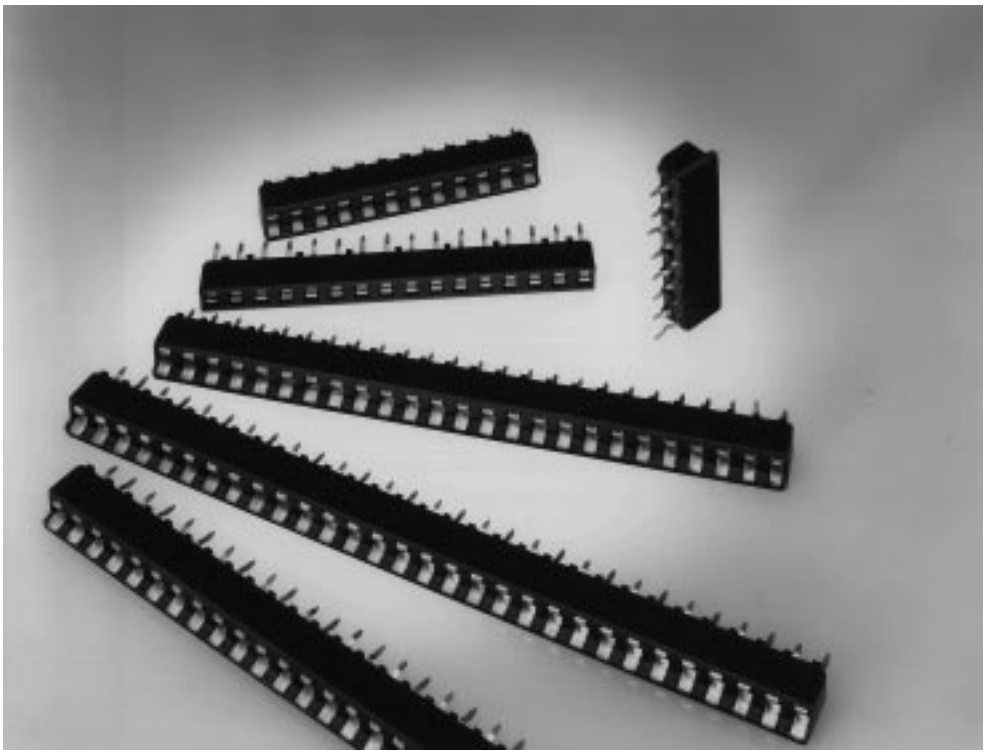

The Dual Leaf (DL) SIP socket family provides high quality at low cost with superior handling characteristics. Sockets are available in 3- through 25-position sizes with dual wiping contacts in tin and gold plating over beryllium copper or economical tin plated phosphor bronze. The large target area of the contacts and tapered side ramps in the housing promote easy entry of a SIP package. Internal anti-overstress walls prevent contact damage. These stackable housings feature a "true closed bottom" design which prevents solder or flux wicking at class 1 conditions of EIA 486.

Standoffs provide board clearance for proper cleaning after soldering. Sockets are available with retention feature solder tails for self retention in the pc board during handling and flow soldering.

Housings are constructed from self-extinguishing glass-filled polyester, 94V-0 rated material and meet the material requirements of Table 23.1 of UL 1410 Standard for Television Receivers and Video Products.

The DL SIP Socket family meets the requirements of EIA RS-415, MIL-S-83734 and the most stringent specifications of main-frame computer manufacturers.

Performance Characteristics:

Rating — Signal application only

Contact Resistance — 20 milliohms max. (initial)
30 milliohms max. (after test)

Dielectric Withstanding Voltage — 1000 VRMS min.

Insulation Resistance — 5000 megohms min.

Capacitance — 0.5 picofarad max.

Operating Temperature —
-55°C to +105°C (tin)
-55°C to +125°C (gold)

Vibration — 15 Gs, 10-2000-10 Hz in 20 minutes

Shock — 100 Gs sawtooth, 6 shocks

Engaging Force — 340 grams [3.33 N] max. (.013 [0.33] pin)

Separating Force — 25 grams [0.24 N] (.008 [0.2] pin)

Technical Documents:

Product Specification
108-1066 Standard

Application Specification
114-1049

Products for Industrial & Commercial Applications
Dimensions are shown for reference purposes only.
Dimensions are in inches and millimeters unless otherwise specified. Values in brackets are metric equivalents.
Specifications subject to change.
Technical Support Center
1-800-522-6752
www.tycoelectronics.com

Solder Tail Dual Leaf (DL)

Sockets accept .008—.014 [0.2—0.36] thick x .030 [0.76] max. wide rectangular IC leads

Material and Finish:

Housing — Glass-filled thermoplastic, 94V-0 rated, black

Contacts — Beryllium copper with gold or tin plating, or phosphor bronze with tin plating (see table)

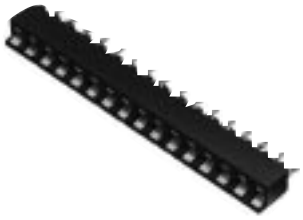

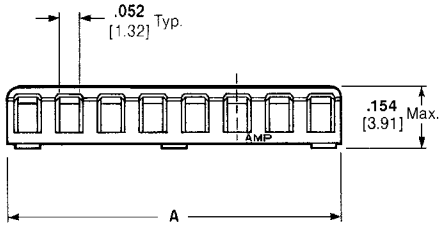

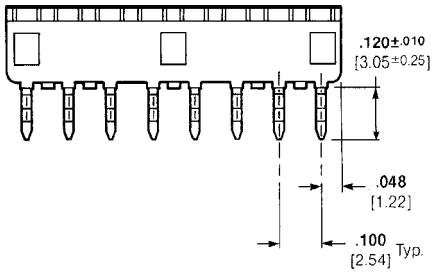

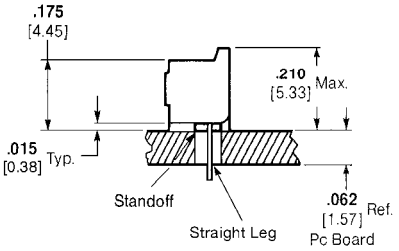

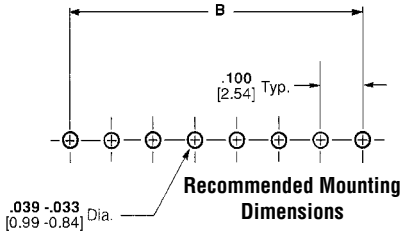

Recommended Mounting Dimensions

No. of Positions	Dimensions A	Dimensions B	Straight Solder Tail — Beryllium Copper — Tinned	Straight Solder Tail — Beryllium Copper — .000030 [0.00076] Gold Plate	Straight Solder Tail — Phosphor Bronze — Tinned	Retention Solder Tail — Beryllium Copper — Tinned	Retention Solder Tail — Beryllium Copper — .000030 [0.00076] Gold Plate	Retention Solder Tail — Phosphor Bronze — Tinned	Package Quantities — Qty. Per Tray	Package Quantities — Trays Per Box	Package Quantities — Total Qty. Per Box
3	**.295** 7.49	**.200** 5.08	382437-1	—	382437-3	—	—	—	740	4	2960
4	**.395** 10.03	**.300** 7.62	382438-1	—	382438-3	—	—	—	560	4	2240
8	**.795** 20.19	**.700** 17.78	643640-1	643640-2	—	643640-6	—	643640-8	280	4	1120
9	**.895** 22.73	**.800** 20.32	—	—	—	643641-6	—	643641-8	240	4	960
10	**.995** 25.27	**.900** 22.86	643642-1	643642-2	—	643642-6	—	643642-8	220	4	880
11	**1.095** 27.81	**1.000** 25.40	—	643643-2	—	643643-6	—	643643-8	200	4	800
12	**1.195** 30.35	**1.100** 27.94	643644-1	—	643644-3	643644-6	—	643644-8	180	4	720
13	**1.295** 32.89	**1.200** 30.48	—	643645-2	643645-3	643645-6	—	—	160	4	640
14	**1.395** 35.43	**1.300** 33.02	643646-1	—	643646-3	643646-6	—	643646-8	160	4	640
15	**1.495** 37.97	**1.400** 35.56	643647-1	—	—	643647-6	—	643647-8	140	4	560
16	**1.595** 40.51	**1.500** 38.10	643648-1	—	643648-3	—	—	643648-8	140	4	560
17	**1.695** 43.05	**1.600** 40.64	643649-1	—	—	—	—	643649-8	120	4	480
18	**1.795** 45.59	**1.700** 43.18	643650-1	—	—	643650-6	—	—	120	4	480
19	**1.895** 48.13	**1.800** 45.72	—	—	643651-3	—	—	643651-8	100	4	400
20	**1.995** 50.75	**1.900** 48.26	643652-1	—	643652-3	643652-6	643652-7	—	100	4	400
21	**2.095** 53.21	**2.000** 50.80	643653-1	—	643653-3	643653-6	—	—	100	4	400
22	**2.195** 55.75	**2.100** 53.34	643654-1	—	—	—	—	—	100	4	400
23	**2.295** 58.29	**2.200** 55.88	—	—	—	643655-6	—	643655-8	80	4	320
24	**2.395** 60.83	**2.300** 58.42	—	—	2-643656-3*	—	—	—	16	140	2240
25	**2.495** 63.37	**2.400** 60.96	643657-1	643657-2	—	643657-6	—	—	80	4	320
29	**2.895** 73.53	**2.800** 71.12	—	—	643661-3	—	—	—	60	4	240
30	**2.995** 76.07	**2.900** 73.66	643662-1	—	643662-3	—	—	—	60	4	240

*Packaged in tubes.

Products for Industrial & Commercial Applications
Dimensions are shown for reference purposes only.
Dimensions are in inches and millimeters unless otherwise specified. Values in brackets are metric equivalents.
Specifications subject to change.
Technical Support Center 1-800-522-6752 www.tycoelectronics.com

Terminal Strips, Four-Fingered Contact

500 Series



510AG91D08ESL

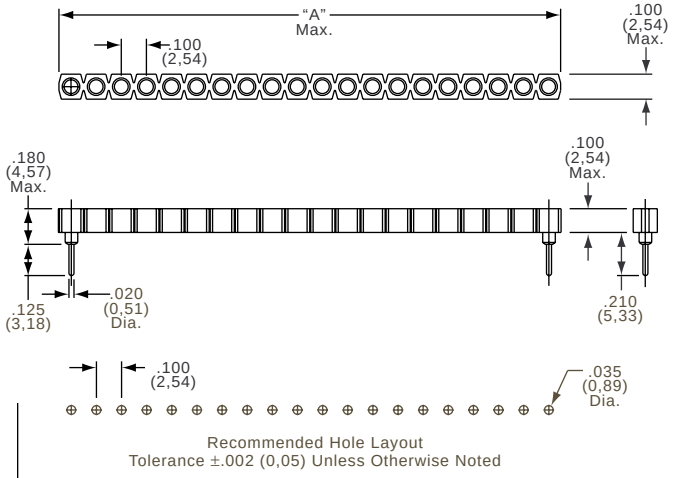

Recommended Hole Layout
Tolerance ±.002 (0,05) Unless Otherwise Noted

FEATURES:

- Available in strips of 1 to 20
- Breakaway feature for breaking strips into any desired shorter lengths (no special tooling required)
- Contact features closed end construction eliminating any solder or flux wicking problems
- Two-piece tapered entry closed entry inner contact and outer sleeve
- Accepts any IC lead and component leads .016" - .021" (0,41 - 0,53) dia., .105" (2,67) minimum length
- Uses: microprocessor sockets, hybrid IC sockets, Q.I.L. sockets, component sockets and test points
- Machined (Premium Series) and stamped (Economy Series) contacts are available

APPLICATION DIMENSIONS:

- PCB Thickness Range: Standard .062" and .092" (1,57 and 2,34)
- PCB Hole Size Range: .035" ± .003" (0,89 ± 0,08) PC tail, .055" ± .003" (1,40 ± 0,08) Solderless wrap
- IC Pin Dimension Range: .009" x .015" (0,23 x 0,38) through .011" x .020" (0,28 x 0,51) .016" x .021" (0,41 x 0,53) round lead .105" (2,67) min. length

MATERIAL SPECIFICATIONS:

Insulator.....Thermoplastic polyester, UL rated 94V-0
Inner Contact.....Beryllium copper, gold or tin/lead plated
Sleeve .....Brass, gold or tin/lead plated

PART NUMBERS

Economy Series	Premium Series	Number of Contacts	Contact Plating	Sleeve Plating	Dim. A
510AG90D10ES	510-AG90D-10	10	Gold	Gold	1.000 (25,40)
510AG90D10ESL			Low Gold	Gold	
510AG91D10ES	510-AG91D-10		Gold	Tin/Lead	
510AG91D10ESL			Low Gold	Tin/lead	
510AG92D10ES	510-AG92D-10		Tin/Lead	Tin/Lead	
510AG90D20ES	510-AG90D-20	20	Gold	Gold	2.000 (50,80)
510AG90D20ESL			Low Gold	Gold	
510AG91D20ES	510-AG91D-20		Gold	Tin/Lead	
510AG91D20ESL			Low Gold	Tin/lead	
510AG92D20ES	510-AG92D-20		Tin/Lead	Tin/Lead	

For sizes not shown or for wire-wrap termination, please consult Tyco Electronics.

ECONOMY AND PREMIUM SERIES - .180 PC TAIL PINS

510-AG45D-XX, 510AG45DXXES(L) - Gold Contact, Gold Sleeve
510-AG44D-XX, 510AG44DXXES(L) - Gold Contact, Tin/Lead Sleeve
510-AG42D-XX, 510AG42DXXES(L) - Tin/Lead Contact, Tin/Lead Sleeve

Note: Before ordering, see Cross Reference in Section 15 for equivalent Tyco Electronics Part Number.

PERFORMANCE SPECIFICATIONS:

MECHANICAL

Vibration .....Passed MIL-STD-1344, Method 2005.1, Condition II, 10 G's
Shock.....Passed MIL-STD-1344, Method 2004.1, Condition C, 100 G's
Durability .....Passed MIL-STD-1344, Method 2016
Normal Force .....125 Grams (4.4 oz.) average with .018" (0,46) dia. polished steel pin (Premium Series)
200 Grams (7.1 oz.) average with .018" (0,46) dia. polished steel pin (Economy Series)
Inner Contact Retention .. in Sleeve.....7.5 Lbs. per line average
Sleeve Retention in Plastic.....3.0 Lbs. per line minimum
Solderability .....Passed MIL-STD-202F, Method 208
Insertion Force .....Premium - 134 Grams (4.7 oz.) average with a .018" (0,46) dia. polished steel pin
Economy - 179 Grams (6.3 oz.) average with a .018" (0,46) dia. polished steel pin
Withdrawal Force .....63 Grams (2.2 oz.) average with a .018" (0,46) dia. polished steel pin

ELECTRICAL

Contact Resistance .....10 Milliohms max.
Contact Rating.....3 Amps
Capacitance .....1.0 pF per MIL-STD-202, Method 305 (contact to contact)
Insulation Resistance.....5,000 Megohms min. @ 500 VDC per MIL-STD-1344, Method 3003.1
Dielectric Withstanding Voltage .....1,000 Volts RMS per MIL-STD-1344, Method 3001.1

ENVIRONMENTAL

Humidity .....Passed MIL-STD-1344, Method 1002.2, Cond. II
Thermal Shock .....Passed MIL-STD-1344, Method 1003.1, Cond. A
Operation Temperature ....Gold inner contact -55°C to +125°C
Tin/lead inner contact -55°C to +105°C

Products for Industrial & Commercial Applications
Dimensions are shown for reference purposes only.
Dimensions are in inches and millimeters unless otherwise specified. Values in brackets are metric equivalents.
Specifications subject to change.
Technical Support Center
1-800-522-6752
www.tycoelectronics.com

Product Facts

- **Metal latches eliminate breakage**
- **Reliable contact design for durability**
- **Heat resistant housings withstand most hostile environments**
- **Designed for robotic assembly to facilitate automatic manufacturing operations**
- **Very low insertion force for easy module insertion**
- **Positive polarization prevents misinsertion**
- **Recognized under the Component Program of Underwriters Laboratories Inc., File E28476**
- **Certified by Canadian Standards Association File No. LR 7189**

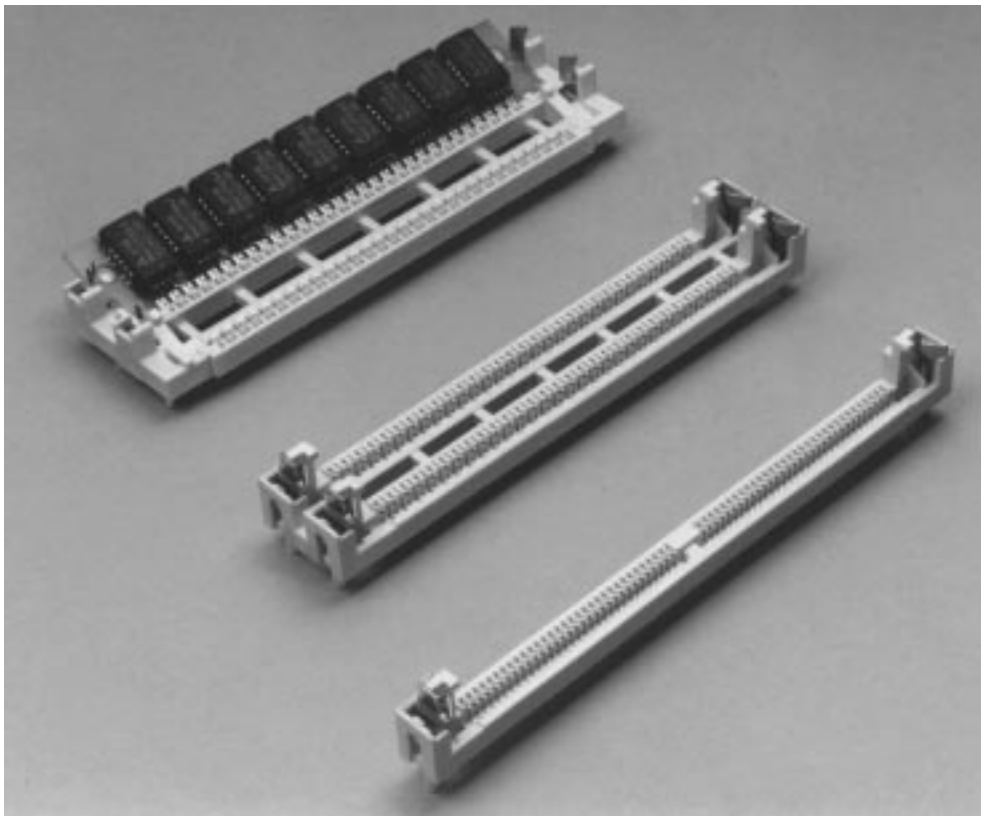

Tyco Electronics offers a metal latch version of its MICRO-EDGE SIMM sockets. This feature eliminates the breakage associated with the misuse of SIMM sockets. In addition, the metal latches will prevent shaving and/or skiving, as happens with plastic latches, due to inconsistent manufacturing methods of the board edges.

The metal latch MICRO-EDGE sockets are available in .050 [1.27] centerline configurations.

All are available in vertical and angled/low profile designs, with and without center posts.

Performance Characteristics:

Current Rating — 1 ampere max.

Termination Resistance (Dry Circuit) — 30 milliohms max. (initial)

Dielectric Withstanding Voltage — 1.0 KVAC

Insulation Resistance — 10,000 megohms min. (initial)

Capacitance — 1.0 picofarad max.

Operating Temperature — -55°C to +105°C

Durability — 25 cycles min.

Technical Documents:

Product Specification
108-1095

Application Specification
114-1061

Instruction Sheet
408-9413

Products for Industrial & Commercial Applications
Dimensions are shown for reference purposes only.
Dimensions are in inches and millimeters unless otherwise specified. Values in brackets are metric equivalents.
Specifications subject to change.
Technical Support Center
1-800-522-6752
www.tycoelectronics.com

Vertical, .050 [1.27] Centerline

Single Row (Right Polarization)

Material and Finish:

Housing — Liquid Crystal Polymer (LCP) UL 94V-0

Contacts — Phosphor bronze with .000200 [0.00508] min. thick tin-lead over .000050 [0.00127] min. thick nickel or .000030 [0.00076] min. thick gold on contact area and .000150 [0.0038] min. thick tin-lead on solder tails, all over .000050 [0.00127] min. thick nickel

Latch — Brass, nickel plated

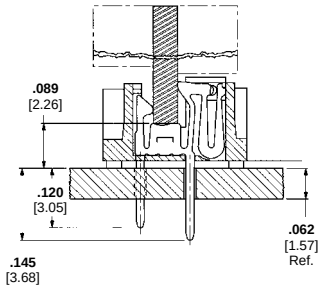

Section A-A

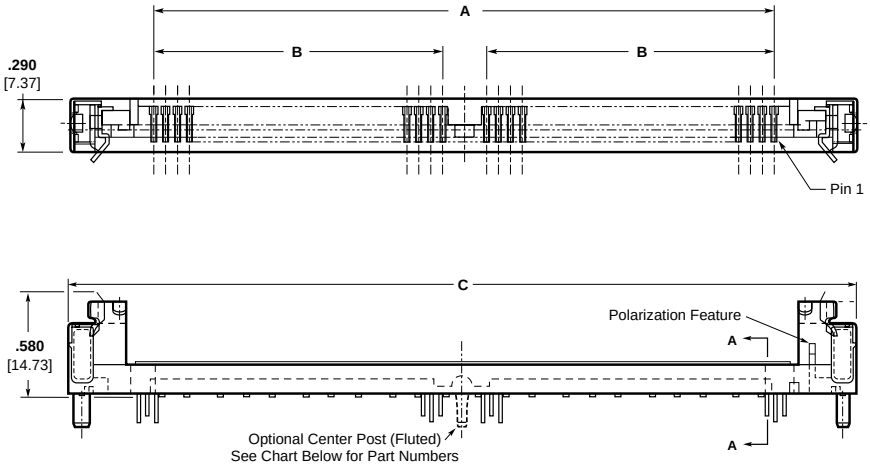

No. of Positions	Dimensions			Part Numbers			
				Tin Plate		Gold Plate	
	A	B	C	With Fluted Center Post	Without Center Post	With Fluted Center Post	Without Center Post
72	**3.750** 95.25	**1.750** 44.45	**4.550** 115.57	822021-4	822019-4	822032-4	822031-4
80	**4.150** 105.41	**1.950** 49.53	**4.950** 125.73	822021-5	—	—	—

Single Row (Left Polarization)

Material and Finish:

Housing — Liquid Crystal Polymer (LCP) UL 94V-0

Contacts — Phosphor bronze with .000200 [0.00508] min. thick tin-lead over .000050 [0.00127] min. thick nickel or .000030 [0.00076] min. thick gold on contact area and .000150 [0.0038] min. thick tin-lead on solder tails, all over .000050 [0.00127] min. thick nickel

Latch — Brass, nickel plated

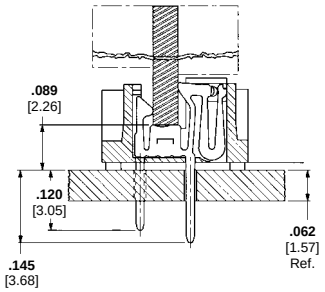

Section A-A

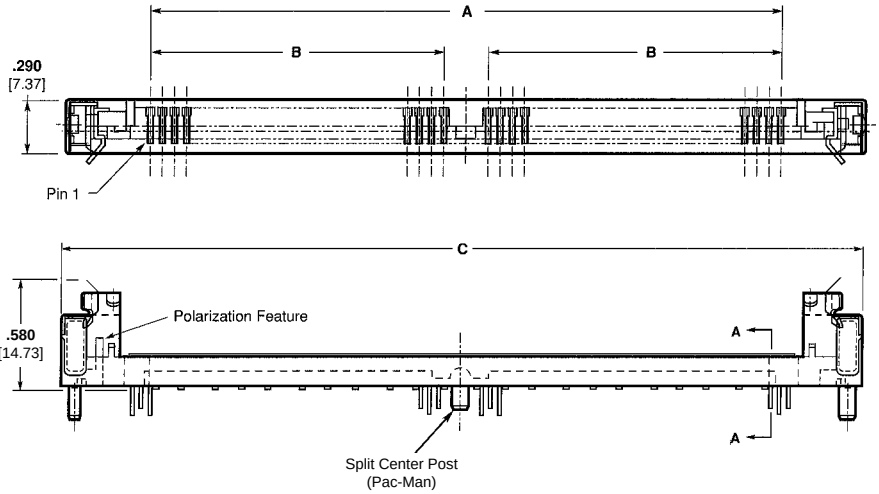

No. of Positions	Dimensions			Part Numbers	
	A	B	C	Tin Plate	Gold Plate
72	**3.750** 95.25	**1.750** 44.45	**4.550** 115.57	822030-3	821997-3
80	**4.150** 105.41	**1.950** 49.53	**4.950** 125.73	822030-4	—

Products for Industrial & Commercial Applications

Dimensions are shown for reference purposes only.

Dimensions are in inches and millimeters unless otherwise specified. Values in brackets are metric equivalents.

Specifications subject to change.

Technical Support Center
1-800-522-6752
www.tycoelectronics.com

22° Angular, .050 [1.27] Centerline

Low Profile (22°) Single Row with Optional Fluted or Split Retention Post

Material and Finish:

Housing — Liquid Crystal Polymer (LCP) UL 94V-0

Contacts — Phosphor bronze with .000200 [0.00508] min. thick tin-lead over .000050 [0.00127] min. thick nickel or .000030 [0.00076] min. thick gold on contact area and .000150 [0.0038] min. thick tin-lead on solder tails, all over .000050 [0.00127] min. thick nickel

Latch — Stainless steel

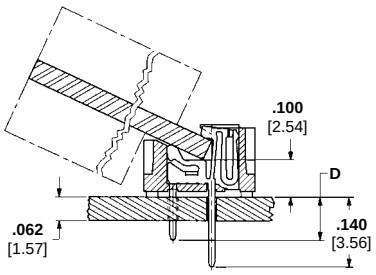

Section A-A

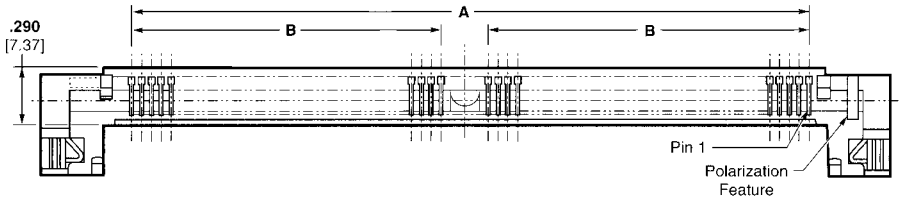

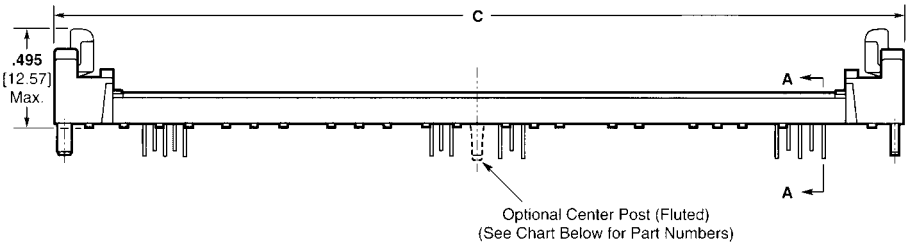

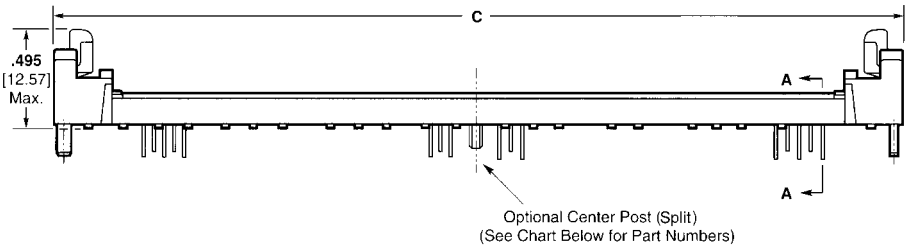

No. of Positions	Dimensions				Part Numbers					
					Tin Plate			Gold Plate		
	A	B	C	D	With Fluted Center Post	With Split Center Post	Without Center Post	With Fluted Center Post	With Split Center Post	Without Center Post
72	**3.750** 95.25	**1.750** 44.45	**4.540** 115.32	**.115** 2.92	822134-3	822110-3	822330-3	822137-3	822097-3	822138-3
				.140 3.56	—	822469-3	—	—	—	—
80	**4.150** 105.41	**1.950** 49.53	**4.940** 125.48	**.115** 2.92	822134-4	—	—	—	—	—
				.140 3.56	—	822469-4	—	—	—	—

Products for Industrial & Commercial Applications
Dimensions are shown for reference purposes only.
Dimensions are in inches and millimeters unless otherwise specified. Values in brackets are metric equivalents.
Specifications subject to change.
Technical Support Center
1-800-522-6752
www.tycoelectronics.com

Product Facts

- **Accepts module boards in a thickness range of .047-.054 [1.19-1.37] to allow the use of JEDEC standard boards**
- **Polarized posts on socket provide a means of properly orienting the socket on the pc board**
- **Pin 1 indicator in the socket orients the module board to the socket**
- **.050 [1.27] centerline sockets offer three profile heights — .125 [3.18], .160 [4.06] and .250 [6.35] to allow the use of single- and dual-sided boards, and the placement of components beneath the module board if required**
- **Very low insertion force for easy module insertion**
- **Metal latches provide superior strength**
- **Center post on .050 [1.27] product provides retention in the pc board through the soldering process**
- **Recognized under the Component Program of Underwriters Laboratories Inc., File E28476**
- **Certified by Canadian Standards Association File No. LR 7189**



Tyco Electronics developed the SIMM II Right Angle Sockets for interfacing Single In-Line Memory Module (SIMM) boards horizontally to the pc board while using a traditional cam-in approach. Available in .050 [1.27] centerline with gold and tin plating options, the sockets are designed to accept the JEDEC standard pc board thickness range of .047-.054 [1.19-1.37].

In order to allow for many different customer designs, the .050 [1.27] centerline sockets are available in three card slot heights — .125 [3.18], .160 [4.06] and .250 [6.35]. This multi-height capability allows customers to use single- or dual-sided module boards while providing the lowest overall height for packaging. The .125 [3.18] height version provides an extremely low profile interface while maintaining easy insertion and extraction within restricted packaging specifications.

A very low insertion force is required to install the module board. To install, simply angle the module into the socket card slot, then pivot the module board into position where it is secured by the locking latches.

The housing is made from liquid crystal polymer (LCP), assuring strong durable ramps. The latches for the .125 [3.18] height versions are made from LCP while all other versions have metal latches. Polarizing posts coincide with mounting holes in the pc board to prevent misinsertion.

Performance Characteristics:

Current Rating — 1 ampere max.

Termination Resistance (Dry Circuit) — 20 milliohms max. (initial)

Dielectric Withstanding Voltage — 1 KVAC

Insulation Resistance — 10,000 megohms min. (initial)

Operating Temperature — -55°C to +85°C continuous, +105°C peak

Durability — 25 cycles min.

Technical Documents:

Product Specification
108-1297

Application Specification
114-1060

Products for Industrial & Commercial Applications

Dimensions are shown for reference purposes only.

Dimensions are in inches and millimeters unless otherwise specified. Values in brackets are metric equivalents.

Specifications subject to change.

Technical Support Center
1-800-522-6752
www.tycoelectronics.com

.050 [1.27] Centerline

Material and Finish:

Housing — Liquid Crystal Polymer (LCP), glass filled, UL 94V-0

Contacts — Phosphor bronze with .000150 [0.0038] min. thick tin-lead over .000050 [0.00127] min. thick nickel or Duplex .000030 [0.00076] min. thick gold on contact area and .000150 [0.0038] min. thick tin-lead on solder tails, all over .000050 [0.00127] min. thick nickel

Latch — Brass with nickel plate on .160 [4.06] and .250 [6.35] height versions and LCP on .125 [3.18] version

Card Slot Height G	Dimensions H	Dimensions J
.125 3.18	**.325** 8.26	**.304** 7.72
.160 4.06	**.360** 9.14	**.339** 8.61
.250 6.35	**.450** 11.43	**.429** 10.90

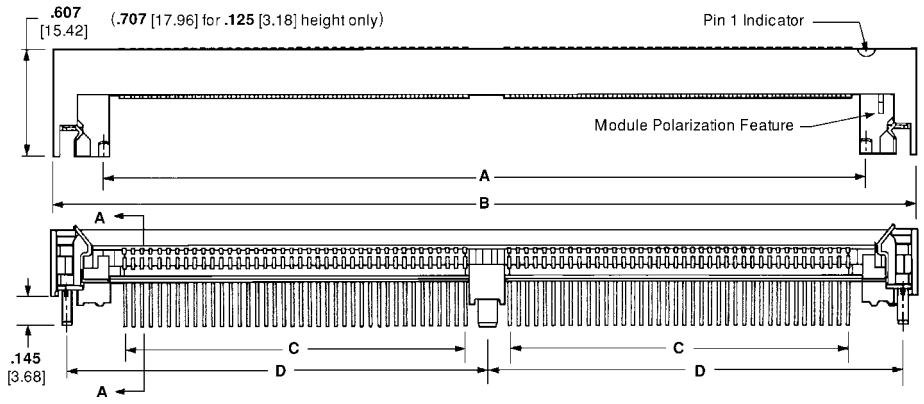

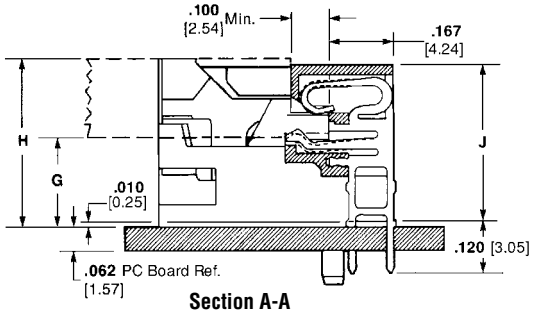

Section A-A

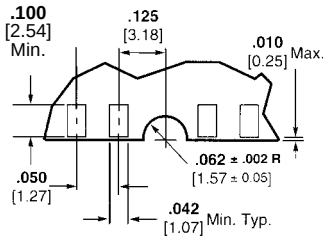

Detail Y

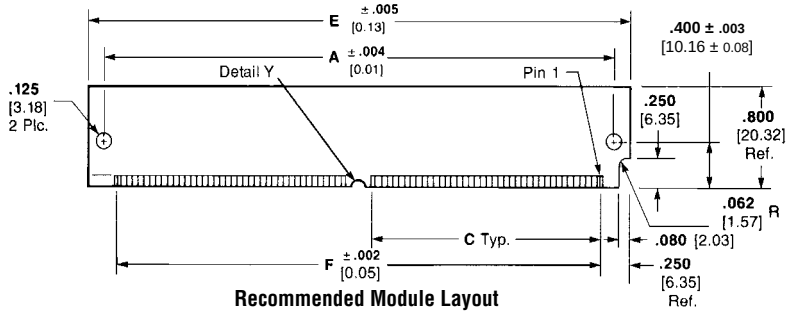

Recommended Module Layout

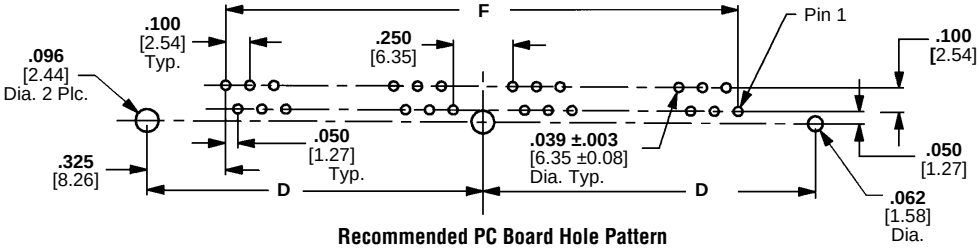

Recommended PC Board Hole Pattern

No. of Positions	Dimensions A	B	C	D	E	F	.125 [3.18] Height[1] Gold Plate	.160 [4.06] Height[2] Tin Plate	.160 [4.06] Height[2] Gold Plate	.250 [6.35] Height[2] Tin Plate	.250 [6.35] Height[2] Gold Plate
72	**3.984** 101.19	**4.550** 115.57	**1.750** 44.45	**2.200** 55.88	**4.250** 107.95	**3.750** 95.25	7-382481-2	7-382482-2	7-382483-2	7-382486-2	7-382487-2
80	**4.384** 111.35	**4.950** 125.73	**1.950** 49.53	**2.400** 60.96	**4.650** 118.11	**4.150** 105.41	—	—	—	8-382486-0	—

[1] Has plastic latches (plastic latches extend .707 [17.96] from back of housing).
[2] Has metal latches.
Note: Metal latch version shown for purposes of illustration.

Products for Industrial & Commercial Applications
Dimensions are shown for reference purposes only.
Dimensions are in inches and millimeters unless otherwise specified. Values in brackets are metric equivalents.
Specifications subject to change.
Technical Support Center 1-800-522-6752 www.tycoelectronics.com

Dual Read-Out Sockets for SDRAM and SGRAM

Product Facts

- Sockets Dual Read-Out SDRAM and SGRAM
- Cam-in module loading provides easy insertion
- Positive wipe on pads during module insertion
- Contact performance in excess of 100 MHz
- Increased lead-in geometry reduces insertion force
- Module stabilization features

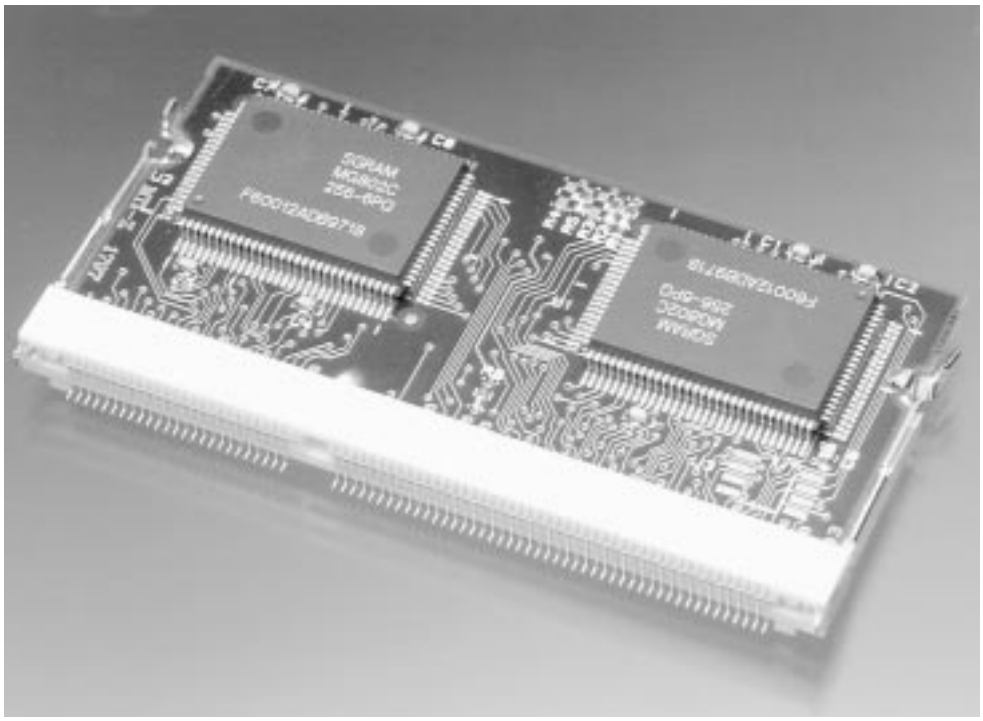

SO DIMM sockets are available in a 144-position dual read-out version for SDRAM (Synchronous Dynamic Random Access Memory) and a version for SGRAM (Synchronous Graphic Random Access Memory).

For use in Frame Buffer Memory applications, where height off the board is important, this socket is ideal because of its right angle, low vertical height design.

Sockets use 0.8mm centerline technology to provide more than triple the density of standard SIMM sockets and provide highly reliable, low cost, space saving benefits. Easy aligning, cam-in module loading and dual locking levers provide for simple do-it-yourself upgrades.

The SDRAM version is available in four card slot heights of 2.1mm [.083 in.], 3.3mm [.130 in.], 3.7mm [.146 in.] and 8.0mm [.315] for 3.3V power supplies.

The SGRAM version is available in two card slot heights; 3.7mm [.146] and 8.0 [.315] for 3.3V power supplies. Hard tray and tape-and-reel packaging are available for automatic placement. Contact Tyco Electronics for part number availability.

Performance Characteristics:

Operating Temperature — -55°C to +105°C

Termination Resistance (Dry Circuit) — 30 milliohms max., initial ΔR=20 milliohms max., final

Dielectric Strength — 1.0 KVAC

Insulation Resistance — 10,000 megohms min.

Durability — 25 cycles

PCB Mating Force — 59.8 N [13.44 lb] max., initial

Technical Documents:

Product Specification
108-1739

Dual Read-Out for SDRAM Memory Modules

144 Positions — 0.8 mm SO DIMM

Material and Finish:

Housing — Nylon, UL94V-0 rated; color: natural

Contact — Phosphor bronze with 0.00025 mm [.0000098 in.] min. thick gold over 0.001 mm [.0000393 in.] min. thick nickel in contact area and gold flash over 0.001 mm [.0000393 in.] min. thick nickel in soldering area.

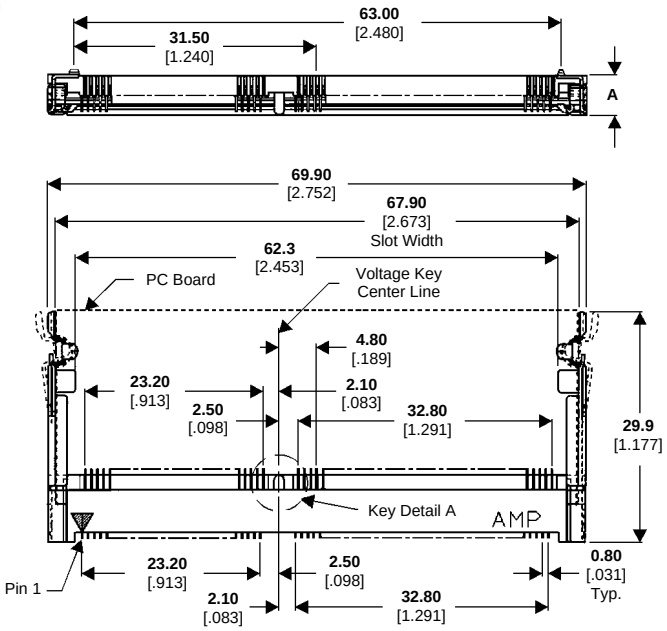

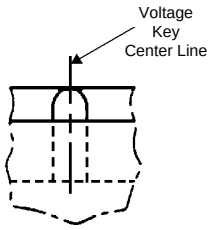

Key Type A

Housing Style	Dim. A	Power Supply: 3.3 Volt Key Type A
Standard	**5.20** .205	390113-1
Low-Profile	**4.00** .157	390114-1
High-Profile	**5.60** .220	390112-1
Ultra-High	**9.90** .390	390322-1

Dual Read-Out for SGRAM Memory Modules

144 Positions — 0.8 mm SO DIMM

Material and Finish

Housing — Nylon, UL94V-0 rated; color: natural

Contact — Phosphor bronze with 0.00025 mm [.0000098 in.] min. thick gold over 0.0013-0.004 mm [.000051-.000157 in.] thick nickel in contact area and 0.0033-0.0064mm [.000150-.000250 in. thick tin-lead over 0.0013-0.004 mm [.000051-.000157 in.] thick nickel in soldering area.

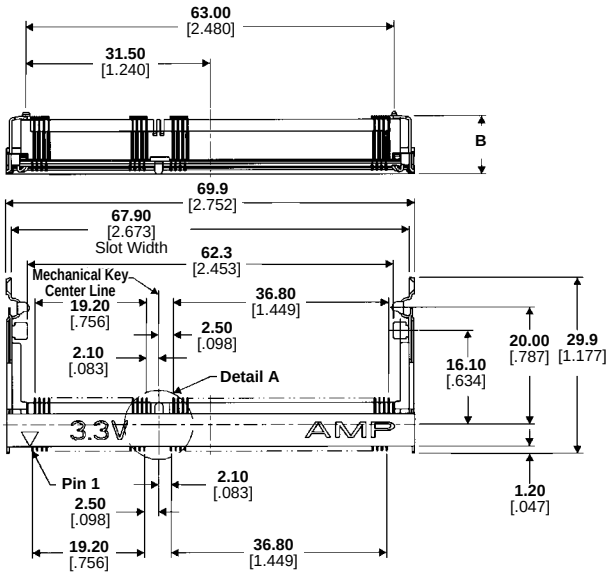

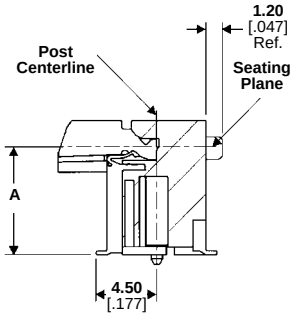

Section X-X

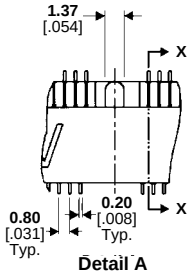

Detail A

Dimensions A	Dimensions B	Part Numbers
8.00 .315	**9.90** .390	390110-1
3.70 .146	**5.60** .220	390111-1

For complete product information, order Catalog 1307767

Products for Industrial & Commercial Applications

Dimensions are shown for reference purposes only.

Dimensions are in inches and millimeters unless otherwise specified. Values in brackets are metric equivalents.

Specifications subject to change.

Technical Support Center
1-800-522-6752
www.tycoelectronics.com

Dual Read-Out for 8 Byte Memory Modules

Product Facts

- **Sockets Dual Read-Out 8-Byte DRAM DIMM boards for 64-bit data bus**
- **Staggered contact heights to reduce module insertion force**
- **Enhanced built-in lever-type module extractors**
- **Contact performance in excess of 100 MHz**
- **Multiple keying possibilities**
- **Socket-to-board hold-down features available**
- **Applicable to PC-100 & PC-133 Modules**
- **Recognized under the Component Program of Underwriters Laboratories Inc., File E28476**
- **Certified by Canadian Standards Association File No. LR 7189**

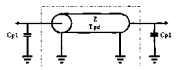

AMP Single Line and MultiLine Models are available for DIMM II Sockets at www.amp.com/simulation or email at modeling@tycoelectronics.com

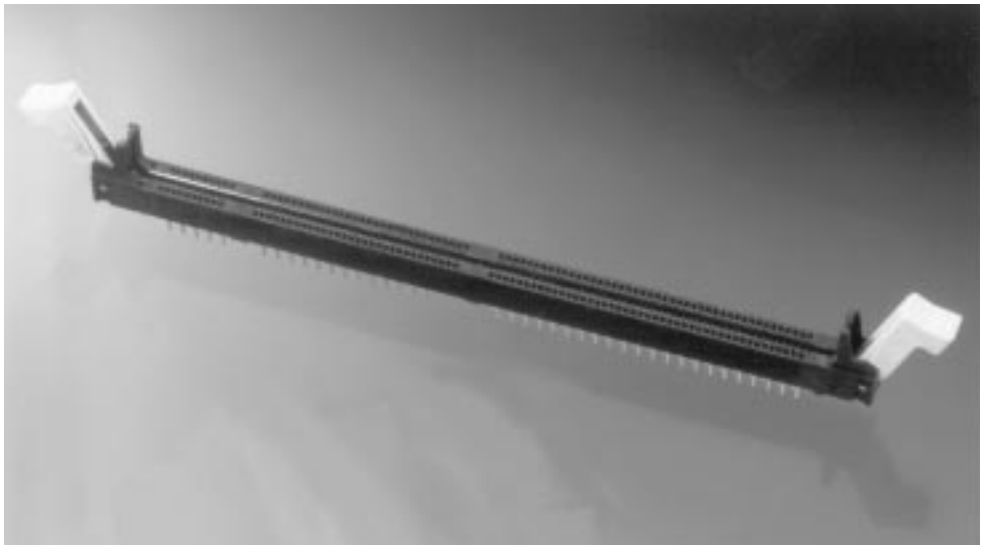

Available from Tyco Electronics is a family of DIMM sockets for 8-Byte DRAM Dual In-Line Memory Module technology.

The two-key[1] sockets are designed for 168-pin modules per JEDEC Standard MO-161. These sockets accept Standard Buffered DRAM, Synchronous DRAM and Non-Standard (Non-Buffered) DRAM modules in 5, 3.3 and future X.X volt versions. Advanced design keying provides damage protection for these various voltages.

The sockets provide twice the density of standard SIMM sockets while staying within present-day 1.27 [.050] centerline technology. In other words, the resultant pin I/O count is the same as if we were able to use 0.64 [.025] centerline spacing. The sockets have been designed to provide highly reliable, low-cost space saving benefits.

These sockets and modules provide increased memory capacity offered by 8 Byte DRAM for a 64-bit data bus. With module memory capacities that range from 2 MBytes to 512 MBytes, this module/socket combination is ideal for today's high end personal computers and work stations.

DIMM IIP (Performance Family) sockets are now available in some versions of 3.3 Volt Std. DRAM and Non-Std. (Non-Buffered) DRAM. See page 5029 for cross reference. For more information contact Tyco Electronics.

[1] A one-key version is also available.

Performance Characteristics:

Current Rating — .5 ampere per contact

Operating Temperature — -55°C to +105°C

Termination Resistance (Dry Circuit) — 20 milliohms max., initial

Dielectric Withstanding Voltage — 1.0 KVAC

Insulation Resistance — 10,000 megohms min., initial

Durability — 25 cycles min.

Mating Force — 4 oz. [1.112 N] max. per contact, initial

Technical Documents:

Product Specification
108-1582

Application Specification
114-1107

Vertical Dual Read-Out for 8 Byte Memory Modules

168 Positions — JEDEC MO-161

(Top view dimensions are the same for all variations.)

Base Part Numbers
390074
390168

See table below showing complete part numbers.

Base Part Numbers
390215
390240

See table below showing complete part numbers.

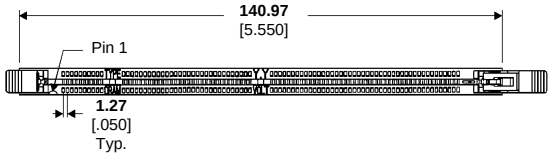

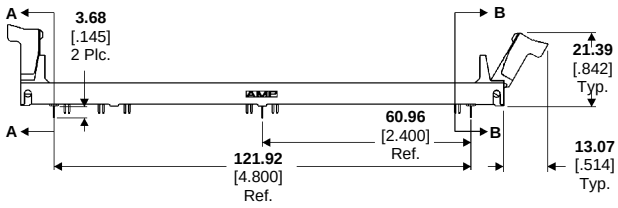

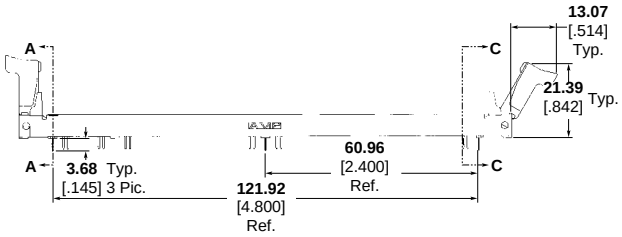

Material and Finish

Housing & Ejector— High temperature thermoplastic
Contact — Phosphor bronze with gold flash over 0.00051 [.000020] min. thick palladium-nickel over 0.00127 [.000050] min. thick nickel in contact area or 0.00381 [.000150] min. thick tin-lead over 0.00127 [.000050] min. thick nickel in soldertail area.

Module Keying Details

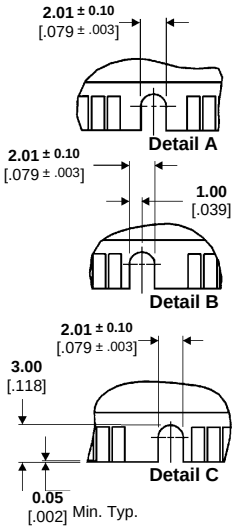

Cross Sections

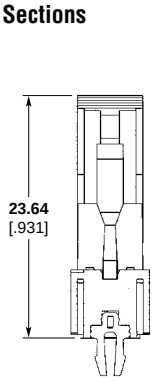

Section A-A

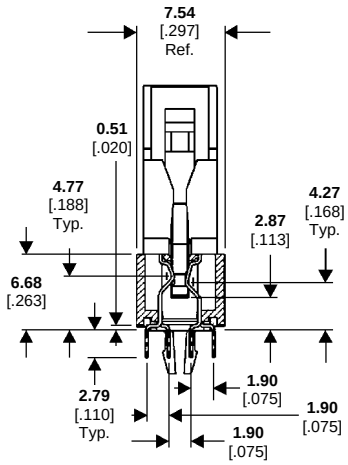

Section B-B

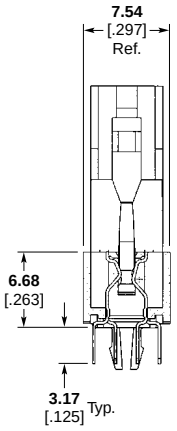

Section C-C

Part Numbers		
Std. DRAM	Sync. DRAM	Non-Std. (Non-Buff.) DRAM
3.3 Volt	3.3 Volt	3.3 Volt
Key 1 = A Key 2 = A	Key 1 = B Key 2 = A	Key 1 = C Key 2 = A
390074-4[1]	390074-5	390074-6[1]
390215-4[1]	390215-5[1]	390215-6[1]
390040-4[2]	390040-5[2]	390040-6[2]

Note: [1] DIMM IIP (Performance Family) product available as replacement for these part numbers. See cross reference. Consult Tyco Electronics for additional information.
[2] Has plastic retention posts in place of metal boardlocks.

Cross Reference — Standard to DIMM IIP Sockets

Standard	DIMM IIP
390074-4	390168-4
390074-6	390168-1
390215-4	390240-4
390215-6	390240-1

For complete product information, order Catalog 1307767

Products for Industrial & Commercial Applications
Dimensions are shown for reference purposes only.
Dimensions are in inches and millimeters unless otherwise specified. Values in brackets are metric equivalents.
Specifications subject to change.
Technical Support Center
1-800-522-6752
www.tycoelectronics.com

Right Angle Dual Read-Out for 8 Byte Memory Modules

Product Facts

- **Low profile design**
- **Three profile heights**
- **Standard and reverse footprints**
- **Three solder tail length options**
- **3.3 volts**

Material and Finish

Housing — High Temperature Nylon

Contact — Phosphor Bronze

Contact area — .0000003 [0.0000076] min. thick gold flash over .000020 [0.00051] min. thick palladium nickel over .000050 [0.000127] min. thick nickel

Solder tail — .000150 [0.0038] min. thick tin lead over .00064 [0.0163] min. thick nickel

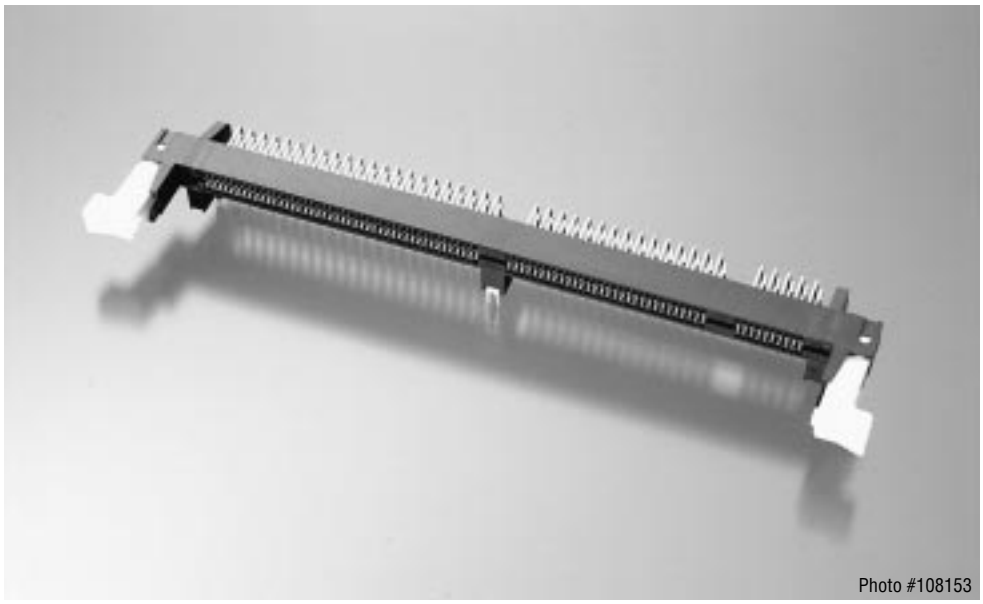

Photo #108153

These 168 position sockets are designed to connect the DIMM II module, which is made to JEDEC specification MO-161, to the motherboard. It accepts an 8 byte DRAM DIMM module in 64 bit data bus applications. The 1.27mm [.050] pitch style accommodates a module printed circuit board thickness of 1.27mm [.050].

Electrical Characteristics:

Voltage Rating — 30 VAC max.

Current — .5 amp max.

Operating Temperature Range — -55° to +105°C

Dielectric Withstanding Voltage — 1000 VAC

Contact Resistance — 30 milliohms max.

Technical Documents:

Product Specification
108-1756

Application Specification
114-1119

Right Angle Dual Read-Out for 8 Byte Memory Modules

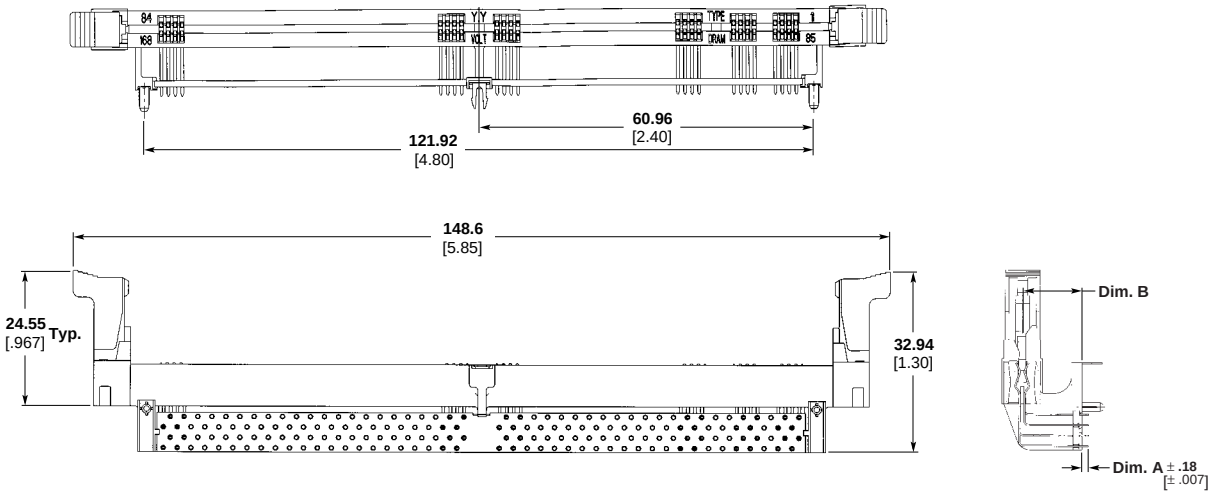

DRAM Type	Footprint	Tail Length (Dim. A)	Housing Height (Dim. B)	Part Number
Standard DRAM (buffered)	Standard, with center barb	**3.18** .125	**10.92** .430	390175-4
	Standard, with center barb	**1.96** .077	**9.27** .365	1-390175-4
	Standard, with center barb	**2.84** .112	**7.11** .280	2-390175-4
	Reverse, with center barb	**3.18** .125	**10.92** .430	1-390171-4
	Standard, without center barb	**1.96** .077	**9.27** .365	390172-4
	Standard, without center barb	**2.84** .112	**9.27** .365	1-390172-4
Sync DRAM	Standard, with center barb	**3.18** .125	**10.92** .430	390175-5
	Standard, with center barb	**1.96** .077	**9.27** .365	1-390175-5
	Standard, with center barb	**2.84** .112	**7.11** .280	2-390175-5
	Reverse, with center barb	**3.18** .125	**10.92** .430	1-390171-5
	Standard, without center barb	**1.96** .077	**9.27** .365	390172-5
	Standard, without center barb	**2.84** .112	**9.27** .365	1-390172-5
NB DRAM (non-buffered)	Standard, with center barb	**3.18** .125	**10.92** .430	390175-6
	Standard, with center barb	**1.96** .077	**9.27** .365	1-390175-6
	Standard, with center barb	**2.84** .112	**7.11** .280	2-390175-6
	Reverse, with center barb	**3.18** .125	**10.92** .430	1-390171-6
	Standard, without center barb	**1.96** .077	**9.27** .365	390172-6
	Standard, without center barb	**2.84** .112	**9.27** .365	1-390172-6

For complete product information, order Catalog 1307767

Products for Industrial & Commercial Applications

Dimensions are shown for reference purposes only.

Dimensions are in inches and millimeters unless otherwise specified. Values in brackets are metric equivalents.

Specifications subject to change.

Technical Support Center
1-800-522-6752
www.tycoelectronics.com

25° Angular

Product Facts

- **Low profile design**
- **Metal board hold-downs**
- **Accommodates EDO DRAM and SDRAM modules**
- **3.3 volts**
- **Applicable to PC-100 & PC-133 modules**
- **Recognized under the Component Program of Underwriters Laboratories Inc., File E28476**
- **Certified by Canadian Standards Association File No. LR 7189**

Material and Finish:

Housing and Ejector — High Temperature Nylon

Contact — Phosphor Bronze

Contact area — .000003 [0.000076] min. thick gold flash over .000020 [0.00051] min. thick palladium nickel over .000050 [0.00127] min. thick nickel

Solder tail — .000150 [0.0038] min. thick tin lead over .000025 [0.00064] min. thick nickel

Technical Documents:

Product Specification
108-1801

Application Specification
114-1118

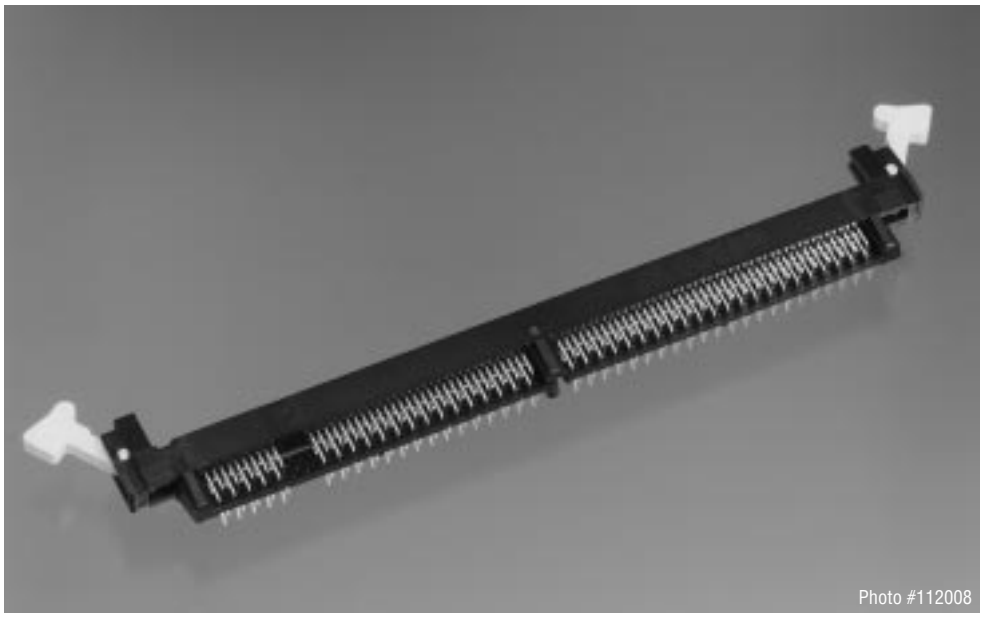

Photo #112008

These 168 position sockets are designed to connect EDO DRAM and SDRAM modules to the motherboard. The connector allows the module to be slanted at 25° from the motherboard, thereby lowering the total vertical dimension. Plastic alignment posts allow for easy insertion and improved stability during module insertion, while metal hold-downs eliminate bowing. Positive locking extractors accommodate larger modules.

DRAM Type	Tail Length (Dim. A)	Part Numbers	
		Center Plastic Post	Center Metal Board Lock
Standard DRAM (buffered)	**2.62** .103	390170-4	390195-4
	3.18 .125	390185-4	—
Sync DRAM	**2.62** .103	390170-5	390195-5
	3.18 .125	390185-5	—
NB DRAM (non-buffered)	**2.62** .103	390170-6	390195-6
	3.18 .125	390185-6	—

For vertical DIMM IIP sockets, see page 5029.

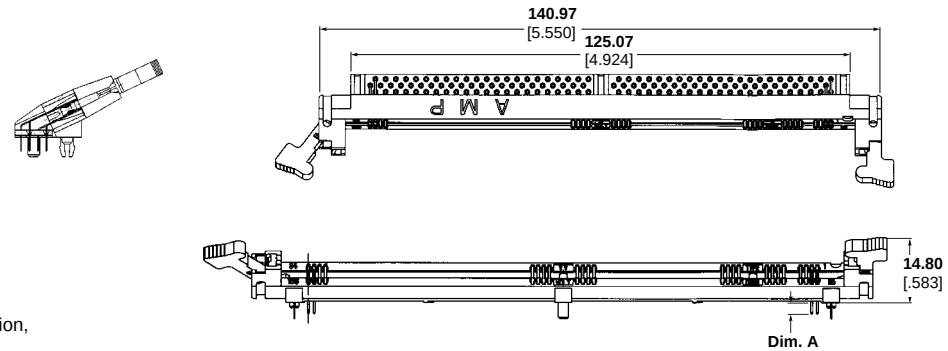

For complete product information, order Catalog 1307767

Product Facts

- **Low profile — only 4.6 [.181] max.* for high density pc board stacking**
- **Compatible footprint allows for socket or direct mounting**
- **Housing slots accept extraction tool for easy PLCC removal**
- **Corner chamfer for PLCC orientation**
- **Available loose piece or tape mounted**
- **Plastic standoffs provide clearance for heat dissipation and cleaning operations**
- **Housings will withstand high temperature soldering**
- **Open bottom housing for convenient placement of socket on pattern, 100% inspection of solder joint, and penetration of heat source to the solder pad and surface mount contact**
- **Top contact slots allow test probing with PLCC device in place**
- **Recognized under the Component Program of Underwriters Laboratories Inc., File No. E28476**
- **Certified by Canadian Standards Association File LR 7189A-97**

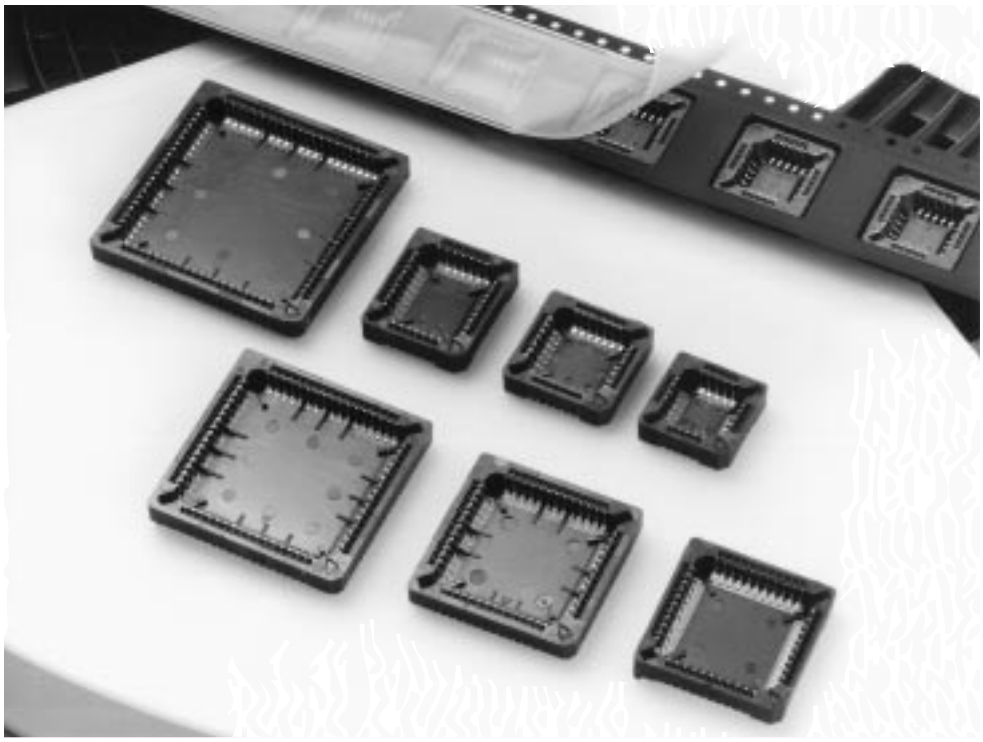

The AMP family of Low Profile Plastic Leaded Chip Carrier (PLCC) Sockets for surface mounting is designed to accommodate Plastic "J" leaded, tin plated devices made to JEDEC Specifications MS-018 (square packages) and MS-016-AE (rectangular packages).

Available in 20, 28, 32, 44, 52, 68 and 84 positions, these sockets feature high normal force contacts made from phosphor bronze material with tin-lead over nickel plating. Sockets feature a one-piece housing that will withstand vapor-phase, I.R. or convection reflow soldering temperatures and prevent flux and solvent entrapment.

The low profile housing is only 4.6 [.181] high, maximum* allowing high density printed circuit board stacking. The open bottom design enables easy socket placement on the pc board footprint pattern facilitates inspection as well as permitting the heat source to penetrate to the solder pad and surface mount contact. The socket uses the same footprint pattern as the chip carrier.

Sockets are also available on embossed tape made to EIA Standard 481 which allows interchangeability of tape in commercially available pick-and-place equipment.

Small Outline Low Profile, Surface Mount

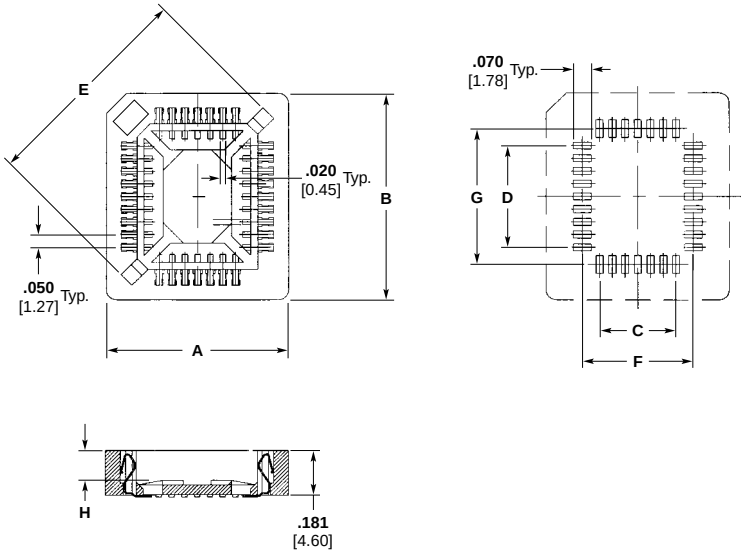

Number of positions	Dimensions								Tube		Tape/Reel		
	A	B	C	D	E	F	G	H	Part Number	Quantity per Carton	Part Number	Size Tape	Quantity per Carton
20	**.364** 14.36	**.364** 14.36	**.200** 5.08	**.200** 5.08	**.645** 16.38	**.334** 8.48	**.334** 8.48	**.108** 2.75	822499-3	8,580	3-822499-3	24mm	5,000
28	**.664** 16.90	**.664** 16.90	**.300** 7.62	**.300** 7.62	**.790** 20.00	**.434** 11.02	**.434** 11.02	**.108** 2.75	822499-2	7,260	3-822499-2	24mm	4,000
32	**.664** 16.90	**.767** 19.50	**.300** 7.62	**.400** 10.16	**.861** 21.89	**.434** 11.02	**.534** 13.56	**.102** 2.60	822498-1	6,380	3-822498-1	32mm	4,000
44	**.866** 22.00	**.866** 22.00	**.500** 12.70	**.500** 12.70	**1.07** 27.20	**.634** 16.10	**.634** 16.10	**.116** 2.95	822499-1	4,160	3-822499-1	44mm	2,100

WITHDRAWAL TOOL FOR PLCC'S

The PCS Series Extraction Tool is designed for the removal of JEDEC dimensioned "J" leaded 4-sided plastic leaded chip carrier with leads on .050" (12,7) centers. A "Universal" tool, it is compatible with most competitor's PLCC sockets.



TX 8136-20/84 PCS

FEATURES:

- Fits all sizes : 20 thru 84 positions
- Positive engagement and tool action assures smooth, level extraction of device
- Spring assisted release of device from tool after extraction

OPERATION:

1. Holding tool between thumb and 1st or 2nd finger at ribbed area of legs. Expand or contract legs to engage tongs in extraction slots of socket.
2. Push tool down to insure legs seat flush with the top of the socket. This will assure extraction tongs are properly positioned under device.
3. Squeeze legs between thumb and finger. Tool action will extract device in smooth positive motion.
4. Relaxing pressure on legs releases device from tool.

For complete product information, order Catalog 1307767

Products for Industrial & Commercial Applications
Dimensions are shown for reference purposes only.
Dimensions are in inches and millimeters unless otherwise specified. Values in brackets are metric equivalents.
Specifications subject to change.
Technical Support Center
1-800-522-6752
www.tycoelectronics.com

Industry Standard Low Profile, Surface Mount

Materials and Finish

Housing — Thermoplastic, UL 94V-0 rated

Contacts — Phosphor bronze with 0.00254 [.000100] 90/10 Tin-lead over 0.00127 [.000050] min. nickel all over

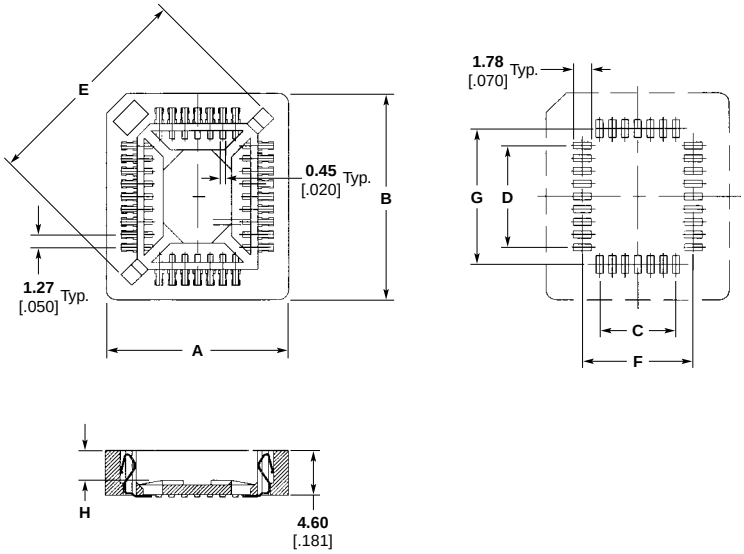

No. of Pos.	Dimensions								Tube		Tape/Reel		
	A	B	C	D	E	F	G	H	Part No.	Quantity Per Carton	Part No.	Size Tape	Quantity Per Carton
20	**15.58** .613	**15.58** .613	**5.08** .200	**5.08** .200	**16.38** .645	**8.48** .334	**8.48** .334	**2.75** .108	822472-1	11700	3-822472-1	24mm	5000
28	**18.12** .713	**18.12** .713	**7.62** .300	**7.62** .300	**20.00** .790	**11.02** .434	**11.02** .434	**2.75** .108	822472-2	9900	4-822472-2	32mm	4000
32	**18.12** .713	**20.66** .813	**7.62** .300	**10.16** .400	**21.89** .861	**11.02** .434	**13.56** .534	**2.60** .102	822472-3	8700	3-822472-3	32mm	4000
44	**23.20** .913	**23.20** .913	**12.70** .500	**12.70** .500	**27.20** 1.07	**16.10** .634	**16.10** .634	**2.90** .114	822472-4	6240	3-822472-4	44mm	2100
52	**25.74** 1.01	**25.74** 1.01	**15.24** .600	**15.24** .600	**30.78** 1.21	**18.64** .734	**18.64** .734	**2.75** .108	822472-5	3220	3-822472-5	44mm	2100
68	**30.82** 1.21	**30.82** 1.21	**20.32** .800	**20.32** .800	**37.98** 1.50	**23.72** .934	**23.72** .934	**2.90** .114	822472-6	3420	3-822472-6	44mm	1800
84	**35.90** 1.41	**35.90** 1.41	**25.40** 1.00	**25.40** 1.00	**45.20** 1.78	**28.80** 1.13	**28.80** 1.13	**2.90** .114	822472-7	2346	3-822472-7	56mm	1000

Thru-Hole

PCS Series



PCS-068A-1

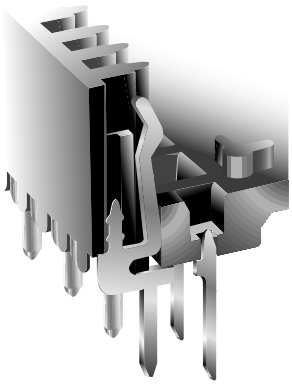

FEATURES:

The PCS Series Chip Carrier sockets accepts Jedec Type "A" plastic leaded chip carriers on .050" (1.27) centers. These dependable sockets combine positive retention of the package with high normal force to insure outstanding electrical and mechanical performance. The solder tail design allows through-hole board patterns on .100" (2.54) grid.

- High Normal force, 200 grams (7.1 oz.) min.
- Internal standoff insures proper positioning of chip carrier in socket
- Visual aids external to socket assure easy registration to printed wiring board
- Easy access for probing installed chip carrier
- Standoffs and four drain holes aid in cleaning
- PLCC Extraction Tool TX8136-20/84 PCS, see page 5034
- Accepts JEDEC PLCC's MO-047 AA-AH (20-84), MO-052 AE (32 RECT)
- Recognized under the Component Program of Underwriters Laboratories, Inc. file no. E111362

MATERIAL SPECIFICATIONS:

Insulator.....PPS, UL rated 94V-0
Contact .....Phosphor bronze
Plating .....Tin/lead

PERFORMANCE SPECIFICATIONS:

MECHANICAL

Vibration .....Passed MIL-STD-1344, Method 2005.1, Condition II, 10 G's
Shock.....Passed MIL-STD-1344, Method 2004.1, Condition A, 50 G's
Durability .....50 Cycles minimum
Normal Force .....200 Grams (7.1 oz.) minimum when mated to nominal size PLCC device
Mating Force.....310 Grams (11.0 oz.) per line maximum when mated to maximum size PLCC device
Unmating Force.....31 Grams (1.1 oz) per line minimum when mated to minimum size PLCC device
Solderability .....Passed MIL-STD-202, Method 208
Contact Retention in Plastic .....2.0 Lbs. per line minimum

ELECTRICAL

Contact Resistance .....30 Milliohms max.
Contact Rating.....1 Amp
Capacitance .....1 pF max. @ 1 kHz, MIL-STD-202, Method 305 (contact to contact)
Insulation Resistance.....1 x 10^4 Megohms per MIL-STD-1344, Method 3003.1
Dielectric Withstanding Voltage .....600 VAC per MIL-STD-1344, Method 3001.1

ENVIRONMENTAL

Humidity .....Passed MIL-STD-1344, Method 1002.2, Type II
Operation Temperature ....-55°C to +105°C

Thru-Hole

PCS Series

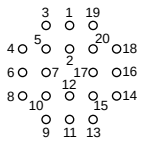

20 Position

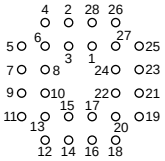

28 Position

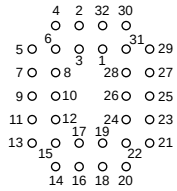

32 Position

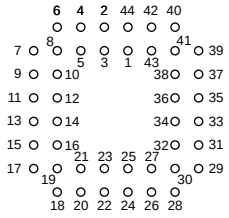

44 Position

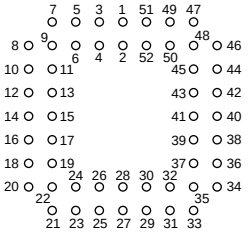

52 Position

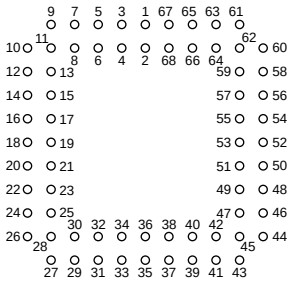

68 Position

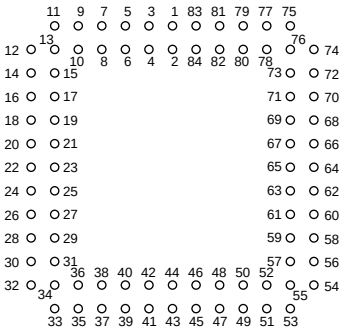

84 Position

Recommended Hole Layout
Viewed from the Top of Socket
Tolerance ±.002 Unless Otherwise Noted

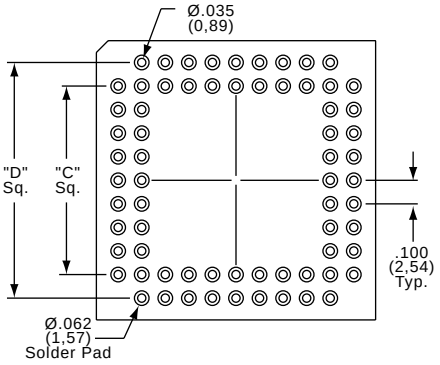

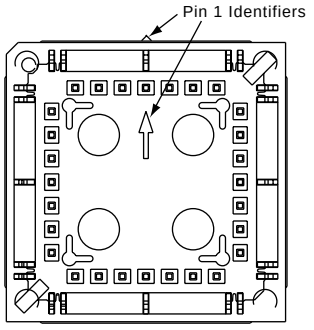

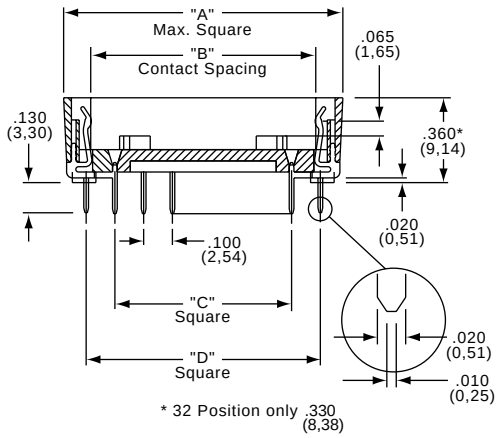

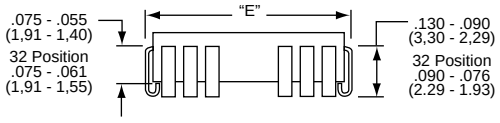

STANDARD CONFIGURATIONS

Part Number	Number of Contacts	A	B*	C	D	E
PCS-020A-1	20	.590 (14,98)	.360 (9,14)	.200 (5,08)	.400 (10,16)	.395/.385 (10,03/9,78)
PCS-028A-1	28	.690 (17,52)	.460 (11,68)	.300 (7,62)	.500 (12,70)	.495/.485 (12,57/12,32)
PCS-044A-1	44	.890 (22,60)	.660 (16,76)	.500 (12,70)	.700 (17,78)	.695/.685 (17,65/17,40)
PCS-052A-1	52	.990 (25,15)	.760 (19,30)	.600 (15,24)	.800 (20,32)	.795/.785 (20,19/19,94)
PCS-068A-1	68	1.190 (30,22)	.960 (24,46)	.800 (20,32)	1.000 (25,40)	.995/.985 (25,27/25,02)
PCS-084A-1	84	1.390 (35,31)	1.160 (29,54)	1.000 (25,40)	1.200 (30,48)	1.195/1.185 (30,35/30,10)

* Dimension **B** ± .010 (0,25)

32 POSITION RECTANGULAR

Part Number	Number of Contacts	A		B *		C		D		E	
		Long Side	Short Side	Long Side	Short Side	Long Side	Short Side	Long Side	Short Side	Long Side	Short Side
PCS-032A-1	32	.790 (20,07)	.690 (17,53)	.564 (14,33)	.464 (11,79)	.400 (10,16)	.300 (7,62)	.600 (15,24)	.500 (12,70)	.595/.585 (15,11/14,86)	.495/.485 (12,57/12,32)

* Dimension **B** ± .010 (0,25)

Note: Before ordering, see Cross Reference in Section 15 for equivalent Tyco Electronics Part Number.

For complete product information, order Catalog 1308409

Products for Industrial & Commercial Applications
Dimensions are shown for reference purposes only.
Dimensions are in inches and millimeters unless otherwise specified. Values in brackets are metric equivalents.
Specifications subject to change.
Technical Support Center
1-800-522-6752
www.tycoelectronics.com

Thru-Hole, Economy

Material and Finish:

Housing — Thermoplastic UL94V-0
Contacts — Phosphor bronze with tin-lead over nickel

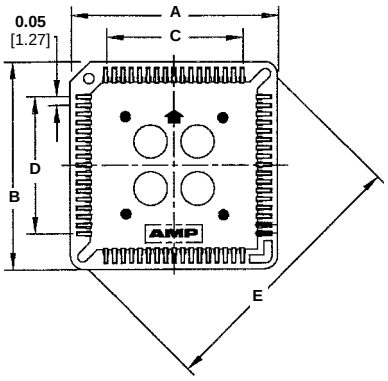

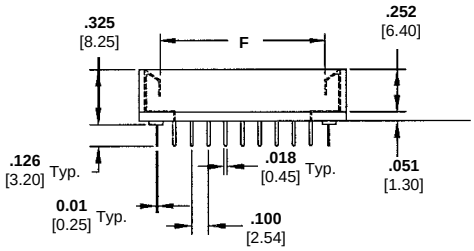

Positions	Dimensions						Part Numbers
	A	B	C	D	E	F	
20	**0.62** 15.56	**0.62** 15.56	**0.20** 5.08	**0.20** 5.08	**0.68** 17.20	**0.35** 8.90	822473-1
28	**0.71** 18.10	**0.71** 18.10	**0.30** 7.62	**0.30** 7.62	**0.82** 20.70	**0.45** 11.46	822473-2
32	**0.71** 18.10	**0.81** 20.54	**0.30** 7.62	**0.40** 10.16	**0.90** 22.65	**0.45** 11.36	822473-3
44	**0.92** 23.18	**0.92** 23.18	**0.50** 12.70	**0.50** 12.70	**1.08** 27.50	**0.66** 16.74	822473-4
52	**1.01** 25.72	**1.01** 25.72	**0.60** 15.24	**0.60** 15.24	**1.24** 31.50	**0.76** 19.30	822473-5
68	**1.21** 30.80	**1.21** 30.80	**0.80** 20.32	**0.80** 20.32	**1.54** 39.00	**0.96** 24.38	822473-6
84	**1.41** 35.88	**1.41** 35.88	**1.00** 25.40	**1.00** 25.40	**1.82** 46.15	**1.16** 29.42	822473-7

For complete product information, order Catalog 1308409

Products for Industrial & Commercial Applications

Dimensions are shown for reference purposes only.

Dimensions are in inches and millimeters unless otherwise specified. Values in brackets are metric equivalents.

Specifications subject to change.

Technical Support Center
1-800-522-6752
www.tycoelectronics.com

Standard

Product Facts

- .025 [0.64] centerline for high density, low cost packaging
- Low profile permits even higher density packaging with only .375 [9.53] maximum height pc boards
- High normal force and positive engagement allows for reliable service to minimize field failures
- Protective cover separates and safeguards IC leads during handling and insertion
- Closed-bottom housing aids in prevention of solder bridging between contacts
- Contacts absorb mating and reaction forces for board and housing protection
- Economical design makes socketing of semi-conductor devices more attractive
- .020 [0.51] minimum wipe contact insures reliability of tin-to-tin interface
- High temperature materials
- Sockets can be spaced a minimum of .150 [3.81] from each other

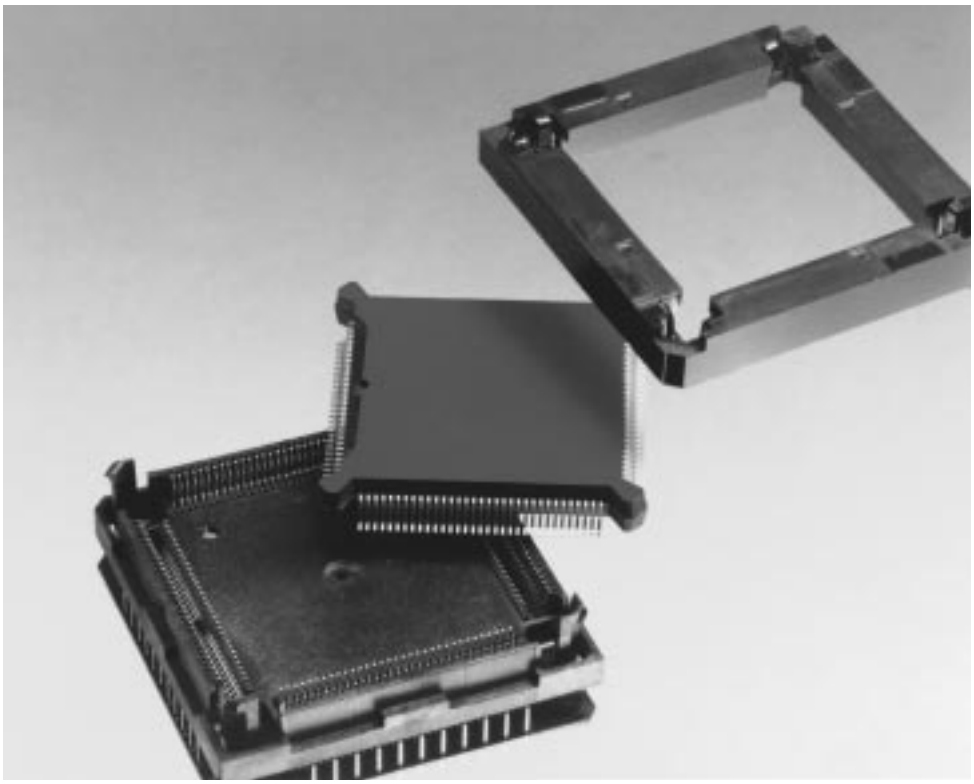

The two-piece design of the AMP socket eases the problems of handling the gullwing-leaded PQFP packages. The IC is first inserted into the plastic cover and then, using the insertion tool, the cover is secured over the socket housing to insert the chip into the socket. The completed assembly presents a low .375 [9.53] profile to permit close stacking of pc boards.

The cover, which is separately available, contains slots that not only protect and separate the leads, but also for proper lead-to-contact registration between chip and socket. In addition, the cover provides a rugged cost-effective method of protecting the PQFP IC during shipping, handling and assembly. Visual and mechanical polarization for proper orientation of cover and housing during mating, while spring latches in the four corners secure the cover to the housing.

Tin plated socket contacts provide a minimum .020 [0.51] wipe and exert a high normal force to the IC leads. The solder legs are arranged on a .075 x .100 [1.91 x 2.54] three-row grid to permit easy trace routing.

High-temperature housing materials and a sealed bottom allow the socket to withstand the rigors of flow soldering lines and other automated assembly. Standoffs ease flux cleaning.

Available in 100- and 132-position sizes, the socket features short leads and low capacitance, making it highly compatible with high-speed circuits.

Performance Characteristics:

Current Rating — 1 ampere max.

Operating Temperature — +55°C to +105°C

Dielectric Withstanding Voltage — 750 VAC min.

Capacitance (Adjacent Contacts) — 1 picofarad max.

Durability — 15 insertion/withdrawal cycles

Technical Documents:

Product Specification
108-1223

Application Specification
114-1070

Test Report
501-90

Instruction Sheets
408-3289 Hand Tools
408-9772 Pneumatic Tools

Products for Industrial & Commercial Applications

Dimensions are shown for reference purposes only.

Dimensions are in inches and millimeters unless otherwise specified. Values in brackets are metric equivalents.

Specifications subject to change.

Technical Support Center
1-800-522-6752
www.tycoelectronics.com

Standard

Materials and Finish:

Housing — High temperature thermoplastic, 94V-0 rated, black

Cover — Polyphenylene sulfide (PPS), 94V-0 rated, black

Contacts — Phosphor bronze with .000200 [0.00508] tin over .000050 [0.00127] nickel

Insertion Hand Tools

100 Position
Part Number 822253-1
132 Position
Part Number 822253-2



Extraction Tool

Part Number 822254-1



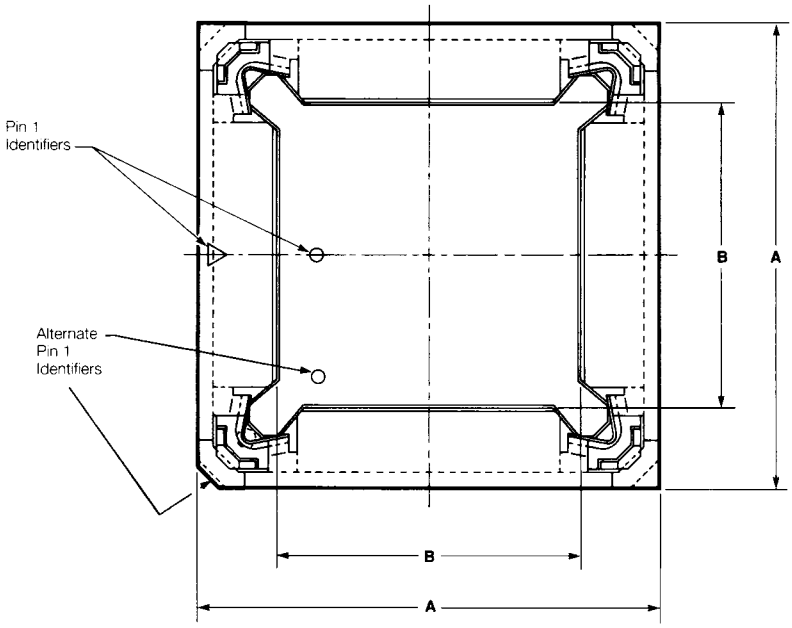

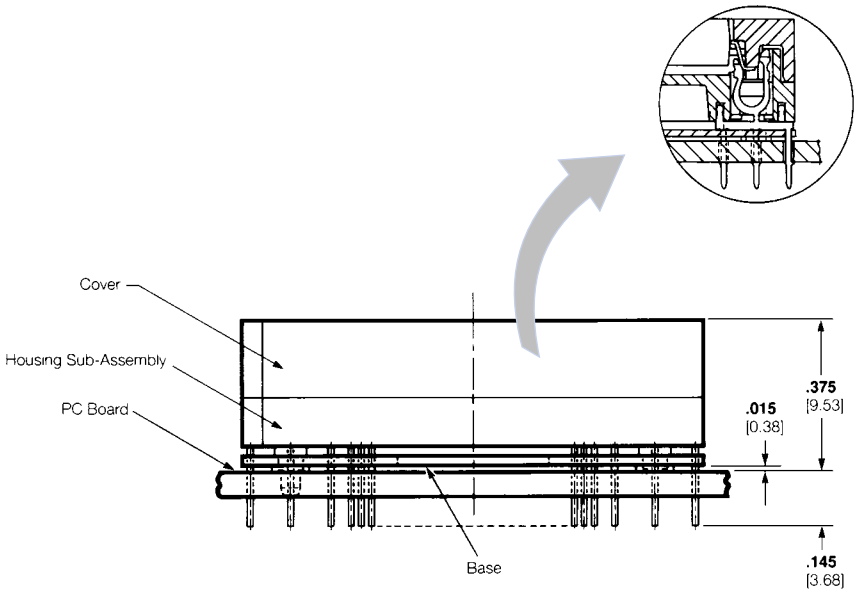

No. of Positions	Dimensions		Conventional AMP Sockets	Replacement for 3M TEXTOOL Sockets	
	A	B	Housing Sub-Assembly	Housing Sub-Assembly	Cover
100	**1.140** 28.96	**.750** 19.05	821949-4[1]	822064-4[2]	821939-1
132	**1.340** 34.04	**.950** 24.13	821949-5[1]	822064-5	821942-1

[1] Conventional footprint.
[2] Reverse footprint.

Packaging Quantities:
100 Position — 19 Pcs./Tube, 54 Tubes/Box, Total = 1026 Pcs./Box
132 Position — 16 Pcs./Tube, 45 Tubes/Box, Total = 720 Pcs./Box

Products for Industrial & Commercial Applications
Dimensions are shown for reference purposes only.
Dimensions are in inches and millimeters unless otherwise specified. Values in brackets are metric equivalents.
Specifications subject to change.
Technical Support Center
1-800-522-6752
www.tycoelectronics.com

Metric

JEDEC (EIAJ) Metric Quad Flat Pack ICs

Product Facts

- Closed bottom design prevents solder wicking and bridging
- Standoffs facilitate flushing of solder fluxes from under socket
- Horizontal normal force reduces the stress on latches
- Contact wiping removes oxides from package leads
- High pressure tin contacts provide high normal force for interface reliability
- Molded separation ribs for contact to lead alignment
- Components molded of high temperature materials
- Mechanical and visual polarization allows pin #1 alignment
- Cover provides means for handling and testing bumperless packages
- Cover secures device for handling regardless of corner configuration
- Socket design is not sensitive to package stand-off dimension
- Socketing eases prototype evaluation
- Socketing provides repairability in the field
- Socketing enables equipment configuration at the manufacturing level
- Socketing minimizes device damage problems due to SMT temperatures
- Socketing allows field updating
- Socketing utilizes conventional through-hole soldering processes
- Socket design is compatible with robotic assembly

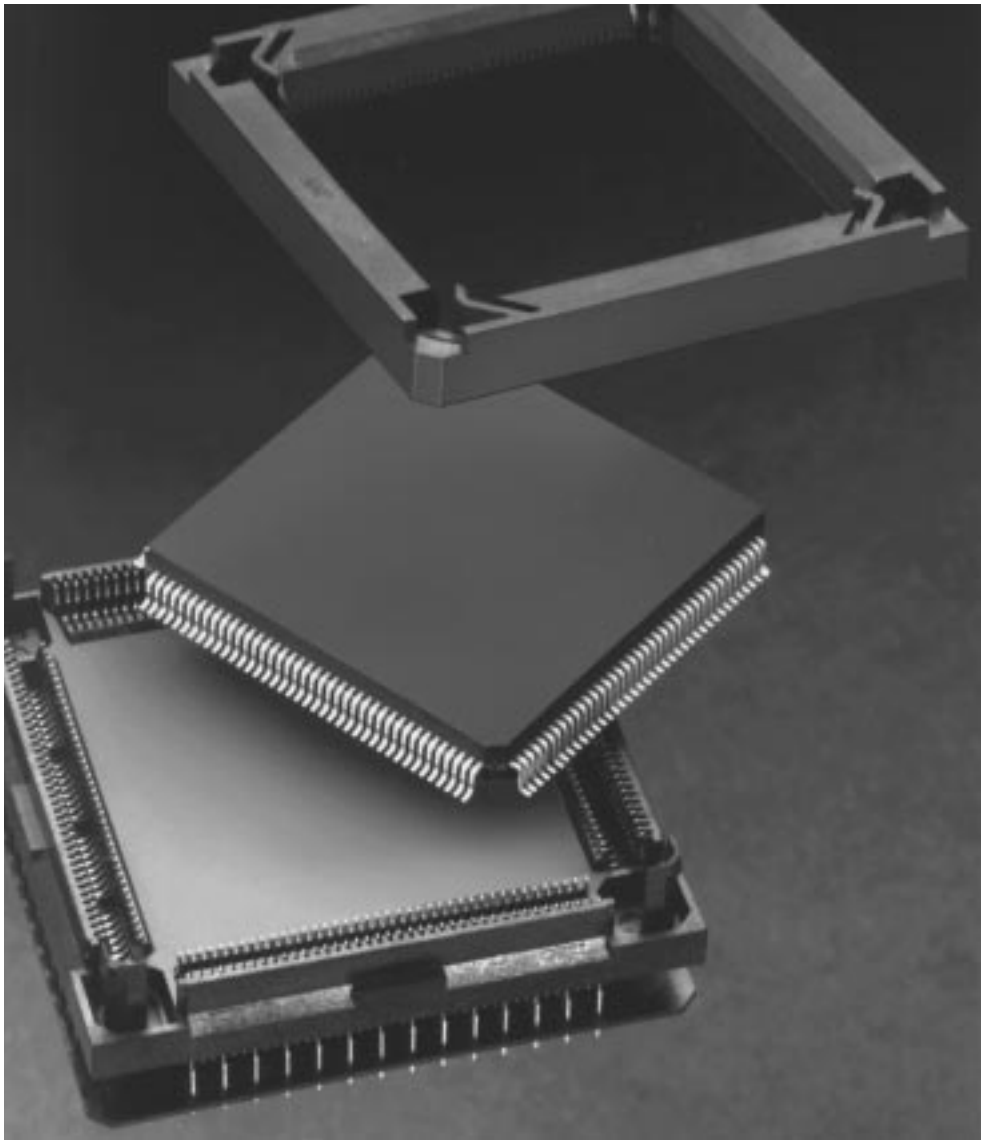

The AMP Metric PQFP socket provides a method for through-hole socketing of JEDEC (EIAJ) bumperless metric quad flat pack devices. The socket is designed to accept PQFP-style 28mm x 28mm packages on .65mm spacing per proposed JEDEC (EIAJ) Standard MO-108.

The socket features a two-piece design that allows the device to be first inserted into the plastic cover. Then the cover with the device is secured over the socket housing using the AMP insertion tool. This system protects the delicate gullwing leads and ensures proper lead-to-contact registration.

Available in 144- and 160-position versions, the socket features high temperature housing materials and a sealed bottom allowing it to withstand the rigors of flow soldering lines and automated assembly.

Technical Documents:

Product Specification
108-1348

Application Specification
114-1070

Instruction Sheets
408-3289 Hand Tools
408-9772 Penumatic Tool

Products for Industrial & Commercial Applications

Dimensions are shown for reference purposes only.

Dimensions are in inches and millimeters unless otherwise specified. Values in brackets are metric equivalents.

Specifications subject to change.

Technical Support Center
1-800-522-6752
www.tycoelectronics.com

Metric

For JEDEC Metric Quad Flat Pack ICs

Materials and Finish:

Housing and Cover — High temperature thermoplastic, 94V-0 rated

Contacts — Phosphor bronze with 0.00508 [.000200] tin-lead over 0.00127 [.000050] nickel

Performance Characteristics:

Voltage Rating — 250 VAC

Termination Resistance, Dry Circuit — 20 milliohms max, initial

Dielectric Withstanding Voltage — 750 VAC

Insulation Resistance — 5000 megohms

Capacitance — 1 picofarad max.

Durability — 15 cycles

Mating Force — 2.22 N [.5 lb.] max.

Contact Retention — 3.34 N [12 oz.]

Physical Shock — 50 Gs

Vibration — 15 Gs

Temperature Rating — 255°C to 1105°C

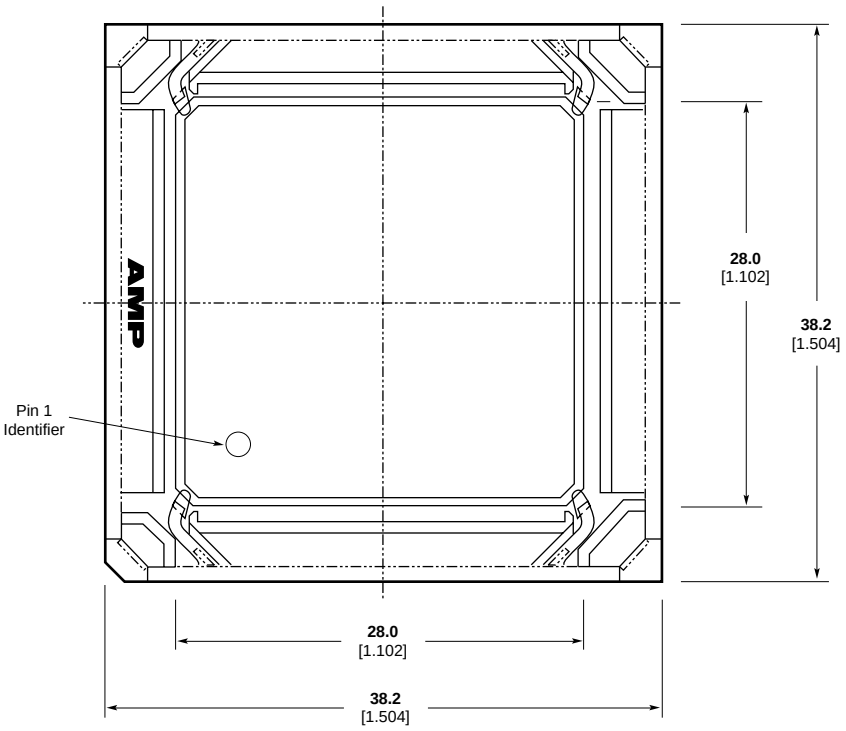

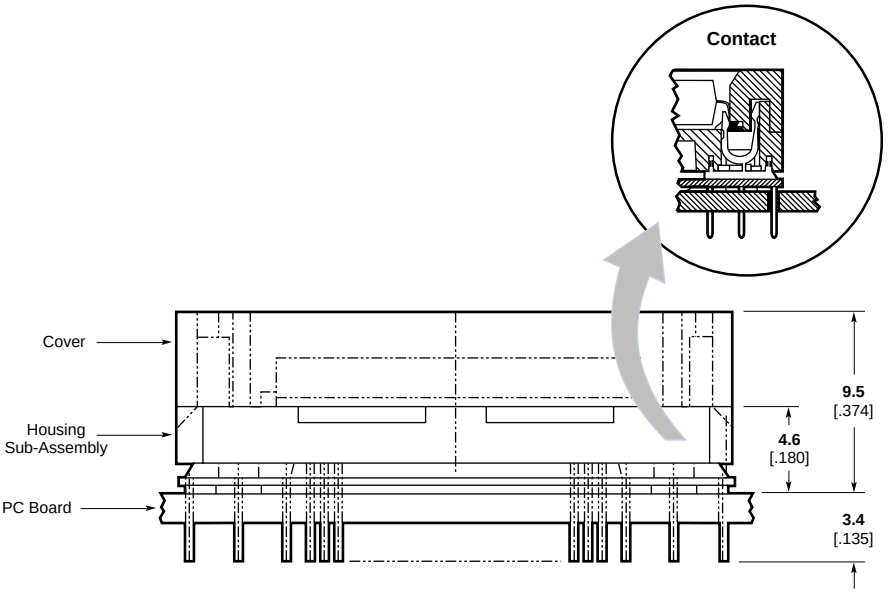

Insertion Hand Tool



Part Number 822253-4

Extraction Tool



Part Numner 822254-1

No. of Positions	Part Numbers	
	Housing Sub-Assembly	Cover
144	822114-3	822115-3
160	822114-4	822115-4

Packaging Quantities:
Cover shipped separately in antistatic tubes, 14 pcs./tube
Housing Assembly shipped in antistatic tubes, 14 pcs./tube

Products for Industrial & Commercial Applications

Dimensions are shown for reference purposes only.

Dimensions are in inches and millimeters unless otherwise specified. Values in brackets are metric equivalents.

Specifications subject to change.

Technical Support Center
1-800-522-6752
www.tycoelectronics.com

HOLTITE Series Press-Fit Sockets, Zero Profile



HOLTITE 8134-HC-5P3 Sockets

FEATURES:

The solderless zero-profile HOLTITE Socket contact is designed to be press-fit into the plated-thru hole of a printed wiring board. This unique design allows the plated-thru hole to become the component socket. The outer conical shape of the HOLTITE Socket contact sizes the plated-thru hole when pressed into place. The precision-machined geometry allows for the controlled displacement of plated material without damaging the hole, or affecting the normal mechanical and electrical contact performance.

- Lowest socket profile
  The profile of the printed wiring board with the HOLTITE Socket contact installed is less than the length of the IC or component lead, offering the lowest socketing profile, permitting card rack spacing as low as .400", identical to that of direct soldering.
- Precision-machined, tapered-entry, four finger contact
  The underlying contact design used in the HOLTITE Socket system has a proven record of reliability after more than fifteen years' usage in both commercial and military applications.
- Retains minimum component lead lengths
  The socketing technique provides the shortest distance between the component seating plane and the contact engagement zone for maximum retention of short component leads.
- Maximum heat dissipation
  Open contact design permits air flow through the board, increasing heat dissipation and extending component life.
- Solderless, gas-tight, press-fit insertion
  The solderless, pluggable system saves the time and cost of soldering, plus minimizing the potential for heat damage, warpage and corrosive residue contamination.
- Removes artwork design restrictions
  Use of the HOLTITE Socket solderless system removes certain artwork restrictions necessary for wave soldering and solder joint construction. Line spacing can be made as tight as electrical parameters allow without solder bridging or the need for soldermask. Terminal areas can be reduced in diameter without the need of a base for solder fillets. Ground plane areas can be increased without concern for heat-induced warpage.
- Immediate conversion to the HOLTITE Socket system
  Existing printed wiring designs can be converted by simply changing the drilled hole diameter prior to plating.

MATERIAL SPECIFICATIONS:

Carrier Strip.....MYLAR
Contact .....Beryllium copper
Finish.....Gold or tin/lead plated

PERFORMANCE SPECIFICATIONS: 5P HOLTITE SOCKETS

MECHANICAL
Vibration .....Passed MIL-STD-202, Method 204, 20 G's
Durability .....Passed MIL-STD-1344, Method 2016, 50 cycles
Insertion Force .....92 Grams (3.2 oz.) average with a .018" polished steel pin and a .043" plated thru hole
Withdrawal Force .....103 Grams (3.6 oz.) average with a .018" polished steel pin and a .043" plated thru hole
Contact Retention in Board 5 Lb. minimum

ELECTRICAL
Contact Resistance .....10 Milliohms max.
Contact Rating.....3 Amps

ENVIRONMENTAL
Humidity .....Passed MIL-STD-202, Method 106
Thermal Shock .....Passed MIL-STD-202, Method 107, Cond. F
Operation Temp. .....Gold contact -55°C to +125°C, Tin/lead contact -55°C to +105°C

For performance specifications on 6P, 8P and 12P HOLTITE Sockets, please consult Tyco Electronics.

Products for Industrial & Commercial Applications
Dimensions are shown for reference purposes only.
Dimensions are in inches and millimeters unless otherwise specified. Values in brackets are metric equivalents.
Specifications subject to change.
Technical Support Center
1-800-522-6752
www.tycoelectronics.com

HOLTITE Series Press-Fit Sockets, Zero Profile

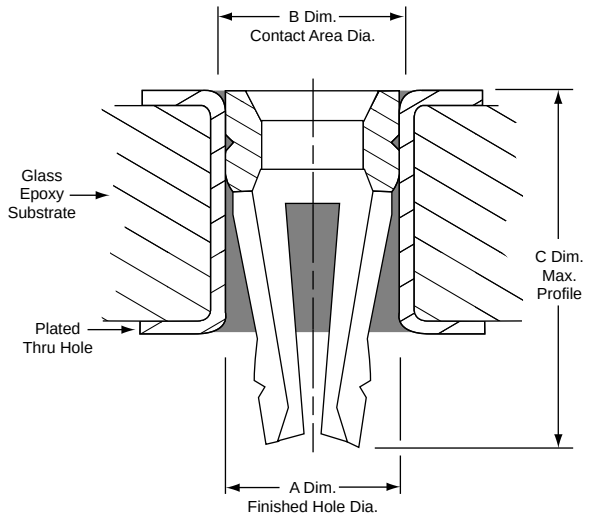

TABLE 1: PART NUMBERS

Military Part Number	Augat Part Number
M83505/6-001	M8134-HC-5P2
M83505/6-002	M8134-HC-6P2
M83505/6-003	M8134-HC-8P2
M83505/6-004	M8134-HC-12P2

RECOMMENDED HOLE SIZE AND LEAD SIZE

Part Number	Recommended Lead Size	Recommended Primary Drill Size	A Dim. Finished Plated-Thru Hole Size	B Dim. Contact Diameter	C Dim. Maximum Profile	Board Thickness	Plated-Thru Hole Finish
8134-HC-5P2 (Gold) 8134-HC-5P3 (Tin/Lead)	Rectangular Lead .011 x .018 (±.002) (0,28 x 0,46) (±0,05) or Round Lead .016 - .021 (0,406 - 0,533) Diameter	.0453 (1,15)	.041 ± .002 (1,04 ± 0,05)	.044 ± .0005 (1,12 ± 0,01)	.100 (2,54)	.030 (0,75) Minimum	.0003 - .0005 (0,0076 - 0,0127) Electro-deposited Tin/Lead over .001 (0,0254) Minimum Thick Electro Deposited Copper Plate
8134-HC-6P2 (Gold) 8134-HC-6P3 (Tin/Lead)	Round Lead .020 - .030 (0,51 - 0,76) Diameter	.0635 (1,61)	.058 ± .002 (1,47 ± 0,05)	.0625 ± .0005 (1,59 ± 0,01)	.140 (3,56)		
8134-HC-8P2 (Gold) 8134-HC-8P3 (Tin/Lead)	Round Lead .025 - .035 (0,64 - 0,89) Diameter Also suitable for use with .025 sq. post						
8134-HC-12P2 (Gold) 8134-HC-12P3 (Tin/Lead)	Round Lead .035 - .045 (0,89 - 1,14) Diameter	.0875 (2,22)	.082 ± .002 (2,08 ± 0,05)	.0860 ± .0005 (2,18 ± 0,01)	.160 (4,06)	.050 (1,27) Minimum	

Oversized Holtite

When recommended plated thru hole size has been exceeded by .002 (0,05) or less:
Part Numbers: 8134-HC-14P2 for 5P2; 8134-HC-14P3 for 5P3.

Gold Holtite Bulk Package are available qualified to MIL-S-83505.
See Table 1 for part numbers.

Note: Before ordering, see Cross Reference in Section 15 for equivalent Tyco Electronics Part Number.

Products for Industrial & Commercial Applications
Dimensions are shown for reference purposes only.
Dimensions are in inches and millimeters unless otherwise specified. Values in brackets are metric equivalents.
Specifications subject to change.
Technical Support Center
1-800-522-6752
www.tycoelectronics.com

HOLTITE Series Press-Fit Sockets, Zero Profile, on Reel





322-HCS5P2-100

HOLTITE SOCKET SIP PATTERN REELS

Part Number	Contact Plating	Number of Contacts per Pattern	Contact Style	Part Number	Contact Plating	Number of Contacts per Pattern	Contact Style
322-HCS5P2-100	Gold	2500 Contacts per Reel	5P2	322-HCS8P2-100	Gold	2500 Contacts per Reel	8P2
322-HCS5P3-100	Tin/Lead		5P3	322-HCS8P3-100	Tin/Lead		8P3
322-HCS6P2-100	Gold		6P2	322-HCS14P2-100*	Gold		14P2
322-HCS6P3-100	Tin/Lead		6P3	322-HCS14P3-100*	Tin/Lead		14P3

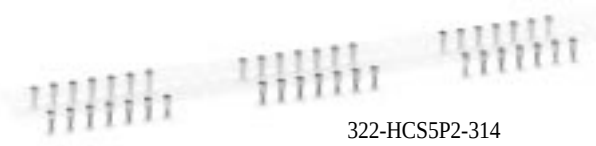

322-HCS5P2-314

HOLTITE SOCKET DIP PATTERN REELS

Part Number	Contact Plating	Number of Contacts per Pattern	Number of Patterns per Reel	Row Spacing	Contact Style	Contacts per Reel
322-HCS5P2-300	Gold	Universal on .100"	—	.300"	5P Series	5000
322-HCS5P3-300	Tin/Lead					
322-HCS5P2-308	Gold	8 Positions on .100"	625			
322-HCS5P3-308	Tin/Lead					
322-HCS5P2-314	Gold	14 Positions on .100"	357			
322-HCS5P3-314	Tin/Lead					
322-HCS5P2-316	Gold	16 Positions on .100"	313			
322-HCS5P3-316	Tin/Lead					
322-HCS5P2-318	Gold	18 Positions on .100"	278			
322-HCS5P3-318	Tin/Lead					
322-HCS5P2-320	Gold	20 Positions on .100"	250			
322-HCS5P3-320	Tin/Lead					
322-HCS5P2-400	Gold	Universal on .100"	—	.400"		
322-HCS5P3-400	Tin/Lead					
322-HCS5P2-422	Gold	22 Positions on .100"	227			
322-HCS5P3-422	Tin/Lead					
322-HCS5P2-424	Gold	24 Positions on .100"	208			
322-HCS5P3-424	Tin/Lead					
322-HCS5P2-600	Gold	Universal on .100"	—	.600"		
322-HCS5P3-600	Tin/Lead					
322-HCS5P2-624	Gold	24 Positions on .100"	208			
322-HCS5P3-624	Tin/Lead					
322-HCS5P2-628	Gold	28 Positions on .100"	179			
322-HCS5P3-628	Tin/Lead					
322-HCS5P2-632	Gold	32 Positions on .100"	156			
322-HCS5P3-632	Tin/Lead					
322-HCS5P2-636	Gold	36 Positions on .100"	139			
322-HCS5P3-636	Tin/Lead					
322-HCS5P2-640	Gold	40 Positions on .100"	125			
322-HCS5P3-640	Tin/Lead					

Application notes and tooling information appear on page 5046 & 5047.

Note: Before ordering, see Cross Reference in Section 15 for equivalent Tyco Electronics Part Number.

Products for Industrial & Commercial Applications
Dimensions are shown for reference purposes only.
Dimensions are in inches and millimeters unless otherwise specified. Values in brackets are metric equivalents.
Specifications subject to change.
Technical Support Center
1-800-522-6752
www.tycoelectronics.com

HOLTITE Socket Application Notes

OVERVIEW

The AMP HOLTITE Socket contact is a solderless, zero-profile contact designed to be contained within the barrel of a plated-thru hole. The unique design allows the contact and the plated-thru hole to form a zero-profile component socket which provides both the normal forces and the low contact resistance required to mechanically retain and electrically interconnect a broad range of electronic parts and components.

The outer shape of the HOLTITE Socket contact allows the plated-thru hole to elastically conform during insertion. The precision machined geometry allows for the controlled deformation of plated material without damaging the plated-thru hole or affecting the normal electrical and mechanical contact performance.

MATERIALS AND DESIGN

HOLTITE Socket contacts are precision machined from double-drawn solid beryllium-copper wire, and then heat treated. Beryllium copper is used because of its spring properties after heat treating. The copper affords excellent conductivity, while the beryllium lends hardness and durability to the finished contact.

The HOLTITE Socket contact has been machined as a seamless heat treated part, which gives it more uniform and repeatable spring properties than those of a stamped contact used in an identical through hole diameter. This uniformity of normal forces minimizes variations in contact resistance and is designed for the proper insertion/withdrawal forces on mating parts.

The HOLTITE Socket contact has been designed to provide a solderless gas tight electrical connection with mating parts. The angled contact opening greatly facilitates lead entry (especially important when automatically inserting IC's), and reduces the possibility of lead or plating damage. Two locking collars provide contact retention through a controlled elastic deformation, and a machined groove between the collars provides a relief for the compressive radial forces of the plated-thru hole plating material. Concentration of the forces and elastic deformation in this manner locks the contact in place.

A transition region below the lower collar serves as a relief area for any plastic deformation of plating material that may occur as the contact is inserted into the plated-thru hole. This relief provides the consistency of contact normal forces over slight variations in hole size, because plated-thru hole walls (under prescribed plating tolerances) will not come into contact with the beam of the HOLTITE Socket fingers.



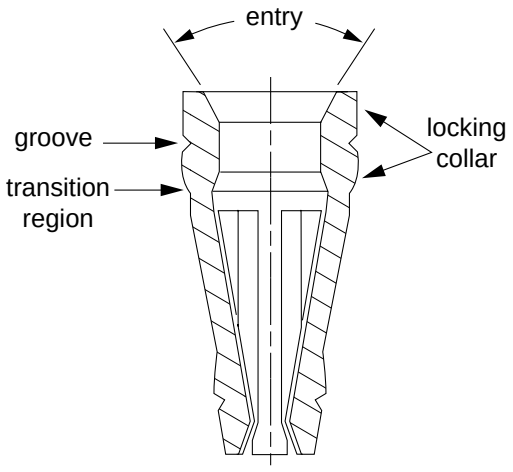

Figure 4
Profile Cross-Section

HOLE REQUIREMENTS

The fingers of 5P series HOLTITE Socket contacts will protrude out of circuit boards that are less than 3/32" (2,38 mm) thick. Care in board handling should be exercised in this case to prevent damage to the exposed contact fingers. This is not a concern in board thicknesses of 3/32" or greater because the contact fingers are entirely contained within the plated-thru hole.

The press fit technology used for installing HOLTITE Socket contacts is directly dependent on the hole size tolerance. The tolerances of the primary and finished hole sizes in a printed circuit board must be sufficiently narrow for adequate compressive stress between the hole walls and the locking collars of the contact.

The primary (drilled) hole size is a very important dimension. Finished hole tolerances should NOT be maintained by drilling over-sized holes and then plating down to the correct size, because copper and tin/lead alone will not create the compressive forces necessary to retain the HOLTITE Socket contact over time and temperature ranges. Drilling undersized holes, on the other hand, may introduce problems such as excessive contact insertion forces, board warpage and crazing around the hole. Holes should be drilled from the component insertion side of the board, whenever possible, to avoid creating drill-exit burrs on the press-fit portion of the thru-hole.

Products for Industrial & Commercial Applications
Dimensions are shown for reference purposes only.
Dimensions are in inches and millimeters unless otherwise specified. Values in brackets are metric equivalents.
Specifications subject to change.
Technical Support Center
1-800-522-6752
www.tycoelectronics.com

HOLTITE Socket Application Notes

SOCKET ASSEMBLY AND TOOLING

A HOLTITE Socket is created in the circuit board by inserting a Holtite contact directly into a plated-thru hole. The selective loading of contacts into plated-thru holes defines the socket outline. There are several alternatives for loading contacts into a plated-thru hole, ranging form “one at a time” hand loading tools available from Tyco Electronics to a simple flat press.

HOLTITE SOCKET PRINTED WIRING CONTACT KIT

Part Number 398-HK-001 **(Gold HOLTITE Sockets)** and 398-HK-002 **(Tin/Lead HOLTITE Sockets)**

This “starter"” kit is primarily designed to allow the loading of HOLTITE Socket contacts into a limited number of prototype boards as well as random individual loading into production boards.

The kit consists of: 5P Series and 6P Series HOLTITE Socket contacts, combination insertion tool and NO-GO gages for each, and a spring-loaded seating tool. The two insertion tools are color coded. The red end of each tool is NO-GO gage used for "quick check" hole size inspection. The insertion portion of the tools is designed to remove HOLTITE Socket contacts from their carrier cards and selectively insert them into plated-thru holes. Individual pressing and seating is then accomplished with the spring-loaded seating tools.

Quantities of approximately 1,000 5P and 2000 6P Series HOLTITE Socket contacts are supplied on cards with .100" grid spacing.



398-HK-001 (Gold HOLTITE Sockets)
or
398-HK-002 (Tin/Lead HOLTITE Sockets)

Note: Before ordering, see Cross Reference in Section 15 for equivalent Tyco Electronics Part Number.

SPRING LOADED HAND TOOL



399-HT-114

HOLTITE SOCKET TIPS

Tip # 399-HT-112 is for use with 5P HOLTITE Sockets and is blue in color.
Tip #399-HT-113 is for use with 6P, 8P, & 12P HOLTITE Sockets and is white in color.



399-HT-113

399-HT-112

PNEUMATIC HAND TOOL SYSTEM

This is a pneumatically operated system designed to individually seat Holtite contacts after they have been inserted into plated-thru holes. The system consists of a small control box connected by pneumatic tubing to a hand held impact tool. The tip of the hand tool is inserted into the contact and impact button is depressed. The contact is accurately seated into plated-thru hole. Pressure adjustments of the control box and variable tip sizes on the hand tool, allow this system to work with any size HOLTITE Sockets contact.

This system is particularly useful when loading random contacts, and is designed for low-volume production. The contact seating method provided by this system works very well in conjunction with HOLTITE Sockets contacts packaged on mylar carrier strips. The contacts, in this case remain secured in the MYLAR carrier until they have been seated in the plated-thru hole. The mylar carrier, at that point can be removed and discarded.

Holtite contacts in mylar are most commonly packaged on reels in the form of continuous strips. Custom socket patterns can be produced to satisfy individual customer requirements.



736-M0020

Products for Industrial & Commercial Applications
Dimensions are shown for reference purposes only.
Dimensions are in inches and millimeters unless otherwise specified. Values in brackets are metric equivalents.
Specifications subject to change.
Technical Support Center
1-800-522-6752
www.tycoelectronics.com

Plug Adapter Assemblies

600 Series

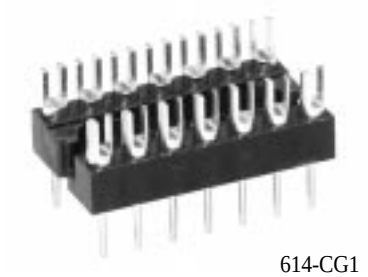

614-CG1

FEATURES:

The 600 Series is a high quality machined pin molded adaptor which is used to assemble hybrid and special network circuits. The .018" (0,46) diameter precision pin allows the adaptor to be plugged into socket or wire wrappable panels repeatedly.

- Precision machined pins
- Used for interposing discrete components
- Terminals are the same dimension as IC board patterns
- Option of round, solder pocket or slotted pin styles
- Thermoplastic polyester insulators
- Large variety of styles:
  8, 14, 16, 20 pins - .300" (7,62) between rows
  22 pins - .400"(10,16) between rows
  14, 16, 24, 28, 32, 36, and 40 pins - .600" (15,24) between rows
  14 & 16 pins - .800" (20,32) between rows

MATERIAL SPECIFICATIONS:

Insulator .....Thermoplastic polyester, UL rated 94V-0
Pins ……Phospher bronze, gold or tin/lead plated

Note: Before ordering, see Cross Reference in Section 15 for equivalent Tyco Electronics Part Number.

PERFORMANCE SPECIFICATIONS:

MECHANICAL

Vibration .....Tested to a frequency range of 10 to 2,000 Hz and returned to 10Hz in three perpendicular planes at a double amplitude of .06" (1,52) or 20 G's, whichever was less per MIL-STD-202, Method 204

Mechanical Shock.....Will meet the requirements of MIL-STD-202, Method 213 when subjected to a shock test at 150 G's acceleration

ELECTRICAL

Current Rating.....5 Amps when tested with a 30-gauge wire attached. Terminal will have a maximum 30°C temperature rise above ambient

Capacitance.....At a test frequency of 1 KHz, adjacent and/or terminal all at guard potential

Adjacent terminal:
AG and CG solder tail.....36pF
BG (solder pocket).....42pF
Opposite Terminal:
AG and CG solder tail.....025pF
BG (solder pocket).....034pF

Dielectric Withstanding ..
Voltage .....1,000 VRMS @ 30 inches mercury, .500 VRMS when tested @ 0.9 inches mercury, tested per MIL-STD-202, Method 301

Insulation Resistance .....1 x 10^{12} Ohms, tested to MIL-STD 202, Method 302, tested @ 500 Volts

ENVIRONMENTAL

Thermal Shock.....No visual damage when tested in accordance with MIL-STD-202, Method 107, test condition F for 5 consecutive cycles of -65°C to +150°C

Operating Temperatures.....-65°C to +125°C

Salt Spray .....No visual evidence of corrosion on Gold terminals when tested per MIL-STD-202, Method 101 Test condition B for 48 hours and a 5% salt solution

Products for Industrial & Commercial Applications
Dimensions are shown for reference purposes only.
Dimensions are in inches and millimeters unless otherwise specified. Values in brackets are metric equivalents.
Specifications subject to change.
Technical Support Center
1-800-522-6752
www.tycoelectronics.com

Plug Adapter Assemblies

600 Series

STANDARD CONFIGURATIONS

Number of Pins	Pin Style	Gold Part Number	Tin Part Number	"A" Max.	"B" Typ.	"C" *	"D_1" **	"D_2" **	"D_3" **	Figure
8	Round	608-AG1	608-AG1T	.400 (10,16)	.300 (7,62)	.300 (7,62)	———	———	———	1A
	Solder Pocket	608-BG1	608-BG1T							1B
	Slotted	608-CG1	608-CG1T							1C
14	Round	614-AG1	614-AG1T	.700 (17,78)	.600 (15,24)	.300 (7,62)	———	———	———	1A
	Solder Pocket	614-BG1	614-BG1T							1B
	Slotted	614-CG1	614-CG1T							1C
14	Round	614-AG3	614-AG3T	.700 (17,78)	.600 (15,24)	.600 (15,24)	.400 (10,16)	———	———	2A
	Solder Pocket	614-BG3	614-BG3T							2B
	Slotted	614-CG3	614-CG3T							2C
14	Round	614-AG2	614-AG2T	.750 (19,05)	.600 (15,24)	.800 (20,32)	———	———	———	3A
	Solder Pocket	614-BG2	614-BG2T							3B
	Slotted	614-CG2	614-CG2T							3C
16	Round	616-AG1	616-AG1T	.800 (20,32)	.700 (17,78)	.300 (7,62)	———	———	———	1A
	Solder Pocket	616-BG1	616-BG1T							1B
	Slotted	616-CG1	616-CG1T							1C
16	Round	616-AG3	616-AG3T	.800 (20,32)	.700 (17,78)	.600 (15,24)	.400 (10,16)	———	———	2A
	Solder Pocket	616-BG3	616-BG3T							2B
	Slotted	616-CG3	616-CG3T							2C
16	Round	616-AG2	616-AG2T	.850 (21,59)	.700 (17,78)	.800 (20,32)	———	———	———	3A
	Solder Pocket	618-BG2	618-BG2T							3B
	Slotted	616-CG2	616-CG2T							3C
18	Round	618-AG1	618-AG1T	.900 (22,86)	.800 (20,32)	.300 (7,62)	———	———	———	1A
	Solder Pocket	618-BG1	618-BG1T							1B
	Slotted	618-CG1	618-CG1T							1C
20	Round	620-AG1	620-AG1T	1.000 (25,90)	.900 (22,86)	.300 (7,62)	———	———	———	1A
	Solder Pocket	620-BG1	620-BG1T							1B
	Slotted	620-CG1	620-CG1T							1C
22	Round	622-AG1	622-AG1T	1.150 (29,21)	1.000 (25,90)	.400 (10,16)	———	———	———	1A
	Solder Pocket	622-BG1	622-BG1T							1B
	Slotted	622-CG1	622-CG1T							1C
24	Round	624-AG1	624-AG1T	1.200 (30,98)	1.100 (27,94)	.600 (15,24)	.900 (22,86)	.400 (10,16)	———	2A
	Solder Pocket	624-BG1	624-BG1T							2B
	Slotted	624-CG1	624-CG1T							2C
28	Round	628-AG2	628-AG2T	1.400 (35,56)	1.300 (33,02)	.600 (15,24)	.900 (22,86)	.400 (10,16)	———	2A
	Solder Pocket	628-BG2	628-BG2T							2B
	Slotted	628-CG2	628-CG2T							2C
32	Round	632-AG2	632-AG2T	1.600 (40,64)	1.500 (38,10)	.600 (15,24)	.900 (22,86)	.400 (10,16)	———	2A
	Solder Pocket	632-BG2	632-BG2T							2B
	Slotted	632-CG2	632-CG2T							2C
36	Round	636-AG1	636-AG1T	1.800 (45,72)	1.700 (43,18)	.600 (15,24)	1.500 (38,10)	.900 (22,86)	.400 (10,16)	2A
	Solder Pocket	636-BG1	636-BG1T							2B
	Slotted	636-CG1	636-CG1T							2C
40	Round	640-AG1	640-AG1T	2.000 (50,80)	1.900 (48,26))	.600 (15,24)	1.500 (38,10)	.900 (22,86)	.400 (10,16)	2A
	Solder Pocket	640-BG1	640-BG1T							2B
	Slotted	640-CG1	640-CG1T							2C

* Dimension **C** ± .010 (0,25)

** Dimension **D_1, D_2, D_3** ± .005 (0,13)

Solderless Wrap Styles:
3 Level Solderless Wrap: add "F" to printed circuit Part Number. Ex. 608-AG1TF

Note: Before ordering, see Cross Reference in Section 15 for equivalent Tyco Electronics Part Number.

Products for Industrial & Commercial Applications
Dimensions are shown for reference purposes only.
Dimensions are in inches and millimeters unless otherwise specified. Values in brackets are metric equivalents.
Specifications subject to change.
Technical Support Center
1-800-522-6752
www.tycoelectronics.com

Plug Adapter Assemblies

600 Series

SOLDER STYLE TERMINALS

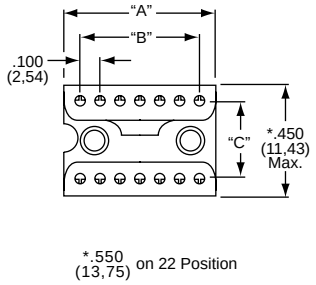

Fig. 1

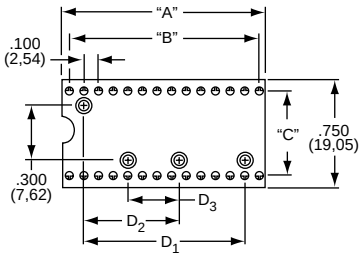

Fig. 2

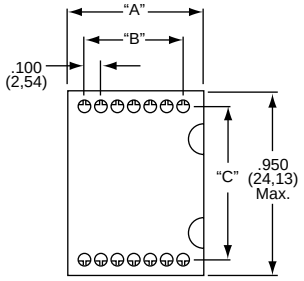

Fig. 3

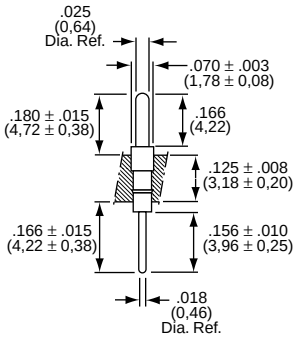

Figure A
8128-41P6 (Gold)

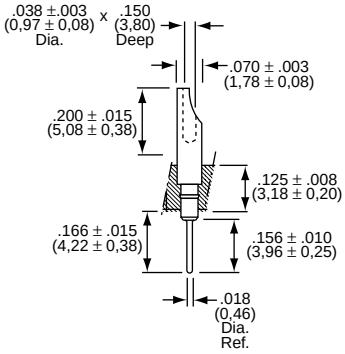

Figure B
8128-40P10 (Gold)

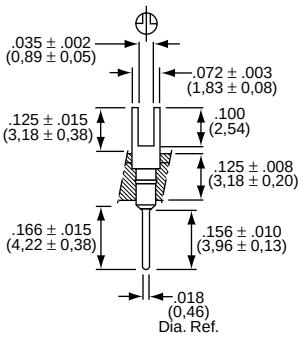

Figure C
8128-39P6 (Gold)

Note: Before ordering, see Cross Reference in Section 15 for equivalent Tyco Electronics Part Number.

Products for Industrial & Commercial Applications
Dimensions are shown for reference purposes only.
Dimensions are in inches and millimeters unless otherwise specified. Values in brackets are metric equivalents.
Specifications subject to change.
Technical Support Center
1-800-522-6752
www.tycoelectronics.com

Transistor Adapter Plugs

600-AG Series



608-AG22

FEATURES:

The 600-AG family of FR4 glass epoxy machined pin adaptors, converts standard 6 thru 10 lead round style transistor packages to standard 14 and 16 pin I.C. formats. These adaptors are used to mount circuits directly to wire wrappable panels that have 14 or 16 pin sockets, plug directly into DIP sockets or solder directly to printed wiring panels.

- TO-5 adaptors with .300" (7,62) centers between rows of pins, mount directly to any 14 or 16 pin packaging panel
- Feed thru pins/style, for convenient use as test points
- .018" (0,46) Dia. pins for multiple insertion into socket contacts
- .026" (0,66) Dia. mounting holes enable mounting transistor directly or for mounting a transistor socket for greater flexibility
- Adapters with .600" (15,24) centers designed for use on universal packaging panels
- Traces plated with electro tin for easy soldering

MATERIAL SPECIFICATIONS:

Insulator.....062" (1,57) Thick FR4 glass epoxy, UL rated 94V-2 or better
Plating .....Electro tin
Pin .....Phosphor bronze
Plating .....Gold

PERFORMANCE SPECIFICATIONS:

MECHANICAL
Solderability .....Passed MIL-STD-202, Method 208

ELECTRICAL
Capacitance .....4 pF
Bulk Resistance.....10 Milliohms max.
Current Rating.....5 Amps DC per pin
Operating Voltage.....500 Volts, not to exceed limit of interconnected device
Dielectric Withstanding Voltage .....1,000 Volts @ sea level, 300 Volts @ 50,000 feet
Insulation Resistance.....2×10^7 Ohms

ENVIRONMENTAL
Operating Temperature ....-50° C to $+125^{o}$ C

Note: Before ordering, see Cross Reference in Section 15 for equivalent Tyco Electronics Part Number.

Products for Industrial & Commercial Applications
Dimensions are shown for reference purposes only.
Dimensions are in inches and millimeters unless otherwise specified. Values in brackets are metric equivalents.
Specifications subject to change.
Technical Support Center
1-800-522-6752
www.tycoelectronics.com

Transistor Adapter Plugs

600-AG Series

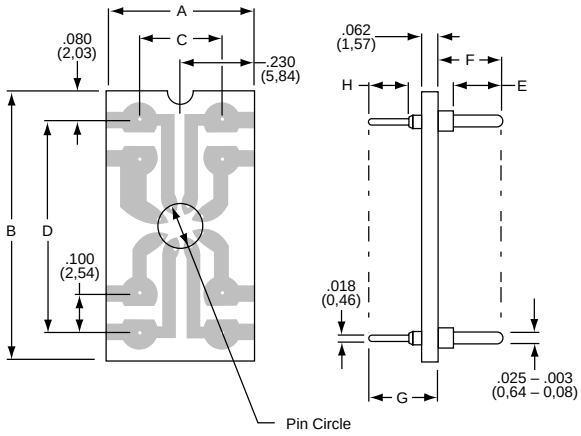

Figure 1
606-AG10
608-AG21
608-AG22

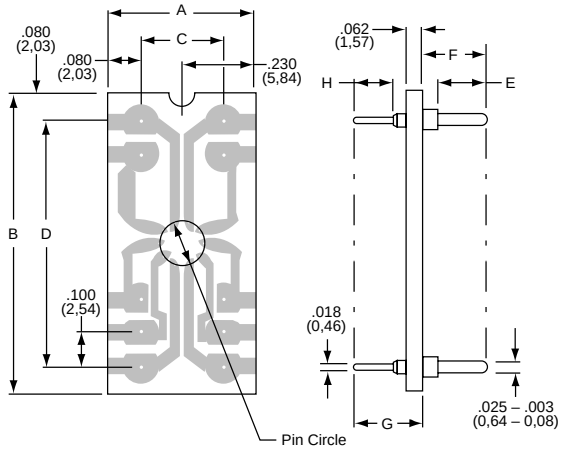

Figure 2
610-AG22

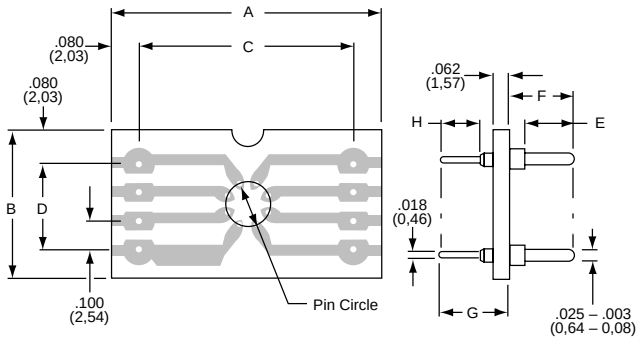

Figure 3
608-AG19

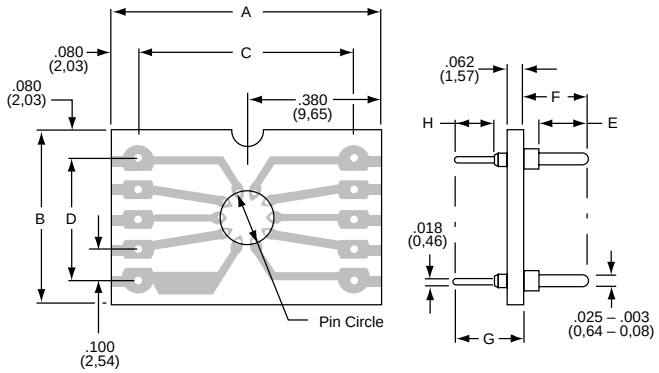

Figure 4
610-AG19

PART NUMBERS / STANDARD CONFIGURATIONS

Part Number	Figure	Pin Count NO PIN POSITIONS 9 & 12	Pin Circle	A *	B *	C **	D Ref.	E * *	F ***	G **	H ***
606-AG10	1	6	.200 (5,08)	.460 (11,68)	.860 (21,84)	.300 (7,62)	.700 (17,78)	.166 (4,22)	.218 (5,54)	.259 (6,58)	.156 (3,96)
608-AG19	3	8	.230 (5,84)	.760 (19,30)	.460 (11,68)	.600 (15,24)	.300 (7,62)				
608-AG21	1	8	.200 (5,08)	.460 (11,68)	.860 (21,84)	.300 (7,62)	.700 (17,78)				
608-AG22	1	8	.230 (5,84)	.460 (11,68)	.860 (21,84)	.300 (7,62)	.700 (17,78)				
610-AG19	4	10	.230 (5,84)	.760 (19,30)	.560 (14,20)	.600 (15,24)	.400 (10,16)				
610-AG22	2	10	.230 (5,84)	.460 (11,68)	.860 (21,84)	.300 (7,62)	.700 (17,78)				

* Dimension **A, B** ± .010
** Dimension **C, E, G** ± .005
*** Dimension **F, H** ± .015

Note: Before ordering, see Cross Reference in Section 15 for equivalent Tyco Electronics Part Number.

Products for Industrial & Commercial Applications
Dimensions are shown for reference purposes only.
Dimensions are in inches and millimeters unless otherwise specified. Values in brackets are metric equivalents.
Specifications subject to change.
Technical Support Center
1-800-522-6752
www.tycoelectronics.com

Numerical Display Sockets

500 Series

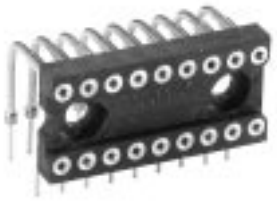

518-AG7D



516-AG21D



508-AG8D

FEATURES:

Offers a wide range of LED and ganged unit sockets to allow for total flexibility and size variations while incorporating the design features of our standard 500 Series sockets.

- Two-piece tapered entry socket terminal — four-fingered, gold plated inner contact and machined tin/lead plated outer sleeve.
- Available in either solderless wrap or printed circuit termination.
- Horizontal or right angle mounting.

MATERIAL SPECIFICATIONS (Figures 1, 2, 3):

Inner Contact.....Four-fingered beryllium copper, gold
Outer Sleeve .....Machined brass, tin/lead plated
Insulator.....Thermoplastic polyester UL rated 94V-0

MATERIAL SPECIFICATIONS (Figure 4):

Inner Contact.....Four-fingered beryllium copper, gold
Outer Sleeve .....Brass, tin/lead plated
Board.....Glass epoxy, tin-plated copper circuitry
Terminal .....Phosphor bronze, solder-coated
Spacer .....Delrin

Note: Before ordering, see Cross Reference in Section 15 for equivalent Tyco Electronics Part Number.

PERFORMANCE SPECIFICATIONS:

MECHANICAL

Vibration .....Passed MIL-STD-1344, Method 2005.1, Condition II, 10 G's
Shock.....Passed MIL-STD-1344, Method 2004.1, Condition C, 100 G's
Durability .....Passed MIL-STD-1344, Method 2016
Normal Force .....200 Grams (7.0 oz.) average with .018" (0,46) dia. polished steel pin
Insertion Force .....179 Grams (6.3 oz.) average with .018 (0,46)" dia. polished steel pin
Withdrawal Force .....63 Grams (2.2 oz.) average with .018" (0,46) dia. polished steel pin
Solderability .....Passed MIL-STD-202F, Method 208
Sleeve Retention in Plastic .....3.5 Lbs. per line minimum solderless wrap; 3.0 Lbs. PC tail
Inner Contact Retention .....7.5 Lbs. per line average

ELECTRICAL

Contact Resistance .....10 Milliohms
Contact Rating.....3 Amps
Capacitance .....1.0 pF per MIL-STD-202, Method 305 (contact to contact)
Insulation Resistance.....5,000 Megohms min. @ 500 VDC per MIL-STD-1344, Method 3003.1
Dielectric Withstanding Voltage .....1,000 Volts RMS per MIL-STD-1344, Method 3001.1

ENVIRONMENTAL

Humidity .....Passed MIL-STD-1344, Method 1002.2, Cond. II
Thermal Shock .....Passed MIL-STD-1344, Method 1003.1, Cond. A
Operation Temperature ....Gold inner contact -55°C to +125°C
Tin/lead inner contact -55°C to +105°C

Products for Industrial & Commercial Applications
Dimensions are shown for reference purposes only.
Dimensions are in inches and millimeters unless otherwise specified. Values in brackets are metric equivalents.
Specifications subject to change.
Technical Support Center
1-800-522-6752
www.tycoelectronics.com

Angle Mount DIP Sockets

500 Series

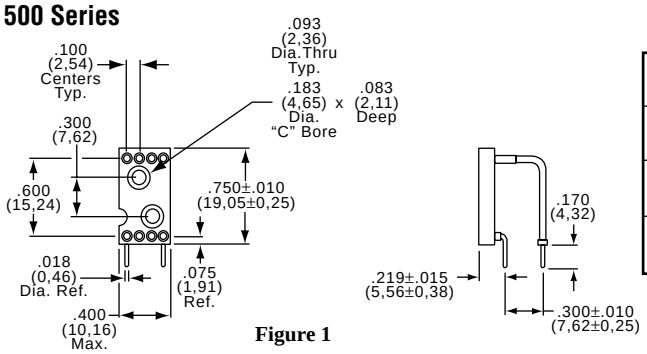

Figure 1

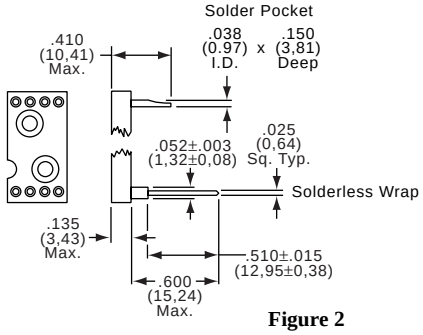

Figure 2

PART NUMBERS / STANDARD CONFIGURATIONS

Part Number	Figure	Number of Contacts	Description
508-AG8D	1	8	Right angle mtg., printed circuit
508-AG4A	2	8	Horizontal mtg., solder pocket
508-AG4F	2	8	Horizontal mtg., 3 level solderless wrap

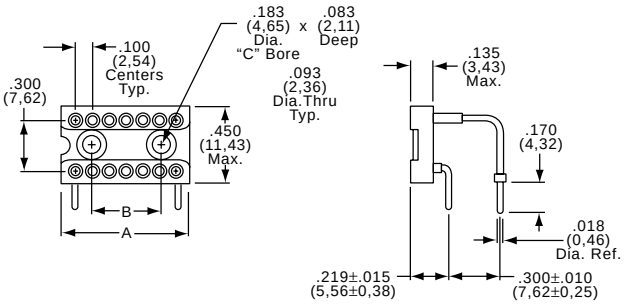

Figure 3
Horizontal Right Angle

PART NUMBER / STANDARD CONFIGURATIONS

Part Number	Number of Contacts	A Max.	B	Description
508-AG7D	8	.400 (10,16)	One Hole Only	Right angle mtg., printed circuit
514-AG7D	14	.700 (17,78)	.400 (10,16)	
516-AG7D	16	.800 (20,32)	.500 (12,70)	
518-AG7D	18	.900 (22,86)	.600 (15,24)	
520-AG7D	20	1.000 (25,40)	.500 (12,70)	

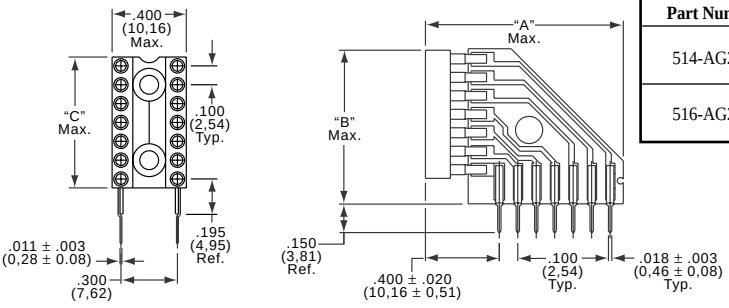

Figure 4
Vertical Right Angle

PART NUMBER / STANDARD CONFIGURATIONS

Part Number	Number of Contacts	"A" Max.	"B" Max.	"C" Max.
514-AG21D	14	1.100 (27,49)	.900 (22,86)	.700 (17,78)
516-AG21D	16	1.220 (30,99)	1.010 (25,65)	.800 (20,32)

Note: Before ordering, see Cross Reference in Section 15 for equivalent Tyco Electronics Part Number.

Products for Industrial & Commercial Applications
Dimensions are shown for reference purposes only.
Dimensions are in inches and millimeters unless otherwise specified. Values in brackets are metric equivalents.
Specifications subject to change.
Technical Support Center
1-800-522-6752
www.tycoelectronics.com

Ganged DIP Sockets

500 Series

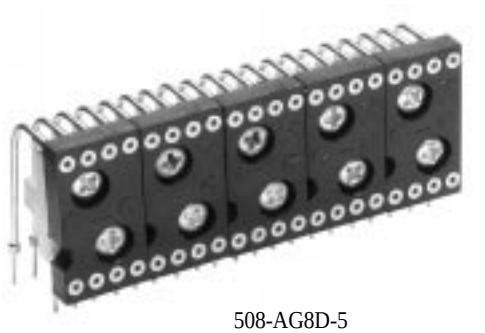

508-AG8D-5

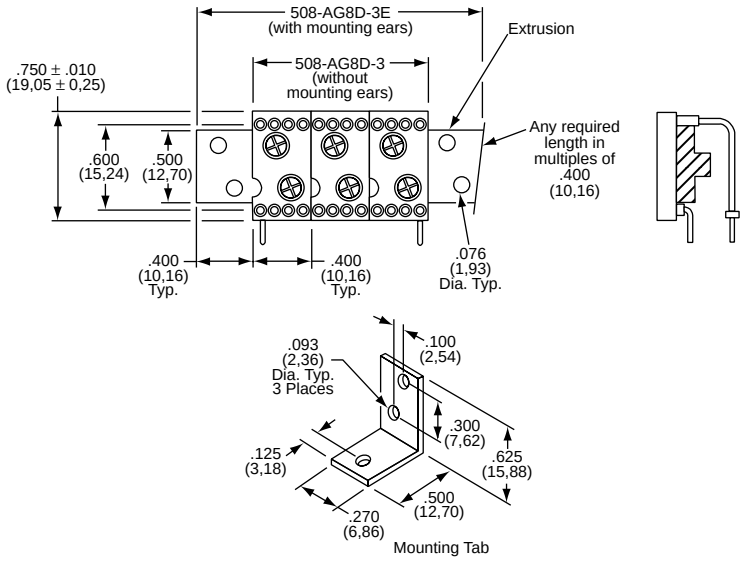

GANGED UNIT ASSEMBLIES:

The 508 Series numbers in part block are individual sockets. Add required dash number to appropriate socket part number for ganged unit assemblies. With or without extrusion extension (serves as mounting ears). Units with extrusion extensions are furnished with four No. 2 x 1/4" long self-tapping screws.

EXTRUSION:

Extrusion for ganging also available separately, part number 508-5G1. Simply add suffix number to indicate required length. Each extrusion is furnished with No. 2 x 1/4" long self-tapping screws, quantity same as number of holes in extrusion.

MOUNTING TAB:

Part number 508-4P1 is used for mounting ganged unit assemblies. Sold separately if required.

MATERIAL SPECIFICATIONS:

Inner Contact.....Four-fingered beryllium copper, gold
Outer Sleeve .....Machined brass, tin/lead plated
Insulator.....Thermoplastic polyester UL rated 94V-0
Extrusion .....Vinyl
Mounting Tab .....Stainless steel .032 (0,81) thick

HOW TO ORDER

5 0 8 — A G 8 D — 3 E

- 508 — Socket Part Number
- 3 — Number of Units
- E — Mounting Ears (extrusion); Blank - No mounting ears

Part No. Example: 508-AG8D-3E

PERFORMANCE SPECIFICATIONS:

MECHANICAL

Vibration .....Passed MIL-STD-1344, Method 2005.1, Condition II, 10 G's
Shock.....Passed MIL-STD-1344, Method 2004.1, Condition C, 100 G's
Durability .....Passed MIL-STD-1344, Method 2016
Normal Force .....200 Grams (7.0 oz.) average with .018" (0,46) dia. polished steel pin
Insertion Force .....179 Grams (6.3 oz.) average with .018" (0,46) dia. polished steel pin
Withdrawal Force .....63 Grams (2.2 oz.) average with .018" (0,46) dia. polished steel pin
Solderability .....Passed MIL-STD-202F, Method 208
Sleeve Retention in Plastic .....3.0 Lbs. per line minimum PC tail
Inner Contact Retention .....7.5 Lbs. per line average

ELECTRICAL

Contact Resistance .....10 Milliohms
Contact Rating.....3 Amps
Capacitance .....1.0 pF per MIL-STD-202, Method 305 (contact to contact)
Insulation Resistance.....5,000 Megohms min. @ 500 VDC per MIL-STD-1344, Method 3003.1
Dielectric Withstanding Voltage .....1,000 Volts RMS per MIL-STD-1344, Method 3001.1

ENVIRONMENTAL

Humidity .....Passed MIL-STD-1344, Method 1002.2, Cond. II
Thermal Shock .....Passed MIL-STD-1344, Method 1003.1, Cond. A
Operation Temperature ....Gold inner contact -55°C to +125°C
Tin/lead inner contact -55°C to +105°C

Note: Before ordering, see Cross Reference in Section 15 for equivalent Tyco Electronics Part Number.

Products for Industrial & Commercial Applications
Dimensions are shown for reference purposes only.
Dimensions are in inches and millimeters unless otherwise specified. Values in brackets are metric equivalents.
Specifications subject to change.
Technical Support Center
1-800-522-6752
www.tycoelectronics.com

Crystal Socket Assemblies

8000-AG & 8004-1G Series



8000-AG2

FEATURES:

The crystal socket assembly is a high quality component manufactured with superior materials designed for dependable mechanical and electrical life. Developed for use with a broad spectrum of crystal sizes, the crystal package can easily be inserted and removed without removing and adjusting latches and/or screws. Once the crystal has been installed it will not shake loose even under severe vibration.

- 8000 Series miniature style is designed to accommodate HC-6/µ, HC-13µ HC-14/µ, HC-27µ, HC-36/µ and HC-48/µ crystal sizes
- 8004 Series subminiature style is designed to accomodate HC-18/µ, HC-25µ, HC-42/µ, HC-43/µ,HC-49/µ and HC-50/µ crystal sizes
- Contact designs include flow-solder, horizontal solder eyelet and right angle solder eyelet tails, in both machined sleeve and stamped contact variations
- Provides maximum protection of crystal devices in severe shock and vibration environments
- Insulators offered in teflon and nylon materials
- Broad range of clip and contact materials
- Acts as additional heat sink to protect crystal against temperature variations

MATERIAL SPECIFICATIONS:

Insulators.....Teflon or blue nylon
Contacts.....Berylliium copper
Contact Plating .....Gold or tin
Holding Clips .....Berylliium copper alloy, cadmium plated with gold iridite

PERFORMANCE SPECIFICATIONS: 8000 SERIES

MECHANICAL
Vibration .....10 to 2,000 Hz at 15 G's with crystal mounted, no movement of crystal or damage assembly

ELECTRICAL
Bulk Resistance.....15 Milliohms @ 30 millivolts
Capacitance to Ground (Contact to Holding Clip) .....5pF @ 1,000 Hz
Capacitance Between Contacts.....3pf @ 1,000 Hz
Dielectric Withstanding Voltage .....2,500 RMS @ sea level, 400 RMS @ 70,000 ft.

ENVIRONMENTAL
Temperature Range (For Crystal Socket Only) .....-55°C to + 125°C
Salt Spray .....5% for 48 hours, no breakdown of plating or damage to base metal

PERFORMANCE SPECIFICATIONS: 8004 SERIES

MECHANICAL
Vibration .....10 to 2,000 Hz @ 15 G's

ELECTRICAL
Bulk Resistance.....10 Milliohms
Capacitance to Ground (Contact to Holding Clip) 8pF
Capacitance Between Contacts.....5 pF
Dielectric Withstanding Voltage .....2,500 RMS

ENVIRONMENTAL
Temperature Range (For Crystal Socket Only) .....-55°C to + 125°C
Salt Spray .....5% solutions for 48 hours

Products for Industrial & Commercial Applications
Dimensions are shown for reference purposes only.
Dimensions are in inches and millimeters unless otherwise specified. Values in brackets are metric equivalents.
Specifications subject to change.
Technical Support Center
1-800-522-6752
www.tycoelectronics.com

Crystal Socket Assemblies

8000-AG & 8004-1G Series

PART NUMBER / STANDARD CONFIGURATIONS

Accepts .017 (0,43) Diameter Leads Crystal Styles: HC-18µ, HC-43µ, HC-49µ						
Socket Part Number	**Figure**	**Description**	**Contact Material**	**Contact Design**	**Contact Plating**	**Insulation Material**
8004-23G1	2	Printed circuit mount with anti-rotating tab	Beryllium Copper	Machined	Gold	Teflon

Accepts .040 (1,02) Diameter Leads Crystal Styles: HC-25µ, HC-42µ, HC-50µ						
Socket Part Number	**Figure**	**Description**	**Contact Material**	**Contact Design**	**Contact Plating**	**Insulation Material**
8004-1G16	2	Printed circuit mount with anti-rotating tab	Beryllium Copper	Machined	Gold	Teflon
8004-1G4	1	Printed circuit mount with anti-rotating tab	Phosphor Bronze	Stamped		
8004-1G23	2	Printed circuit mount without anti-rotating tab	Beryllium Copper	Machined		
8004-1G1	1	Horizontal mount with anti-rotating tab	Phosphor Bronze	Stamped		
8004-1G2	1	Horizontal mount without anti-rotating tab				
8004-1G3	1	Printed circuit mount with anti-rotating tab				
8004-1G26	1	Horizontal mount without anti-rotating tab	Beryllium Copper			

Accepts .050 (1,27) Diameter Leads Crystal Styles: HC-6µ, HC-13µ, HC-14µ, HC-27µ, HC-36µ, HC-48µ						
Socket Part Number	**Figure**	**Description**	**Contact Material**	**Contact Design**	**Contact Plating**	**Insulation Material**
8000-AG1	3	Horizontal mount with anti-rotating tab	Phosphor Bronze	Stamped	Gold	Teflon
8000-AG2	3	Horizontal mount without anti-rotating tab				
8000-AG9	4	Printed circuit mount with anti-rotating tab				
8000-AG3	3					
8000-AG36	5				Tin	Nylon
8000-AG4	3	Printed circuit mount without anti-rotating tab			Gold	Teflon

Note: Before ordering, see Cross Reference in Section 15 for equivalent Tyco Electronics Part Number.

Products for Industrial & Commercial Applications
Dimensions are shown for reference purposes only.
Dimensions are in inches and millimeters unless otherwise specified. Values in brackets are metric equivalents.
Specifications subject to change.
Technical Support Center
1-800-522-6752
www.tycoelectronics.com

Crystal Socket Assemblies

8000-AG & 8004-1G Series

FIGURE 1



8004-1G4

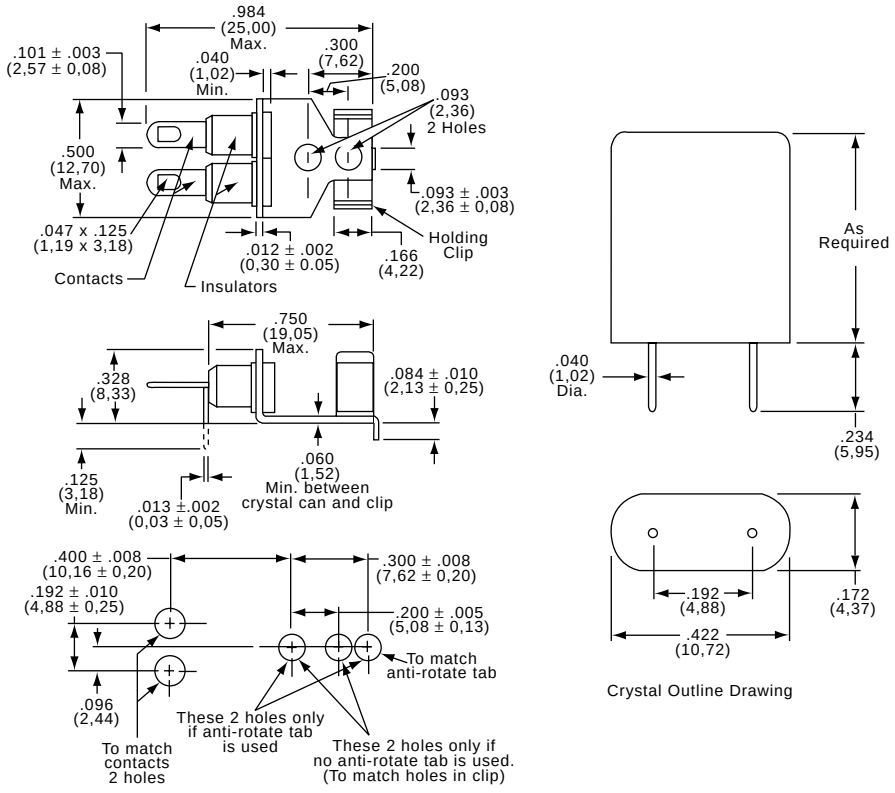

FIGURE 2



8004-1G23

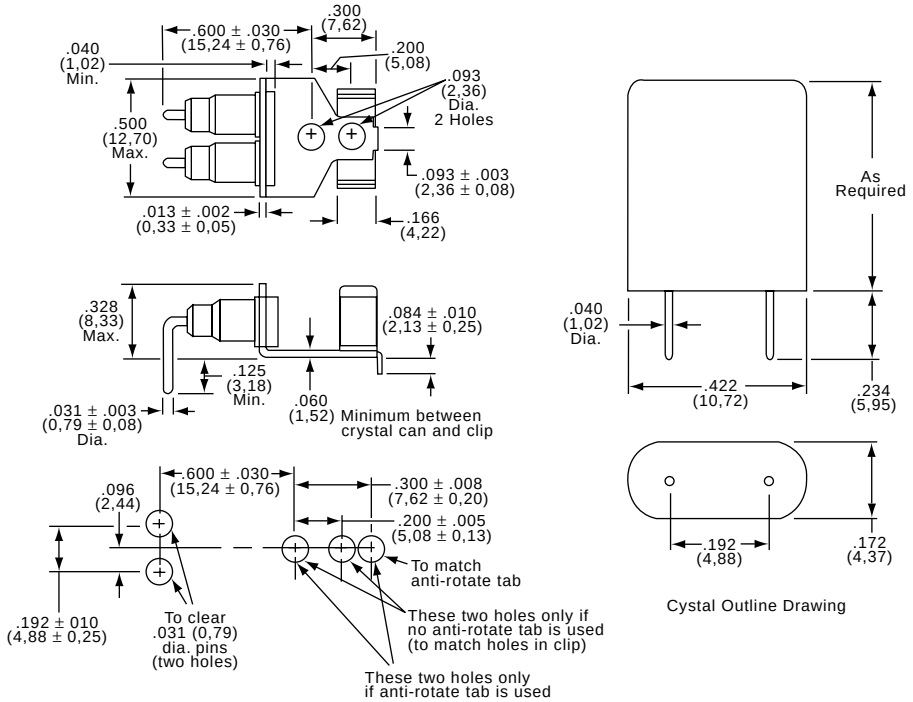

Note: Before ordering, see Cross Reference in Section 15 for equivalent Tyco Electronics Part Number.

Products for Industrial & Commercial Applications
Dimensions are shown for reference purposes only.
Dimensions are in inches and millimeters unless otherwise specified. Values in brackets are metric equivalents.
Specifications subject to change.
Technical Support Center
1-800-522-6752
www.tycoelectronics.com

Crystal Socket Assemblies

8000-AG & 8004-1G Series

FIGURE 3



8000-AG2

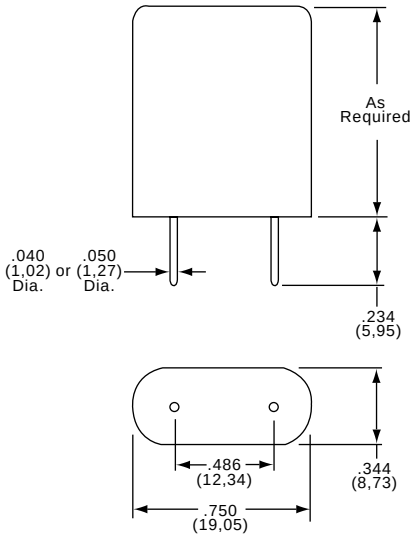

Crystal Outline Drawing

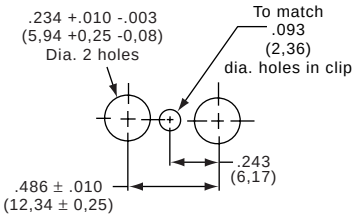

For Vertical Mounting

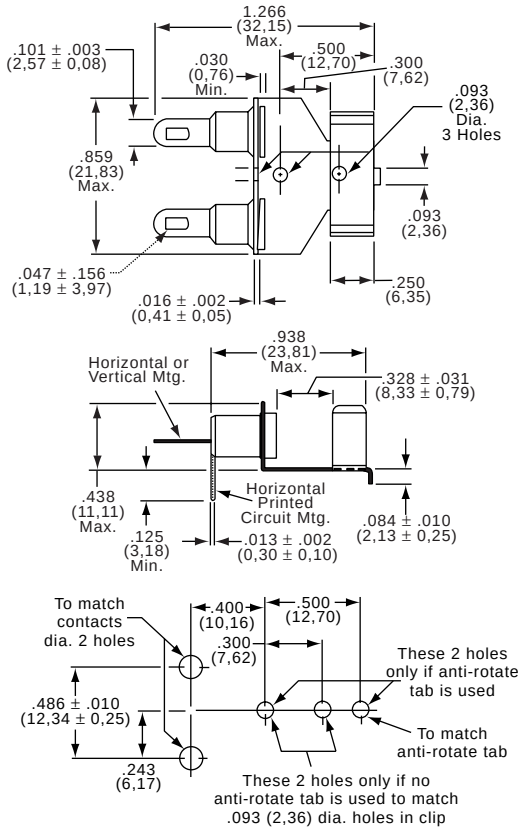

For Horizontal or Printed Circuit Mounting

FIGURE 4



8000-AG9

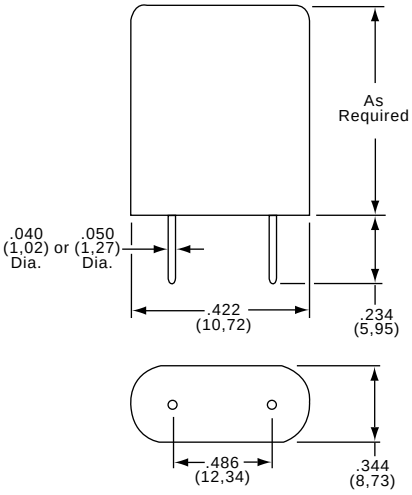

Crystal Outline Drawing

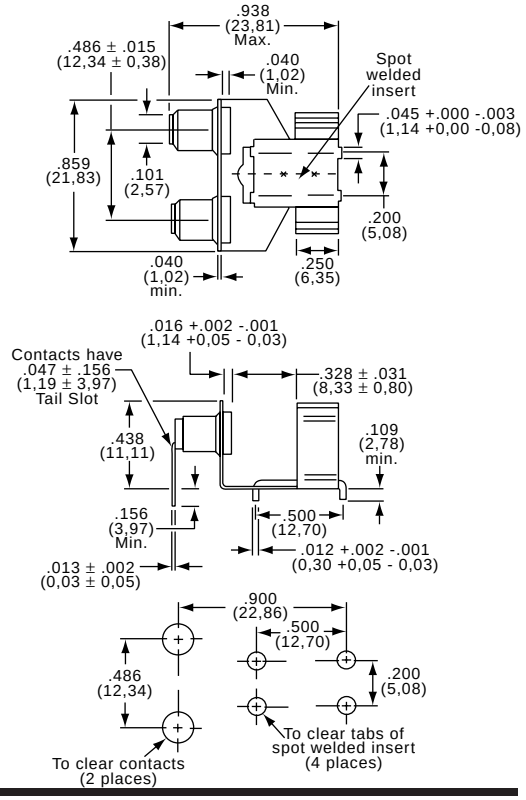

Note: Before ordering, see Cross Reference in Section 15 for equivalent Tyco Electronics Part Number.

Products for Industrial & Commercial Applications
Dimensions are shown for reference purposes only.
Dimensions are in inches and millimeters unless otherwise specified. Values in brackets are metric equivalents.
Specifications subject to change.
Technical Support Center
1-800-522-6752
www.tycoelectronics.com

Crystal Socket Assemblies

8000-AG & 8004-1G Series

FIGURE 5



8000-AG36

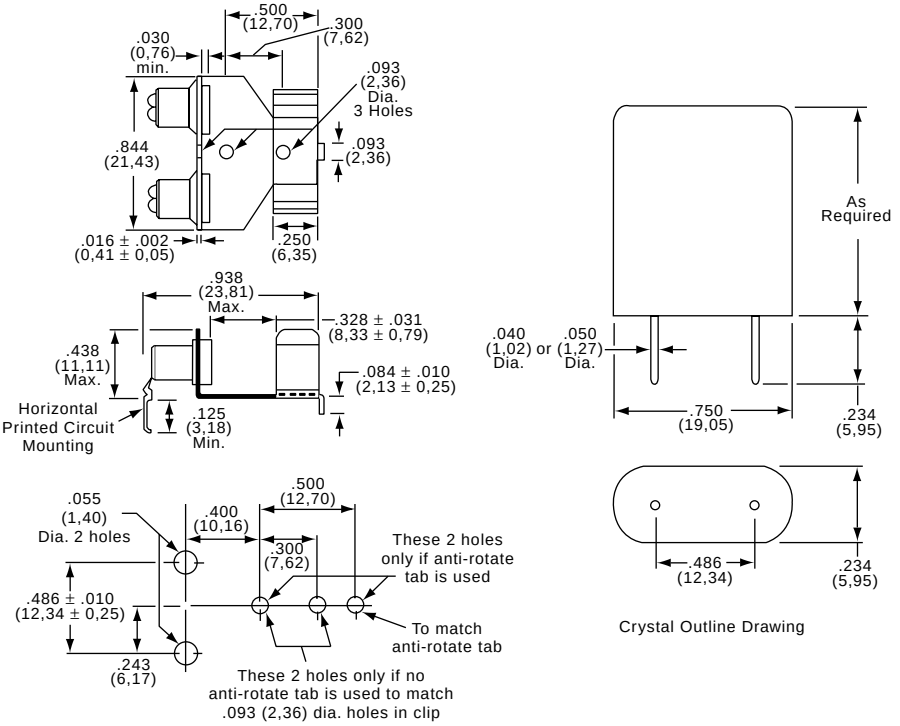

Crystal Outline Drawing

Note: Before ordering, see Cross Reference in Section 15 for equivalent Tyco Electronics Part Number.

Products for Industrial & Commercial Applications
Dimensions are shown for reference purposes only.
Dimensions are in inches and millimeters unless otherwise specified. Values in brackets are metric equivalents.
Specifications subject to change.
Technical Support Center
1-800-522-6752
www.tycoelectronics.com

Programming Jumper Plug Assemblies

8136-875 Series



8136-475G8

FEATURES:

8136-475 Series of programmed jumper plugs offer the unique combination of low cost and flexible signal path selection. Standard configurations are supplied programmed across rows. Special configurations are available side by side and across row, intermixed programmed signal path variations.

- Low profile; only .100" (2,54) high, “X” & “Y” stackability
- Available with gold or tin plating
- Available in standard units of 1,2,3,4,7,8,9 (double pin)
- Jumper pin assembly spans .300" (7,62) centers to connect opposing contacts in I.C. patterns, or .100" (2,54) centers to connect adjacent pins
- Also available in special configurations combining .100" (2,54) center shorting pins with .300" (7,62) center pins
- To allow greater flexibility, individual jumper pins and insulators are available for installation by the customer (simple press assembly)

MATERIAL SPECIFICATIONS:

Insulator.....Thermoplastic polyester, UL rated 94V-0
Pin .....Phosphor bronze
Plating .....Gold or tin

PERFORMANCE SPECIFICATIONS:

MECHANICAL
Solderability .....MIL-STD-202, Method 208

ELECTRICAL
Current Rating.....3 Amps DC
Operating Voltage.....500 Volts RMS at atmospheric pressure
Dielectric Withstanding
Voltage .....2,500 Volts RMS for 5 seconds
Bulk Resistance.....10 Milliohms at .020 Amps DC
Insulation Resistance.....2 x 10^9 Ohms at 90% relative humidity

ENVIRONMENTAL
Operating Temperature ....-65°C to +125°C

Note: Before ordering, see Cross Reference in Section 15 for equivalent Tyco Electronics Part Number.

Products for Industrial & Commercial Applications
Dimensions are shown for reference purposes only.
Dimensions are in inches and millimeters unless otherwise specified. Values in brackets are metric equivalents.
Specifications subject to change.
Technical Support Center
1-800-522-6752
www.tycoelectronics.com

Programming Jumper Plug Assemblies

8136-475 Series

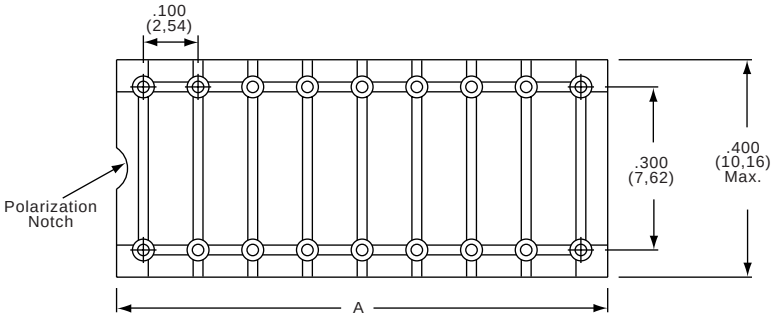

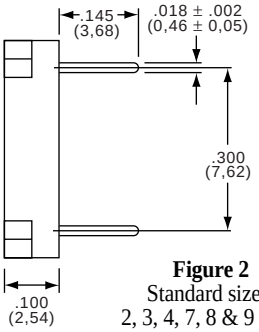

Figure 2
Standard sizes:
2, 3, 4, 7, 8 & 9 units

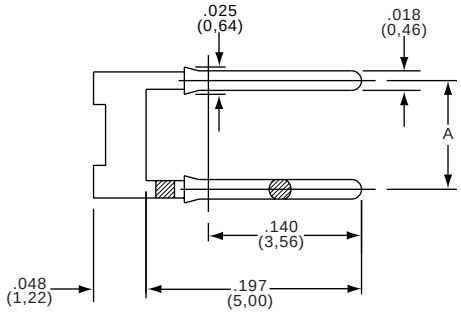

Figure 3
Jumper pin

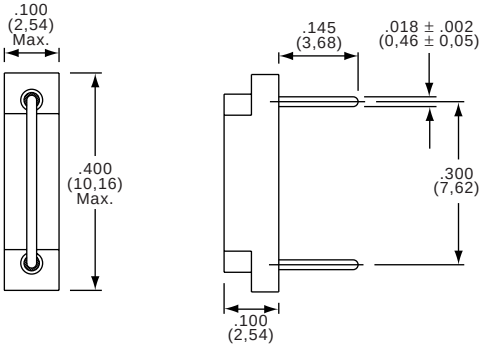

Figure 1
Single unit

INSULATOR ONLY

Size	Part Number	Dimension A
Insulator-1 Unit	8136-477P1	.100 (2,54)
Insulator-2 Units	8136-652P6	.200 (5,08)
Insulator-3 Units	8136-652P1	.300 (7,62)
Insulator-4 Units	8136-652P2	.400 (10,16)
Insulator-7 Units	8136-652P3	.700 (17,78)
Insulator-8 Units	8136-652P4	.800 (20,32)
Insulator-9 Units	8136-652P5	.900 (22,86)

Note: Before ordering, see Cross Reference in Section 15 for equivalent Tyco Electronics Part Number.

PART NUMBER / STANDARD CONFIGURATIONS

Gold Part Number	Figure	Number of Units	Dim. A
8136-475G1	1	1	-----
8136-475G2	2	2	.200 (5,08)
8136-475G3	2	3	.300 (7,62)
8136-475G4	2	4	.400 (10,16)
8136-475G7	2	7	.700 (17,78)
8136-475G8	2	8	.800 (20,32)
8136-475G9	2	9	.900 (22,86)
8136-651P2 (gold)	3	Jumper Pin	.100 (2,54)
8136-651P3 (tin)	3	Jumper Pin	.100 (2,54)
8136-650P2 (gold)	3	Jumper Pin	.300 (7,62)
8136-650P3 (tin)	3	Jumper Pin	.300 (7,62)

* For tin-plated version of Figs. 1&2, use suffix "T" after part number.
Example: 8136-475G1T.

Products for Industrial & Commercial Applications
Dimensions are shown for reference purposes only.
Dimensions are in inches and millimeters unless otherwise specified. Values in brackets are metric equivalents.
Specifications subject to change.
Technical Support Center
1-800-522-6752
www.tycoelectronics.com

Fuse Sockets

500 Series



510-21232

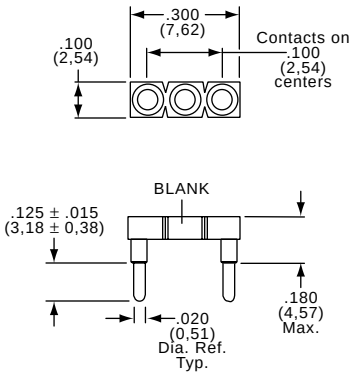

FEATURES:

AMP offers a SIP style socket for use with PC fuses.

- Precision four-finger inner contact provides concentric funnel entry for easy flat and round lead insertion
- Non-wicking, closed bottom sleeve gives 100% protection against flux and solder contamination
- BeCu inner contact for maximum mechanical and electrical performance

APPLICATION DIMENSIONS:

- PCB Thickness Range: Standard .062" and .092" (1,57 and 2,34)
- PCB Hole Size Range: .035" ± .003" (0,89 ± 0,08) PC tail
- IC Pin Dimension Range: .009" x .015" (0,23 x 0,38) through .011" x .020" (0,28 x 0,51) .016" to .021" (0,41 to 0,53) round lead, .105"(2,67) min. length

MATERIAL SPECIFICATIONS:

Insulator.....Thermoplastic polyester, UL rated 94V-0
Inner Contact.....Four-fingered beryllium copper, gold over nickel plated
Outer Sleeve .....Machined brass, gold over nickel or tin/lead over copper plated

PART NUMBER

Part Number	Contact Plating	Sleeve Plating
510-21114	Gold	Tin/Lead
510-21232	Tin/Lead	Tin/Lead

Note: Before ordering, see Cross Reference in Section 15 for equivalent Tyco Electronics Part Number.

PERFORMANCE SPECIFICATIONS:

MECHANICAL
Vibration .....Passed MIL-STD-1344, Method 2005.1, Condition II, 10 G's
Shock.....Passed MIL-STD-1344, Method 2004.1, Condition C, 100 G's
Durability .....Passed MIL-STD-1344, Method 2016
Normal Force .....200 Grams (7.1 oz.) average with .018" (0,46) dia. polished steel pin
Inner Contact Retention .....7.5 Lbs. per line average
Sleeve Retention in Plastic.....3.0 Lbs. per line minimum
Solderability .....Passed MIL-STD-202F, Method 208
Insertion Force .....179 Grams (6.3 oz.) average with a .018" (0,46) dia. polished steel pin
Withdrawal Force .....63 Grams (2.2 oz.) average with a .018" (0,46) dia. polished steel pin

ELECTRICAL
Contact Resistance .....10 Milliohms max.
Contact Rating.....3 Amps
Capacitance .....1.0 pF per MIL-STD-202, Method 305 (contact to contact)
Insulation Resistance.....5,000 Megohms min. @ 500 VDC per MIL-STD-1344, Method 3003.1
Dielectric Withstanding Voltage .....1,000 Volts RMS per MIL-STD-1344, Method 3001.1

ENVIRONMENTAL
Humidity .....Passed MIL-STD-1344, Method 1002.2, Cond. II
Thermal Shock .....Passed MIL-STD-1344, Method 1003.1, Cond. A
Operation Temperature ....Gold inner contact -55°C to +125°C
Tin/lead inner contact -55°C to +105°C

Products for Industrial & Commercial Applications
Dimensions are shown for reference purposes only.
Dimensions are in inches and millimeters unless otherwise specified. Values in brackets are metric equivalents.
Specifications subject to change.
Technical Support Center
1-800-522-6752
www.tycoelectronics.com

Crystal Oscillator Sockets

500 Series



504-AG11D

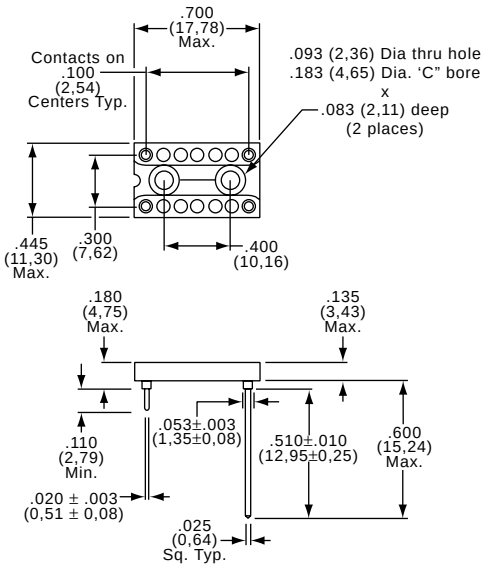

FEATURES:

- Accommodates any component leads with .016" to .021" (0,41 x 0,53) diameter
- Withstands most severe environmental conditions including military requirements of high shock and vibration
- Low profile
- Contact features closed end construction eliminating any solder or flux wicking problems
- Two-piece tapered entry socket terminal features a four-finger, inner contact and machined outer sleeve

APPLICATION DIMENSIONS:

- PCB Thickness Range: Standard .062" and .092" (1,57 and 2,34)
- PCB Hole Size Range: .035" ± .003" (0,89 ± 0,08) PC tail, .055" ± .003" (1,40 ± 0,08) solderless wrap
- IC Pin Dimension Range: .016" to .021" (0,41 to 0,53) round lead, .105"(2,67) min. length

MATERIAL SPECIFICATIONS:

Insulator.....Thermoplastic polyester, UL rated 94V-0
Inner Contact.....Four-fingered beryllium copper, gold over nickel plated
Outer Sleeve .....Machined brass, gold over nickel or tin/lead over copper plated

PART NUMBER / STANDARD CONFIGURATIONS

Part Number	Number of Contacts	Contact Plating	Sleeve Plating	Termination Style
504-AG10D	4	Gold	Gold	Printed Circuit
504-AG11D			Tin/Lead	
504-AG12D		Tin/Lead	Tin/Lead	
504-AG10F		Gold	Gold	Solderless Wire Wrap
504-AG11F			Tin/Lead	

PERFORMANCE SPECIFICATIONS:

MECHANICAL
Vibration .....Passed MIL-STD-1344, Method 2005.1, Condition II, 10 G's
Shock.....Passed MIL-STD-1344, Method 2004.1, Condition C, 100 G's
Durability .....Passed MIL-STD-1344, Method 2016
Normal Force .....200 Grams (7.1 oz.) average with .018" (0,46) dia. polished steel pin
Inner Contact Retention .....7.5 Lbs. per line average
Sleeve Retention in Plastic.....3.0 Lbs. per line minimum
Solderability .....Passed MIL-STD-202F, Method 208
Insertion Force .....179 Grams (6.3 oz.) average with a .018" (0,46) dia. polished steel pin
Withdrawal Force .....63 Grams (2.2 oz.) average with a .018" (0,46) dia. polished steel pin

ELECTRICAL
Contact Resistance .....10 Milliohms max.
Contact Rating.....3 Amps
Capacitance .....1.0 pF per MIL-STD-202, Method 305 (contact to contact)
Insulation Resistance.....5,000 Megohms min. @ 500 VDC per MIL-STD-1344, Method 3003.1
Dielectric Withstanding Voltage .....1,000 Volts RMS per MIL-STD-1344, Method 3001.1

ENVIRONMENTAL
Humidity .....Passed MIL-STD-1344, Method 1002.2, Cond. II
Thermal Shock .....Passed MIL-STD-1344, Method 1003.1, Cond. A
Operation Temperature ....Gold inner contact -55°C to +125°C
Tin/lead inner contact -55°C to +105°C

Note: Before ordering, see Cross Reference in Section 15 for equivalent Tyco Electronics Part Number.

Products for Industrial & Commercial Applications
Dimensions are shown for reference purposes only.
Dimensions are in inches and millimeters unless otherwise specified. Values in brackets are metric equivalents.
Specifications subject to change.
Technical Support Center
1-800-522-6752
www.tycoelectronics.com

Transistor & IC Low Profile Sockets

8059 Series



8059-2G7

FEATURES:

The 8059 Series TO-5 transistor sockets are manufactured with a beryllium copper precision four fingered inner contact and brass outer sleeve. Insulators are molded in five brilliant polyamide colors, for rapid visual identification of socket pin count or pin circle. This inexpensive family of transistor sockets is available with either gold or tin/lead sleeves for even more economy.

- Ultra low profile
- Closed entry design -no distortion or damage to contact with misaligned or oversized lead
- Gold plated contacts, choice of gold or tin/lead plated leads
- Sockets accept .016 to .020 (0,41 to 0,51) diameter leads
- Five brilliant colors for easy identification when mounted on PCB
- Closed end sleeve design completely eliminates the possibility of flux or solder wicking into the contact area
- Large tapered entry for easy insertion of transistor devices

MATERIAL SPECIFICATIONS:

Insulator.....Glass filled polyamide nylon, UL rated 94V-0
Sleeve .....Brass
Contact .....Beryllium copper
Plating
Contact .....Gold
Sleeve .....Tin/lead or gold

PERFORMANCE SPECIFICATIONS:

MECHANICAL
Vibration .....Passed MIL-STD-1344, Method 2005, 15 G's, 10 to 2,000 cycles
Mechanical Shock.....Passed MIL-STD-1344, Method 2004, 10 G's, 1 to 9,000 cycles
Durability .....50 Insertions and withdrawals, MIL-S-83502/1, Sec 4.7.12
Insertion Force .....4.0 lb. Max., .020 dia. +.0000 probe -.0002
Withdrawal Force .....14 Grams (1/2 oz.) min., .016 dia. +.0002 probe -.0001
Solderability .....MIL-STD-202, Method 208

ELECTRICAL
Bulk Contact
Resistance .....20 Milliohms max per MIL-S-83502/1
Current Rating.....3 Amps DC
Operating Voltage.....750 VDC
Dielectric Withstading
Voltage .....600 VAC per MIL-STD-1344, Method 3001
Insulation Resistance.....2 x 10^6 Megohms, MIL-STD-1344, Method 3003
Capacitance .....2pF Max., MIL-STD-202, Method 305

ENVIRONMENTAL
Operating Temperature ....-55°C to +125°C
Corrosive Atmosphere ....30 Milliohms, amonium polysulfide 10 ppm per MIL-S-83502/1 sec. 4.7.17
Moisture Resistance .....30 Milliohms max., MIL-STD 202, Method 106
Thermal Shock .....MIL-STD-1344, Method 1003

Note: Before ordering, see Cross Reference in Section 15 for equivalent Tyco Electronics Part Number.

Products for Industrial & Commercial Applications
Dimensions are shown for reference purposes only.
Dimensions are in inches and millimeters unless otherwise specified. Values in brackets are metric equivalents.
Specifications subject to change.
Technical Support Center
1-800-522-6752
www.tycoelectronics.com

Transistor & IC Low Profile Sockets

8059 Series

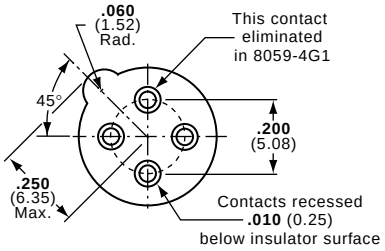

Figure 1

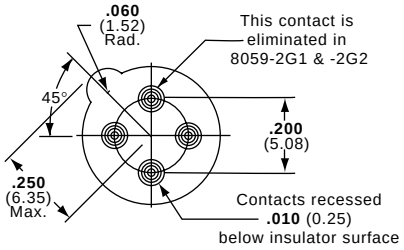

Figure 2

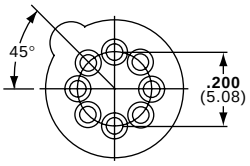

Figure 3

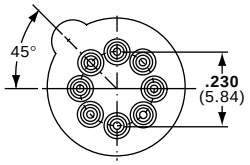

Figure 4

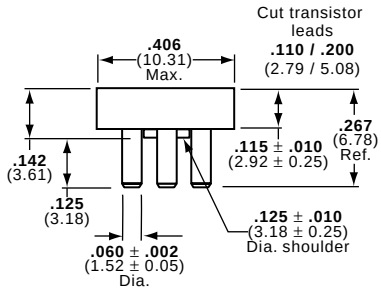

Figure A

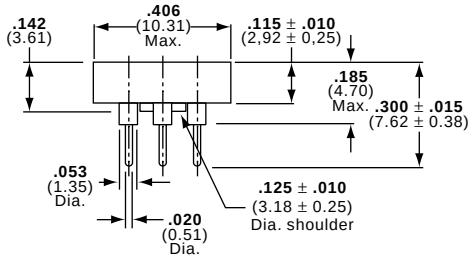

Figure B

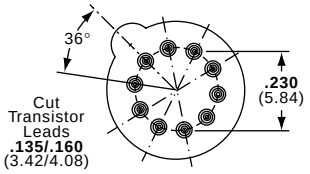

Figure 5

PART NUMBER / STANDARD CONFIGURATIONS

Part Number	Figure	Number of Contacts	Pin Circle	Contact Plating	Sleeve Plating	Insulator Color
8059-4G1	1, A	3	.200 (5,08)	Gold	Gold	Red
8059-2G1	2, B			Gold	Gold	
8059-2G2				Gold	Tin/Lead	
8059-4G4	1, A	4		Gold	Gold	Blue
8059-2G3	2, B			Gold	Gold	
8059-2G4				Gold	Tin/Lead	
8059-2G5	3, B	8		Gold	Gold	Green
8059-2G6				Gold	Tin/Lead	
8059-2G7	4, B		.230 (5,84)	Gold	Gold	Orange
8059-2G8				Gold	Tin/Lead	
8059-2G9	5, B	10		Gold	Gold	Yellow
8059-2G10				Gold	Tin/Lead	

Note: Before ordering, see Cross Reference in Section 15 for equivalent Tyco Electronics Part Number.

Products for Industrial & Commercial Applications
Dimensions are shown for reference purposes only.
Dimensions are in inches and millimeters unless otherwise specified. Values in brackets are metric equivalents.
Specifications subject to change.
Technical Support Center
1-800-522-6752
www.tycoelectronics.com

Transistor Sockets

8058 & 8060 Series



8060-1G11



8060-1G6

FEATURES:

The 8058/8060 family of teflon sockets, with beryllium copper contacts, offers many features which allow them to be utilized in the most severe applications. Low profile for close board spacing, closed sleeve for 100% prevention of solder and flux wicking. A choice of many terminal styles for greater packaging selection and ease of use. Many of these sockets meet or exceed MIL-S-83502/2 and MIL-S-83502/5.

- Two-piece socket terminal - four fingered inner contact and machined outer sleeve
- Low profile for tight space applications
- Sockets accept 0,41/.016 to 0,51/.020 diameter leads
- Printed circuit, solder pocket and turret style terminations available
- Closed entry-design no distortion or damage to contact with misaligned or oversized leads

MATERIAL SPECIFICATIONS:

Insulator .....Teflon
Sleeve .....Brass
Contact Plating .....Beryllium copper
Plating .....Contact gold, sleeve gold

Note: Before ordering, see Cross Reference in Section 15 for equivalent Tyco Electronics Part Number.

PERFORMANCE SPECIFICATIONS:

MECHANICAL

Vibration .....Passed MIL-STD -1344, Method 2005, 15 G's, 10 to 2,000 cycles
Mechanical Shock.....Passed MIL-STD -1344, Method 2004, 10 G's, 1 to 9,000 cycles
Durability .....50 Insertions and withdrawals, MIL-S-83502/ 1, Sec. 4.7.12
Insertion Force .....4.0 lb. max., .020 dia. +.0000 probe -.0002
Withdrawal Force .....14 Grams (1/2 oz.) min. .016 dia. +.0002 probe -.0001
Solderability .....MIL-STD- 202, Method 208

ELECTRICAL

Bulk Contact Resistance .....20 Milliohms max. per MIL-S-83502/1
Current Rating.....3 Amp DC, contact rating
Operating Voltage.....500 VDC @ atmospheric pressure
Dielectric Withstanding Voltage .....600 VAC per MIL-STD -1344 , Method 3001
Insulation Resistance.....2 x 10^6 Megohms, MIL-STD -1344, Method 3003
Capacitance.....2 pF Max., MIL-STD -202, Method 305

ENVIRONMENTAL

Operating Temperature ....-55°C to +125°C
Corrosive Atmosphere ....30 milliohms, ammonium polysulfide 10 ppm per MIL-S-83502/1 Sec. 4.7.17
Moisture Resistance .....30 Milliohms max., MIL-STD -202, Method 106
Thermal Shock .....MIL-STD -1344, Method 1003

Products for Industrial & Commercial Applications
Dimensions are shown for reference purposes only.
Dimensions are in inches and millimeters unless otherwise specified. Values in brackets are metric equivalents.
Specifications subject to change.
Technical Support Center
1-800-522-6752
www.tycoelectronics.com

Transistor Sockets

8058 & 8060 Series

PART NUMBER / STANDARD CONFIGURATIONS

Part Number	Figure	No. of Contacts	Pin Circle	A	B	C	D	E*	F Max.	Terminal Style	Mounting Hole	Transistor Lead Length	Polarization Figure
M8058-45G1	1	3	.200	.200	.265	.373	.410	.160	.406	Turret	B	.156/.218	N
M8058-1G29	3	3	.200	.200	.270	.373	.410	.140	.351	Solder Pocket			
8058-1G29	3	3	.200	.200	.270	.373	.410	.140	.351				
8058-1G23	4	3	.200	.200	.270	.373	.410	.302	.544	Printed Circuit	—		
M8058-1G23	4	3	.200	.200	.270	.373	.410	.302	N/A				
8058-1G59	6	3	.200	.200	.165	N/A	.410	.125	N/A			.125/.155	P
8058-38G6	6	3	.200	.200	.165	N/A	.410	.315	N/A				
8058-1G62	7	3	.200	.200	.270	.373	.410	.500	.703	Wirewrap	B		N
M8058-45G2	1	4	.200	.200	.265	.373	.410	N/A	.406	Turret		.156/.218	
M8058-1G30	3	4	.200	.200	.265	.373	.410	.140	.377	Solder Pocket			
8058-1G30	3	4	.200	.200	.270	.373	.410	.140	.347				
M8058-1G24	4	4	.200	.200	.270	.373	.410	.347	.550	Printed Circuit	—		
8058-1G24	4	4	.200	.200	.270	.373	.410	.317	.550				
8058-1G63	7	4	.200	.200	.270	.373	.410	.500	.703	Wirewrap	B	.125/.155	
8058-1G58	2	5	.200	.200	.270	.373	.410	.094	.331	Turret		.156/.218	
8058-1G61	3	5	.200	.200	.270	.373	.410	.140	.336	Solder Pocket			
M8058-1G39	2	6 at 45°	.200	.200	.270	.373	.410	.094	.300	Turret			
8058-1G43	3	6 at 60°	.200	.200	.270	.373	.410	.140	.370	Solder Pocket			
M8058-1G18	3	6 at 45°	.200	.200	.270	.373	.410	.140	.370				
8058-1G42	4	6 at 60°	.200	.200	.270	.373	.410	.317	.561	Printed Circuit	—		
M8058-1G33	4	6 at 45°	.200	.200	.270	.373	.410	.317	.561				
8058-1G48	6	6 at 60°	.200	.200	.165	N/A	.410	.125	N/A			.125/.155	P
8058-1G52	6	6 at 45°	.200	.200	.165	N/A	.410	.125	N/A				
M8058-1G37	2	8	.200	.200	.270	.373	.410	.094	.336	Turret	B	.156/.218	N
M8058-1G19	3	8	.200	.200	.270	.373	.410	.140	.377	Solder Pocket			
8058-1G19	3	8	.200	.200	.270	.373	.410	.140	.377				
8058-1G57	3	8	.200	.200	.270	.373	.410	.140	.315				
M8058-1G32	4	8	.200	.200	.270	.373	.410	.317	.550	Printed Circuit	—		
8058-1G32	4	8	.200	.200	.270	.373	.410	.317	.550				
8058-39G1	5	8	.200	.330	.375	.373	.410	.187	.505				
8058-39G3	5	8	.200	.380	.375	.373	.410	.150	.470				
8058-39G5	5	8	.200	.380	.375	.373	.410	.150	.470				
8058-1G49	6	8	.200	.200	.165	N/A	.410	.125	N/A			.125/.155	P
8058-1G47	2	8	.230	.230	.270	.373	.410	.094	.300	Turret	B	.156/.218	N
8058-1G46	3	8	.230	.230	.270	.373	.410	.138	.346	Solder Pocket			
8058-1G45	4	8	.230	.230	.270	.373	.410	.302	.534	Printed Circuit	—		
8058-39G4	5	8	.230	.380	.375	.373	.410	.155	.467				PN
8058-39G6	5	8	.230	.380	.375	.373	.410	.150	.467				
8058-1G50	6	8	.230	.230	.165	N/A	.410	.125	N/A			.125/.165	P
M8058-1G38	2	10	.230	.230	.270	.373	.410	.094	.331	Turret	B	.156/.218	N
M8058-1G22	3	10	.230	.230	.270	.373	.410	.141	.377	Solder Pocket			
M8058-1G31	4	10	.230	.230	.270	.373	.410	.317	.561	Printed Circuit	—		
8058-1G31	4	10	.230	.230	.270	.373	.410	.317	.561				
8058-24G1	5	10	.230	.380	.375	.373	.410	.187	.505				
8058-1G34	6	10	.230	.230	.165	N/A	.410	.125	N/A			.125/.155	P
M8058-1G91	6	10	.230	.230	.165	N/A	.410	.125	N/A				
8058-1G55	5	12	.250	.380	.375	.373	.410	.155	.467			.156/.218	N
8058-1G51	6	12	.280	.280	.165	N/A	.410	.125	N/A			.125/.155	P

* Dimension **E** ± .031 (0,79)

Note: Before ordering, see Cross Reference in Section 15 for equivalent Tyco Electronics Part Number.

Products for Industrial & Commercial Applications
Dimensions are shown for reference purposes only.
Dimensions are in inches and millimeters unless otherwise specified. Values in brackets are metric equivalents.
Specifications subject to change.
Technical Support Center
1-800-522-6752
www.tycoelectronics.com

Transistor Sockets

8058 & 8060 Series

PART NUMBER / STANDARD CONFIGURATIONS

Part Number	Figure	Number of Contacts	Pin Circle	A	B	C	D	E*	F Max.	Terminal Style	Mtg. Hole Figure	Transistor Lead Length	Polarization Figure
8060-1G5	3	3	.100	.100	.268	.227	.255	.146	.350	Solder Pocket	A	.156/.218	N
8060-1G17	3	3	.100	.100	.320	.227	.255	.084	.427				
8060-1G9	2	3	.100	.100	.268	.227	.255	.094	.372	Turret			
8060-1G11	4	3	.100	.100	.330	.227	.255	.240	.580	Printed Circuit	—		
8060-1G7	5	3	.100	.200	.410	.227	.255	.170	.616				
8060-1G3	6	3	.100	.150	.195	N/A	.255	.103	N/A			.125/.155	P
8060-1G13	6	3	.100	.100	.195	N/A	.255	.103	N/A				
8060-1G6	3	4	.100	.100	.265	.227	.255	.146	.350	Solder Pocket	A	.156/.218	N
8060-1G10	2	4	.100	.100	.265	.227	.255	.094	.310	Turret			
8060-1G12	4	4	.100	.100	.330	.227	.255	.240	.553	Printed Circuit	—		
8060-1G8	5	4	.100	.200	.390	.227	.255	.187	.530				
8060-1G4	6	4	.100	.150	.195	N/A	.255	.103	N/A			.125/.155	P
8060-1G22	6	4	.100	.100	.195	N/A	.255	.295	N/A				

* Dimension **E** ± .031 (0,79)

All part number prefixed with (M) meet MIL-83502/1 or MIL-83502/6.

Note: Before ordering, see Cross Reference in Section 15 for equivalent Tyco Electronics Part Number.

Products for Industrial & Commercial Applications
Dimensions are shown for reference purposes only.
Dimensions are in inches and millimeters unless otherwise specified. Values in brackets are metric equivalents.
Specifications subject to change.
Technical Support Center
1-800-522-6752
www.tycoelectronics.com

Transistor Sockets

8058 & 8060 Series

Figure A
Recommended Chassis Cutout for all 8060 Series panel mount applicaions

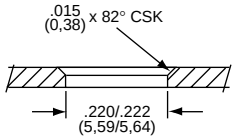

Figure B
Recommended Chassis Cutout for all 8058 Series panel mount applicaions

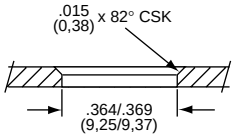

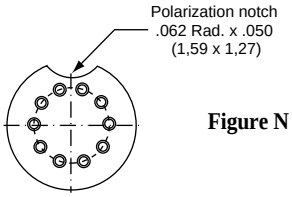

Figure N

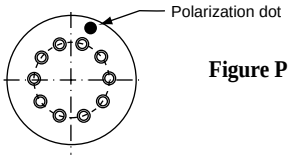

Figure P

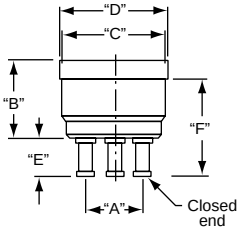

Figure 1

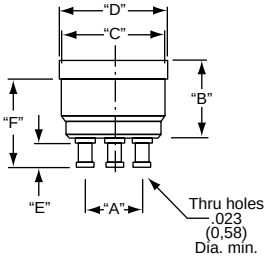

Figure 2

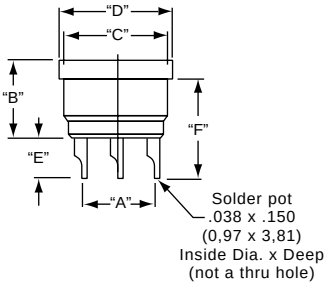

Figure 3

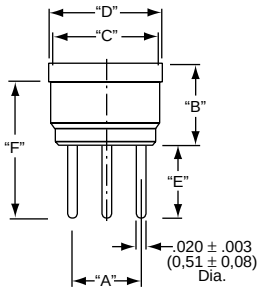

Figure 4

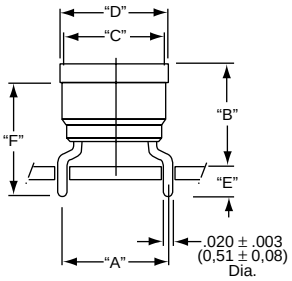

Figure 5

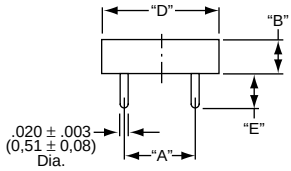

Figure 6

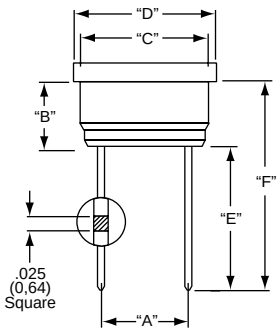

Figure 7

Note: Before ordering, see Cross Reference in Section 15 for equivalent Tyco Electronics Part Number.

Products for Industrial & Commercial Applications
Dimensions are shown for reference purposes only.
Dimensions are in inches and millimeters unless otherwise specified. Values in brackets are metric equivalents.
Specifications subject to change.
Technical Support Center
1-800-522-6752
www.tycoelectronics.com

Lamp Sockets

8060 Series



8060-1G16

FEATURES:

The high reliability four-fingered contact and machined sleeve, TEFLON, 8060 family of L.E.D. sockets offer the ability to socket on a lead L.E.D. lamp. Available with solder pocket, turret or printed circuit terminals for convenient packaging. These sockets eliminate the need to unsolder a device when service is required, yet will stand up to many severe environments.

- Fast "Push-fit" mounting assures low installation cost
- Contact reliability achieved through smooth wiping leaf contact
- Low contact resistance

MATERIAL SPECIFICATIONS:

Insulator.....TEFLON
Contact .....Beryllium copper
Finish: Gold
Terminal Sleeve .....Brass
Finish: Gold

Note: Before ordering, see Cross Reference in Section 15 for equivalent Tyco Electronics Part Number.

PERFORMANCE SPECIFICATIONS:

MECHANICAL
Vibration .....Passed MIL-STD -1344, Method 2005, 15 G's, 10 to 2,000 cycles
Mechanical Shock.....Passed MIL-STD -1344, Method 2004, 10 G's, 1 to 9,000 cycles
Durability .....50 Insertions and withdrawals, MIL-S-83502/1, sec. 4.7.12
Insertion Force .....4.0 Lb. max., .020 dia. +.0000 probe -.0002
Withdrawal Force .....14 Grams (1/2 Oz.) min., .016 dia. +.0002 probe -.0001
Solderabiblity .....MIL-STD-202, Method 208

ELECTRICAL
Bulk Contact
Rating .....20 Milliohms max. per MIL-S-83502/1
Current Rating.....3 Amp DC
Operating Voltage.....750 VDC
Dielectric Withstanding
Voltage .....600 VAC per MIL-STD-1344, Method 3001
Insulation Resistance.....5,000 Megohms @ 500 VDC per MIL-STD-1344, Method 3003.1
Capacitance .....2 pF Max. per MIL-STD-202, Method 305

ENVIRONMENTAL
Operating Temperature ....-55°C to +125°C
Corrosive Atmosphere ....30 Milliohms, ammonium polysulfide 10 ppm per MIL-S-83502/1 sec. 4.7.17
Moisture Resistance .....30 Milliohms max. per MIL-STD-202, Method 106
Thermal Shock .....MIL-STD-1344, Method 1003

Products for Industrial & Commercial Applications
Dimensions are shown for reference purposes only.
Dimensions are in inches and millimeters unless otherwise specified. Values in brackets are metric equivalents.
Specifications subject to change.
Technical Support Center
1-800-522-6752
www.tycoelectronics.com

Lamp Sockets

8060 Series

Figure 1

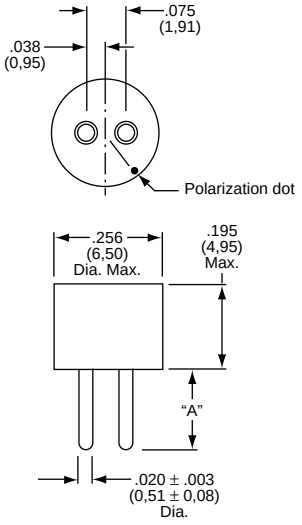

Figure 2

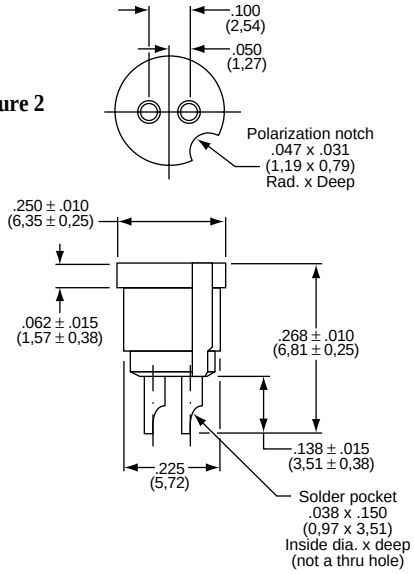

Figure 3

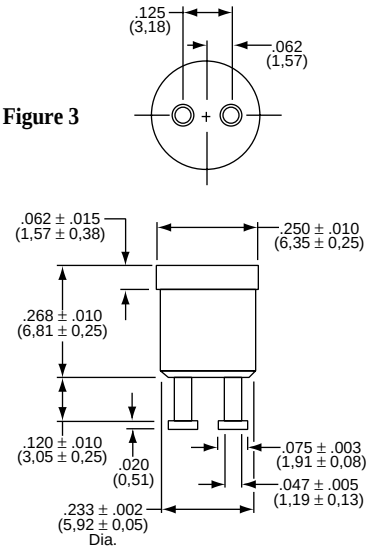

Figure 4

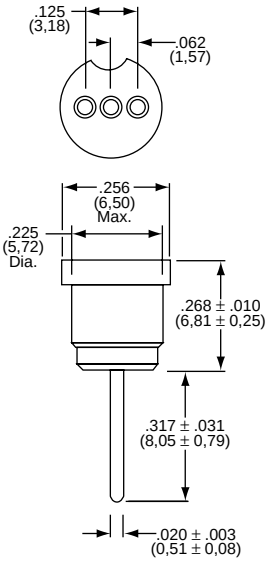

Recommended mounting hole .221 ±.001 (5,61 ± 0,03) - Break lending edge .015 (0,38) x 82° countersink

PART NUMBER / STANDARD CONFIGURATIONS

Part Number	Figure	Accept Lead Diameter	Cut Component Lead Length	A
8060-1G23	1	.016 – .020 (0,41 – 0,51)	.125 (3,18) minimum	.105 (2,67)
8060-1G25				.305 (7,75)
8060-1G34	2			—
8060-1G16	3	.025 (0,63)		—
8060-1G20	4	.016 – .020 (0,41 – 0,51)		.317 (8,05)

Note: Before ordering, see Cross Reference in Section 15 for equivalent Tyco Electronics Part Number.

Products for Industrial & Commercial Applications
Dimensions are shown for reference purposes only.
Dimensions are in inches and millimeters unless otherwise specified. Values in brackets are metric equivalents.
Specifications subject to change.
Technical Support Center
1-800-522-6752
www.tycoelectronics.com

TO-3 Power Transistor Sockets

8080-1G Series



8080-1G7

FEATURES:

The 8080-1G family of TO-3 Power Transistor Sockets is used for both small and large signal devices. Used in power supplies, power amplifiers, sweep amplifiers, and machine controlled equipment. These sockets are designed to constantly perform.

- Contact rating 10 amps. 20 Amps for 8080-1G44 VDE style
- Sockets accept components with .040 (1,02) .002 -.003 (+0,05 -0,08) diameter lead or .060 (1,52) +.002 -.003 (+0,05 -0,08) diameter leads
- Integral mounting saddle has 20 inch pounds min. thread strength
- Diallyl phthalate and phenolic insulators

MATERIAL SPECIFICATIONS:

Insulator.....Black phenolic or green diallyl phthalate, UL rated 94V-0
Mounting Saddle.....Brass, heat treated
Saddle Plating .....Electro-tin
Insulating Washer .....Mica .003 (0,08) thick
Ordered separately-part number 8038-3P1, Fig. 2
Contacts.....Beryllium copper
Contact Plating .....Tin, silver or gold

Note: Before ordering, see Cross Reference in Section 15 for equivalent Tyco Electronics Part Number.

PERFORMANCE SPECIFICATIONS:

MECHANICAL
Vibration .....10 - 2,000 Hz, MIL-STD-202, Method 204, Condition B, transistor installed
Durability .....50 Insertions per MIL-STD-12883
Insertion Force .....6 Pounds max. per MIL-STD-12883
Withdrawal Force .....18 Pounds min., 6 pounds max. per MIL-STD-12883
Thread Strength.....20 Inch pounds minimum

ELECTRICAL
Bulk Resistance.....Gold 15 milliohms, per MIL-STD-12883
Tin 25 milliohms max.
Silver 25 milliohms max.
Current Rating.....10 Amps DC
Insulation Resistance.....1,000 Megohms per MIL-STD-202
Dielectric Withstanding Voltage .....1,500 Volts RMS

ENVIRONMENTAL
Operating Temperature ....-55°C to +125°C.
Mechanical Shock.....Passed MIL-STD-12833, with transistor inserted at test gage

Products for Industrial & Commercial Applications
Dimensions are shown for reference purposes only.
Dimensions are in inches and millimeters unless otherwise specified. Values in brackets are metric equivalents.
Specifications subject to change.
Technical Support Center
1-800-522-6752
www.tycoelectronics.com

TO-3 Power Transistor Sockets

8080-1G Series

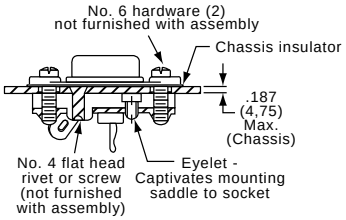

Figure 1

8038-3P1
Mica Insulator

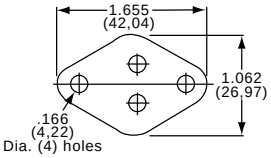

Figure 2

Recommended Chassis Cutout
Standard

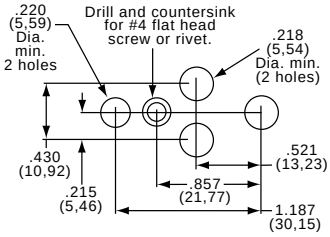

Recommended Chassis Cutout
8080-1G17 and 8080-1G45

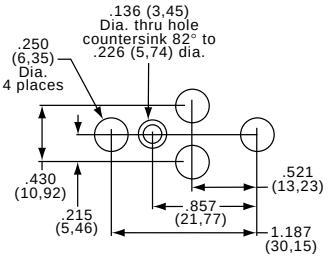

Figure 3

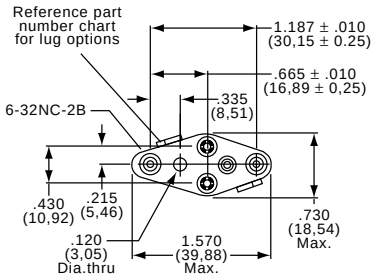

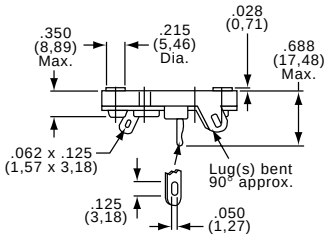

Figure 4

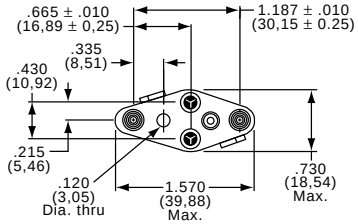

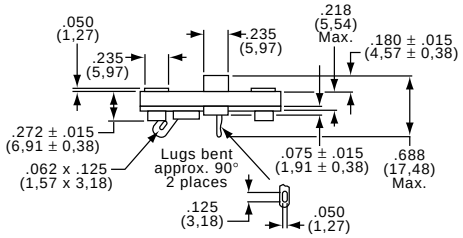

Figure 5

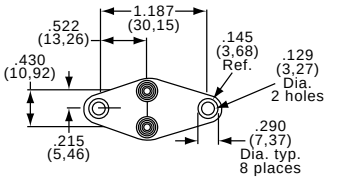

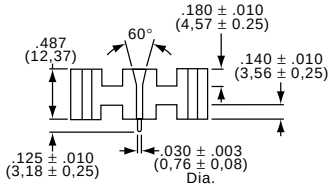

Figure 6

PART NUMBER / STANDARD CONFIGURATIONS

.040 Diameter Pin				
Part Number	**Insulator**	**Contact Plating**	**Solder Lugs**	**Figure**
8080-1G1	Phenolic	Electro-Tin	Two Solder Lugs	4
8080-1G45				5
8080-1G13	Diallyl Phthalate			4
8080-1G27	Phenolic	Silver		
8080-1G2	Diallyl Phthalate			
8080-1G7	Phenolic	Gold		
8080-1G10	Diallyl Phthalate			
8080-1G3	Phenolic	Electro-Tin	One Solder Lug	4
8080-1G24	Diallyl Phthalate			
8080-1G29	Phenolic	Silver		
8080-1G4	Diallyl Phthalate			
8080-1G9	Phenolic	Gold		
8080-1G25	Diallyl Phthalate			
8080-1G44	Thermoplastic Polyester	Gold/Tin/Lead	P.C. Mount	7

PART NUMBER / STANDARD CONFIGURATIONS

.060 Diameter Pin				
Part Number	**Insulator**	**Contact Plating**	**Solder Lugs**	**Figure**
8080-1G15	Phenolic	Electro-Tin	Two Solder Lugs	4
8080-1G17				5
8080-1G31	Diallyl Phthalate			4
8080-1G32	Phenolic	Silver		
8080-1G16	Diallyl Phthalate			
8080-1G33	Phenolic	Gold		
8080-1G34	Diallyl Phthalate			
8080-1G20	Phenolic		No Lugs	
8080-1G14	Phenolic	Electro-Tin	One Solder Lug	
8080-1G35	Diallyl Phthalate			
8080-1G36	Phenolic	Silver		
8080-1G37	Diallyl Phthalate			
8080-1G38	Phenolic	Gold		
8080-1G39	Diallyl Phthalate			

Note: Before ordering, see Cross Reference in Section 15 for equivalent Tyco Electronics Part Number.

Products for Industrial & Commercial Applications
Dimensions are shown for reference purposes only.
Dimensions are in inches and millimeters unless otherwise specified. Values in brackets are metric equivalents.
Specifications subject to change.
Technical Support Center
1-800-522-6752
www.tycoelectronics.com

Push Fit Test Jacks

8000 Series



8000-M65

FEATURES:
(8000-MG, 8007, and 8011 Series)

The 8000 Series is a line of sub-miniature "Push-Fit" test jacks used in many applications such as meter probe inputs, crystal sockets, circuit test point identification and many others. A complete line of test points which will accomodate .040 (1,02); .050 (1,27); .080 (2,03) and .090 (2,29) diameter pins.

- Teflon insulator for extreme environments
- Gold or tin plating available
- Brightly colored Nylon for fast test point identification
- Tapered entry to guide test probe

Note: Before ordering, see Cross Reference in Section 15 for equivalent Tyco Electronics Part Number.

PERFORMANCE SPECIFICATIONS:

ELECTRICAL
Bulk Contact
Resistance .....10 Milliohms maximum
Current Rating.....5 Amps DC
Operating Voltage.....1,500 Volts RMS @ sea level
350 Volts RMS @ 50,000 feet
Dielectric Withstanding
Voltage .....2,500 Volts RMS @ sea level
500 Volts RMS @ 50,000 feet
Insulation Resistance.....5,000 x 10^6 Ohms
Capacitance .....4pF @ 5 MHz.

ENVIRONMENTAL
Operating Temperature ....-65°C to +125°C

Products for Industrial & Commercial Applications
Dimensions are shown for reference purposes only.
Dimensions are in inches and millimeters unless otherwise specified. Values in brackets are metric equivalents.
Specifications subject to change.
Technical Support Center
1-800-522-6752
www.tycoelectronics.com

Push Fit Test Jacks

8000 Series

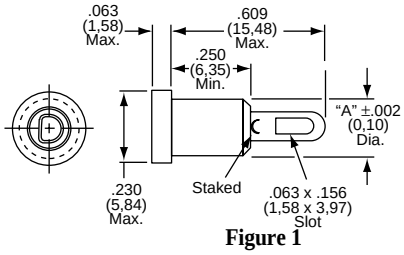

Figure 1

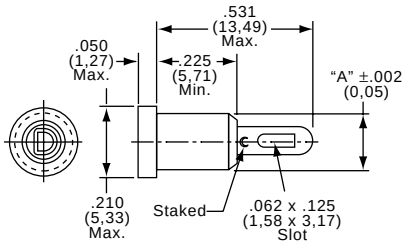

Figure 2

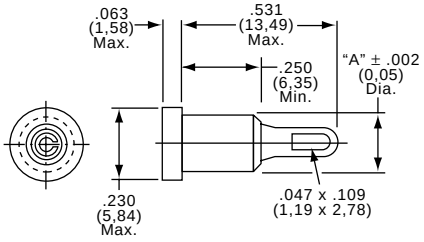

Figure 3

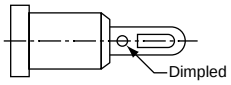

Figure 1A

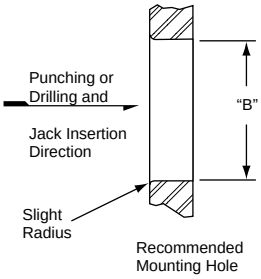

PART NUMBER / STANDARD CONFIGURATIONS

Part Number	Figure	A *	Insulator Material & Color	Contact Material and Plating	Mtg. Hole B **	Probe Diameter
8007-1G1	2	.175	TEFLON, Natural	Phos. Bronze, Gold	.162	.040
8007-1G5				Phosphor Bronze, Tin		
8000-MG3	1	.185		Phos. Bronze, Gold	.172	.050
8000-MG4				Phosphor Bronze, Tin		
8000-MG5	1A	.177	Nylon, Blue	Phos. Bronze, Gold		
8000-MG6				Phosphor Bronze, Tin		
8000-MG8			Nylon, White			
8011-8G1	3	.177	Nylon, Blue	Beryllium Copper, Tin	.080	
8011-8G2			Nylon, Black			
8011-8G3			Nylon, Red			

Part Number	Figure	A *	Insulator Material & Color	Contact Material and Plating	Mtg. Hole B **	Probe Diameter
8011-8G7	3	.177	Nylon, Green	Beryllium Copper, Tin	.172	.080
8011-8G8			Nylon, White			
8011-8G9			Nylon, Orange			
8011-8G10			Nylon, Yellow			
8011-8G11			Nylon, Brown			
8011-8G12			Nylon, Gray			
8011-8G13			Nylon, Purple			
8011-8G6			Nylon, Blue			.090
8011-8G15			Nylon, Black			
8011-8G16			Nylon, Red			

* Dimension " A" ± .002 (0,05)
** Dimension " B" ± .001 (0,03)

Note: Before ordering, see Cross Reference in Section 15 for equivalent Tyco Electronics Part Number.

Products for Industrial & Commercial Applications
Dimensions are shown for reference purposes only.
Dimensions are in inches and millimeters unless otherwise specified. Values in brackets are metric equivalents.
Specifications subject to change.
Technical Support Center
1-800-522-6752
www.tycoelectronics.com

Printed Circuit Test Jacks

8041 Series



8041-1G4-1

FEATURES:

The 8041 Series printed wiring board mounted test jacks require very little mounting space. Used in many applications as signal test points, they are also used as electromechanical interfaces from daughter cards to mother boards. Test jack M8041-15G is qualified to MIL-C-39024/11. This series test jack accepts .080 (2,03) inch dia. test probes in either side or top side entry models.

- Low profile for close board-to-board stacking
- Test jack cannot be damaged by using oversized probe
- Probe side entry or top and side entry, both qualified to MIL-C-39024/11
- Dimple on printed circuit terminals, retains test jack in P.W.B. during flow soldering
- Ten brilliant insulation colors available for quick test point reference
- Top entry allows test jack to be probed while being used as an interconnection socket

MATERIAL SPECIFICATIONS:

Insulator.....Nylon
Contacts.....Beryllium copper
Platings .....Gold

Note: Before ordering, see Cross Reference in Section 15 for equivalent Tyco Electronics Part Number.

PERFORMANCE SPECIFICATIONS:

MECHANICAL
Vibration .....15 G's, 0 - 55 Hz monitored for 10 micro seconds opening per MIL-STD-202, Method 201
Mechanical Shock.....50 G's, monitored for 10 micro seconds opening per MIL-STD-202, Method 202
Durability .....500 Insertions
Insertion Force .....0.080 (2,03) dia. pin., 5.0 lb. max.
Withdrawal Force .....0.080 (2,03) dia. pin., 227 grams (8 oz.) min.
Permeability .....2.0 Mu max. MIL-I-17214
Solderability .....Passed MIL-STD-202, Method 208

ELECTRICAL
Bulk Contact Resistance .....4 Milliohms @ 5 Amps, military; 5 Milliohms @ 5 Amps, commercial
Current Rating.....5 Amps DC
Operating Voltage .....1,500 Volts RMS @ sea level, 350 Volts RMS @ 50,000 feet
Dielectric Withstanding Voltage .....2,500 Volts RMS @ sea level, 500 Volts RMS @ 50,000 feet per MIL-STD-202, Method 301
Insulation Resistance.....5,000 x 10^6 Ohms, MIL-C-39024 Section 4.6.5
Capacitance .....1 pF @ 5 MHZ

ENVIRONMENTAL
Operating Temperature ....-65°C to +125°C
Salt spray.....4 Milliohms @ 5 Amps per MIL-STD-202, Method 101
Humidity .....1,000 x 10^6 Ohms per MIL-STD-202, Method 101
Thermal Shock .....-65°C to +125°C per MIL-STD-202, Method 107

NOTE: Military Test Reference applies specifically to MIL-Qualified Components.

Products for Industrial & Commercial Applications
Dimensions are shown for reference purposes only.
Dimensions are in inches and millimeters unless otherwise specified. Values in brackets are metric equivalents.
Specifications subject to change.
Technical Support Center
1-800-522-6752
www.tycoelectronics.com

Printed Circuit Test Jacks

8041 Series Commercial

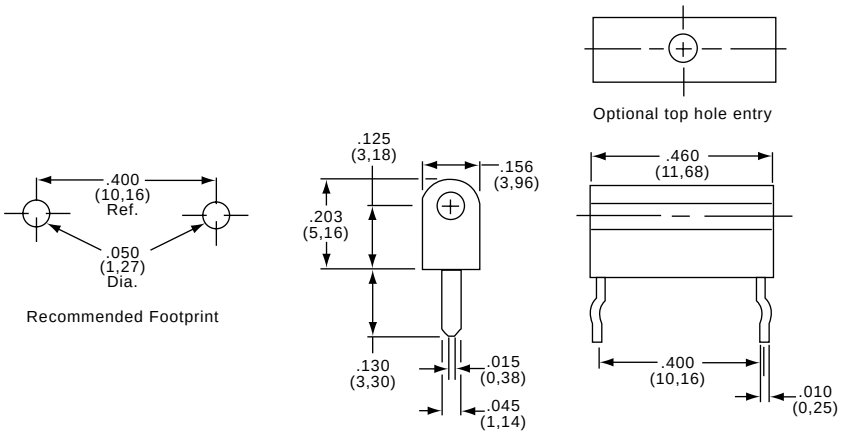

PART NUMBER / STANDARD CONFIGURATIONS

	Side Entry Hole	Top and Side Entry Hole
Insulator Color	**Part Number**	**Part Number**
White	8041-1G9	8041-1G9-1
Red	8041-1G4	8041-1G4-1
Black	8041-1G6	8041-1G6-1
Brown	8041-1G3	8041-1G3-1
Green	8041-1G7	8041-1G7-1
Orange	8041-1G5	8041-1G5-1
Blue	8041-1G8	8041-1G8-1
Yellow	8041-1G2	8041-1G2-1
Gray	8041-1G10	8041-1G10-1
Violet	8041-1G11	8041-1G11-1

Note: Before ordering, see Cross Reference in Section 15 for equivalent Tyco Electronics Part Number.

Products for Industrial & Commercial Applications
Dimensions are shown for reference purposes only.
Dimensions are in inches and millimeters unless otherwise specified. Values in brackets are metric equivalents.
Specifications subject to change.
Technical Support Center
1-800-522-6752
www.tycoelectronics.com

Micro-Miniature Test Jacks

8046 Series Commercial



8046-1G2

FEATURES:

The 8046 Series micro-miniature PC board mounting test jack uses the absolute minimum amount of PC board space. It can be used both as a test jack and an electromechanical interface for mother and daughter boards. The 8046-6G Series is qualified to MIL-C-39024/18. This series test jack accomodates .080" (2,03) diameter probes or interface pins. Commercial versions are available.

- Low profile for close board-to-board spacing
- Can be mounted in a row on .200" (5,08) centers
- Ten brilliant insulation colors available for quick test point reference
- Low cost and high reliability

MATERIAL SPECIFICATIONS:

Insulator.....Teflon
Contact .....Phosphor bronze
Plating .....Gold

PERFORMANCE SPECIFICATIONS:

MECHANICAL
Vibration .....15 G's @ 10 to 2,000 Hz per MIL-STD-202, Method 204
Mechanical Shock.....100 G's per MIL-STD-202, Method 213
Durability .....150 Insertion and withdrawal cycles
Insertion Force .....10 Lbs. max.
Withdrawal Force .....0.5 Lbs. min.
Solderability .....Passed MIL-STD-202, Method 208

ELECTRICIAL
Bulk Contact
Resistance .....4 Milliohms @ 5 Amps, military; 5 milliohms @ 5 Amps commercial
Current Rating.....5 Amps DC
Operating Voltage.....1,000 Volts RMS @ sea level, 350 Volts RMS @ 50,000 feet
Dielectric Withstanding
Voltage .....1,500 Volts RMS @ sea level, 350 Volts RMS @ 50,000 feet, MIL-C-39024, test 2 for 15 seconds
Insulation Resistance.....5,000 x 10^6 Ohms
Capacitance 1pF

ENVIRONMENTAL
Operating Temperature ....-65°C to +150°C
Salt Spray .....4 Milliohms @ 5 Amps, MIL-STD-202, Method 101
Humidity .....1,000 x 10^6 Ohms per MIL-STD-202, Method 103
Thermal Shock .....-65°C to +200°C per MIL-STD-202, Method 107

NOTE: Military Test Reference Applies Specifically to MIL-Qualified Components.

Products for Industrial & Commercial Applications
Dimensions are shown for reference purposes only.
Dimensions are in inches and millimeters unless otherwise specified. Values in brackets are metric equivalents.
Specifications subject to change.
Technical Support Center
1-800-522-6752
www.tycoelectronics.com

Micro-Miniature Test Jacks

8046 Series Commercial

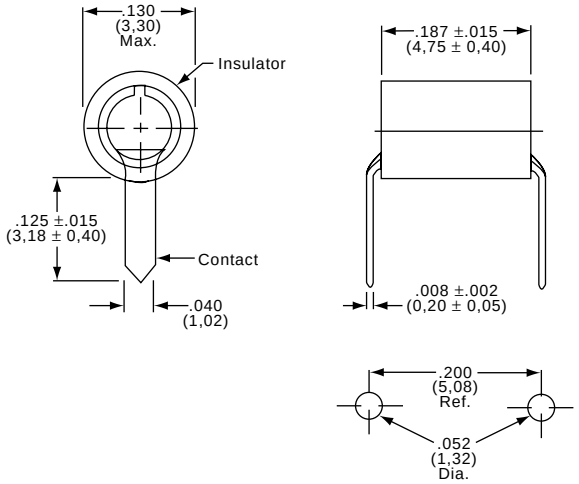

PART NUMBER / STANDARD CONFIGURATIONS

40 Micro-inches Gold	Insulator Color
8046-1G1	Natural
8046-1G2	Yellow
8046-1G3	Brown
8046-1G4	Red
8046-1G5	Orange
8046-1G6	Black
8046-1G7	Green
8046-1G8	Blue
8046-1G9	Gray
8046-1G10	Violet
8046-1G11	White

Note: Before ordering, see Cross Reference in Section 15 for equivalent Tyco Electronics Part Number.

Products for Industrial & Commercial Applications
Dimensions are shown for reference purposes only.
Dimensions are in inches and millimeters unless otherwise specified. Values in brackets are metric equivalents.
Specifications subject to change.
Technical Support Center
1-800-522-6752
www.tycoelectronics.com

Table of Contents

DIP Switches
- Slide Actuator (GD Series) 6002
- Extended or Flush Actuator (AD Series) 6003
- Flush Actuator (AD Series) 6003
- Piano Actuator (AD Series) 6004
- Rotary DIP Switches (MRD and DRD "E" Series) 6005-6008

Slide Switches
- Auto-insertable (ASE/F Series) 6009-6012
- Process Sealed (SE Series) 6013
- Miniature Low-Profile Economy (STS Series) 6014-6017
- Vertical & Right-Angle, Single or Dual Actuator (MSS Series) 6018-6019
- Extended Baton Style, Instrumentation Grade (MHS Series) 6020
- Low Profile, Right Angle, Instrumentation Grade (MMS Series) 6021
- Micro Size, Instrumentation Grade (SSJ, MMS, SSB, SSA Series) 6022-6025
- Wiping Contacts, Consumer Grade (SL, SLS, SLSA Series) 6026-6028
- Rolling Contacts, Miniature, Economy Grade (SLS Series) 6029-6030

Toggle Switches
- Tiny (TT Series) 6031-6037
- Baton (MAT & MTA-WW Series) 6038-6039
- Short Mustang (MTG Series) 6040
- Long Mustang and Miniature Locking (MTL Series) 6041-6042
- Short Toggle, Right Angle, and Vertical Right Angle (MTM-PC, MTM-RA, MTM-VRA, MTA-RA, MTA-VRA Series) 6043-6045

Tact Switches
- 6 x 6 mm, Through Hole (FSMJ Series) 6046
- 6 x 6 mm, Right Angle (FSMRAJ Series) 6047
- 12 x 12 mm, Flush or Extended Actuators (FSM100-104 Series) 6048

Pushbutton Switches
- Tiny (TP, TPA, TPB, TPC, TPD, TPF Series) 6049-6056
- Subminiature (MPA3, MPB Series) 6057
- 15/32 Bushing, Mustang, Wire Lug or PC Tails (MPG Series) 6058
- Snap Action (MPS Series) 6059-6061
- Accessories 6062
- PC Mount, Colored Button, Illuminated or Non-Illuminated (TP-200 Series) 6063-6064

Industrial Controls
- 22 mm (Reliant'22 Series) 6065-6071
- 30 mm (Series 6000) 6072-6074
- 16 mm (Command Series) 6075-6077

Knobs
- Machined Aluminum (K Series) 6078-6085
- Molded Phenolic (P Series) 6086-6094

Power Tool Switches
- 140 Series, 8649 Series, PT Series 6095
- Custom Power Tool Switches 6096

Note: Before ordering, see Cross Reference in Section 15 for equivalent Tyco Electronics Part Number.

Products for Industrial & Commercial Applications

Dimensions are shown for reference purposes only.

Dimensions are in inches and millimeters unless otherwise specified. Values in brackets are metric equivalents.

Specifications subject to change.

Technical Support Center
1-800-522-6752
www.tycoelectronics.com

DIP Switches, Low Profile, Slide Actuator, Through Hole and Surface Mount

Features:

- **Conventional gold wiping contact system**
- **Available in PC and surface mount configurations**
- **Traditional tape seal standard**
- **95% minimum solder coverage (90/10 tin lead)**
- **Withstands wave soldering temperature of 245°C for 3-5 seconds**
- **Heat deflection temperature of 260°C for surface mount compatibility**
- **End stackable (GDS version)**
- **Auto-insertable (GDS and GDB version)**
- **Vacuum pick and place compatible (GDS, GDB and GDH)**
- **Half pitch .050" terminal spacing (GDH version)**
- **Available in optional tape & reel packaging**

Environmental Specifications:

Operating Temperature— -30°C to +85°C

Storage Temperature— -45°C to +100°C

Material Specifications:

Moving Contact—Gold over nickel over copper alloy

Fixed Contact—Gold over copper alloy

Base Material—PPS UL94V-0

Cover Material—PPS UL94V-0

Actuator Material—High temperature polyester/polyamide

Terminal—Tin lead plated over nickel over copper alloy

Typical Performance Characteristics:

Contact Rating—0.4 VA 25ma @ 24 VDC

Initial Contact Resistance—100 Milliohms max.

Insulation Resistance—100 Megohms min. @ 250 VDC

Dielectric Strength—300 VAC

Life Expectancy—1,000 Cycles

Operating Force—60-600 Grams

DIP Switches, Half Pitch, Low Profile

GDH

Half Pitch .050" Terminal Spacing



GDH08S

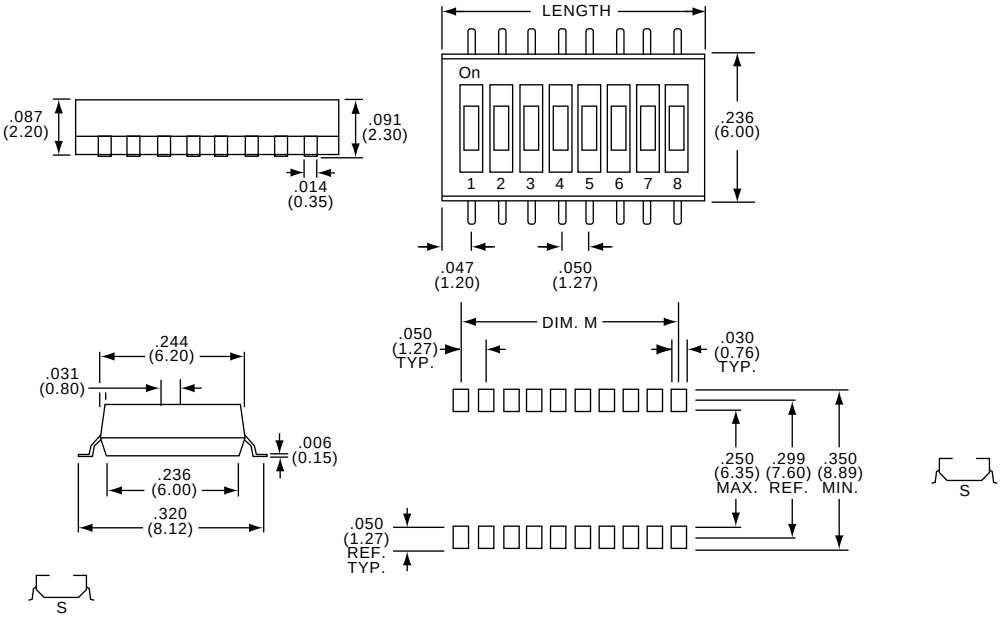

S Model	Tape & Reel	Poles	Length	Dim. M
GDH02S	GDH02STR	2	.144(3.66)	.050(1.27)
GDH04S	GDH04STR	4	.244(6.20)	.150(3.81)
GDH06S	GDH06STR	6	.344(8.75)	.250(6.35)
GDH08S	GDH08STR	8	.444(11.29)	.350(8.89)
GDH10S	GDH10STR	10	.544(13.82)	.450(11.43)

For complete product information, order Catalog 1308390

Products for Industrial & Commercial Applications

Dimensions are shown for reference purposes only.

Dimensions are in inches and millimeters unless otherwise specified. Values in brackets are metric equivalents.

Specifications subject to change.

Technical Support Center
1-800-522-6752
www.tycoelectronics.com

DIP Switches, Extended or Flush Actuator, Auto Insertable, Through Hole and Surface Mount

FEATURES:

- Available in PC and surface mount termination versions.
- High pressure wiping contact allows aqueous or solvent cleaning without tape seal.
- Auto-insertable
- Tape Seal version for vacuum pick-n-place
- Unique design can withstand vapor phase reflow or wave soldering conditions.
- Gas tight contacts
- Shipped in the off position

ENVIRONMENTAL SPECIFICATIONS:

Operating Temperature .....-30°C to + 85°
Storage Temperature .....-45°C to + 100°C
Solder Heat Resistance.....245°C ± 5°C with switch in "off" position 30 seconds when mounted on a .060" thick PCB per MIL-STD202, Method 210
Cleaning.....Aqueous solution or solvent

MATERIAL SPECIFICATIONS:

	Base	Cover	Actuator
PC	Polyester	Polyester	Polyester
SMT	PPS	PPS	Polyamide

TYPICAL PERFORMANCE CHARACTERISTICS:

Contact Rating .....0.4 VA @ 20 VDC max.
Initial Contact Resistance.....50 Milliohms max.
Insulation Resistance .....1,000 Megohms min. @ 100 VDC
Dielectric Strength .....500 VAC
Operating Force .....Less than 1,000 grams
Actuator Travel .....AD/R Series 1.30mm/.050" piano style 25°
Life Expectancy .....1,000 Cycles

No Tape Seal Required

ADE



ADE08

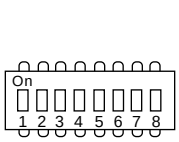

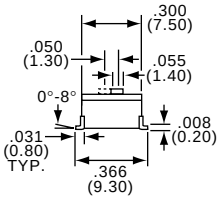

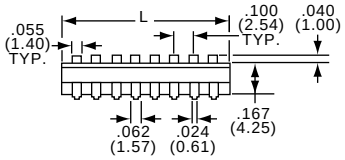

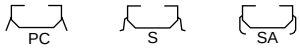

"S" Termination Shown

Extended Actuator

PC Term.	"S" Term.	"SA" Term.	No. of Positions	Actuator Style
ADE02	ADE02S	ADE02SA	2	Slide
ADE03	ADE03S	ADE03SA	3	Slide
ADE04	ADE04S	ADE04SA	4	Slide
ADE05	ADE05S	ADE05SA	5	Slide
ADE06	ADE06S	ADE06SA	6	Slide
ADE07	ADE07S	ADE07SA	7	Slide
ADE08	ADE08S	ADE08SA	8	Slide
ADE09	ADE09S	ADE09SA	9	Slide
ADE10	ADE10S	ADE10SA	10	Slide
ADE12	ADE12S	ADE12SA	12	Slide

See Page 6004 for PC Pad Layout and "L" dimensions.

ADF



ADF08S

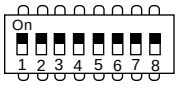

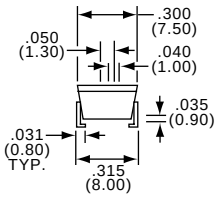

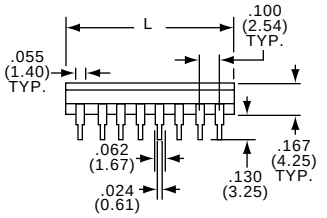

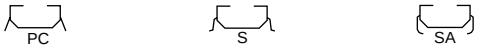

"SA" Termination Shown

Flush Actuator

Tape seal version for vacuum pick and place.

See Page 6004 for PC Pad Layout and "L" Dimensions.

PC Term	"PC" Term. w/Tape.	"S" Term.	"S" Term. w/Tape Seal	Tape & Reel	"SA" Term.	"SA" Term. w/Tape Seal	No. of Positions	Actuator Style
ADF02	ADF02T	ADF02S	ADF02ST	ADF02STTR	ADF02SA	ADF02SAT	2	Slide
ADF03	ADF03T	ADF03S	ADF03ST	ADF03STTR	ADF03SA	ADF03SAT	3	Slide
ADF04	ADF04T	ADF04S	ADF04ST	ADF04STTR	ADF04SA	ADF04SAT	4	Slide
ADF05	ADF05T	ADF05S	ADF05ST	ADF05STTR	ADF05SA	ADF05SAT	5	Slide
ADF06	ADF06T	ADF06S	ADF06ST	ADF06STTR	ADF06SA	ADF06SAT	6	Slide
ADF07	ADF07T	ADF07S	ADF07ST	ADF07STTR	ADF07SA	ADF07SAT	7	Slide
ADF08	ADF08T	ADF08S	ADF08ST	ADF08STTR	ADF08SA	ADF08SAT	8	Slide
ADF09	ADF09T	ADF09S	ADF09ST	ADF09STTR	ADF09SA	ADF09SAT	9	Slide
ADF10	ADF10T	ADF10S	ADF10ST	ADF10STTR	ADF10SA	ADF10SAT	10	Slide
ADF12	ADF12T	ADF12S	ADF12ST	ADF12STTR	ADF12SA	ADF12SAT	12	Slide

For complete product information, order Catalog 1308390

Products for Industrial & Commercial Applications

Dimensions are shown for reference purposes only.

Dimensions are in inches and millimeters unless otherwise specified. Values in brackets are metric equivalents.

Specifications subject to change.

Technical Support Center
1-800-522-6752
www.tycoelectronics.com

DIP Switches, Piano Actuator, Auto Insertable, and Through Hole, and Surface Mount

ADP



ADP04S

Piano Actuator

"PC" Termination Shown

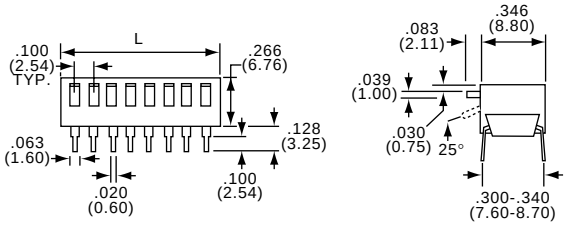

Poles	Bodylength "L"		Poles	Bodylength "L"	
2	0.278"	(7.06mm)	7	0.778"	(19.76mm)
3	0.378"	(9.60mm)	8	0.878"	(22.30mm)
4	0.478"	(12.14mm)	9	0.978"	(24.84mm)
5	0.578"	(14.68mm)	10	1.078"	(27.38mm)
6	0.678"	(17.22mm)	12	1.250"	(32.51mm)

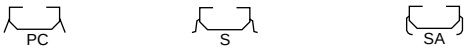

Lever Down "On"	Lever Up "On"	Lever Down "On"	Lever Up "On"	Lever Down "On"	Lever Up "On"	No. of Positions	Actuator Style
ADP02	ADPA02	ADP02S	ADPA02S	ADP02SA	ADPA02SA	2	Piano
ADP04	ADPA04	ADP04S	ADPA04S	ADP04SA	ADPA04SA	4	Piano
ADP05	ADPA05	ADP05S	ADPA05S	ADP05SA	ADPA05SA	5	Piano
ADP06	ADPA06	ADP06S	ADPA06S	ADP06SA	ADPA06SA	6	Piano
ADP07	ADPA07	ADP07S	ADPA07S	ADP07SA	ADPA07SA	7	Piano
ADP08	ADPA08	ADP08S	ADPA08S	ADP08SA	ADPA08SA	8	Piano
ADP09	ADPA09	ADP09S	ADPA09S	ADP09SA	ADPA09SA	9	Piano
ADP10	ADPA10	ADP10S	ADPA10S	ADP10SA	ADPA10SA	10	Piano

TERMINATION OPTIONS

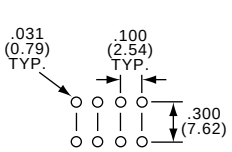

PC Termination

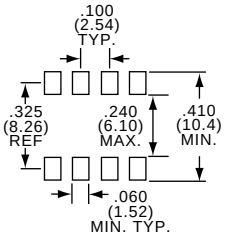

S Termination

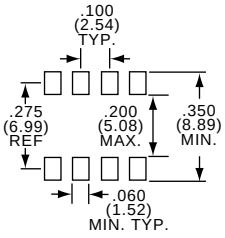

SA Termination

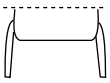

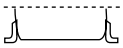

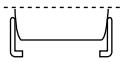

For complete product information, order Catalog 1308390

Products for Industrial & Commercial Applications

Dimensions are shown for reference purposes only.

Dimensions are in inches and millimeters unless otherwise specified. Values in brackets are metric equivalents.

Specifications subject to change.

Technical Support Center
1-800-522-6752
www.tycoelectronics.com

Rotary DIP Switches, Low Profile, Process Sealed, 7MM, Through Hole and Surface Mount

FEATURES:

- 40% PCB area space savings
- 50% Lower in profile
- Hexadecimal or binary code, complement available
- Deflection temperature of 250ºC for SMT reflow soldering
- Gold contacts, tin/lead terminals
- Sealed “O” ring design

MATERIAL SPECIFICATIONS:

Fixed Contacts/Terminals.....Brass, gold plated / tin/lead
Moving Contacts.....BeCu, gold plated
Case Material .....PPS UL94V-0
Rotor .....Nylon UL94V-O
Cover Material .....PPS UL94V-0
O-Ring .....Fluoro Rubber

ENVIRONMENTAL SPECIFICATIONS:

Operating Temperature.....-10°C to +85°C
Storage Temperature.....-45°C to +100°C
Solder Heat Resistance.....MIL-STD 202F, Method 210
IR Process Capability .....EIA-364-56 Level II (250°C peak)

TYPICAL PERFORMANCE CHARACTERISTICS:

Contact Rating .....0.4 VA Max. @ 20 VDC
Initial Contact Resistance.....50m Max. @ 2 VDC 10mA
Insulation Resistance .....1,000 Megohms max.
Dielectric Strength .....300 VAC for 1 minute
Actuator Travel.....36° 10 Position, 22.5° 16 position
Operating Force .....200 Grams avg.
Life Expectancy .....20,000 Steps, mechanical



MRD10



MRD10S



MRD16C



MRD16S

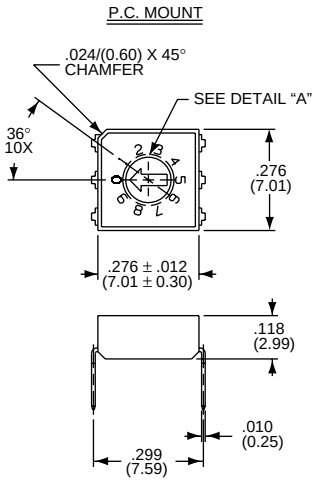

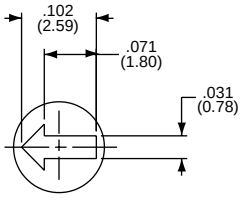

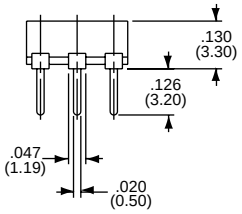

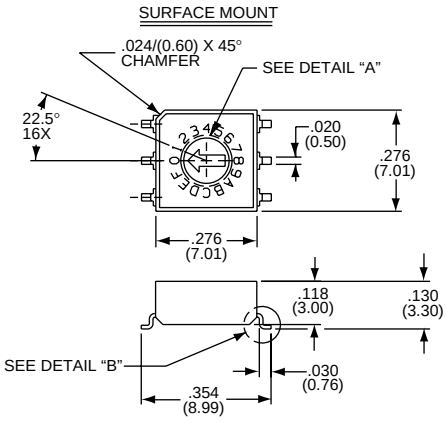

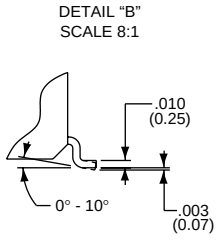

For complete product information, order Catalog 1308390

Products for Industrial & Commercial Applications

Dimensions are shown for reference purposes only.

Dimensions are in inches and millimeters unless otherwise specified. Values in brackets are metric equivalents.

Specifications subject to change.

Technical Support Center
1-800-522-6752
www.tycoelectronics.com

Rotary DIP Switches, Low Profile, Process Sealed, 7MM, Through Hole and Surface Mount

TERMINAL IDENTIFICATION

VIEWED FROM BOTTOM SWITCH

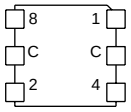

P.C. LAYOUT (THRU HOLE)

TOP VIEW

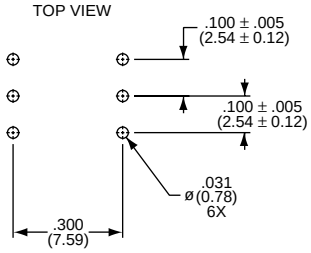

P.C. LAYOUT (SURFACE MOUNT)

TOP VIEW

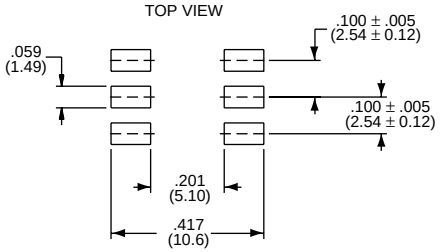

TRUTH TABLES

10-Position, BCD (red actuator)

Pos.	0	1	2	3	4	5	6	7	8	9
C	X	X	X	X	X	X	X	X	X	X
1		X		X		X		X		X
2			X	X			X	X		
4					X	X	X	X		
8									X	X

16-Position, Hexadecimal (green actuator)

Pos.	0	1	2	3	4	5	6	7	8	9	A	B	C	D	E	F
C	X	X	X	X	X	X	X	X	X	X	X	X	X	X	X	X
1		X		X		X		X		X		X		X		X
2			X	X			X	X			X	X			X	X
4					X	X	X	X					X	X	X	X
8									X	X	X	X	X	X	X	X

10-Position, BCD Complement (orange actuator)

Pos.	0	1	2	3	4	5	6	7	8	9
C	X	X	X	X	X	X	X	X	X	X
1	X		X		X		X		X	
2	X	X			X	X			X	X
4	X	X	X	X					X	X
8	X	X	X	X	X	X	X	X		

16-Position Hexadecimal Complement (white actuator)

Pos.	0	1	2	3	4	5	6	7	8	9	A	B	C	D	E	F
$\overline{C}$	X	X	X	X	X	X	X	X	X	X	X	X	X	X	X	X
$\overline{1}$	X		X		X		X		X		X		X		X	
$\overline{2}$	X	X			X	X			X	X			X	X		
$\overline{4}$	X	X	X	X					X	X	X	X				
$\overline{8}$	X	X	X	X	X	X	X	X								

HOW TO ORDER

MRD [ ] [ ] [ ]

Circuit Types
10 - BC decimal
10C = BCD complement
16 = Hexadecimal
16C = Hexadecimal complement

Terminations
Blank = PC
S = Outside L. surface mount

Packaging
TR = Tape & reel
(surface mount only)

Color Code	
Circuit Type	Actuator Color
10	Red
10C	Orange
16	Green
16C	White

For complete product information, order Catalog 1308390

Products for Industrial & Commercial Applications

Dimensions are shown for reference purposes only.

Dimensions are in inches and millimeters unless otherwise specified. Values in brackets are metric equivalents.

Specifications subject to change.

Technical Support Center
1-800-522-6752
www.tycoelectronics.com

Rotary Dip Switches, Process Sealed, Through Hole and Surface Mount

The Alcoswitch "E" version of the DR series rotary Dip switch is a process sealed switch. With an actuator "O" ring seal, this switch withstands the stringent 60°C, one minute immersion "Bubble" Test. Compliance with the "Bubble" test indicated the compatibility of DRD "E" Series with the harshness of soldering and cleaning processes.

MATERIAL SPECIFICATIONS:

Contacts .....Gold flashed copper alloy
Terminals .....Tin lead plated brass
Base, Rotor, Case .....PC, Glass filled PBT resin (blue case)
SMT, Polymide (white case)
Movable Contact.....Gold flashed copper alloy
Ball Support Plate.....Copper alloy
Detent Spring .....Stainless steel (spring)

ENVIRONMENTAL SPECIFICATIONS:

Operating Temperature.....-22ºF to +185ºF (-30°C to +85°C)
Storage Temperature.....-49ºF to 212ºF (-45°C to +100°C)
Vibration Resistance.....Subjected to vibration of 10-55hz per second with a total amplitude of .06 in. in 3 mutually perpendicular directions for 2 hours each
Shock Resistance .....Will withstand 50G acceleration in 3 different planes for a period of 11 milliseconds
Salt Spray Test .....Withstands an atmosphere of 5% salt water at temperature of 50°C
Hydrogen Sulfide Test .....Withstands an atmosphere of 15-20 PPM hydrogen sulfide gas at temperature of 40°C for 240 hours
Atmospheric Test .....Withstands an atmosphere of 30-50 PPM sulfite gas at a temperature of 40°C for 240 hours
Solder Heat Resistance.....Withstands 5 sec. flow solder bath of 260°C when mounted on a .06" thick PC board per MIL-STD 202, Method 210
Bubble Test.....Withstands submersion in 60°C Flouriert for 1 min. without leakage

TYPICAL PERFORMANCE CHARACTERISTICS:

Contact Rating .....0.4 VA @ 20 VDC max.
Initial Contact Resistance.....50 Milliohms max. @ 2 VDC
Insulation Resistance .....1,000 Megohms min. @100 VDC
Dielectric Strength .....300 VAC RMS @ sea level
Operating Force .....6 Oz.-in. nom.
SMT Operating Force.....3 Oz.-in. nom.
Life Expectancy .....20,000 Steps



DRD10E



DRD16CE

TRUTH TABLES

Terminal Identification
(view from bottom of the switch)

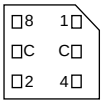

VIEW FROM BOTTOM OF THE SWITCH

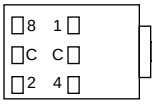

ACTUATOR LOCATION

NOTE: COMMON TERMINALS ARE CONNECTED INTERNALLY.

10-Position, BCD (red actuator)

Pos.	0	1	2	3	4	5	6	7	8	9
C	X	X	X	X	X	X	X	X	X	X
1		X		X		X		X		X
2			X	X			X	X		
4					X	X	X	X		
8									X	X

16-Position, Hexadecimal (black actuator)

Pos.	0	1	2	3	4	5	6	7	8	9	A	B	C	D	E	F
C	X	X	X	X	X	X	X	X	X	X	X	X	X	X	X	X
1		X		X		X		X		X		X		X		X
2			X	X			X	X			X	X			X	X
4					X	X	X	X					X	X	X	X
8									X	X	X	X	X	X	X	X

10-Position, BCD Complement (orange actuator)

Pos.	0	1	2	3	4	5	6	7	8	9
$\overline{C}$	X	X	X	X	X	X	X	X	X	X
$\overline{1}$	X		X		X		X		X	
$\overline{2}$	X	X			X	X			X	X
$\overline{4}$	X	X	X	X					X	X
$\overline{8}$	X	X	X	X	X	X	X	X		

16-Position Hexadecimal Complement (white actuator)

Pos.	0	1	2	3	4	5	6	7	8	9	A	B	C	D	E	F
$\overline{C}$	X	X	X	X	X	X	X	X	X	X	X	X	X	X	X	X
$\overline{1}$	X		X		X		X		X		X		X		X	
$\overline{2}$	X	X			X	X			X	X			X	X		
$\overline{4}$	X	X	X	X					X	X	X	X				
$\overline{8}$	X	X	X	X	X	X	X	X								

For complete product information, order Catalog 1308390

Products for Industrial & Commercial Applications

Dimensions are shown for reference purposes only.

Dimensions are in inches and millimeters unless otherwise specified. Values in brackets are metric equivalents.

Specifications subject to change.

Technical Support Center
1-800-522-6752
www.tycoelectronics.com

Rotary DIP Switches, Process Sealed, Through Hole and Surface Mount

"D" FLUSH ACTUATOR

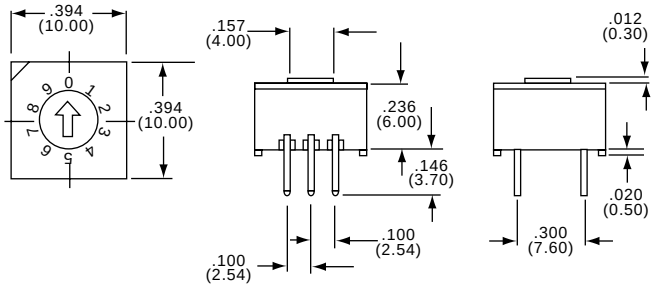

TERMINATIONS

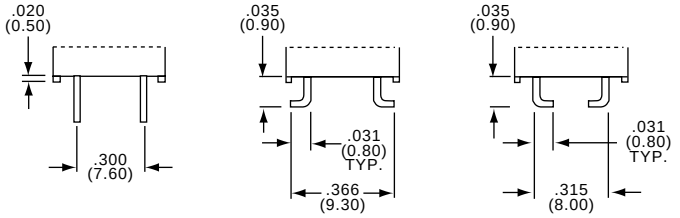

LAYOUTS

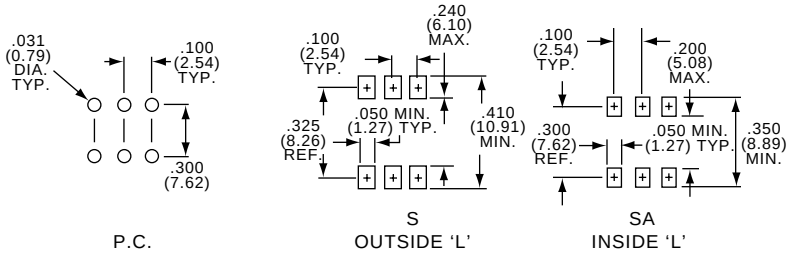

HOW TO ORDER

Actuator	Circuit	Termination	Seal	Packaging Options
DRD			**E**	
Flush				

Blank = Tubes
TR = Tape & Reel (for surface mount only)

10 = BCD
10C = BCD Complement
16 = Hexadecimal
16C = Hexadecimal Complement

Blank = PC
S = SMT (Inside L)
SA = SMT (Outside L)

For complete product information, order Catalog 1308390

Products for Industrial & Commercial Applications

Dimensions are shown for reference purposes only.

Dimensions are in inches and millimeters unless otherwise specified. Values in brackets are metric equivalents.

Specifications subject to change.

Technical Support Center
1-800-522-6752
www.tycoelectronics.com

Slide Switches, Auto-insertable, Through Hole and Surface Mount

FEATURES:

- Unique design allows ASE/F to withstand aqueous or solvent cleaning processes.
- High temperature anti-static plastic construction will withstand most surface mount, vapor phase reflow or wave soldering conditions.
- Three standard types:
  ASF – DIP package with flush actuator allows auto insertion on standard IC equipment. Standard tape seal and closed case construction provide process seal.
  ASFO–Open extended flush actuator without tape seal.
  ASE–extended actuator open-ended case allows washout after process cleaning.
- 2, 4 and 6 pole versions available with top or side actuator.
- Bifurcated double wipe contacts provide dependable, telecom grade switching.
- Industry standard .100 x .300 pin spacing

MATERIAL SPECIFICATIONS:

Contacts .....Gold: .000030" over .000100" nickel
Silver: .000050" over nickel flash
Case Material .....Polyester
Actuator Material .....Polyester
Terminal/Fixed Contacts .....Copper alloy

ENVIRONMENTAL SPECIFICATIONS:

Operating Temperature.....-40°C to +80°C (-40°F to +176°F)
Storage Temperature.....-40˚C to +80˚C (-40°F to +176°F)

TYPICAL PERFORMANCE CHARACTERISTICS:

Contact Rating .....Gold: 0.4 VA @ 20 VDC max. shorting type
Silver: 300mA @ 115 VAC 28 VDC
Insulation Resistance .....1,000 Megohms @ 500 VDC min.
Dielectric Strength .....1,000 Volts RMS @ sea level
Contact Timing.....Shorting
Life Expectancy .....10,000 Cycles

PART NUMBERING

Series	Actuator Style	Poles	Throws	Options		SMT
AS	E F FO	2 4 6	2 *3	R **	G Blank = Silver	L S

ASF: Tape seal, closed (sealed) case, flush top actuator.

ASE: Open ended case, extended top or side actuator.

ASFO: Open ended case, flush top or side actuator.



ASE22R



ASE62G



ASF22



ASF22R

Silver plated contacts/terminals on all models.
Standard actuator color is white.
E= Extended actuator
F= Flush actuator
FO= Open ended without tape seal
G= Gold contacts
R= Side actuator
*3= Throw available in 4 pole only
L= SMT terminal configuration
S= SMT terminal reverse L configuration (Refer to page 6011 for pad layout)

**Flush side actuator "R" versions are supplied with open ended case and without tape seal.

Note: For SPDT requirements, order DPDT version and use either set of contacts for SPDT switching.

For complete product information, order Catalog 1308390

Products for Industrial & Commercial Applications

Dimensions are shown for reference purposes only.

Dimensions are in inches and millimeters unless otherwise specified. Values in brackets are metric equivalents.

Specifications subject to change.

Technical Support Center
1-800-522-6752
www.tycoelectronics.com

Slide Switches, Auto-insertable, Through Hole and Surface Mount

ASE/F SERIES DIMENSIONS

FLUSH SIDE ACTUATOR

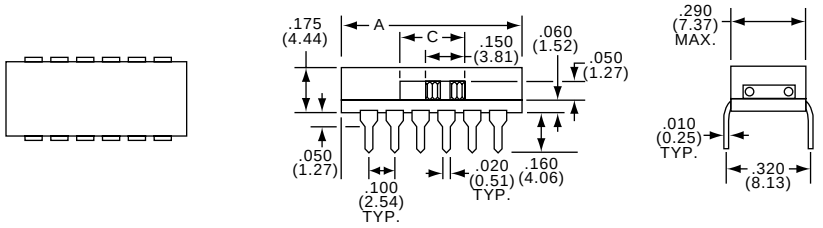

FLUSH TOP ACTUATOR

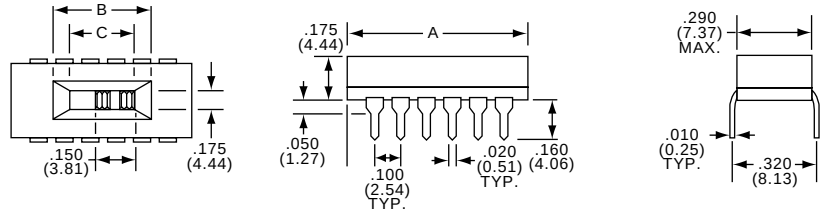

EXTENDED SIDE ACTUATOR

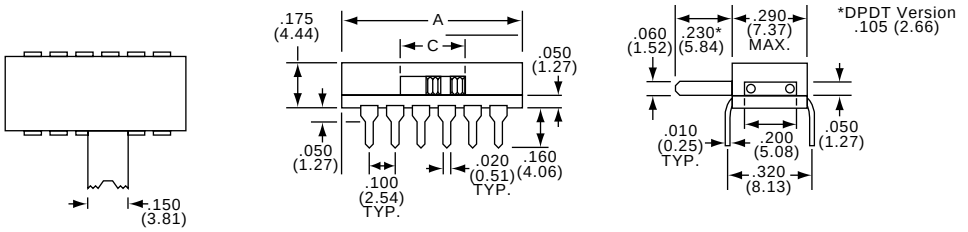

EXTENDED TOP ACTUATOR

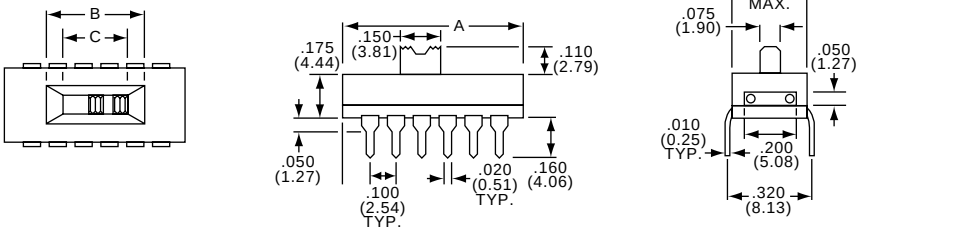

CIRCUIT DIAGRAMS

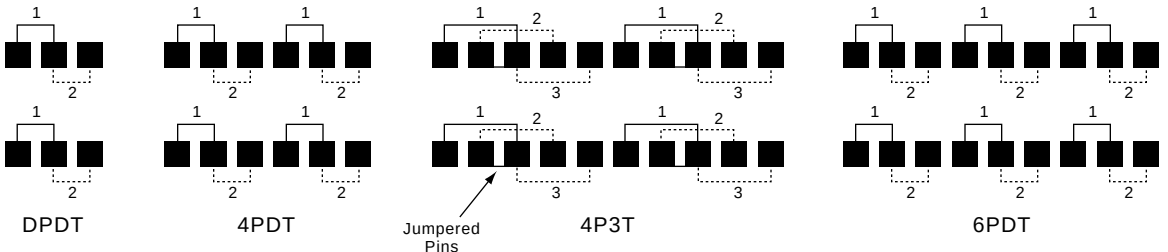

DIMENSION CHART

Configuration	Body Length Dimension "A"	Bevel Length Dimension "B"	Slot Length Dimension "C"
DPDT	.400/10.2mm	.370/9.4mm	.260/6.6mm
4PDT	.700/17.8mm	.370/9.4mm	.260/6.6mm
4P3T	1.10/27.9mm	.470/11.9mm	.360/9.1mm
6PDT	1.00/25.4mm	.370/9.4mm	.260/6.6mm

NOTE: For SPDT requirements order DPDT version and use either set of contacts for SPDT switching.

For complete product information, order Catalog 1308390

Products for Industrial & Commercial Applications

Dimensions are shown for reference purposes only.

Dimensions are in inches and millimeters unless otherwise specified. Values in brackets are metric equivalents.

Specifications subject to change.

Technical Support Center
1-800-522-6752
www.tycoelectronics.com

"L" PAD

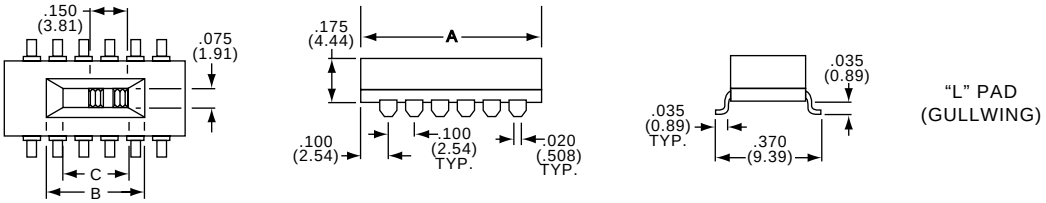

"L" PAD
(GULLWING)

REVERSE "S" PAD

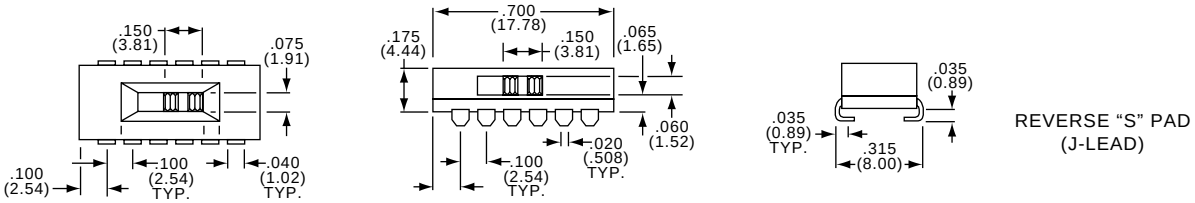

REVERSE "S" PAD
(J-LEAD)

ACTUATOR DETAILS

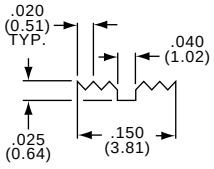

PAD LAYOUT

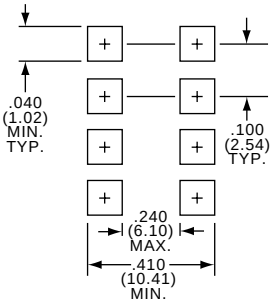

"L" PAD

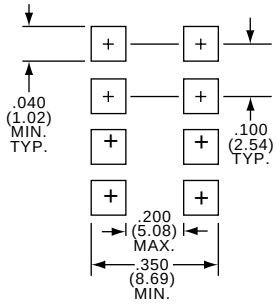

REVERSE "S" PAD

6 Switches

Products for Industrial & Commercial Applications

Dimensions are shown for reference purposes only.

Dimensions are in inches and millimeters unless otherwise specified. Values in brackets are metric equivalents.

Specifications subject to change.

Technical Support Center
1-800-522-6752
www.tycoelectronics.com

Slide Switches, Auto-insertable, Through Hole and Surface Mount

MATERIAL SPECIFICATIONS:

Contacts .....Gold over nickel over copper alloy
Silver over nickel flash over copper alloy
Case Material/Base .....Polyester
Actuator Material.....Polyester
Movable Contact .....Beryllium copper
Terminal/Fixed Contacts .....Copper alloy, terminals tin lead plate (90/10)
Terminal Seal.....Insert molded
Process Seal .....Tape seal on ASF upright version

ENVIRONMENTAL SPECIFICATIONS:

Operating Temperature .....-40°C to +80°C (-40°F to +176°F)
Storage Temperature .....-40°C to +80°C (-40°F to +176°F)
Solder Heat Resistance .....Withstands vapor phase, reflow and wave soldering processes

TYPICAL PERFORMANCE CHARACTERISTICS:

Contact Rating .....Gold: 0.4 VA @ 20 VDC max.
Silver: 300 milliamps @ 115 VAC max.
28 VDC
Initial Contact Resistance.....40 Milliohms max.
Contact Timing.....Shorting
Insulation Resistance .....1,000 Megohms @ 500 VDC min.
Dielectric Strength .....1,000 Volts RMS @ sea level
Actuation Force .....950 Grams max.
Life Expectancy .....10,000 Cycles

NOTE: Refer to page 6009 for additional options and dimensions.

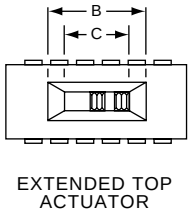

EXTENDED TOP ACTUATOR

See page 6021

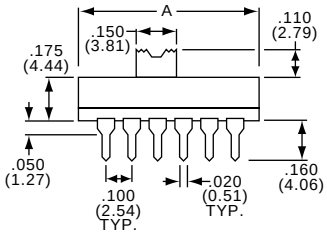

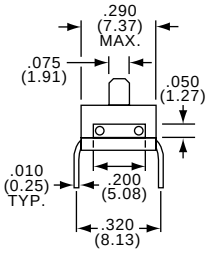

Model	Type	Contact	Mounting Style
ASE22	DPDT	Silver	Upright
ASE22G	DPDT	Gold	Upright
ASE42	4PDT	Silver	Upright
ASE42G	4PDT	Gold	Upright
ASE43	4P3T	Silver	Upright
ASE43G	4P3T	Gold	Upright
ASE62	6PDT	Silver	Upright
ASE62G	6PDT	Gold	Upright

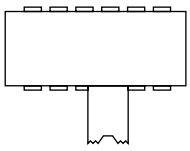

EXTENDED SIDE ACTUATOR

See page 6021

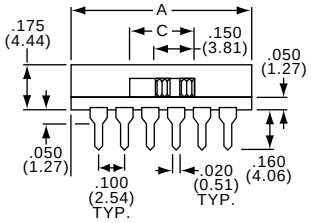

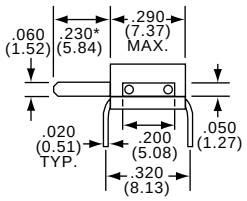

*.105 (2.67) ASE22R, ASE22RG

Model	Type	Contact	Mounting Style
ASE22R	DPDT	Silver	Right Angle
ASE22RG	DPDT	Gold	Right Angle
ASE42R	4PDT	Silver	Right Angle
ASE42RG	4PDT	Gold	Right Angle
ASE43R	4P3T	Silver	Right Angle
ASE43RG	4P3T	Gold	Right Angle
ASE62R	6PDT	Silver	Right Angle
ASE62RG	6PDT	Gold	Right Angle

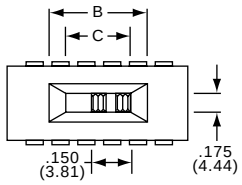

TAPED FLUSH TOP ACTUATOR ASF

See page 6021

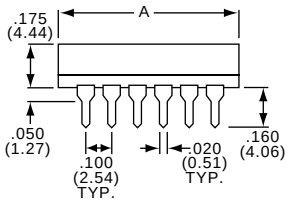

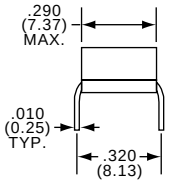

*ASF: TAPE SEAL, CLOSED (SEALED) CASE
*ASFO: NO TAPE SEAL, OPEN ENDED CASE

Model	Type	Contact	Slide Type	Mounting Style
ASF(*)22	DPDT	Silver	Flush	Upright
ASF(*)22G	DPDT	Gold	Flush	Upright
ASF(*)42	4PDT	Silver	Flush	Upright
ASF(*)42G	4PDT	Gold	Flush	Upright
ASF(*)43	4P3T	Silver	Flush	Upright
ASF(*)43G	4P3T	Gold	Flush	Upright
ASF(*)62	6PDT	Silver	Flush	Upright
ASF(*)62G	6PDT	Gold	Flush	Upright

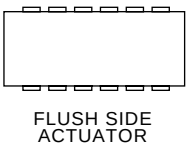

FLUSH SIDE ACTUATOR

See page 6021

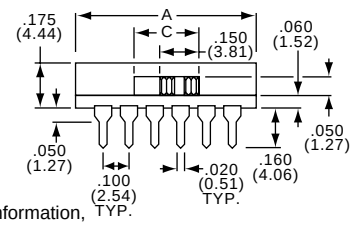

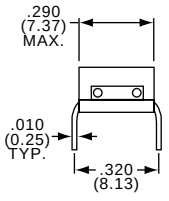

NO TAPE SEAL, OPEN ENDED CASE

Model	Type	Contact	Slide Type	Mounting Style
ASF22R	DPDT	Silver	Flush	Right Angle
ASF22RG	DPDT	Gold	Flush	Right Angle
ASF42R	4PDT	Silver	Flush	Right Angle
ASF42RG	4PDT	Gold	Flush	Right Angle
ASF43R	4P3T	Silver	Flush	Right Angle
ASF43RG	4P3T	Gold	Flush	Right Angle
ASF62R	6PDT	Silver	Flush	Right Angle
ASF62RG	6PDT	Gold	Flush	Right Angle

For complete product information, order Catalog 1308390

Slide Switches, Process Sealed, Space Saver, Retention Feature

MATERIAL SPECIFICATIONS:

Contacts .....Copper alloy, Gold plate
Case Material .....Polyester (UL94 V-O)
Frame Material .....Copper alloy nickel plate
Terminal Seal .....Epoxy
Process Seal .....Silicone rubber boot
Terminals .....Tin lead

ENVIRONMENTAL SPECIFICATIONS:

Operating Temperature.....-4˚F to + 176˚F (-20˚C to + 80˚C)
Storage Temperature.....-40˚F to + 176˚F (-40˚C to + 80˚Cº)
Solder Heat Resistance.....Ref. MIL-STD-202, Method 210

TYPICAL PERFORMANCE CHARACTERISTICS:

Contact Rating .....Gold: 0.4 VA @ 20 VDC
Initial Contact Resistance.....50 Milliohms max.
Contact Timing.....Break before make
Insulation Resistance .....500 Megohms @ 250 VDC
Dielectric Strength .....500 VAC for 1 min.
Actuation Force .....100 to 500 Grams
Actuator Travel.....087
Life Expectancy .....10,000 Cycles

SPDT



SE1DGPC

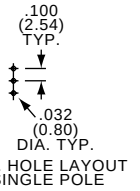

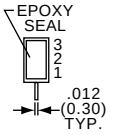

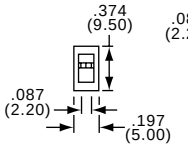

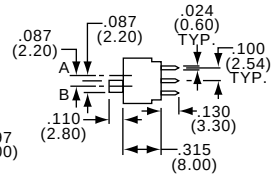

DPDX

Extra compact double pole saves PCB real estate.



SE2DGPC

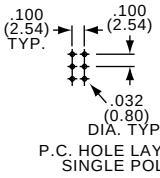

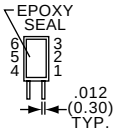

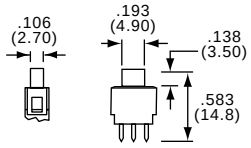

Model	Type				Model	Type			
SE1DGPC	SPDT	On	None	On	SE2DGPC	DPDT	On	None	On
SE1EGPC	SPDT	On	Off	On	SE2EGPC	DPDT	On	Off	On
Terminals Connected		1-2		2-3	Terminals Connected		1-2, 4-5		2-3, 5-6

SPDT



SE1DGRA

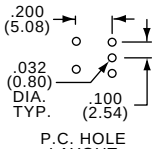

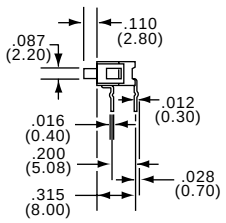

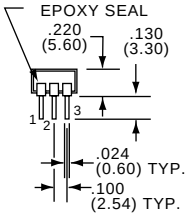

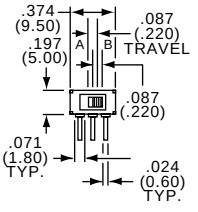

DPDT

Extra compact double pole saves PCB real estate.



SE2DGRA

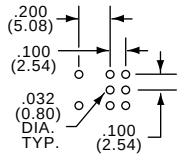

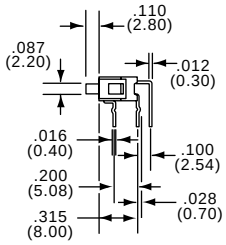

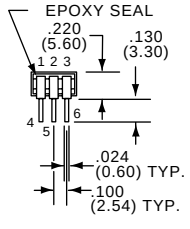

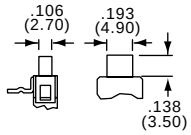

Model	Type				Model	Type			
SE1DGRA	SPDT	On	None	On	SE2DGRA	DPDT	On	None	On
SE1EGRA	SPDT	On	Off	On	SE2EGRA	DPDT	On	Off	On
Terminals Connected		1-2		2-3	Terminals Connected		1-2, 4-5		2-3, 5-6

For complete product information, order Catalog 1308390

Slide Switches, Miniature, Low Profile, Economy Grade

MATERIAL SPECIFICATIONS:

Contacts .....Silver clad copper alloy
Case Material .....Steel zinc plated
Actuator Material .....Polyester (UL 94HB)
Terminal Seal .....Epoxy
Terminals/Fixed Contacts .....Silver plate copper alloy

ENVIRONMENTAL SPECIFICATIONS:

Operating Temperature..... -5°F to 140°F (-15°C to +60°C)
Storage Temperature.....-4°F to +158°F (-20°C to +70°C)
Solder Heat Resistance.....MIL-STD-202, Method 210

TYPICAL PERFORMANCE CHARACTERISTICS:

Contact Rating .....300 mA @ 125 VAC
Initial Contact Resistance.....20 Milliohms max.
Contact Timing.....Make-before-break
Insulation Resistance .....100 Megohms min. @ 500 VDC
Dielectric Strength .....500 VAC
Actuation Force .....250 Grams, +150 Grams, -100 Grams
Actuator Travel.....0.098”
Life Expectancy .....10,000 Cycles

NOTICE: Bifurcated contact produces double wiping, self-cleaning contacts.

SPDT



STS121PC

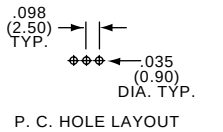

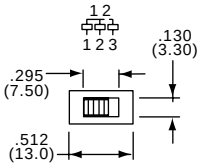

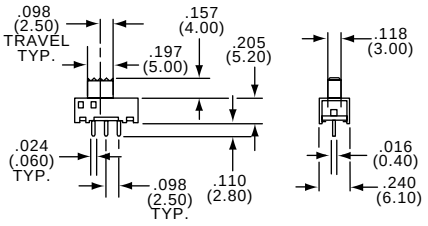

Model	Plating	Mounting Style
STS121PC	Silver	Upright

SPDT



STS`121RA

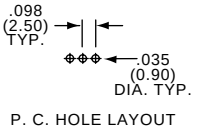

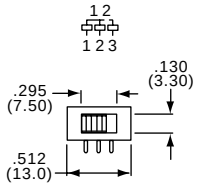

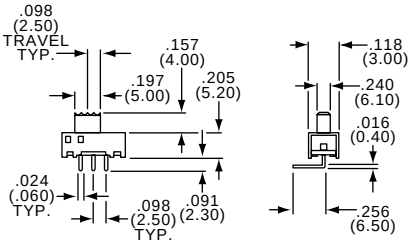

Model	Plating	Mounting Style
STS121RA	Silver	Right Angle

SP3T



STS131PC

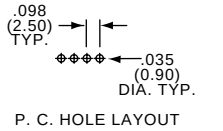

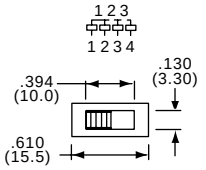

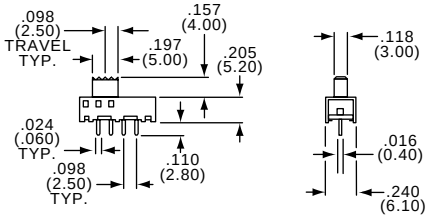

Model	Plating	Mounting Style
STS131PC	Silver	Upright

SP3T



STS131RA

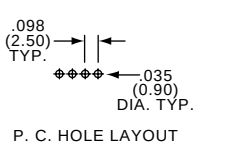

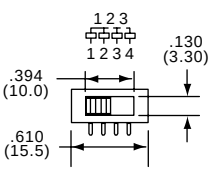

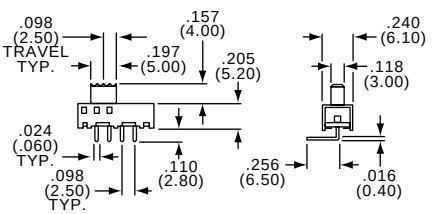

Model	Plating	Mounting Style
STS131RA	Silver	Right Angle

For complete product information, order Catalog 1308390

Products for Industrial & Commercial Applications

Dimensions are shown for reference purposes only.

Dimensions are in inches and millimeters unless otherwise specified. Values in brackets are metric equivalents.

Specifications subject to change.

Technical Support Center
1-800-522-6752
www.tycoelectronics.com

Slide Switches, Miniature, Low Profile, Economy Grade

SEE PAGE 6014 FOR PRODUCT SPECIFICATIONS

SP3T



STS1300PC

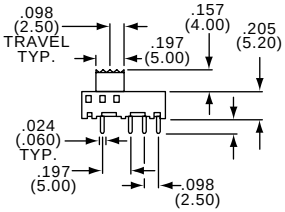

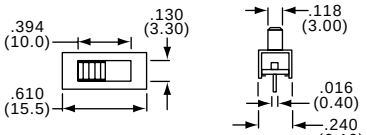

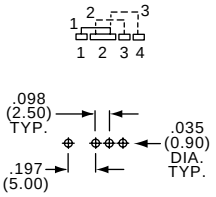

P. C. HOLE LAYOUT

SP3T



STS1300RA

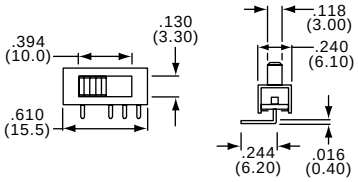

Model	Plating	Mounting Style
STS1300PC	Silver	Upright
STS1300RA	Silver	Right Angle

SP4T



STS1400PC

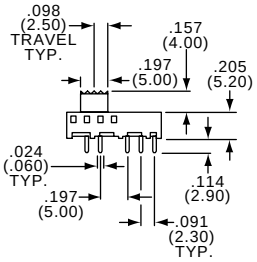

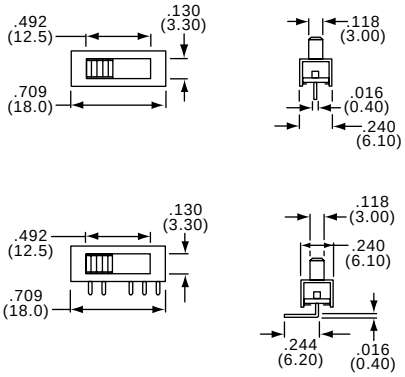

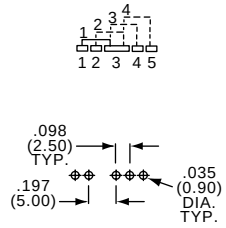

P. C. HOLE LAYOUT

Model	Plating	Mounting Style
STS1400PC	Silver	Upright
STS1400RA	Silver	Right Angle

SP4T



STS141RA

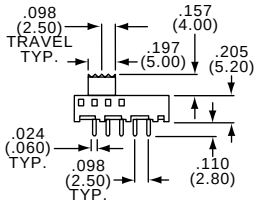

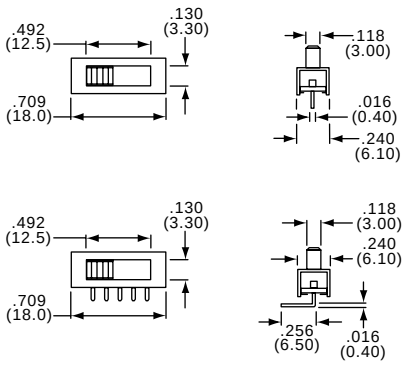

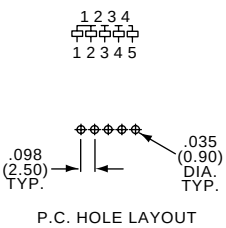

P.C. HOLE LAYOUT

Model	Plating	Mounting Style
STS141PC	Silver	Upright
STS141RA	Silver	Right Angle

For complete product information, order Catalog 1308390

Products for Industrial & Commercial Applications

Dimensions are shown for reference purposes only.

Dimensions are in inches and millimeters unless otherwise specified. Values in brackets are metric equivalents.

Specifications subject to change.

Technical Support Center
1-800-522-6752
www.tycoelectronics.com

Slide Switches, Miniature, Low Profile, Economy Grade

SEE PAGE 6014 FOR PRODUCT SPECIFICATIONS

SP5T



STS151PC



STS151RA

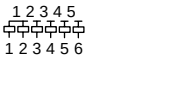

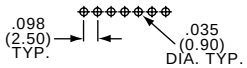

P.C. HOLE LAYOUT

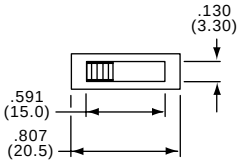

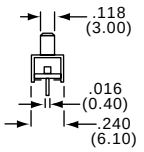

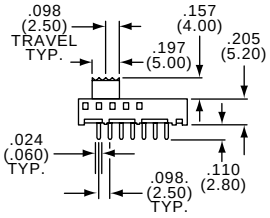

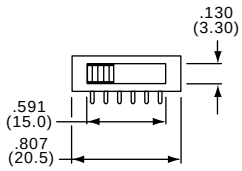

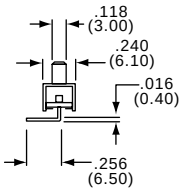

Model	Plating	Mounting Style
STS151PC	Silver	Upright
STS151RA	Silver	Right Angle

SP6T



STS161PC



STS161RA

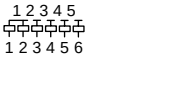

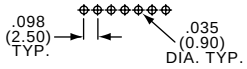

P.C. HOLE LAYOUT

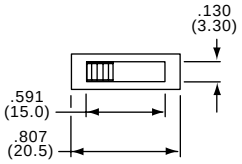

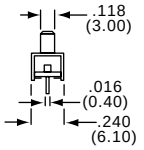

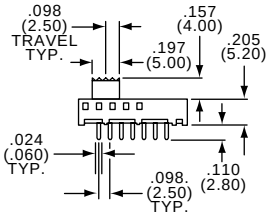

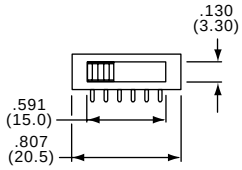

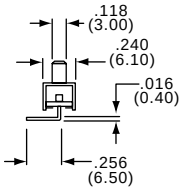

Model	Plating	Mounting Style
STS161PC	Silver	Upright
STS161RA	Silver	Right Angle

DP3T



STS2300PC

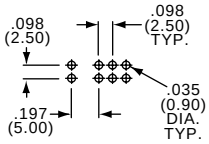

P. C. HOLE LAYOUT



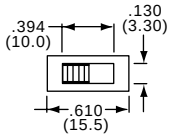

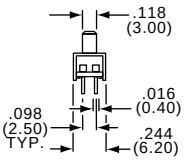

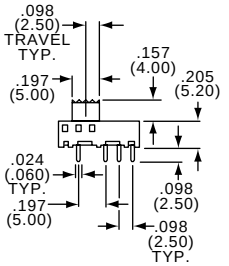

DP4T



STS2400PC

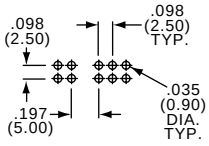

P. C. HOLE LAYOUT

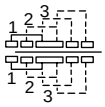

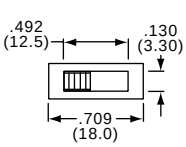

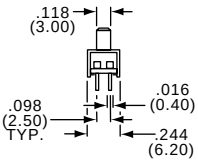

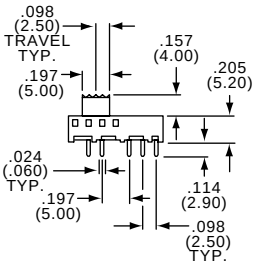

Model	Type	Plating	Mounting Style
STS2300PC	DP3T	Silver	Upright
STS2400PC	DP4T	Silver	Upright

Products for Industrial & Commercial Applications

Dimensions are shown for reference purposes only.

Dimensions are in inches and millimeters unless otherwise specified. Values in brackets are metric equivalents.

Specifications subject to change.

Technical Support Center
1-800-522-6752
www.tycoelectronics.com

Slide Switches, Miniature, Low Profile, Economy Grade

SEE PAGE 6014 FOR PRODUCT SPECIFICATIONS

DPDT

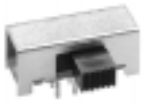

STSA220RA

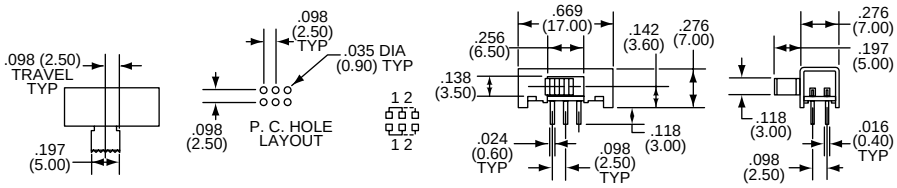

Model	Plating	Mounting Style
STSA220RA	Silver	Right Angle

DPDT



STSA220RA1

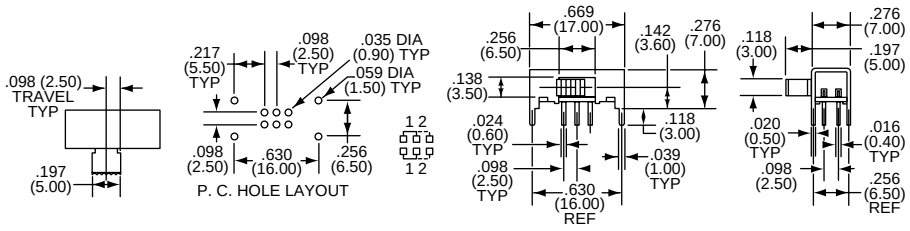

Model	Plating	Mounting Style
STSA220RA1	Silver	Right Angle

DP3T



STSA230RA

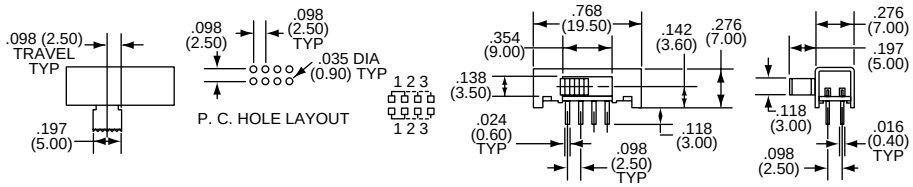

Model	Plating	Mounting Style
STSA230RA	Silver	Right Angle

DP3T



STSA230RA1

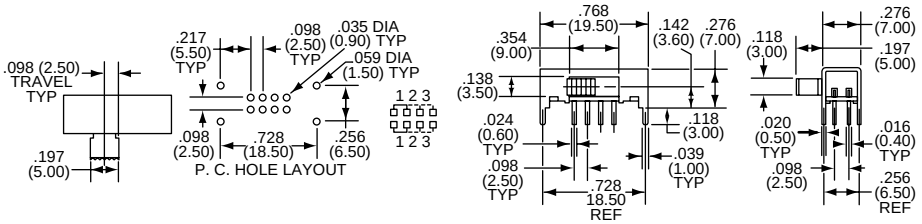

Model	Plating	Mounting Style
STSA230RA1	Silver	Right Angle

DP6T/DP5T/DP4T/ DP3T/DP2T



STS220PC

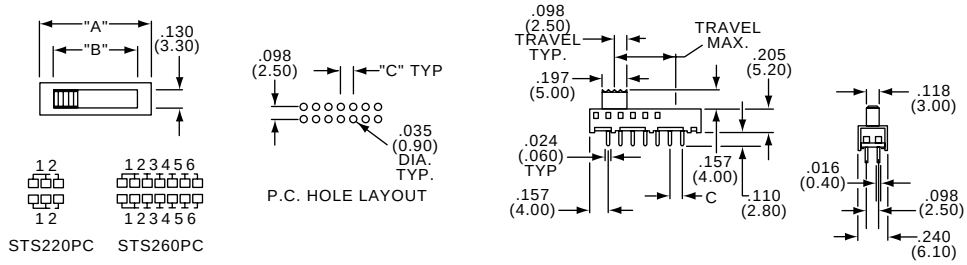

Model	Type	Dim.A	Dim.B	Dim.C	Travel Max.	Pin Holes
STS220PC	DP2T	.512(13.0)	.295(7.50)	.098(2.50)	.098(2.50)	6
STS230PC	DP3T	.610(15.5)	.394(10.0)	3 Places	.197(5.00)	8
STS240PC	DP4T	.709(18.0)	.492(12.5)	4 Places	.295(7.50)	10
STS250PC	DP5T	.807(20.5)	.591(15.0)	5 Places	.394(10.0)	12
STS260PC	DP6T	.906(23.0)	.689(17.5)	6 Places	.492(12.5)	14

Products for Industrial & Commercial Applications

Dimensions are shown for reference purposes only.

Dimensions are in inches and millimeters unless otherwise specified. Values in brackets are metric equivalents.

Specifications subject to change.

Technical Support Center
1-800-522-6752
www.tycoelectronics.com

Slide Switches, Vertical, Single or Dual Actuator

MATERIAL SPECIFICATIONS:

Contacts .....Copper w/gold plate over nickel
Case Material .....High temperature polyester (94-VO)
Actuator Material .....Polyester (94-VO)
Terminals .....Copper w/gold over nickel
Terminal Seal .....Epoxy standard: single pole, optional: double pole

ENVIRONMENTAL SPECIFICATIONS:

Operating Temperature .....-4°F to + 176°F (-20°C to + 80°C)
Storage Temperature .....-4°F to + 176°F (-20°C to + 80°C)

TYPICAL PERFORMANCE CHARACTERISTICS:

Contact Rating .....Gold: 0.4 VA max. @ 20 VDC or peak AC
Initial Contact Resistance .....20 Millohms max.
Contact Timing .....Non-shorting
Insulation Resistance .....1,000 Megohms min. @ 500 VDC
Dielectric Strength .....1,000 Volts RMS @ sea level
Plunger/Actuator Travel .....120"
Life Expectancy .....60,000-80,000 Cycles

SPST/SPDT



TSS11DGPC



TSS11DG1PC

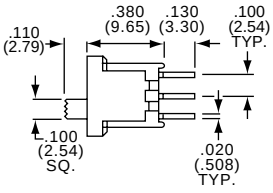

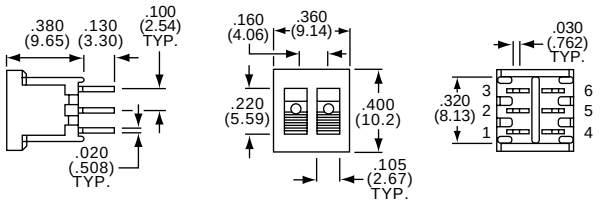

SPST/SPDT (DUAL)



TSD21AAGPC



TSD21DDG1PC

Extended Actuator Model	Type	Act. Code P. K9	■	■	■
TSS11AGPC	SPST	A	On	None	Off
TSS11DGPC	SPDT	D	On	None	On
TSS11EGPC	SPDT	E	On	Off	On
Flush Actuator					
TSS11AG1PC	SPST	A	On	None	Off
TSS11DG1PC	SPDT	D	On	None	On
TSS11EG1PC	SPDT	E	On	Off	On

Extended Dual Actuator Model	Type	Act. Code P. K9	■	■	■
TSD21AAGPC	2 x SPST	A	On	None	Off
TSD21DDGPC	2 x SPDT	D	On	None	On
Flush Dual Actuator					
TSD21DDG1PC	2 x SPDT	D	On	None	On

Note: No center terminals on "A" action switches.

DPST/DPDT



TSS21NGPC



TSS21PGPC

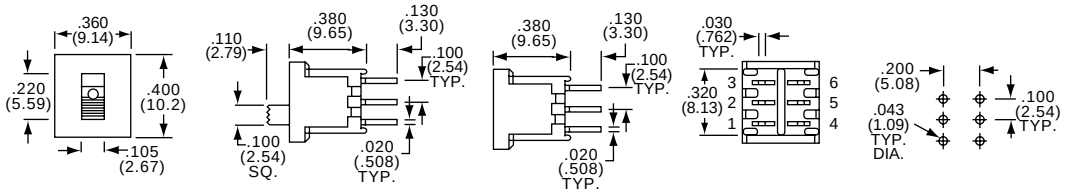

Extended Actuator Model	Type	Act. Code P. K9	■	■	■
TSS21KGPC	DPST	K	On	None	Off
TSS21NGPC	DPDT	N	On	None	On
TSS21PGPC	DPDT	P	On	Off	On

Flush Actuator Model	Type	Act. Code P. K9	■	■	■
TSS21KG1PC	DPST	K	On	None	Off
TSS21NG1PC	DPDT	N	On	None	On
TSD21RG1PC	DPDT	P	On	Off	On

Note: No center terminals on "K" action switches.

4PDT



TSS41NGPC

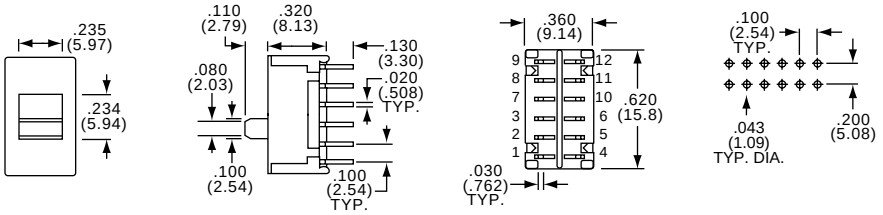

Extended Actuator Model	Type	Act. Code P. K9	■	■	■
TSS41NGPC	4PDT	N	On	None	On

For complete product information, order Catalog 1308390

Products for Industrial & Commercial Applications

Dimensions are shown for reference purposes only.

Dimensions are in inches and millimeters unless otherwise specified. Values in brackets are metric equivalents.

Specifications subject to change.

Technical Support Center
1-800-522-6752
www.tycoelectronics.com

Slide Switches, Right Angle, Single or Dual Actuator

SEE PAGE 6018 FOR PRODUCT SPECIFICATIONS

SPDT



TSS11DGRA



TSS11DG1RA

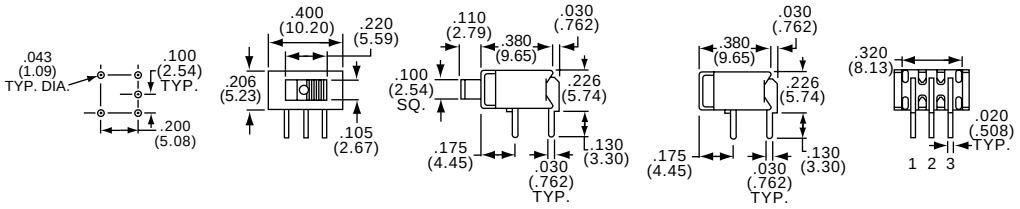

Extended Actuator Model	Type	Act. Code P. K9				Flush Actuator Model	Type	Act. Code P. K9			
TSS11DGRA	SPDT	D	On	None	On	TSS11DG1RA	SPDT	D	On	None	On
TSS11EGRA	SPDT	E	On	Off	On	TSS11EG1RA	SPDT	E	On	Off	On

SPDT (DUAL)



TSD21DDGRA



TSD21DDG1RA

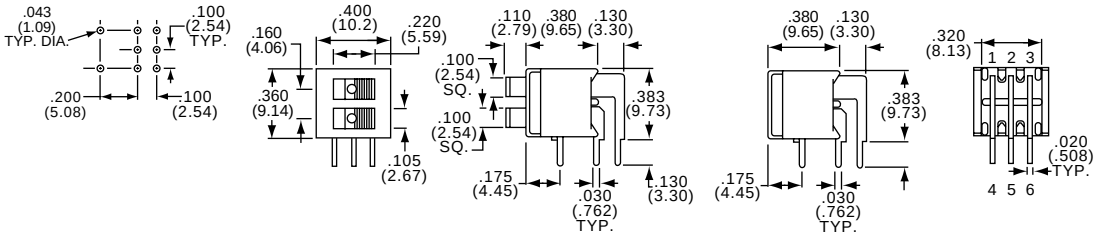

Extended Dual Actuator Model	Type	Act. Code P. K9				Flush Dual Actuator Model	Type	Act. Code P. K9			
TSD21DDGRA	2 x SPDT	D	On	None	On	TSD21DDG1RA	2 x SPDT	D	On	None	On
TSD21EEGRA	2 x SPDT	E	On	Off	On	TSD21EEG1RA	2 x SPDT	E	On	Off	On

DPDT



TSS21NGRA



TSS21PG1RA

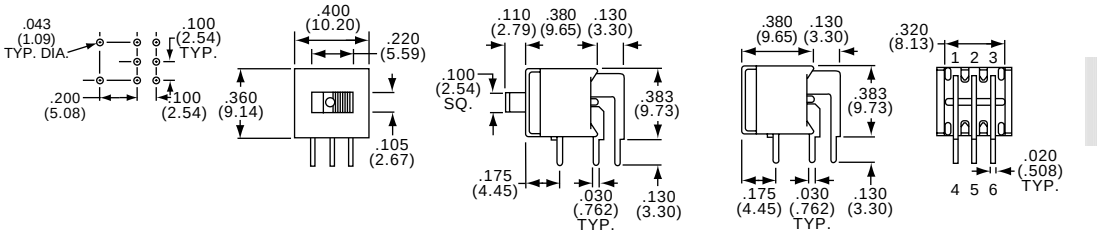

Extended Actuator Model	Type	Act. Code P. K9				Flush Actuator Model	Type	Act. Code P. K9			
TSS21PAGRA	SP3T	PA	On	On	On	TSS21NG1RA	DPDT	N	On	None	On
TSS21NGRA	DPDT	N	On	None	On	TSS21PG1RA	DPDT	P	On	Off	On
TSS21PGRA	DPDT	P	On	Off	On						

4PDT



TSS41NGRA

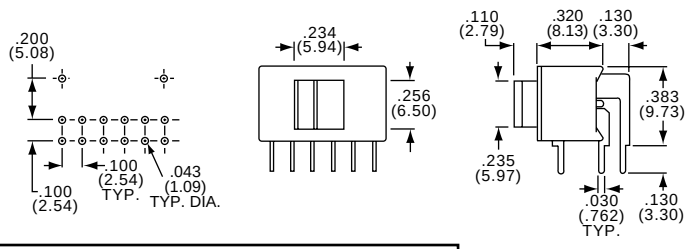

Extended Actuator Model	Type	Act. Code P. K9			
TSS41NGRA	4PDT	N	On	None	On

Slide Switches, Extended Baton Style Actuator, Low Profile, Instrumentation Grade

MATERIAL SPECIFICATIONS:

Contacts .....Gold or silver over copper alloy
Frame Material .....Steel
Actuator Material .....Polycarbonate (UL 94 V-2)
Terminals/Fixed Contacts.....Gold or silver plate
Terminal Seal .....Epoxy

ENVIRONMENTAL SPECIFICATIONS:

Operating Temperature.....-4°F to +212°F (-20°C to +100°C)
Storage Temperature.....-40°F to +212°F (-40°C to + 100°C)
Recommended Cleaning.....No chlorine base or Freon can be used. Aqueous or 100% ethanol.

TYPICAL PERFORMANCE CHARACTERISTICS:

Contact Rating .....Gold: 0.4 VA 20 VDC or peak AC
Silver: 300 mA @ 125 VAC
Initial Contact Resistance.....20 Milliohms max.
Contact Timing.....Make-before-break
Insulation Resistance .....1000 Megohms min.
Dielectric Strength .....500 Volts RMS @ sea level
Actuation Force .....250 Grams (+200g/-150g)
Actuator Travel.....0.079”
Life Expectancy .....15,000 Cycles

SPDT/SP3T

Standard



MHS122

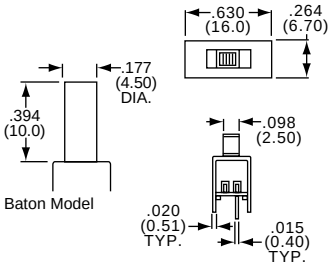

Baton



MHS122K

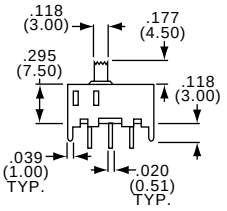

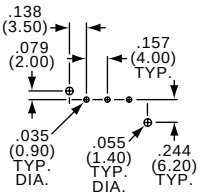

MHS122
MHS123

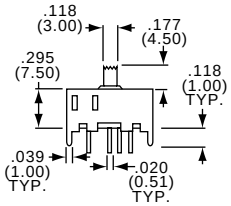

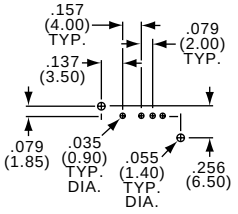

MHS133

Standard Model	Baton Model	Type				Contacts
MHS122	MHS122K	SPDT	On	None	On	Silver
MHS123	MHS123K	SPDT	On	Off	On	Silver
MHS133	MHS133K	SP3T	On	On	On	Silver
MHS122G	MHS122KG	SPDT	On	None	On	Gold
MHS123G	MHS123KG	SPDT	On	Off	On	Gold
MHS133G	MHS133KG	SP3T	On	On	On	Gold

DPDT/DP3T

Standard



MHS233

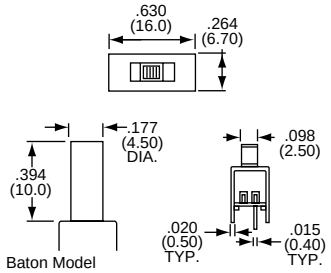

Baton



MHS233K

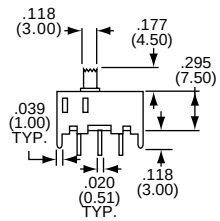

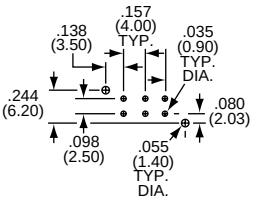

MHS222
MHS223

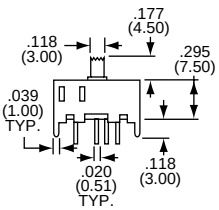

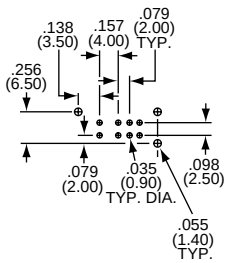

MHS233

Standard Model	Baton Model	Type				Contacts
MHS222	MHS222K	DPDT	On	None	On	Silver
MHS223	MHS223K	DPDT	On	Off	On	Silver
MHS233	MHS233K	DP3T	On	On	On	Silver
MHS222G	MHS222KG	DPDT	On	None	On	Gold

For complete product information, order Catalog 1308390

Products for Industrial & Commercial Applications

Dimensions are shown for reference purposes only.

Dimensions are in inches and millimeters unless otherwise specified. Values in brackets are metric equivalents.

Specifications subject to change.

Technical Support Center
1-800-522-6752
www.tycoelectronics.com

Slide Switches, Low Profile, Right Angle, Instrumentation Grade

SEE PAGE 6020 FOR PRODUCT SPECIFICATIONS

SPDT/SP3T



MHS122RA



MHS133GRA

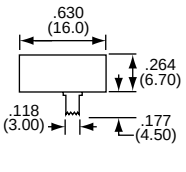

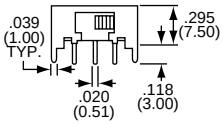

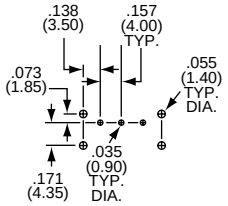

MHS122/123

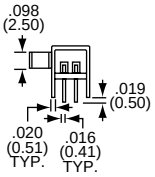

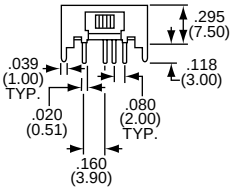

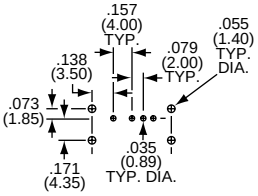

MHS133

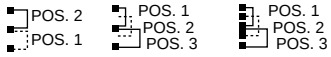

Model	Type				Contacts	Actuator Travel
MHS122RA	SPDT	On	None	On	Silver	.158
MHS123RA	SPDT	On	Off	On	Silver	.079
MHS133RA	SP3T	On	On	On	Silver	.079
MHS122GRA	SPDT	On	None	On	Gold	.158
MHS123GRA	SPDT	On	Off	On	Gold	.079
MHS133GRA	SP3T	On	On	On	Gold	.079

DPDT/DP3T



MHS222RA



MHS233GRA

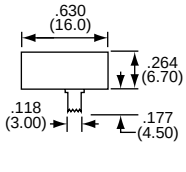

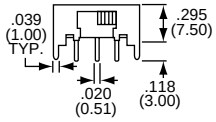

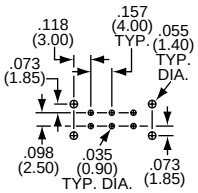

MHS222/223

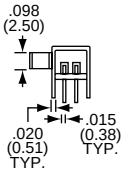

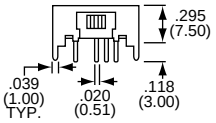

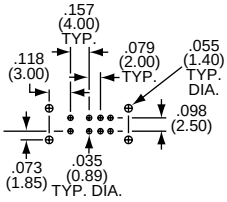

MHS233

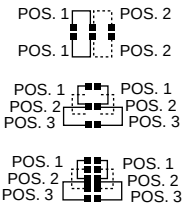

Model	Type				Contacts	Actuator Travel
MHS222RA	DPDT	On	None	On	Silver	.158
MHS223RA	DPDT	On	Off	On	Silver	.079
MHS233RA	DP3T	On	On	On	Silver	.079
MHS222GRA	SPDT	On	None	On	Gold	.158
MHS233GRA	DP3T	On	On	On	Gold	.079

4P3T



MHS433RA

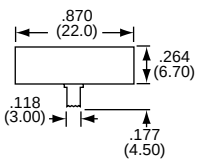

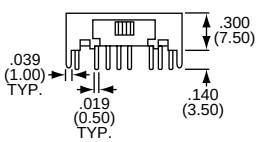

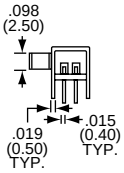

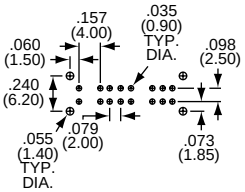

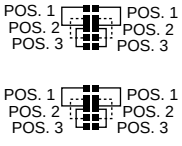

Model	Type				Contacts	Actuator Travel
MHS433RA	4P3T	On	On	On	Silver	.079

For complete product information, order Catalog 1308390

Products for Industrial & Commercial Applications

Dimensions are shown for reference purposes only.

Dimensions are in inches and millimeters unless otherwise specified. Values in brackets are metric equivalents.

Specifications subject to change.

Technical Support Center
1-800-522-6752
www.tycoelectronics.com

Slide Switches, Micro Size, Instrumentation Grade

MATERIAL SPECIFICATIONS:

Contacts .....Silver plate over copper alloy
Cover Base Material.....Polyester
Actuator Material .....Polyacetal
Terminals .....Silver plate over copper alloy
Terminal Seal .....Molded in

ENVIRONMENTAL SPECIFICATIONS:

Operating Temperature.....+14°F to +140°F (-10°C to +60°C)
Storage Temperature.....-4°F to +140°F (-20°C to +60°C)
Solder Heat Resistance.....270°C+10°C, 5 seconds per MIL-STD-202, Method 210

TYPICAL PERFORMANCE CHARACTERISTICS:

Contact Rating .....100 Milliamps @ 12 VDC
Initial Contact Resistance.....30 Milliohms max.
Contact Timing.....Shorting – bifurcated contacts
Insulation Resistance .....100 Megohms min.
Dielectric Strength .....500 Volts RMS @ sea level
Actuation Force .....250 Grams, (+200g, -150g)
Actuator Travel.....0.079”
Life Expectancy .....10,000 Cycles

SPDT



SSJ12

Model	Plating	Mounting Style
SSJ12	Silver	Upright

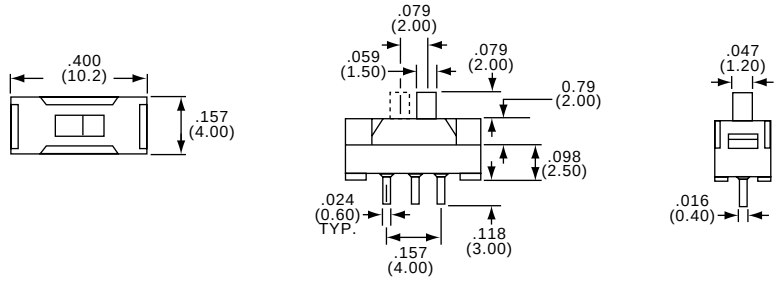

SPDT



SSJ12R

Model	Plating	Mounting Style
SSJ12R	Silver	Right Angle

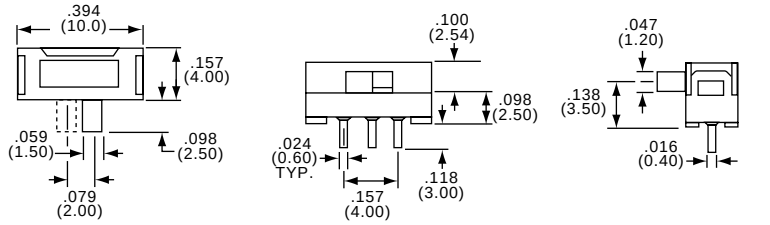

SP3T



SSJ13

Model	Plating	Mounting Style
SSJ13	Silver	Upright

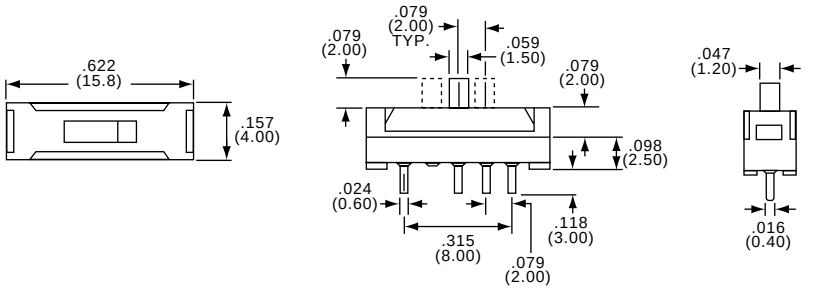

For complete product information, order Catalog 1308390

Products for Industrial & Commercial Applications

Dimensions are shown for reference purposes only.

Dimensions are in inches and millimeters unless otherwise specified. Values in brackets are metric equivalents.

Specifications subject to change.

Technical Support Center
1-800-522-6752
www.tycoelectronics.com

Slide Switches, Micro Size, Instrumentation Grade

MATERIAL SPECIFICATIONS:

Contacts .....Silver plate over copper alloy
Case Material .....Polyacetal UL94HB
Actuator Material .....Polyester UL94HB
Terminals .....Silver plate over copper alloy
Terminal Seal .....Epoxy
Terminal Board.....UL 94 V-O

ENVIRONMENTAL SPECIFICATIONS:

Operating Temperature.....+14°F to +140°F (-10°C to +60°C)
Storage Temperature.....+14°F to +140°F (-10°C to +60°C)
Solder Heat Resistance.....230 ± 150 grams ± 5ºC for 3 seconds per MIL-STD-202, Method 210

TYPICAL PERFORMANCE CHARACTERISTICS:

Contact Rating .....100 mA @ 30 VDC or peak AC
Initial Contact Resistance.....30 Millohms max.
Contact Timing.....Shorting
Insulation Resistance .....1,000 Megohms min.
Dielectric Strength .....500 VAC
Actuation Force .....200 ± 150 Grams
Life Expectancy .....10,000 Cycles

SPDT



MMS12

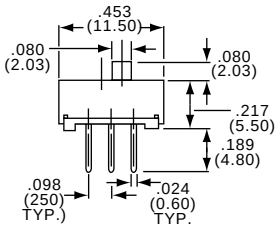

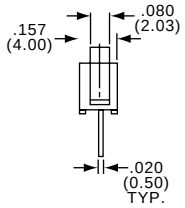

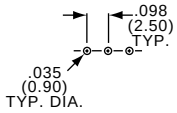

Model	Type	Plating	Mounting Style
MMS12	SPDT	Silver	Upright

DPDT



MMS22

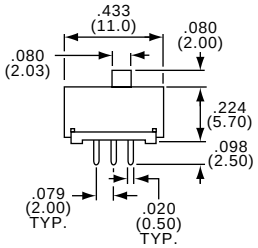

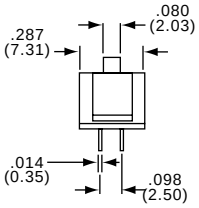

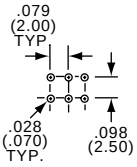

Model	Type	Plating	Mounting Style
MMS22	DPDT	Silver	Upright

DPDT



MMS22R

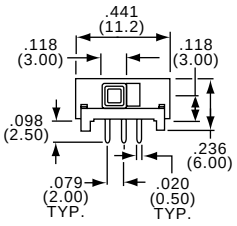

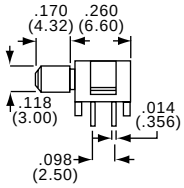

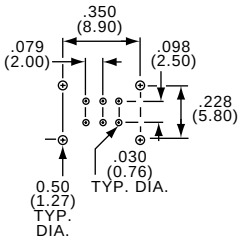

Model	Type	Plating	Mounting Style
MMS22R	DPDT	Silver	Right Angle

For complete product information, order Catalog 1308390

Products for Industrial & Commercial Applications

Dimensions are shown for reference purposes only.

Dimensions are in inches and millimeters unless otherwise specified. Values in brackets are metric equivalents.

Specifications subject to change.

Technical Support Center
1-800-522-6752
www.tycoelectronics.com

Slide Switches, Micro Size, Instrumentation Grade

MATERIAL SPECIFICATIONS:

Contacts .....Gold or silver plate over nickel plate
Case Material .....Steel, tin plate
Actuator Material .....Polyacetal UL94HB
Terminals .....Gold or silver plate over nickel plate
Terminal Seal .....Epoxy

ENVIRONMENTAL SPECIFICATIONS:

Operating Temperature.....-4°F to +176°F (-20°C to +80°C)
Storage Temperature.....-40°F to +212°F (-40°C to +100°C)
Solder Heat Resistance.....+260°C (+500°F) for 5 seconds
per MIL-STD-202, Method 210

TYPICAL PERFORMANCE CHARACTERISTICS:

Contact Rating .....Gold: 0.4 VA @ 20 VDC or peak AC
Silver: 100 mA @ 30 VDC
Initial Contact Resistance.....30 Millohms max.
Contact Timing.....Shorting
Insulation Resistance .....100 Megohms min.
Dielectric Strength .....500 VAC
Actuation Force .....250 ± 150 Grams
Life Expectancy .....10,000 Cycles

SPDT



SSB12

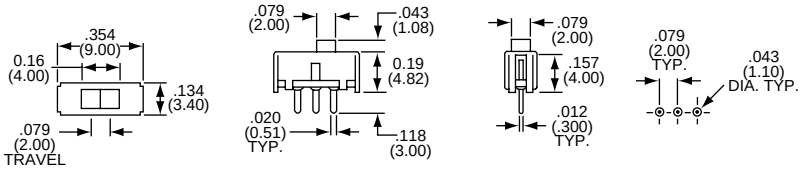

Model	Type	Plating	Mounting Style
SSB12	SPDT	Silver	Upright
SSB12G	SPDT	Gold	Upright

SPDT



SSB12R

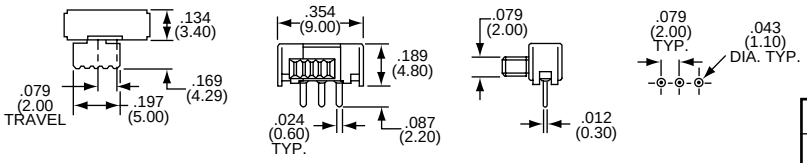

Model	Type	Plating	Mounting Style
SSB12R	SPDT	Silver	Right Angle
SSB12RG	SPDT	Gold	Right Angle

DPDT



SSB22

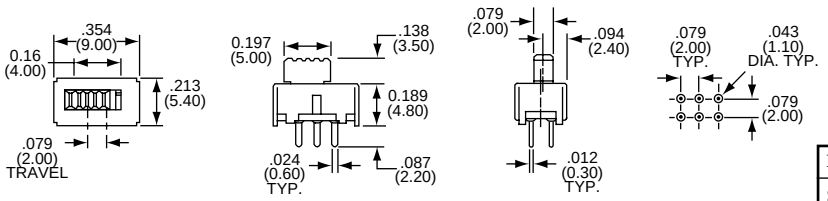

Model	Type	Plating	Mounting Style
SSB22	DPDT	Silver	Upright
SSB22G	DPDT	Gold	Upright

DPDT



SSB22R

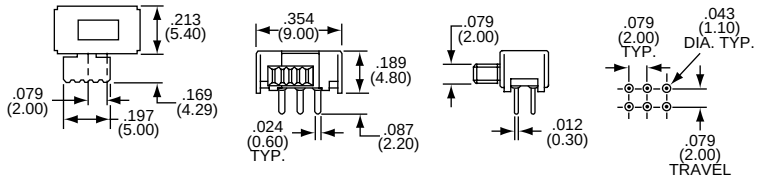

Model	Type	Plating	Mounting Style
SSB22R	DPDT	Silver	Right Angle
SSB22RG	DPDT	Gold	Right Angle

4PDT



SSB42

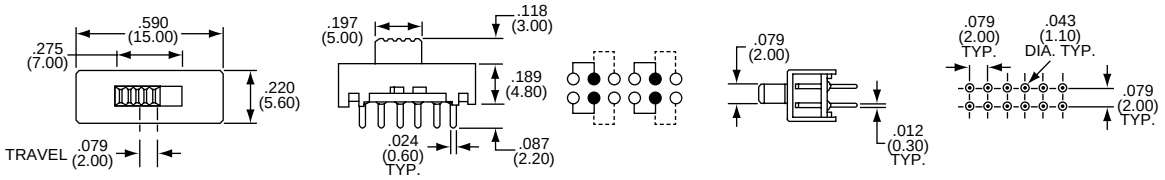

Model	Type	Plating	Mounting Style
SSB42	4PDT	Silver	Upright
SSB42G	4PDT	Gold	Upright

For complete product information, order Catalog 1308390

Products for Industrial & Commercial Applications

Dimensions are shown for reference purposes only.

Dimensions are in inches and millimeters unless otherwise specified. Values in brackets are metric equivalents.

Specifications subject to change.

Technical Support Center
1-800-522-6752
www.tycoelectronics.com

Slide Switches, Micro Size, Instrumentation Grade

MATERIAL SPECIFICATIONS:

Contacts .....Silver or gold plate
Case Material .....Polyester PPS UL94VO
Actuator Material .....Polyamide UL94HB
Cover Material .....Polyamide UL94HB
Terminals .....Silver or gold plate
Terminal Seal .....Epoxy

ENVIRONMENTAL SPECIFICATIONS:

Operating Temperature.....-4°F to +158°F (-20°C to +70°C)
Storage Temperature.....-40°F to +194°F (-40°C +90°C
Solder Heat Resistance.....260°C (+500°F) for 5 seconds per MIL-STD-202, Method 210

TYPICAL PERFORMANCE CHARACTERISTICS:

Contact Rating .....Gold: 0.4 VA max. @ 20 VDC or peak AC
Silver: 100 Milliamps @ 30 VDC
Initial Contact Resistance.....30 Milliohms max.
Contact Timing.....Break-Before-Make
Insulation Resistance .....100 Megohms min.
Dielectric Strength .....500 VAC
Actuation Force .....250 ± 100 Grams
Actuator Travel.....098" (2.49)
Life Expectancy .....10,000 Cycles

SPDT



SSA12

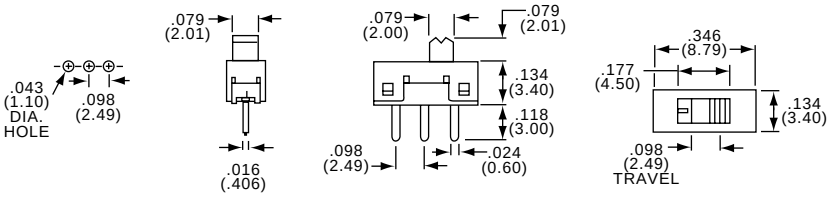

Model	Plating	Mounting Style
SSA12	Silver	Upright
SSA12G	Gold	Upright

DPDT



SSA22

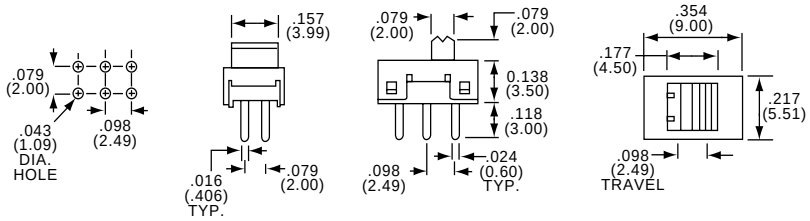

Model	Plating	Mounting Style
SSA22	Silver	Upright
SSA22G	Gold	Upright

For complete product information, order Catalog 1308390

Products for Industrial & Commercial Applications

Dimensions are shown for reference purposes only.

Dimensions are in inches and millimeters unless otherwise specified. Values in brackets are metric equivalents.

Specifications subject to change.

Technical Support Center
1-800-522-6752
www.tycoelectronics.com

Slide Switches, Panel Mount, Wiping Contact, Consumer Grade

MATERIAL SPECIFICATIONS:

Contacts .....Silver plate
Case Material .....Steel
Actuator Material .....Phenolic
Terminals/Fixed Contacts.....Silver plate
Terminal Seal .....Epoxy

ENVIRONMENTAL SPECIFICATIONS:

Operating Temperature.....-4°F to +185°F (-20°C to +85°C)
Storage Temperature.....-40°F to +212°F (-40°C to +100°C)
Solder Heat Resistance.....+300°C (+572°F) for 5 seconds

TYPICAL PERFORMANCE CHARACTERISTICS:

Contact Rating .....500 mA @ 125 VAC, 200 mA @ 12 VDC
Initial Contact Resistance.....30 Millohms max.
Contact Timing.....Break-Before-Make
Insulation Resistance .....500 Megohms min.
Dielectric Strength .....500 VAC
Actuation Force .....SLS: 120 Grams; SLSA: 220, 350 ±150
Plunger/Actuator Travel: .....0.106" (2.69)
Shoe Contact: .....SLS (A) 120: 250 grams ± 130-100
SLS (A) 220: 350 grams ± 150 grams
Life Expectancy .....SLS: 6,000 Cycles; SLSA: 10,000 Cycles

SPDT



SLS120

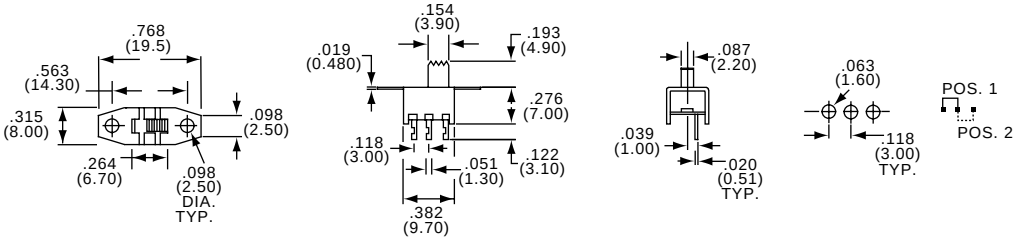

Model	Type	Mounting	Terminals Contacts
SLS120	SPDT	With Tabs	Lug, Silver Plated

SPDT



SLSA120

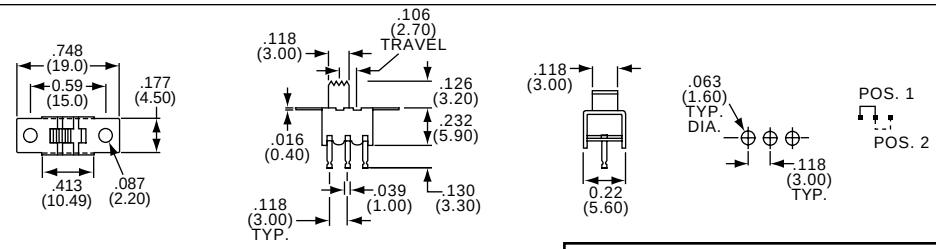

Model	Type	Mounting	Terminals Contacts
SLSA120	SPDT	With Tabs	Turret, Silver Plated

DPDT



SLS220

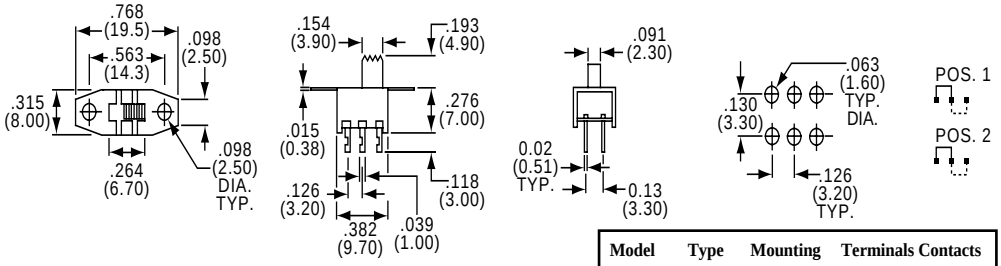

Model	Type	Mounting	Terminals Contacts
SLS220	DPDT	With Tabs	Lug, Silver Plated

DPDT



SLSA220

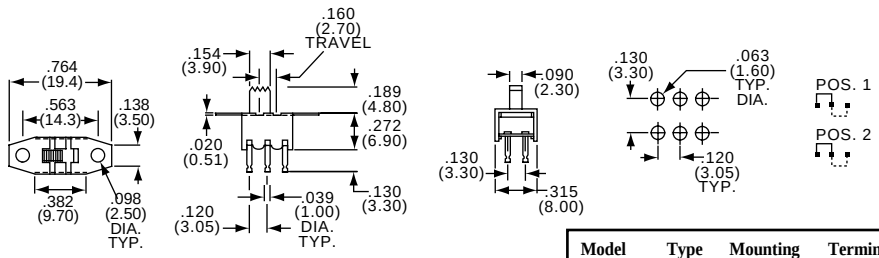

Model	Type	Mounting	Terminals Contacts
SLSA220	DPDT	With Tabs	Turret, Silver Plated

For complete product information, order Catalog 1308390

Slide Switches, PC Tails, Wiping Contact, Consumer Grade

MATERIAL SPECIFICATIONS:

Contacts .....Silver plate over copper alloy
Case Material .....Steel
Actuator Material .....Polycarbonate
Terminals/Fixed Contacts.....Silver plate over brass
Terminal Seal .....Epoxy

ENVIRONMENTAL SPECIFICATIONS:

Operating Temperature.....14°F to +140°F (-10°C to +60°C)
Storage Temperature.....14°F to +140°F (-10°C to +60°C)

TYPICAL PERFORMANCE CHARACTERISTICS:

Contact Rating .....250 mA @ 125 VAC, 150 mA @ 12 VDC
Initial Contact Resistance.....30 Milliohms max.
Contact Timing.....Break before make
Insulation Resistance .....500 Megohms min.
Dielectric Strength .....500 VAC
Actuation Force .....250 Grams + 150 - 100
Actuator Travel.....126" (3.20)
Life Expectancy .....10,000 Cycles

2 TO 6 POSITIONS



SLS250PC



SLS220PC



SLS240PCA



SLS230PC

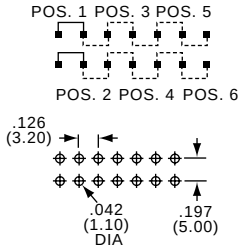

Model	Type	Dim.A	Dim.B
SLS220PC	2 Positions	.272(6.91)	.535(13.59)
SLS230PC	3 Positions	.398(10.11)	.661(16.79)
SLS240PCA	4 Positions	.524(13.31)	.787(19.99)
SLS250PC	5 Positions	.650(16.51)	.913(23.19)
SLS260PC	6 Positions	.776(19.71)	1.039(26.39)

SL Series

Slide Switches, PC Tails, Lever or Knob Actuator

2 TO 10 POSITIONS



SL660
(with KSS KNOB)



SL550



SL770

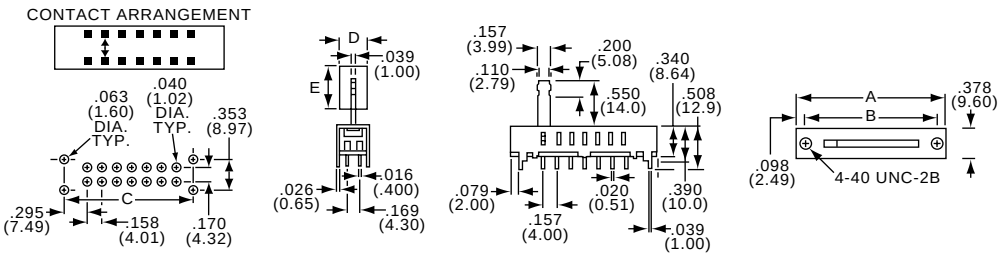

Model	Type	Dim. A	Dim. B	Dim. C	Knob Only	Description	Dim. D	Dim. E
SL220	2 Positions	.95(24.13)	.750(19.05)	.750(19.05)	KSS10A	Aluminum-Clear Anodize	.270(6.86)	.500(12.70)
SL330	3 Positions	1.11(28.19)	.910(23.1)	.910(23.1)	KSS10B	Aluminum-Black Anodize	.270(6.86)	.500(12.70)
SL550	5 Positions	1.42(36.07)	1.22(30.99)	1.22(31.1)	KSS20A	Aluminum-Clear Anodize	.305(7.75)	.512(13.00)
SL660	6 Positions	1.58(40.13)	1.38(35.05)	1.38(35.1)	KSS20B	Aluminum-Black Anodize	.305(7.75)	.512(13.00)
SL770	7 Positions	1.74(44.20)	1.54(39.12)	1.54(39.1)				
SL880	8 Positions	1.89(48.01)	1.70(43.18)	1.70(43.1)				
SL1000	10 Positions	2.21(56.13)	2.01(51.05)	2.01(51.5)				

For complete product information, order Catalog 1308390

Products for Industrial & Commercial Applications

Dimensions are shown for reference purposes only.

Dimensions are in inches and millimeters unless otherwise specified. Values in brackets are metric equivalents.

Specifications subject to change.

Technical Support Center
1-800-522-6752
www.tycoelectronics.com

Slide Switches, Wiping Contacts, Consumer Grade

MATERIAL SPECIFICATIONS:

Contacts .....Silver plate
Case Material .....Steel
Actuator Material .....Phenolic
Terminals/Fixed Contacts.....Silver plate
Terminal Seal .....Epoxy

ENVIRONMENTAL SPECIFICATIONS:

Operating Temperature.....-4°F to + 185°F (-20°C to + 85°C)
Storage Temperature.....-40°F to + 212°F (-40°C to + 100°C)
Solder Heat Resistance .....+300°C (+572°F) for 5 seconds

TYPICAL PERFORMANCE CHARACTERISTICS:

Contact Rating .....500 mA @ 125 VAC, 200 mA @ 12 VDC
Initial Contact Resistance.....30 Millohms max.
Contact Timing.....Break before make
Insulation Resistance .....500 Megohms min.
Dielectric Strength .....500 VAC
Actuation Force .....150-500 Grams
Plunger/Actuator Travel: 106 (2.69)
Life Expectancy .....10,000 Cycles

SPDT



Lug

SLS1201

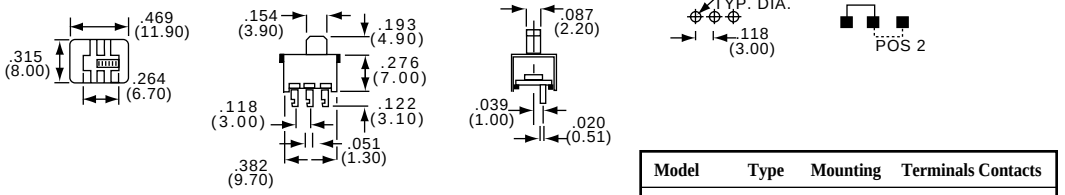

Model	Type	Mounting	Terminals Contacts
SLS1201	SPDT	Less Tabs	Lug, Silver Plated

DPDT



Lug

SLS2201

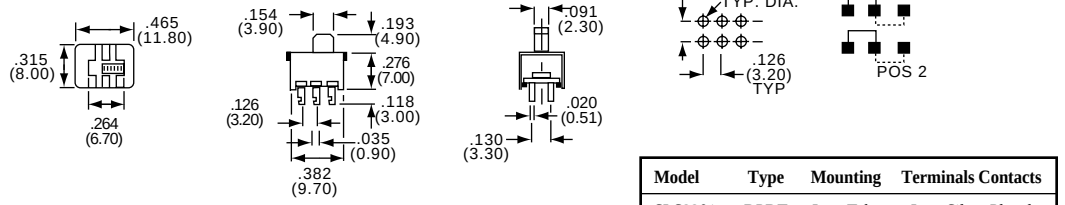

Model	Type	Mounting	Terminals Contacts
SLS2201	DPDT	Less Tabs	Lug, Silver Plated

SPDT



Turret

SLSA1201

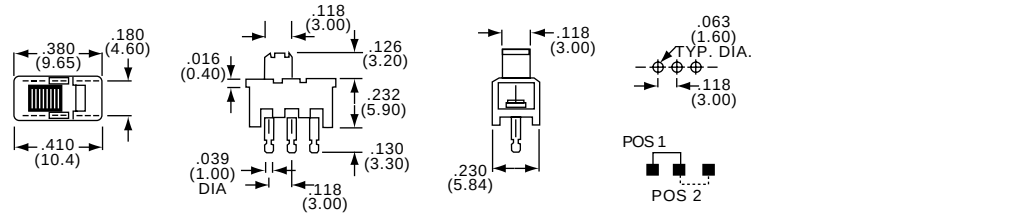

Model	Type	Mounting	Terminals Contacts
SLSA1201	SPDT	Less Tabs	Turret, Silver Plated

DPDT



Turret

SLSA2201

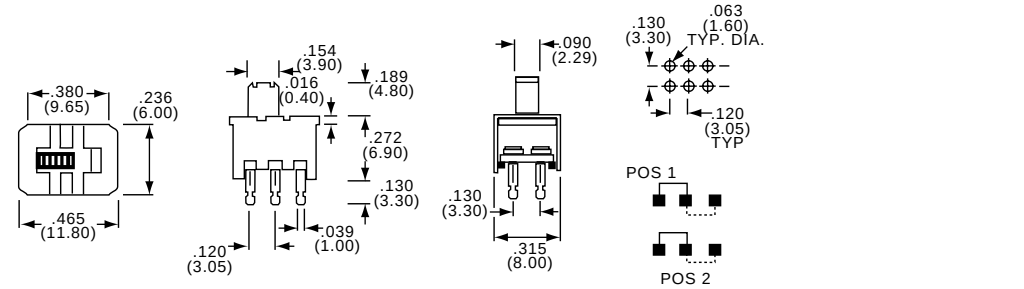

Model	Type	Mounting	Terminals Contacts
SLSA2201	DPDT	Less Tabs	Turret, Silver Plated

For complete product information, order Catalog 1308390

Products for Industrial & Commercial Applications
Dimensions are shown for reference purposes only.
Dimensions are in inches and millimeters unless otherwise specified. Values in brackets are metric equivalents.
Specifications subject to change.
Technical Support Center 1-800-522-6752 www.tycoelectronics.com

Slide Switches, Miniature, Rolling Contact, Economy Grade

MATERIAL SPECIFICATIONS:

Contacts .....Silver over nickel plate over copper alloy
Case Material .....Tin plate over steel
Actuator Material .....Polycarbonate
Terminals/Fixed Contacts.....Silver over nickel plate over copper alloy

ENVIRONMENTAL SPECIFICATIONS:

Operating Temperature.....14°F to +140°F (-10°C to +60°C)
Storage Temperature.....14°F to +140°F (-10°C to +60°C)

TYPICAL PERFORMANCE CHARACTERISTICS:

Contact Rating .....250 mA @ 125 VAC, 150 mA @ 12 VDC
Initial Contact Resistance.....30 Milliohms max.
Contact Timing.....Break before make
Insulation Resistance .....500 Megohms min.
Dielectric Strength .....500 VAC
Actuation Force .....150 to 400 Grams
Actuator Travel.....0.126" (3.20)
Life Expectancy .....6,000 Cycles

SPDT



SLS121PC

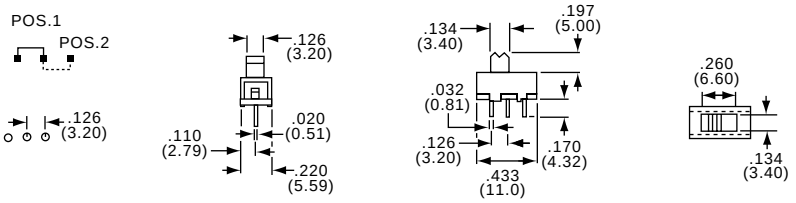

Model	Mounting Style
SLS121PC	Printed Circuit

SPDT



SLS121RA

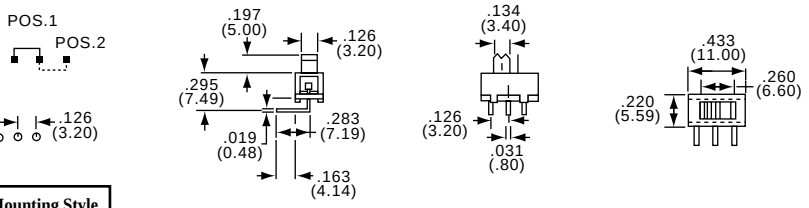

Model	Mounting Style
SLS121RA	Right Angle PC

SPDT



SLS1211

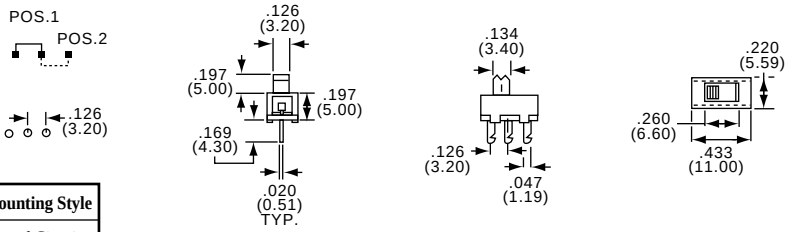

Model	Mounting Style
SLS1211	Printed Circuit

SPDT



SLS121

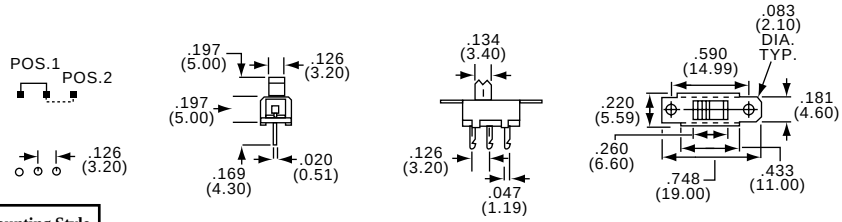

Model	Mounting Style
SLS121	Panel Mounted

For complete product information, order Catalog 1308390

Slide Switches, Miniature, Rolling Contact, Economy Grade

MATERIAL SPECIFICATIONS:

Contacts .....Silver plate
Case Material .....Steel
Actuator Material .....Polycarbonate
Terminals/Fixed Contacts.....Silver over nickel

ENVIRONMENTAL SPECIFICATIONS:

Operating Temperature.....+14°F to +140°F (-10°C to +60°C)
Storage Temperature.....+14°F to +140°F (-10°C to +60°C)
Solder Heat Resistance.....+260°C for 5 seconds

TYPICAL PERFORMANCE CHARACTERISTICS:

Contact Rating .....250mA @ 125 VAC
150mA @ 12VDC
Initial Contact Resistance.....20 Millohms max.
Contact Timing.....Break-Before-Make
Insulation Resistance .....>50 Megohms.
Dielectric Strength .....500 Volts RMS @ sea level
Actuation Force .....340 ± 57 Grams
Plunger/Actuator Travel: .....260" to .512"
Life Expectancy .....>10,000 Cycles at no load

SP3T



SLS131PC

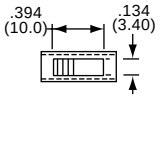

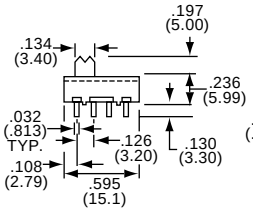

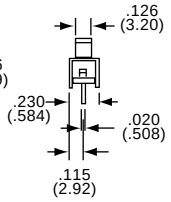

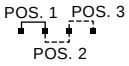

Model	Mounting Style
SLS131PC	Printed Circuit

SP3T



SLS131RA

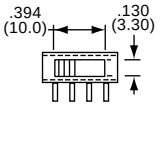

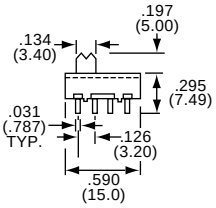

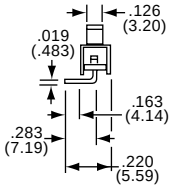

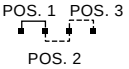

Model	Mounting Style
SLS131RA	Right Angle PC

SP4T



SLS141PC

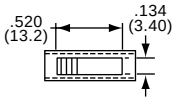

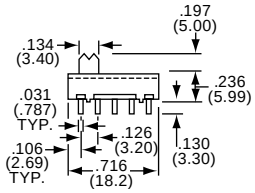

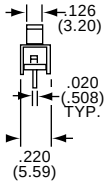

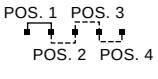

Model	Mounting Style
SLS141PC	Printed Circuit

SP4T



SLS141RA

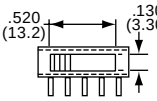

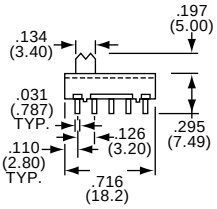

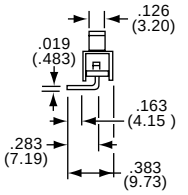

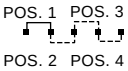

Model	Mounting Style
SLS141RA	Right Angle PC

SP5T



SLS151PC

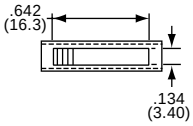

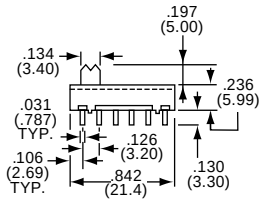

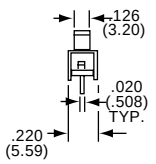

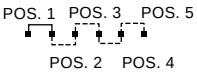

Model	Mounting Style
SLS151PC	Printed Circuit

SP5T



SLS151RA

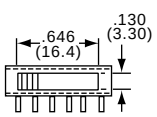

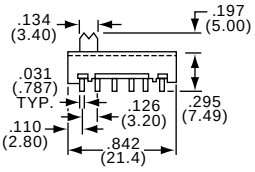

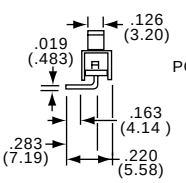

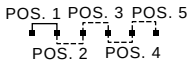

Model	Mounting Style
SLS151RA	Right Angle PC

Products for Industrial & Commercial Applications

Dimensions are shown for reference purposes only.

Dimensions are in inches and millimeters unless otherwise specified. Values in brackets are metric equivalents.

Specifications subject to change.

Technical Support Center
1-800-522-6752
www.tycoelectronics.com

TINY

Toggle Switches, Tiny, Vertical

MATERIAL SPECIFICATIONS:

Contacts……Gold over nickel or silver plate
Case Material……Thermoplastic 94V-0
Terminals/Fixed Contacts…….Tin lead plate
Terminal Seal……...Epoxy on single pole, optional on double pole

ENVIRONMENTAL SPECIFICATIONS

Operating Temperature……-22°F to +185°F (-30°C to +85°C)
Storage Temperature……-67°F to +185°F (-55°C to +85°C)
U.L. (File E-46765)…….Silver only

*** Refer to Page 6036 for Other Options ***

TYPICAL PERFORMANCE CHARACTERISTICS:

Contact Rating…….. 0.4 VA max. @ 20 VDC or peak AC or 3A @ 125 VAC or 28 VDC (2 pos.), 2 A
Initial Contact Resistance……20 Milliohms max.
Contact Timing……Break before Make
Insulation Resistance……1,000 Megohms 500 VDC min.
Dielectric Strength……1,000 Volts RMS @ sea level
Plunger/Actuator Travel……26°
High Torque Bushing Shoulder .....Yes
Life Expectancy……See page 6036

APPLICATION NOTE: TT21PA types are usable as SP3T when externally shunted.

1 POLE



TT11DGPC1

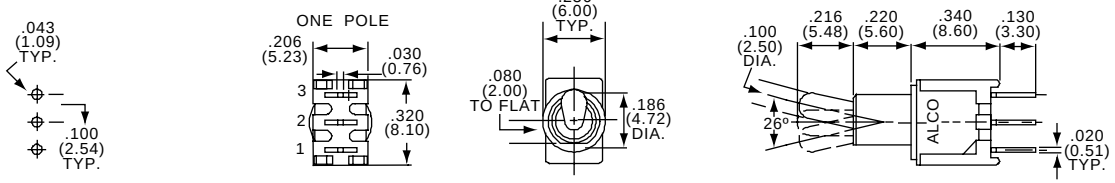

Model	Type	Act. Code P. K8	↘	⊥	↙
TT11AGPC1	SPST	A	On	None	Off
TT11DGPC1	SPDT	D	On	None	On
TT11EGPC1	SPDT	E	On	Off	On

Note: No center terminal on "A" switches

2 POLE



TT21NGPC1

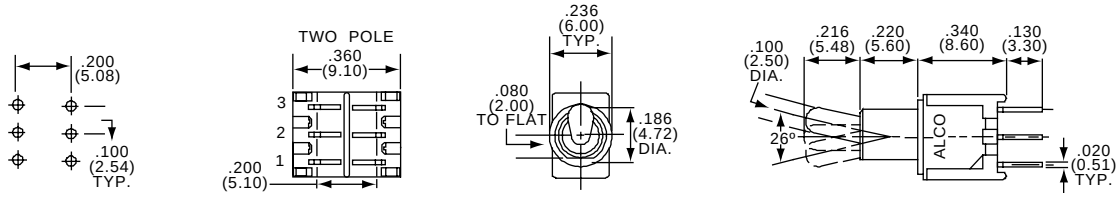

Model	Type	Act. Code P. K8	↘	⊥	↙
TT21KGPC1	DPST	K	On	None	Off
TT21NGPC1	DPDT	N	On	None	On
TT21PGPC1	DPDT	P	On	Off	On
TT21PAGPC1	SP3T	PA	On	On	On

Note: No center terminal on "K" switches

4 POLE



TT41NGPC1

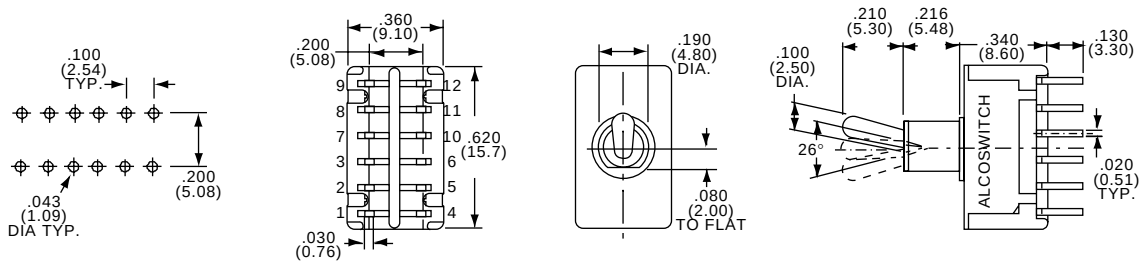

Model	Type	Act. Code P. K8	↘	⊥	↙
TT41NGPC1	4PDT	N	On	None	On

For complete product information, order Catalog 1308390

Toggle Switches, Tiny, Vertical and Right Angle

SEE PAGE 6031 FOR PRODUCT SPECIFICATIONS

1 & 2 POLE

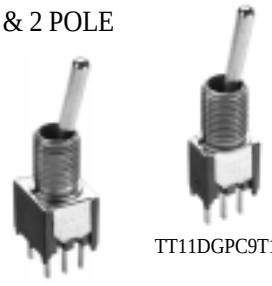

TT11DGPC9T1/4

TT21NGPC9T1/4

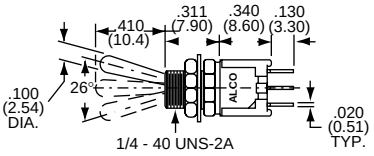

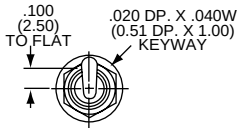

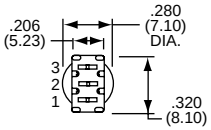

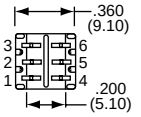

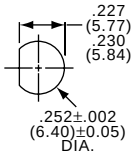

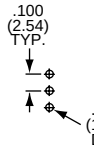

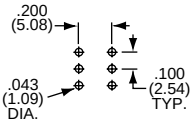

4 POLE



TT41NGPC9T1/4

Model	Type	Act. Code P. K8	◣	⊥	◢
TT11AGPC9T1/4	SPST	A	On	None	Off
TT11DGPC9T1/4	SPDT	D	On	None	On
TT11EGPC9T1/4	SPDT	E	On	Off	On
TT11FGPC9T1/4	SPDT	F	On	None	On
TT21KGPC9T1/4	DPST	K	On	None	Off

Note: No center terminal on "A" or "K" switches.

Model	Type	Act. Code P.K8	◣	⊥	◢
TT21NGPC9T1/4	DPDT	N	On	None	On
TT21PGPC9T1/4	DPDT	P	On	Off	On
TT21PAGPC9T1/4	SP3T	PA	On	On	On
TT21RGPC9T1/4	DPDT	R	On	None	(On)
TT41NGPC9T1/4	4PDT	N	On	None	On
TT41PGPC9T1/4	4PDT	P	On	Off	On

(On) indicates momentary position.

Note: Hardware Included

1 & 2 POLE



TT11DGVRA1
Vertical Actuation



TT21NGVRA1
Vertical Actuation

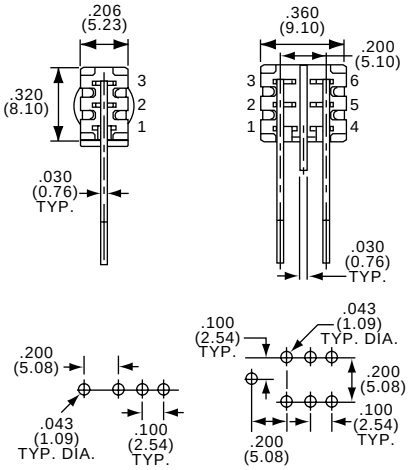

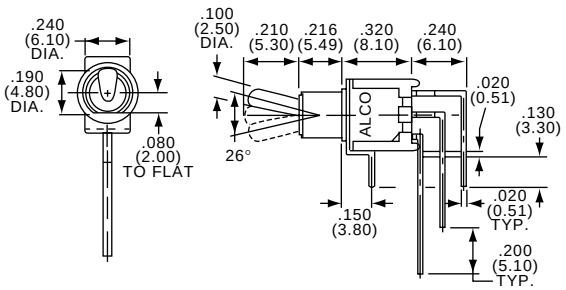

Model	Type	Act. Code P. K8	◣	⊥	◢
TT11DGVRA1	SPDT	D	On	None	On
TT11EGVRA1	SPDT	E	On	Off	On
TT21NGVRA1	DPDT	N	On	None	On
TT21PGVRA1	DPDT	P	On	Off	On

1 & 2 POLE



TT11DGVRA3T
Vertical Actuation



TT21NGVRA3T
Vertical Actuation

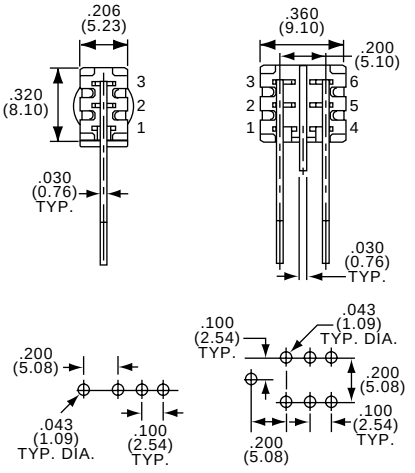

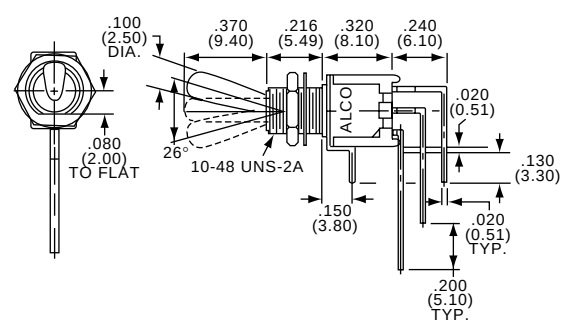

Model	Type	Act. Code P. K8	◣	⊥	◢
TT11DGVRA3T	SPDT	D	On	None	On
TT11EGVRA3T	SPDT	E	On	Off	On
TT21NGVRA3T	DPDT	N	On	None	On

Note: Hardware Included

Products for Industrial & Commercial Applications

Dimensions are shown for reference purposes only.

Dimensions are in inches and millimeters unless otherwise specified. Values in brackets are metric equivalents.

Specifications subject to change.

Technical Support Center
1-800-522-6752
www.tycoelectronics.com

Toggle Switches, Tiny, Right Angle, Flat Actuator

SEE PAGE 6031 FOR PRODUCT SPECIFICATIONS

1 & 2 POLE FLAT

*** Refer to Page 6036 for Other Options ***



TT11DGRA7T1/4
Horizontal Actuation

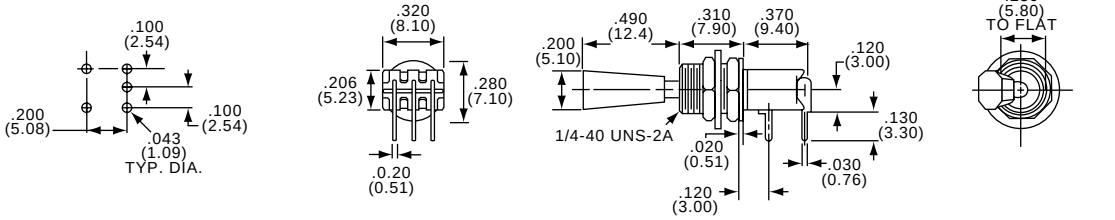



TT21NGRA7T1/4
Horizontal Actuation

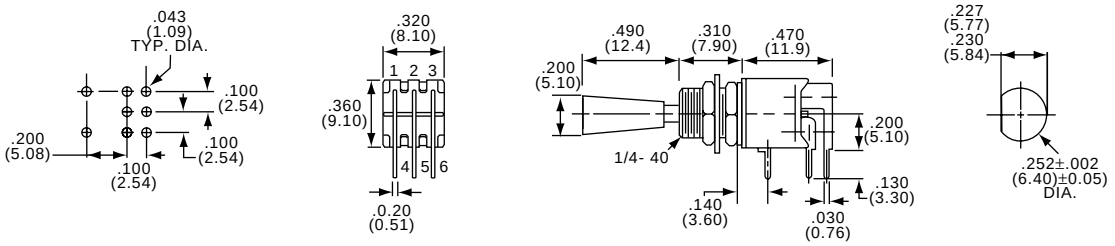

Model	Type	Act. Code P. K8	↘	⊥	↙
TT11DGRA7T1/4	SPDT	D	On	None	On
TT11EGRA7T1/4	SPDT	E	On	Off	On
TT11FGRA7T1/4	SPDT	F	On	None	(On)
TT21NGRA7T1/4	DPDT	N	On	None	On
TT21PGRA7T1/4	DPDT	P	On	Off	On
TT21PAGRA7T1/4	SP3T	PA	On	On	On

(On) indicates momentary position

Pinned for Anti-Rotation

Note: Hardware Included

4 POLE FLAT



TT41NGRA7T1/4
Horizontal Actuation

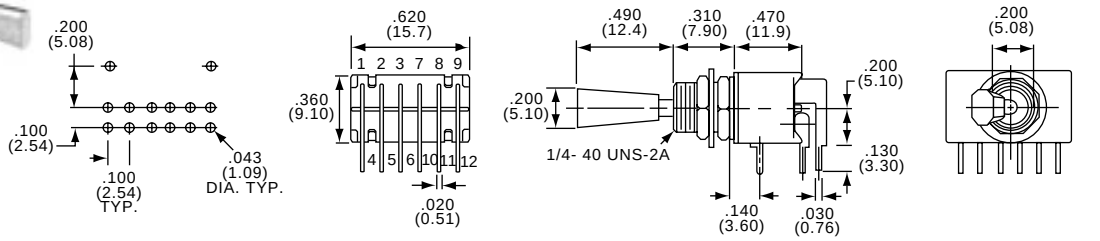

Model	Type	Act. Code P. K8	↘	⊥	↙
TT41NGRA7T1/4	4PDT	N	On	None	On

Pinned for Anti-Rotation

Note: Hardware Included

For complete product information, order Catalog 1308390

Products for Industrial & Commercial Applications

Dimensions are shown for reference purposes only.

Dimensions are in inches and millimeters unless otherwise specified. Values in brackets are metric equivalents.

Specifications subject to change.

Technical Support Center
1-800-522-6752
www.tycoelectronics.com

Toggle Switches, Tiny, Wire Lug, Round or Flat Actuators

SEE PAGE 6031 FOR PRODUCT SPECIFICATIONS

NOTICE: Wire lug terminals accept two No. 20 AWG wires.

1 & 2 POLE



TT13D2T



TT23N2T

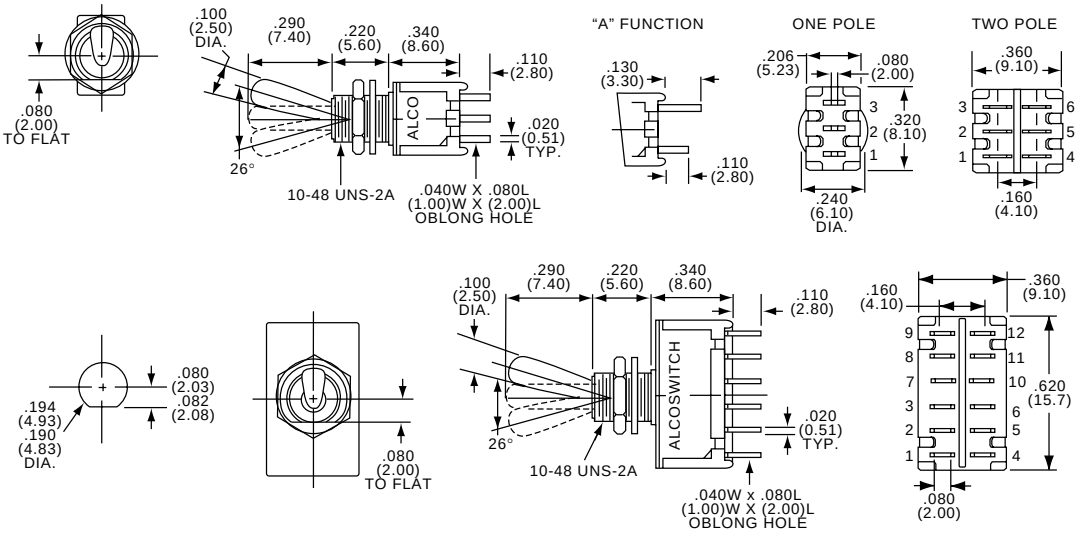

4 POLE



TT43N2T

Model	Type	Act. Code P. K8	↘	⊥	↙
TT13A2T	SPST	A	On	None	Off
TT13D2T	SPDT	D	On	None	On
TT13E2T	SPDT	E	On	Off	On
TT23K2T	DPST	K	On	None	Off

Model	Type	Act. Code P. K8	↘	⊥	↙
TT23N2T	DPDT	N	On	None	On
TT23P2T	DPDT	P	On	Off	On
TT43N2T	4PDT	N	On	None	On

Note: No center terminal "A" or "K" action switches.

1 & 2 POLE



TT13D7T1/4

TT23N7T1/4

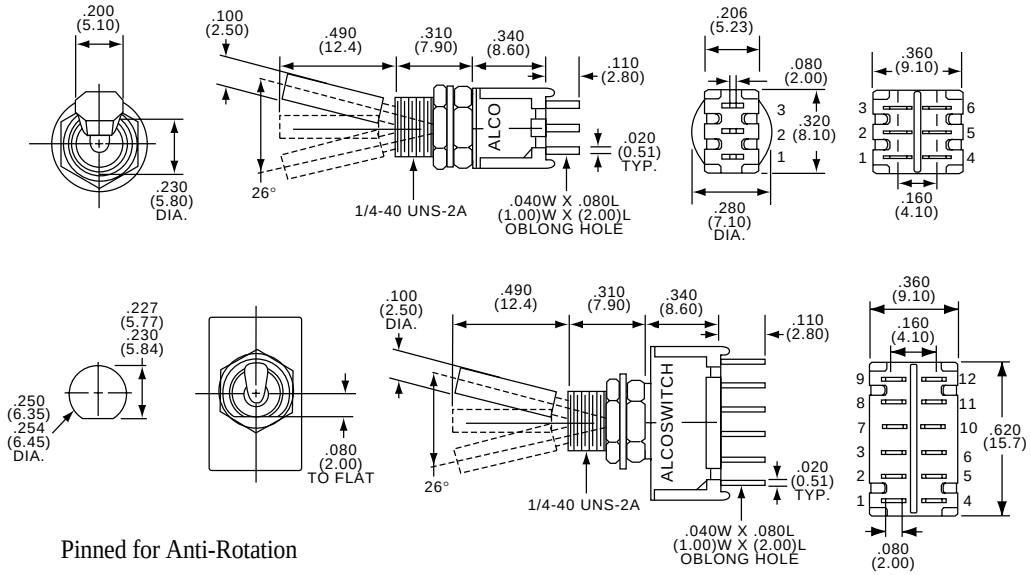

4 POLE



TT43N7T1/4

Pinned for Anti-Rotation

Model	Type	Act. Code P. K8	↘	⊥	↙
TT13D7T1/4	SPDT	D	On	None	On
TT13E7T1/4	SPDT	E	On	Off	On
TT23N7T1/4	DPST	N	On	None	On

Model	Type	Act. Code P. K8	↘	⊥	↙
TT23P7T1/4	DPDT	P	On	Off	On
TT43N7T1/4	4PDT	N	On	None	On
TT43P7T1/4	4PDT	P	On	Off	On

For complete product information, order Catalog 1308390

Products for Industrial & Commercial Applications

Dimensions are shown for reference purposes only.

Dimensions are in inches and millimeters unless otherwise specified. Values in brackets are metric equivalents.

Specifications subject to change.

Technical Support Center
1-800-522-6752
www.tycoelectronics.com

TINY

Toggle Switches, Tiny, Wire Lug, Long Actuators

SEE PAGE 6031 FOR PRODUCT SPECIFICATIONS

1 & 2 POLE



TT13D3T



TT23N3T

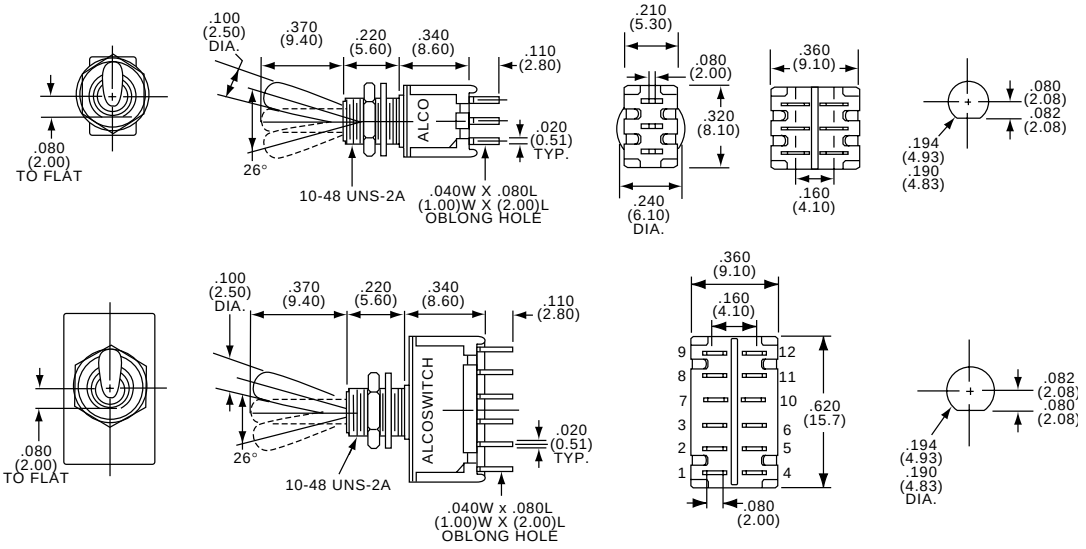

Model	Type	Act. Code P. K8	↘	⊥	↙
TT13A3T	SPST	A	On	None	Off
TT13D3T	SPDT	D	On	None	On
TT13E3T	SPDT	E	On	Off	On
TT23K3T	DPST	K	On	None	Off
TT23N3T	DPDT	N	On	None	On
TT23P3T	DPDT	P	On	Off	On
TT23PA3T	SP3T	PA	On	On	On
TT43N3T	4PDT	N	On	None	On
TT43P3T	4PDT	P	On	Off	On

Note: No center terminal on "A" or "K" action switches.

1 & 2 POLE



TT13A9T1/4



TT23N9T1/4

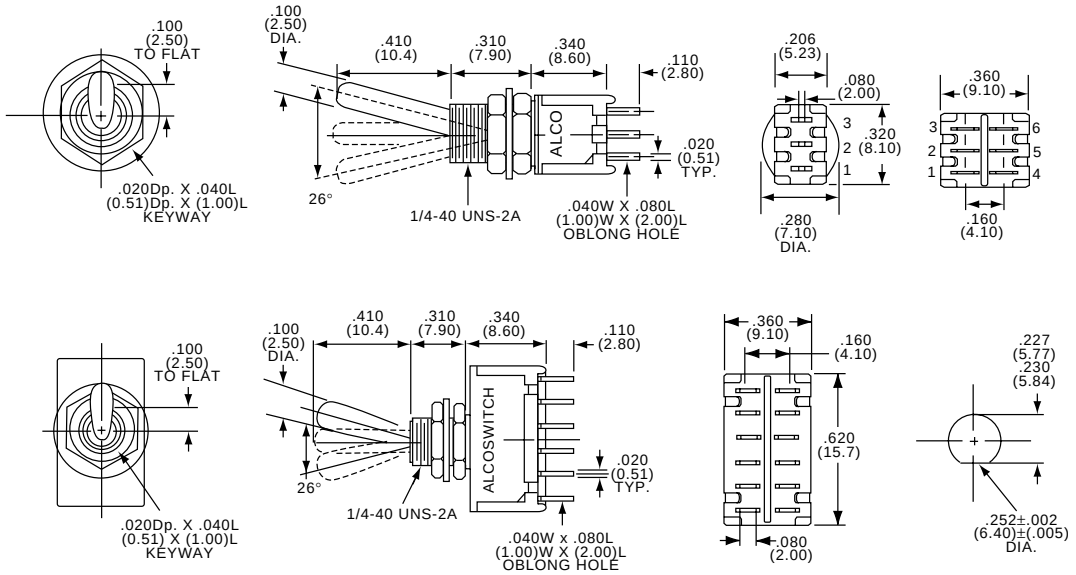

4 POLE



TT43N9T1/4

Model	Type	Act. Code P. K8	↘	⊥	↙
TT13A9T1/4	SPST	A	On	None	Off
TT13D9T1/4	SPDT	D	On	None	On
TT13E9T1/4	SPDT	E	On	Off	On
TT23K9T1/4	DPST	K	On	None	Off
TT23N9T1/4	DPDT	N	On	None	On
TT23P9T1/4	DPDT	P	On	Off	On
TT23PA9T1/4	SP3T	PA	On	On	On
TT43N9T1/4	4PDT	N	On	None	On
TT43P9T1/4	4PDT	P	On	Off	On

Note: No center terminal on "A" or "K" action switches.

For complete product information, order Catalog 1308390

Products for Industrial & Commercial Applications

Dimensions are shown for reference purposes only.

Dimensions are in inches and millimeters unless otherwise specified. Values in brackets are metric equivalents.

Specifications subject to change.

Technical Support Center
1-800-522-6752
www.tycoelectronics.com

TINY

Toggle Switches, Tiny, Part Number Matrix

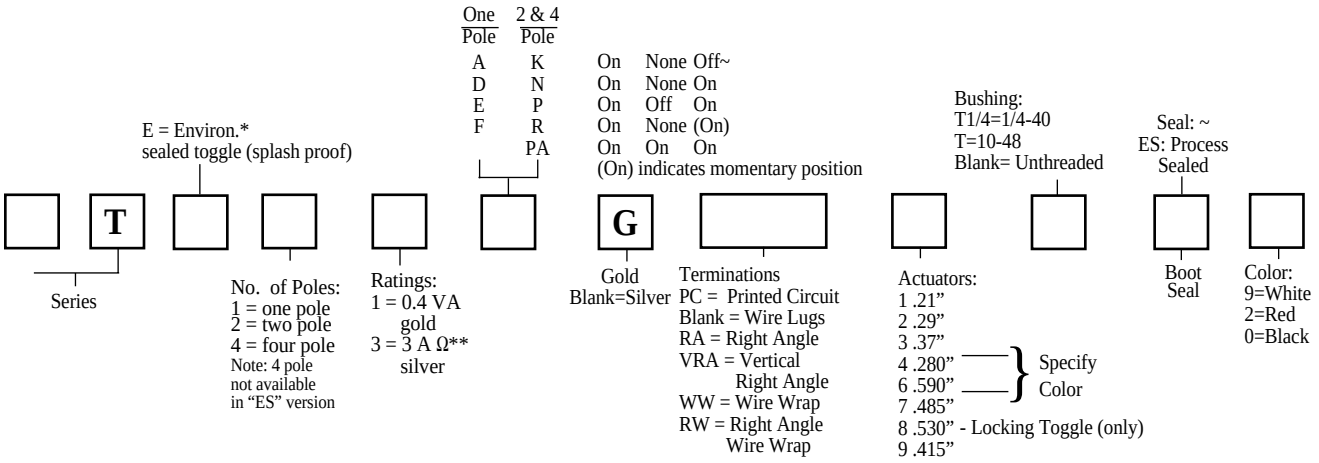

APPLICATION NOTE:
For surface mount termination, use the "TST" series.
For 3 pole refer to the MT Series on page 6038

Tiny toggle switch life expectancy chart			
One Pole	0.4VA	80,000 (2 Pos.)	60,000 (3 Pos.)
	3 Amp	20,000 (2 Pos.)	10,000 (3 Pos.)
Two Pole	0.4VA	80,000 (2 Pos.)	60,000 (3 Pos.)
	3 Amp	20,000 (2 Pos.)	10,000 (3 Pos.)
Four Pole	0.4VA	80,000 (2 Pos.)	60,000 (3 Pos.)
	3 Amp	20,000 (2 Pos.)	10,000 (3 Pos.)

Actuator Dimensions shown with	
1,2,3,4,6	10-48 bushing
7,8,9	1/4-40 bushing

*	Not available on 7 actuator or with VRA.
**	Not available in RA.
Ω	Available in PC & WL only.
~	Available in WL & PC only.

TERMINATIONS

WIRE LUG

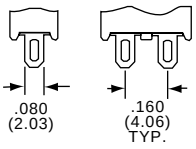

PC

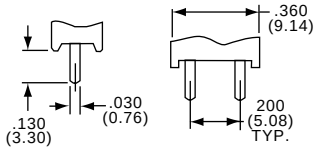

RA

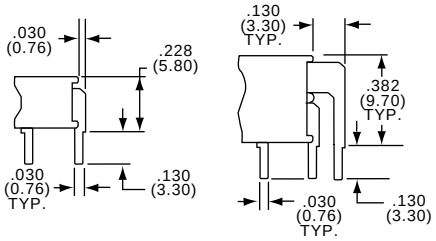

RW

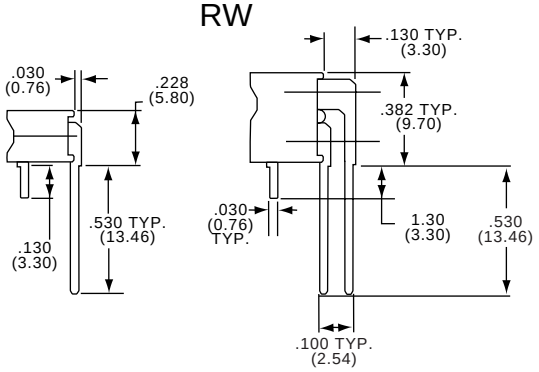

W/W

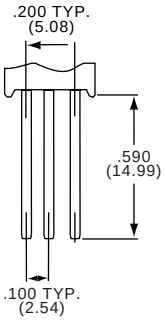

VRA

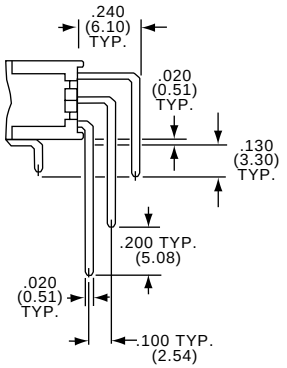

For complete product information, order Catalog 1308390

Products for Industrial & Commercial Applications

Dimensions are shown for reference purposes only.

Dimensions are in inches and millimeters unless otherwise specified. Values in brackets are metric equivalents.

Specifications subject to change.

Technical Support Center
1-800-522-6752
www.tycoelectronics.com

TINY

Toggle Switches, Tiny, Actuator and Bushing Options

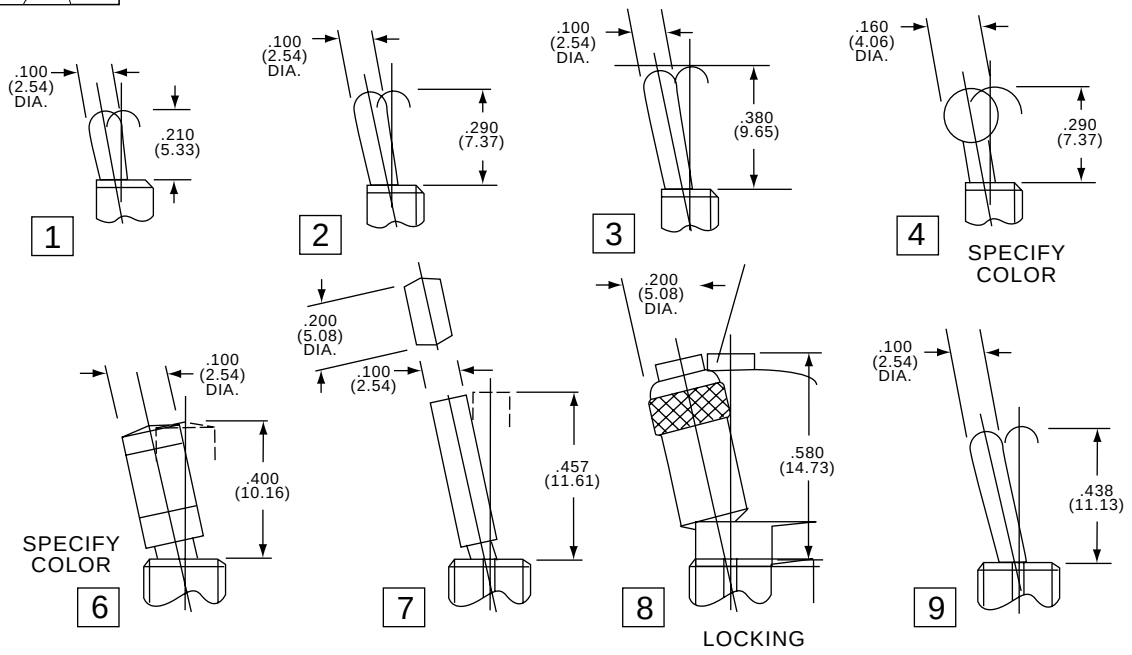

BUSHINGS

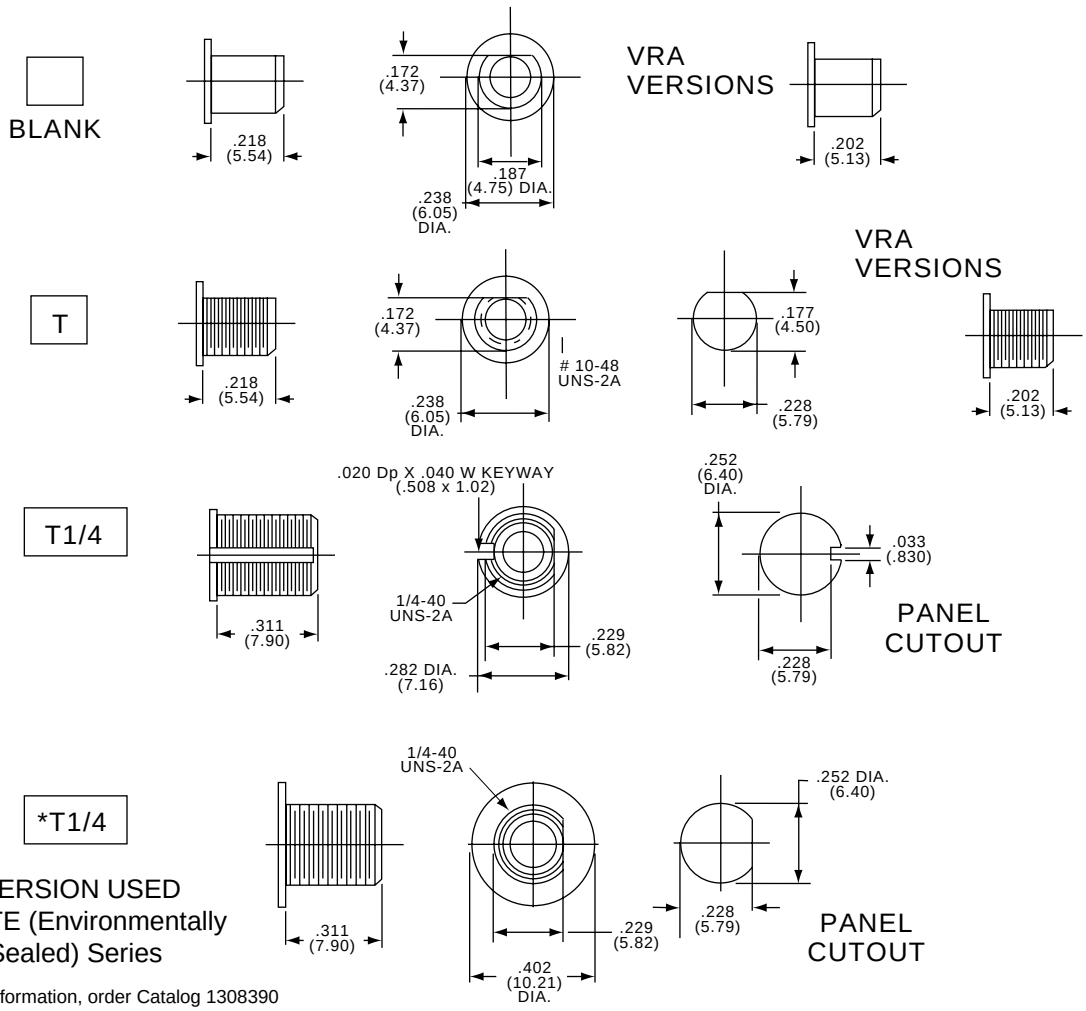

*VERSION USED ON TTE (Environmentally Sealed) Series

For complete product information, order Catalog 1308390

Products for Industrial & Commercial Applications

Dimensions are shown for reference purposes only.

Dimensions are in inches and millimeters unless otherwise specified. Values in brackets are metric equivalents.

Specifications subject to change.

Technical Support Center
1-800-522-6752
www.tycoelectronics.com

GREEN SERIES

Toggle Switches, Baton, Wire Lug, 6 Amp

MATERIAL SPECIFICATIONS:

Contacts .....Gold flash over silver
Actuator Material .....Chrome plated copper alloy
Case Material .....Thermoset 94V-0
Terminals .....Gold flash
Terminal Seal .....Insert molded

ENVIRONMENTAL SPECIFICATIONS

Operating Temperature ..... -20°C to +80°C (-4°F to +176°F)
Storage Temperature .....-40°C to +80°C (-40°F to +176°F)

UL Available when ordering . . . Consult factory.

TYPICAL PERFORMANCE CHARACTERISTICS:

Contact Rating .....6 A @ 125 VAC, 3 A @ 250 VAC
Initial Contact Resistance.....20 Milliohms max.
Contact Timing.....Break before make
Insulation Resistance .....1,000 Megohms min. @ 500 VDC min. for 1 minute
Dielectric Strength .....1,500 VAC
Actuation Force .....05-1.5 kg.
Actuator Travel .....24° (26° on MTL Series)
High Torque Bushing Shoulder .....Standard
Life Expectancy .....See chart below.

SPDT/DPDT/SP3T



MTA106D



MTA206N

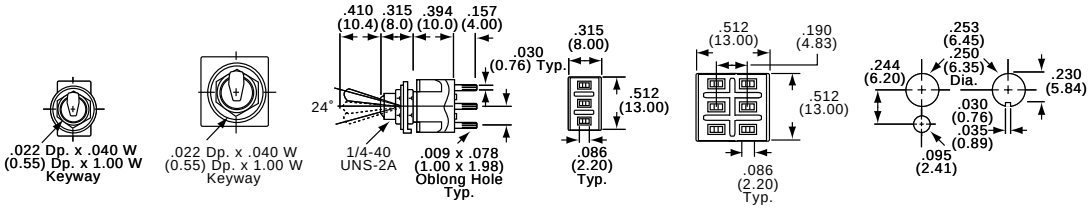

Model	Type	Act. Code P. K8		Special Details
MTA106D	SPDT	1	On None On	Wire Lug
MTA106E	SPDT	5	On Off On	Wire Lug
MTA106F	SPDT	1	On None(On)	Wire Lug
MTA106G	SPDT	5	(On) Off (On)	Wire Lug
MTA106H	SPDT	5	On Off (On)	Wire Lug

(On) indicates momentary position.

Model	Type	Act. Code P. K8		Special Details
MTA206N	DPDT	2	On None On	Wire Lug
MTA206P	DPDT	6	On Off On	Wire Lug
MTA206R	DPDT	2	On None (On)	Wire Lug
MTA206S	DPDT	6	(On) Off (On)	Wire Lug
MTA206T	DPDT	6	On Off On	Wire Lug
*MTA206PA	SP3T	11	On On On	Wire Lug
*MTA206SA	SP3T	11	(On) On (On)	Wire Lug
*MTA206TA	SP3T	11	On On (On)	Wire Lug

(On) indicates momentary position.
* Note: PA, SA & TA types have case .100/(2.50) longer than other types.

3PDT/4PDT/DP3T



MTA306D



MTA406N

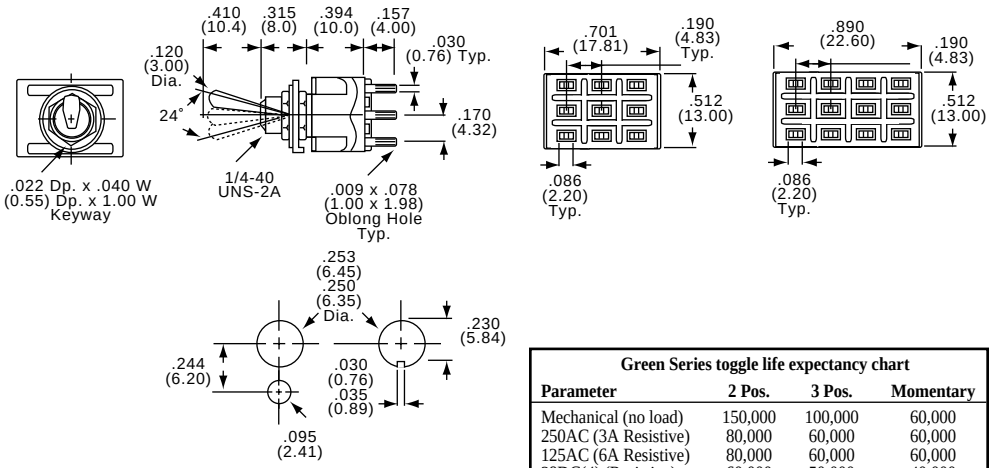

Green Series toggle life expectancy chart

Parameter	2 Pos.	3 Pos.	Momentary
Mechanical (no load)	150,000	100,000	60,000
250AC (3A Resistive)	80,000	60,000	60,000
125AC (6A Resistive)	80,000	60,000	60,000
28DC(4) (Resistive)	60,000	50,000	40,000

Model	Type	Act. Code P. K8		Special Details
MTA306D	3PDT	3	On None On	Wire Lug
MTA306E	3PDT	7	On Off On	Wire Lug
MTA306F	3PDT	3	On None (On)	Wire Lug
MTA306H	3PDT	7	On Off (On)	Wire Lug

(On) indicates momentary position.

Model	Type	Act. Code P. K8		Special Details
MTA406N	4PDT	4	On None On	Wire Lug
MTA406P	4PDT	8	On Off On	Wire Lug
*MTA406PA	DP3T	12	On On On	Wire Lug

*Note: PA types have case .100 (2.50) longer than other types.

Products for Industrial & Commercial Applications

Dimensions are shown for reference purposes only.

Dimensions are in inches and millimeters unless otherwise specified. Values in brackets are metric equivalents.

Specifications subject to change.

Technical Support Center
1-800-522-6752
www.tycoelectronics.com

GREEN SERIES

Toggle Switches, Baton, PC Tail, 6 Amp

SEE PAGE 6038 FOR PRODUCT SPECIFICATIONS

SPDT



MTA106DPC

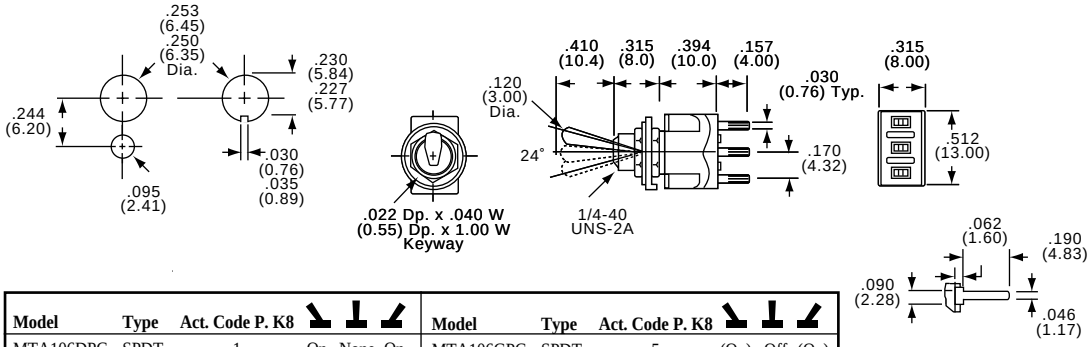

Model	Type	Act. Code P. K8	↘	⊥	↙
MTA106DPC	SPDT	1	On	None	On
MTA106EPC	SPDT	5	On	Off	On
MTA106FPC	SPDT	1	On	None	(On)

Model	Type	Act. Code P. K8	↘	⊥	↙
MTA106GPC	SPDT	5	(On)	Off	(On)
MTA106HPC	SPDT	5	On	Off	(On)

(On) indicates momentary position.

DPDT/SP3T



MTA206NPC

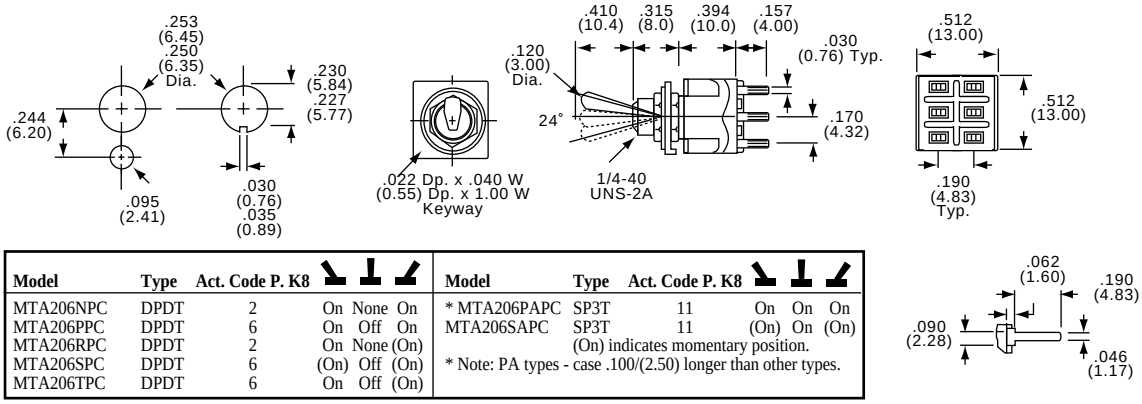

Model	Type	Act. Code P. K8	↘	⊥	↙
MTA206NPC	DPDT	2	On	None	On
MTA206PPC	DPDT	6	On	Off	On
MTA206RPC	DPDT	2	On	None	(On)
MTA206SPC	DPDT	6	(On)	Off	(On)
MTA206TPC	DPDT	6	On	Off	(On)

Model	Type	Act. Code P. K8	↘	⊥	↙
* MTA206PAPC	SP3T	11	On	On	On
MTA206SAPC	SP3T	11	(On)	On	(On)

(On) indicates momentary position.

* Note: PA types - case .100/(2.50) longer than other types.

3PDT



MTA306DPC

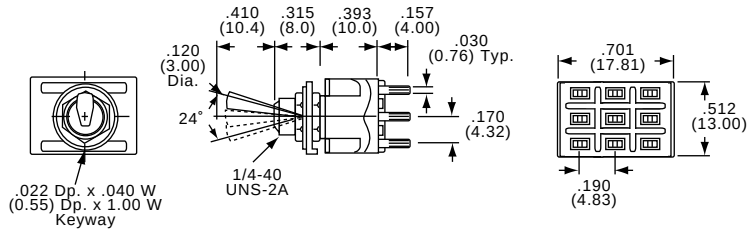

Model	Type	Act. Code P. K8	↘	⊥	↙
MTA306DPC	3PDT	3	On	None	On
MTA306EPC	3PDT	7	On	Off	On

Model	Type	Act. Code P. K8	↘	⊥	↙
MTA306FPC	3PDT	3	On	None	(On)
MTA306HPC	3PDT	7	On	Off	(On)

(On) indicates momentary position.

4PDT/DP3T



MTA406NPC

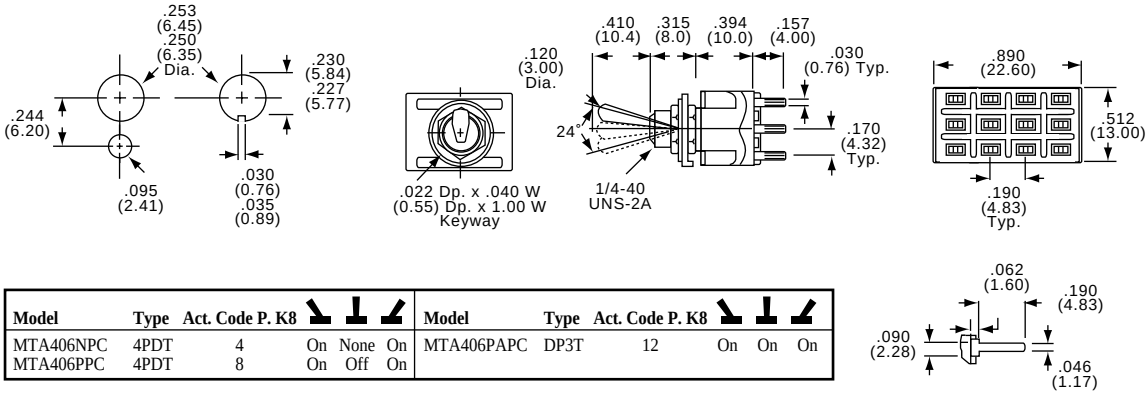

Model	Type	Act. Code P. K8	↘	⊥	↙
MTA406NPC	4PDT	4	On	None	On
MTA406PPC	4PDT	8	On	Off	On

Model	Type	Act. Code P. K8	↘	⊥	↙
MTA406PAPC	DP3T	12	On	On	On

GREEN SERIES

Toggle Switches, Short Mustang, 15/32 Bushing, Wire Lug, 6 Amp

SEE PAGE 6038 FOR PRODUCT SPECIFICATIONS

SPDT



MTG106D



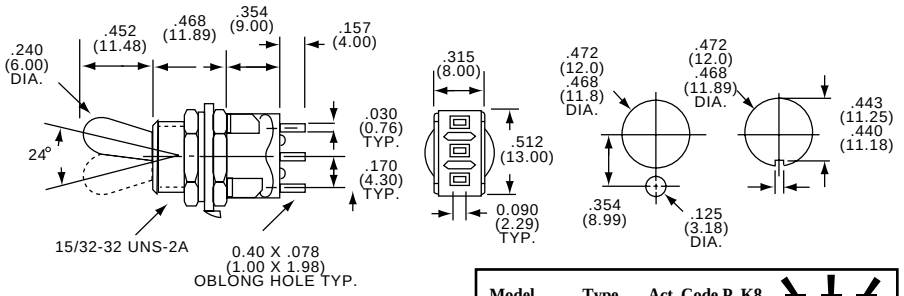

Model	Type	Act. Code P. K8			
MTG106D	SPDT	1	On	None	On
MTG106E	SPDT	5	On	Off	On
MTG106F	SPDT	1	On	None	(On)
MTG106G	SPDT	5	(On)	Off	(On)
MTG106H	SPDT	5	On	Off	(On)

(On) indicates momentary position.

DPDT/SP3T



MTG206N

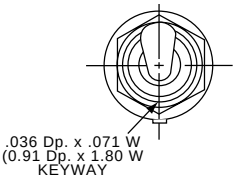

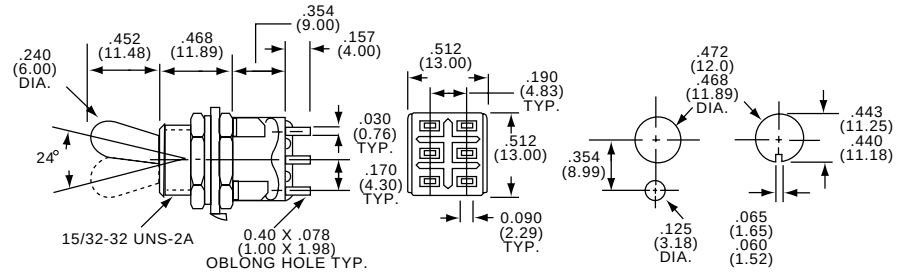

Model	Type	Act. Code P. K8			
MTG206N	DPDT	2	On	None	On
MTG206P	DPDT	6	On	Off	On
MTG206R	DPDT	2	On	None	(On)

(On) indicates momentary position.

Model	Type	Act. Code P. K8			
MTG206S	DPDT	2	(On)	Off	(On)
*MTG206T	DPDT	6	On	Off	(On)
*MTG206PA	SP3T	11	On	On	On

*Note: PA types have case .100/(2.50) longer than other types.

3PDT



MTG306D

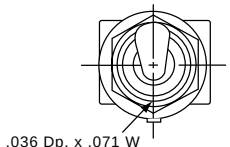

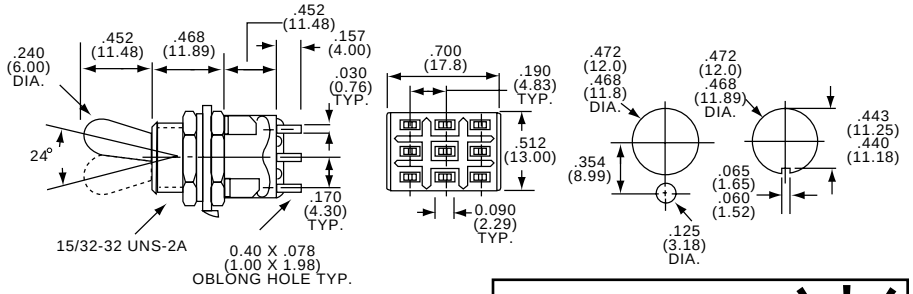

Model	Type	Act. Code P. K8			
MTG306D	3PDT	3	On	None	On
MTG306E	3PDT	7	On	Off	On

4PDT



MTG406N

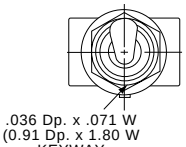

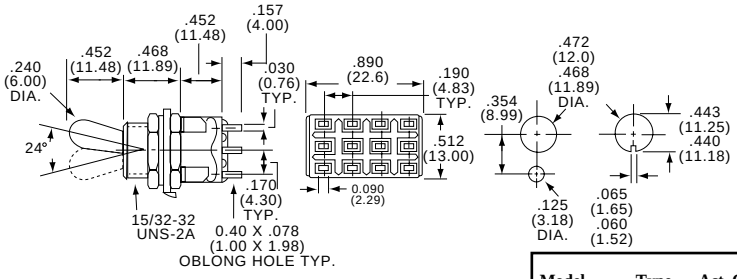

Model	Type	Act. Code P. K8			
MTG406N	4PDT	4	On	None	On
MTG406P	4PDT	8	On	Off	On

Products for Industrial & Commercial Applications

Dimensions are shown for reference purposes only.

Dimensions are in inches and millimeters unless otherwise specified. Values in brackets are metric equivalents.

Specifications subject to change.

Technical Support Center
1-800-522-6752
www.tycoelectronics.com

GREEN SERIES — Toggle Switches, Long Mustang, 15/32 Bushing, Wire Lug, 6 Amp

SEE PAGE 6038 FOR PRODUCT SPECIFICATIONS

SPDT



MTG126D

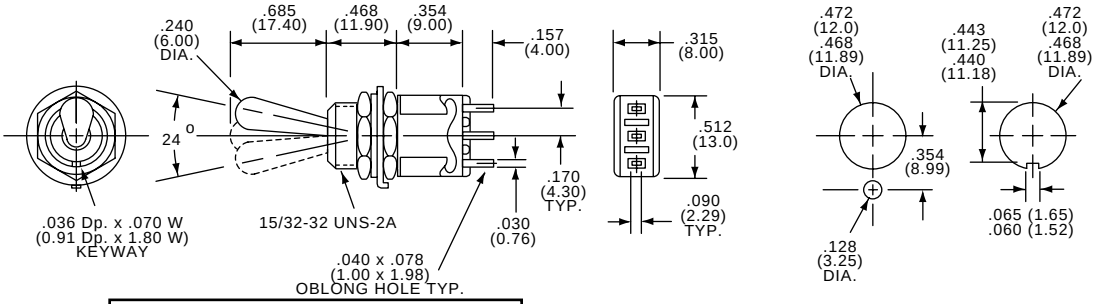

Model	Type	Act. Code P. K8	↘	⊥	↙
MTG126D	SPDT	1	On	None	On
MTG126E	SPDT	5	On	Off	On

DPDT/SP3T



MTG226N

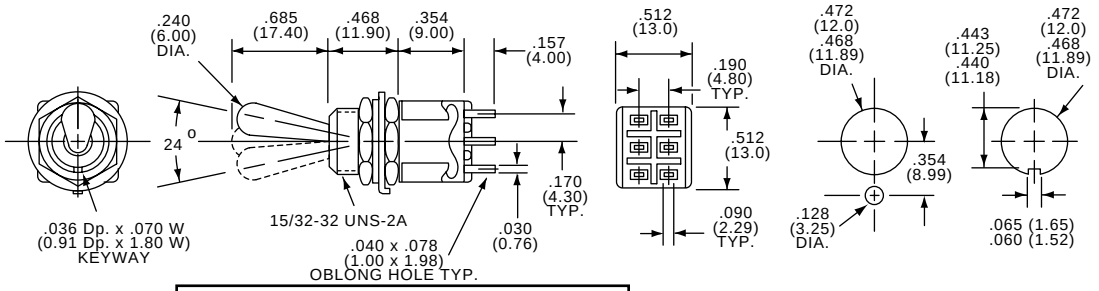

Model	Type	Act. Code P. K8	↘	⊥	↙
MTG226N	DPDT	2	On	None	On
MTG226P	DPDT	6	On	Off	On
*MTG226PA	SP3T	11	On	On	On

*Note: PA types have case .100/(2.50) longer than other types.

3PDT



MTG326D

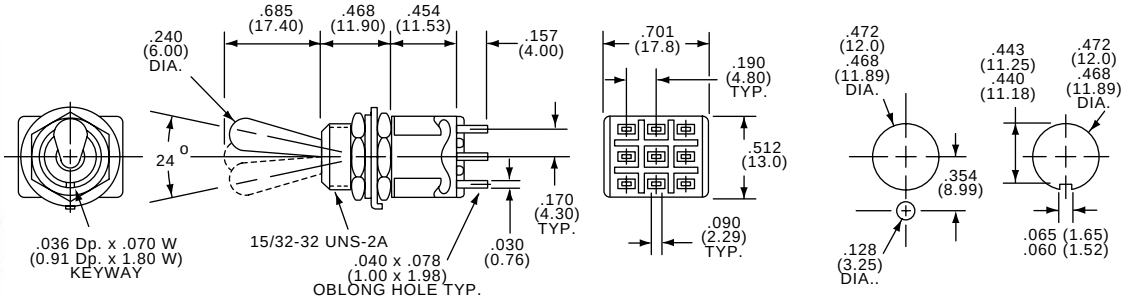

Model	Type	Act. Code P. K8	↘	⊥	↙
MTG326D	3PDT	3	On	None	On

4PDT



MTG426N

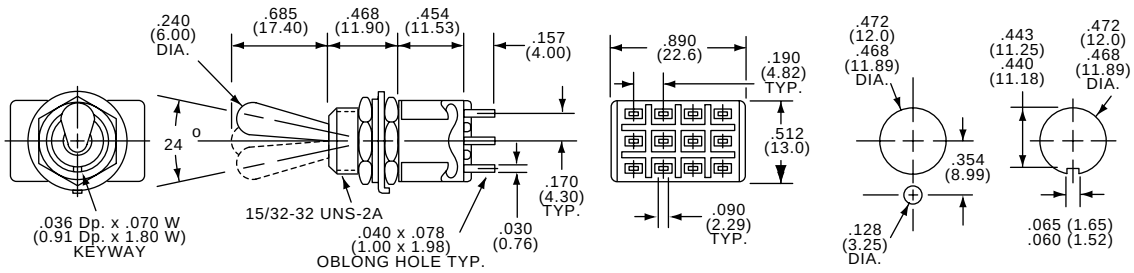

Model	Type	Act. Code P. K8	↘	⊥	↙
MTG426N	4PDT	4	On	None	On

Products for Industrial & Commercial Applications

Dimensions are shown for reference purposes only.

Dimensions are in inches and millimeters unless otherwise specified. Values in brackets are metric equivalents.

Specifications subject to change.

Technical Support Center
1-800-522-6752
www.tycoelectronics.com

GREEN SERIES

Toggle Switches, Miniature Locking, 1/4-40 Bushing, Wire Lug, 6 Amp

SEE PAGE 6038 FOR PRODUCT SPECIFICATIONS

SPDT



MTL106D

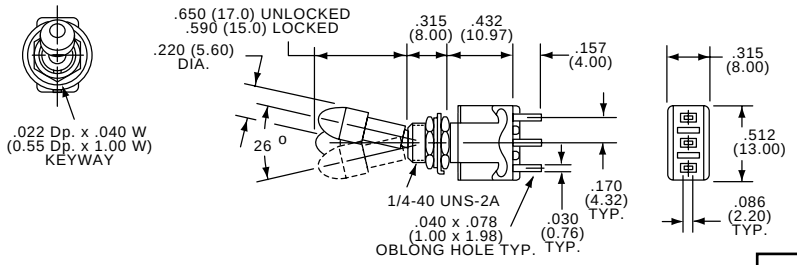

Model	Type	Act. Code P. K8	◣ ┻ ◢
MTL106D	SPDT	1	On None On
MTL106E	SPDT	5	On Off On

DPDT/SP3T



MTL206N

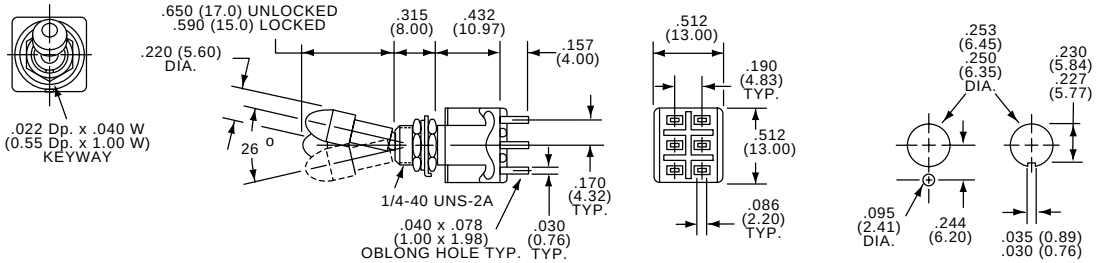

Model	Type	Act. Code P. K8	◣ ┻ ◢
MTL206N	DPDT	2	On None On
MTL206P	DPDT	6	On Off On
MTL206S	DPDT	6	(On) Off (On)
*MTL206PA	SP3T	11	On On On

(On) indicates momentary position.
*Note: PA types have case .100/(2.50) longer than other types.

3PDT



MTL306D

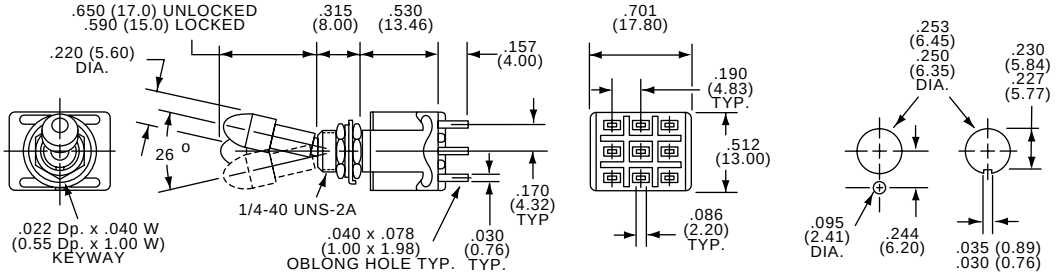

Model	Type	Act. Code P. K8	◣ ┻ ◢
MTL306D	3PDT	3	On None On

4PDT/DP3T



MTL406N

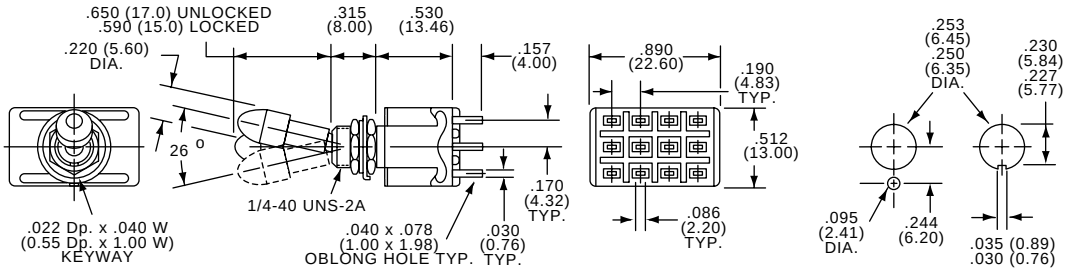

Model	Type	Act. Code P. K8	◣ ┻ ◢
MTL406N	4PDT	4	On None On
*MTL406PA	DP3T	12	On On On

*Note: PA types have case .100/(2.50) longer than other types.

For complete product information, order Catalog 1308390

Products for Industrial & Commercial Applications

Dimensions are shown for reference purposes only.

Dimensions are in inches and millimeters unless otherwise specified. Values in brackets are metric equivalents.

Specifications subject to change.

Technical Support Center
1-800-522-6752
www.tycoelectronics.com

GREEN SERIES

Toggle Switches, Short Toggle, PC Tail, 6 Amp

SEE PAGE 6038 FOR PRODUCT SPECIFICATIONS

SPDT



MTM106DPC

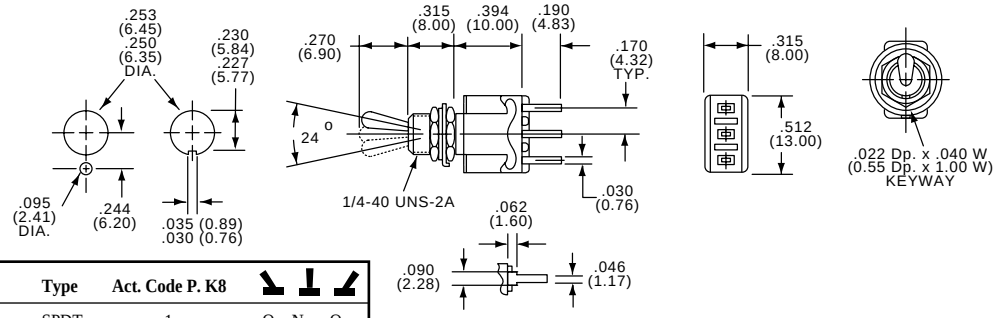

Model	Type	Act. Code P. K8	
MTM106DPC	SPDT	1	On None On
MTM106EPC	SPDT	5	On Off On
MTM106FPC	SPDT	1	On None(On)

(On) indicates momentary position.

DPDT/SP3T



MTM206NPC

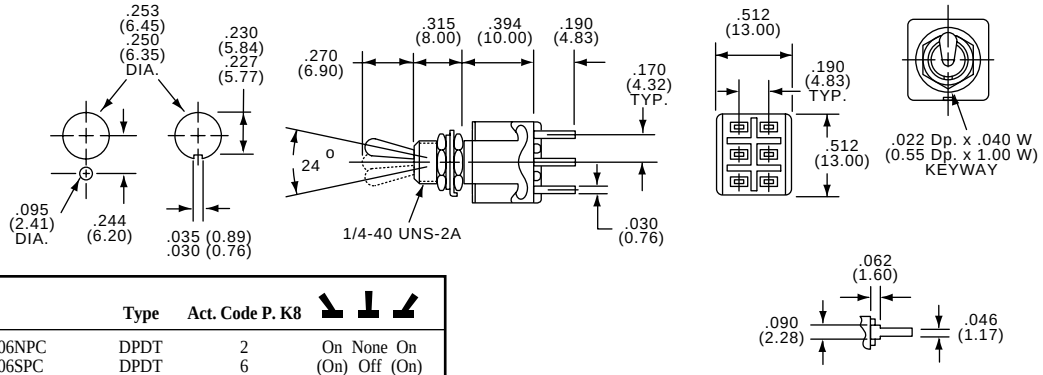

Model	Type	Act. Code P. K8	
MTM206NPC	DPDT	2	On None On
MTM206SPC	DPDT	6	(On) Off (On)
*MTM206PAPC	SP3T	11	On On On

(On) indicates momentary position.
.*Note: PA types have case .100/(2.50) longer than other types.

3PDT



MTM306DPC

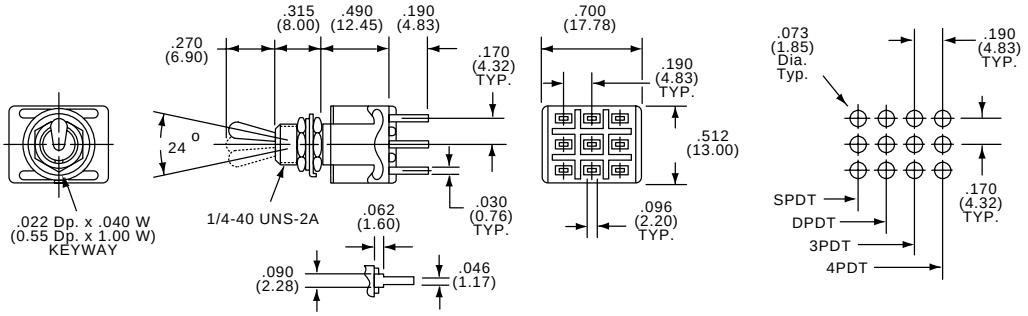

Model	Type	Act. Code P. K8	
MTM306DPC	3PDT	3	On None On

4PDT



MTM406NPC

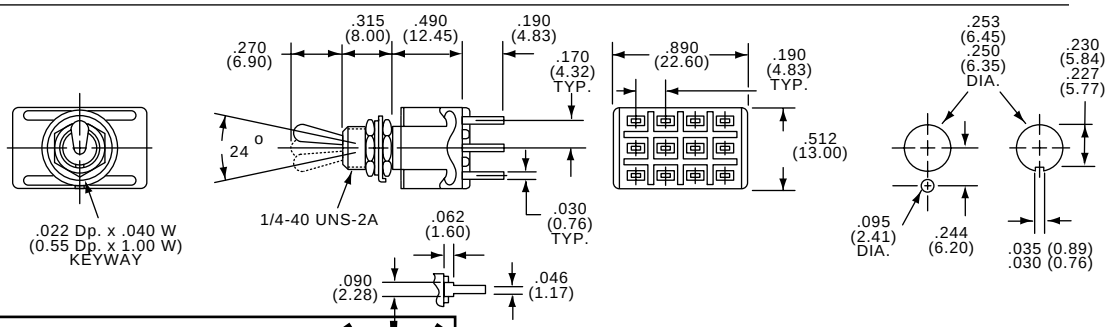

Model	Type	Act. Code P. K8	
MTM406NPC	4PDT	4	On None On

Products for Industrial & Commercial Applications

Dimensions are shown for reference purposes only.

Dimensions are in inches and millimeters unless otherwise specified. Values in brackets are metric equivalents.

Specifications subject to change.

Technical Support Center
1-800-522-6752
www.tycoelectronics.com

GREEN SERIES

Toggle Switches, Right Angle, Threaded or Unthreaded Bushing, 6 Amp

SPDT
Short Toggle



Horizontal Actuation

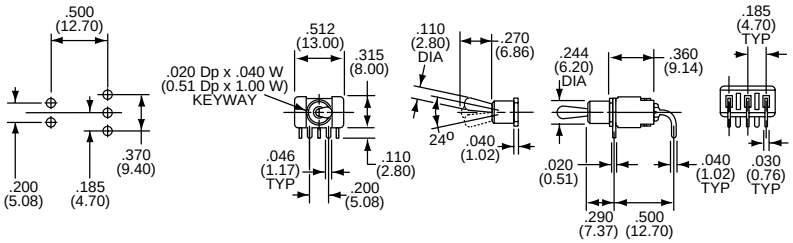

Model	Type	Act. Code P. K8	↘	⊥	↙	Toggle	Bushing
MTM8106DRA	SPDT	1	On	None	On	.270	.250
MTM8106ERA	SPDT	5	On	Off	On	.270	.250
MTM8106FRA	SPDT	1	(On)	None	On	.270	.250

(On) indicates momentary position.

DPDT
Short Toggle



Horizontal Actuation

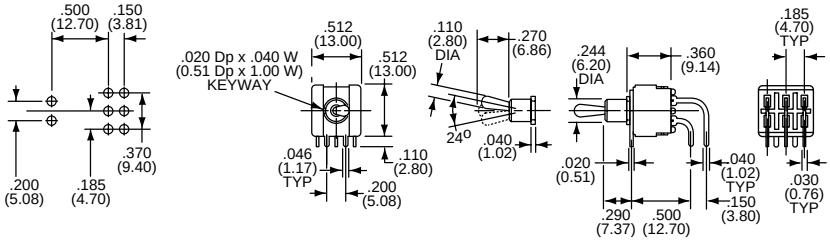

Model	Type	Act. Code P. K8	↘	⊥	↙	Toggle	Bushing
MTM8206NRA	DPDT	2	On	None	On	.270	.250
MTM8206PRA	DPDT	6	On	Off	On	.270	.250
MTM8206RRA	DPDT	2	(On)	None	On	.270	.250

(On) indicates momentary position.

SPDT
Standard Toggle



Horizontal Actuation

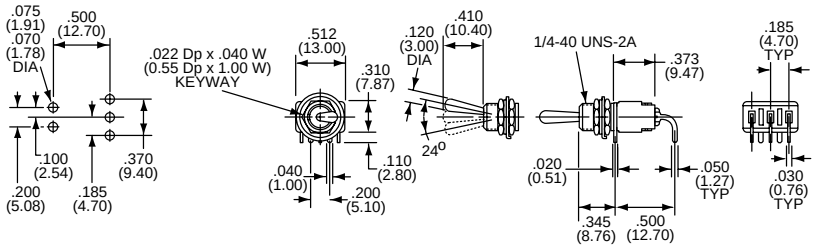

Model	Type	Act. Code P. K8	↘	⊥	↙	Toggle	Bushing
MTA8106DRA	SPDT	1	On	None	On	.410	1/4-40
MTA8106ERA	SPDT	5	On	Off	On	.410	1/4-40
MTA8106FRA	SPDT	1	(On)	None	On	.410	1/4-40

(On) indicates momentary position.

DPDT
Standard Toggle



Horizontal Actuation

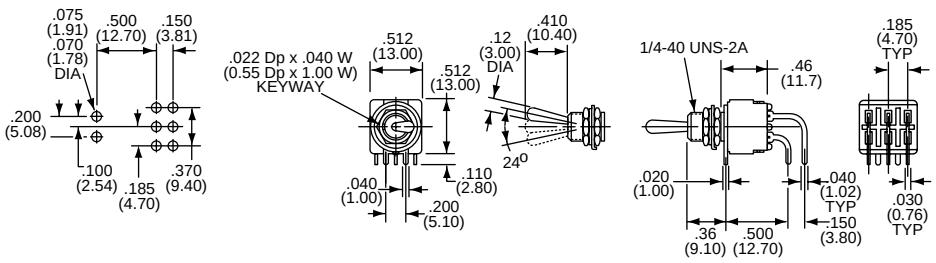

Model	Type	Act. Code P. K8	↘	⊥	↙	Toggle	Bushing
MTA8206NRA	DPDT	2	On	None	On	.410	1/4-40
MTA8206PRA	DPDT	6	On	Off	On	.410	1/4-40
MTA8206RRA	DPDT	2	(On)	None	On	.410	1/4-40

(On) indicates momentary position.

Horizontal Actuation

For complete product information, order Catalog 1308390

Products for Industrial & Commercial Applications

Dimensions are shown for reference purposes only.

Dimensions are in inches and millimeters unless otherwise specified. Values in brackets are metric equivalents.

Specifications subject to change.

Technical Support Center
1-800-522-6752
www.tycoelectronics.com

GREEN SERIES

Toggle Switches, Vertical Right Angle, Threaded or Unthreaded Bushing, 6 Amp

SPDT

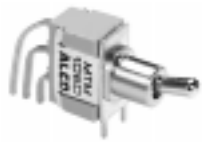

MTM8106DVRA
Vertical Actuation

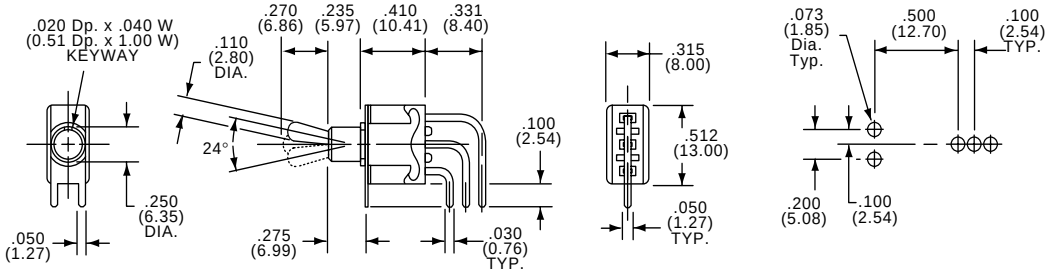

Model	Type	Act. Code P. K8	↘	⊥	↙	Short Toggle	Bushing
MTM8106DVRA	SPDT	1	On	None	On	.270	.250
MTM8106EVRA	SPDT	5	On	Off	On	.270	.250

DPDT



MTM8206NVRA
Vertical Actuation

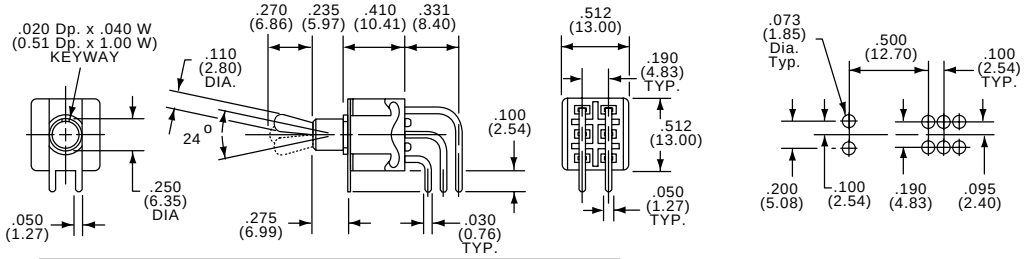

Model	Type	Act. Code P. K8	↘	⊥	↙	Short Toggle	Bushing
MTM8206NVRA	DPDT	1	On	None	On	.270	.250
MTM8206PVRA	DPDT	5	On	Off	On	.270	.250
MTM8206RVRA	DPDT	1	On	None	(On)	.270	.250

(On) indicates momentary position.

SPDT



MTA8106DVRA
Vertical Actuation

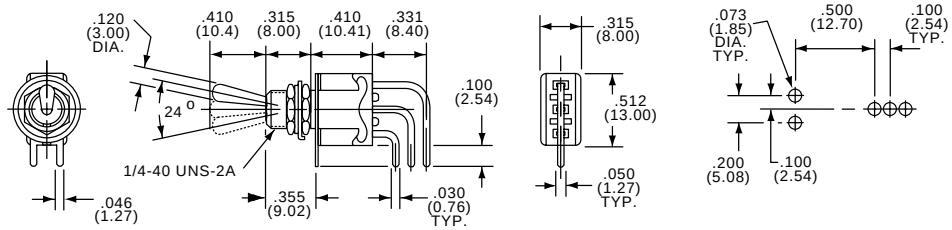

Model	Type	Act. Code P. K8	↘	⊥	↙	Long Toggle	Bushing
MTA8106DVRA	SPDT	1	On	None	On	.410	1/4-40
MTA8106EVRA	SPDT	5	On	Off	On	.410	1/4-40
MTA8106FVRA	SPDT	1	On	None	(On)	.410	1/4-40

(On) indicates momentary position.

DPDT



MTA8206NVRA
Vertical Actuation

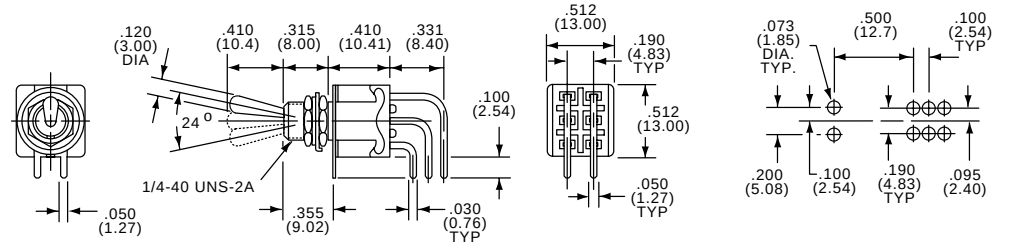

Model	Type	Act. Code P. K8	↘	⊥	↙	Long Toggle	Bushing
MTA8206NVRA	DPDT	1	On	None	On	.410	1/4-40
MTA8206PVRA	DPST	5	On	Off	On	.410	1/4-40

For complete product information, order Catalog 1308390

Products for Industrial & Commercial Applications

Dimensions are shown for reference purposes only.

Dimensions are in inches and millimeters unless otherwise specified. Values in brackets are metric equivalents.

Specifications subject to change.

Technical Support Center
1-800-522-6752
www.tycoelectronics.com

Tact Switches, 6 x 6mm, Through Hole

MATERIAL SPECIFICATIONS:

Contacts .....Copper alloy, silver plate
Case.....Polyamide
Actuator Button .....Polyacetal Resin
Frame .....Steel, tin plate
Terminals .....Copper alloy, silver plate

ENVIRONMENTAL SPECIFICATIONS

Operating Temperature.....-4°F to +158°F (-20°C to + 70°C)
Storage Temperature.....-22°F to +176°F (-30°C to +80°C)

TYPICAL PERFORMANCE CHARACTERISTICS:

Contact Rating .....50 mA @ 12 VDC
Initial Contact Resistance.....100 Milliohms max.
Insulation Resistance .....100 Megohms min. @ 100 VDC
Dielectric Strength .....250 VAC
Actuation Force .....160 Grams AVG (STD.)
Actuator Travel..... .012" (0,3)
Electrostatic Discharge
w/ESD Ground Terminal .....5Kv w/no discharge
Life Expectancy .....100,000 Cycles



FSM1J
WITH
ESD
TERMINAL

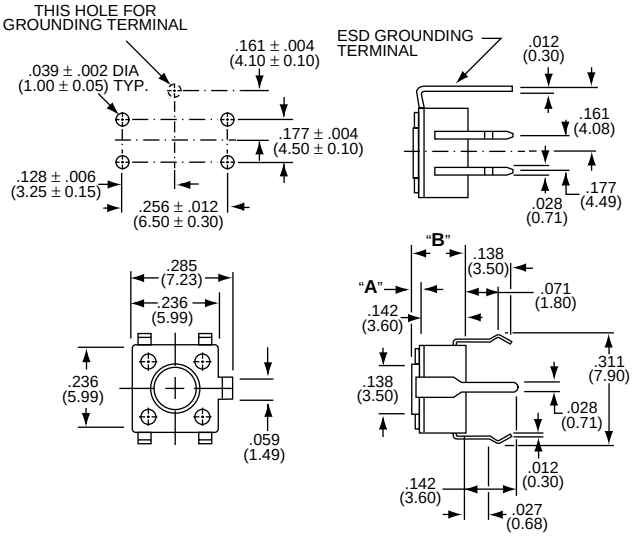

6 x 6 mm

Type		
SPST	Off	(On)

(On) indicates momentary position.

Part Number W/ESD Terminal	Dim. A	Dim B	Button Color
FSM1J	.028" (0,70)	.169" (4,30)	Black
FSM3J	.055" (1,40	.196" (5,00)	Black
FSM5J	.134" (3,40)	.276" (7,00)	Blue
FSM7J	.232" (5,90)	.374" (9,50)	Black
FSM9J	.146" (3,70)	.287" (7,30)	Ivory
FSM11J	.173" (4,40)	.315" (8,00)	White
FSM13J	.370" (9,40)	.512" (13,00)	Black
FSM15J	.527" (13,40)	.669" (17,00)	Black
FSM17J	.193" (4,90)	.335" (8,51)	Black



FSM2J
WITHOUT
ESD
TERMINAL

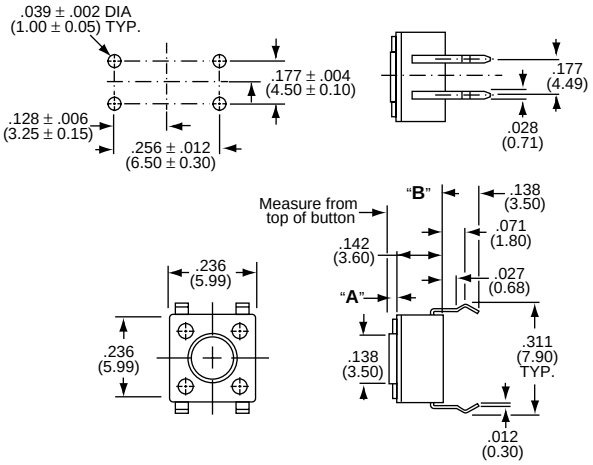

6 x 6 mm

Type		
SPST	Off	(On)

(On) indicates momentary position.

Part Number W/O ESD Terminal	Dim. A	Dim B	Button Color
FSM2J	.028" (0,70)	.169" (4,30)	Black
FSM4J	.055" (1,40	.196" (5,00)	Black
FSM6J	.134" (3,40)	.276" (7,00)	Blue
FSM8J	.232" (5,90)	.374" (9,50)	Black
FSM10J	.146" (3,70)	.287" (7,30)	Ivory
FSM12J	.173" (4,40)	.315" (8,00)	White
FSM14J	.370" (9,40)	.512" (13,00)	Black
FSM16J	.527" (13,40)	.669" (17,00)	Black
FSM18J	.193" (4,90)	.335" (8,51)	Black

PART NUMBERING SEQUENCE

Model	Actuator Length		Temp.	Actuator Force
FSM		J		
	SEE ABOVE		BLANK= STD. H= High TEMP. ACTUATOR OPT. 1-8 ONLY	BLANK= 160g STD. A = 260 g AA = 520 g L = 100 g

For complete product information, order Catalog 1308390

Products for Industrial & Commercial Applications

Dimensions are shown for reference purposes only.

Dimensions are in inches and millimeters unless otherwise specified. Values in brackets are metric equivalents.

Specifications subject to change.

Technical Support Center
1-800-522-6752
www.tycoelectronics.com

Tact Switches, 6 x 6mm, Right Angle

MATERIAL SPECIFICATIONS:

Contacts .....Copper alloy, silver plate
Case.....Polyamide
Actuator Button .....Polyacetal Resin
Frame .....Copper alloy, tin plate
Terminals .....Copper alloy, silver plate

ENVIRONMENTAL SPECIFICATIONS

Operating Temperature..... -4°F to +158°F (-20°C to + 70°C)
Storage Temperature.....-22°F to +176°F (-30°C to +80°C)

TYPICAL PERFORMANCE CHARACTERISTICS:

Contact Rating .....50 mA @ 12 VDC
Initial Contact Resistance.....100 Milliohms max.
Insulation Resistance .....100 Megohms min. @ 100 VDC
Dielectric Strength .....250 VAC
Actuation Force .....See Below
Actuator Travel..... .012" (0,3)
Life Expectancy .....100,000 Cycles



FSMRA7J

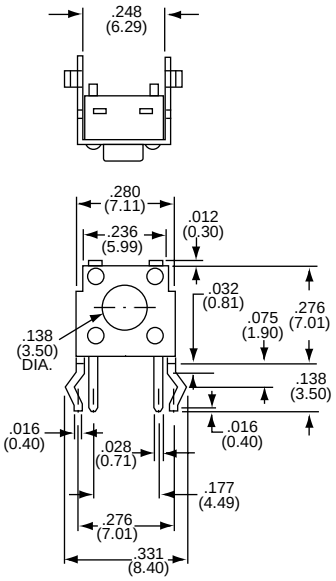

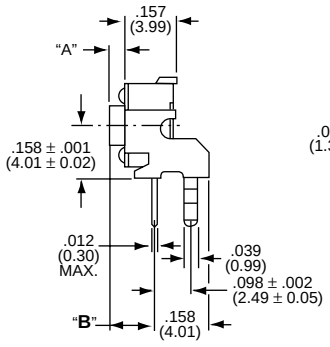

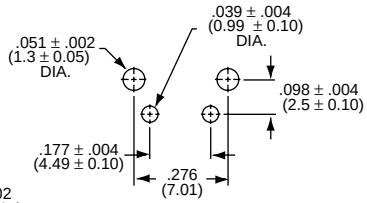

Part Number	Dim. A	Dim B	Button Color
FSMRA1J	.022" (0,55)	.124" (3,15)	Black
FSMRA2J	.049" (1,25)	.152" (3,86)	Black
FSMRA3J	.128" (3,25)	.230" (5,84)	Blue
FSMRA4J	.226" (5,74)	.329" (8,36)	Black
FSMRA5J	.140" (3,55)	.242" (6,15)	Ivory
FSMRA6J	.167" (4,25)	.269" (6,85)	White
FSMRA7J	.364" (9,25)	.467" (11,86)	Black

Type		
SPST	Off	(On)

(On) indicates momentary position.

PART NUMBERING SEQUENCE

Model	Actuator Length		Temperature	Actuation Force
FSMRA	☐	J	☐	☐

ACTUATOR LENGTH DIM "A" / SWITCH HEIGHT DIM "B"

.022" (0,56)	1	.124" (3,15)
.049" (1,24)	2	.152" (3,86)
.128" (3,25)	3	.230" (5,84)
.226" (5,74)	4	.329" (8,36)
.140" (3,55)	5	.242" (6,15)
.167" (4,24)	6	.269" (6,85)
.364" (9,24)	7	.467" (11,86)

BLANK = STD. TEMP.
H = HIGH TEMP.
(ACTUATOR OPTIONS 1 - 2)

BLANK = 160 g (STD.)
A = 260 g (OPT.)
AA = 520 g (OPT.)
L = 100 g (OPT.)

CONSULT FACTORY FOR OTHER OPTIONS

For complete product information, order Catalog 1308390

Products for Industrial & Commercial Applications

Dimensions are shown for reference purposes only.

Dimensions are in inches and millimeters unless otherwise specified. Values in brackets are metric equivalents.

Specifications subject to change.

Technical Support Center
1-800-522-6752
www.tycoelectronics.com

Tact Switches, 12 x 12mm, Flush or Extended Actuators

MATERIAL SPECIFICATIONS:

Contacts .....Copper alloy, silver plate
Case.....Polyester
Actuator Button .....Polyacetal Resin
Frame .....Polyamide
Terminals .....Copper alloy

ENVIRONMENTAL SPECIFICATIONS

Operating Temperature.....4°F to +158°F (-20°C to +70°C)
Storage Temperature.....-22°F to +176°F (-30°C to +80°C)

TYPICAL PERFORMANCE CHARACTERISTICS:

Contact Rating .....50 mA @ 12 VDC
Initial Contact Resistance.....100 Milliohms max.
Insulation Resistance .....100 Megohms min. @100 VDC
Dielectric Strength .....250 VAC
Actuation Force .....160 Grams AVG.
Actuator Travel..... .012"(0.3)
Life Expectancy .....100,000 cycles



FSM100

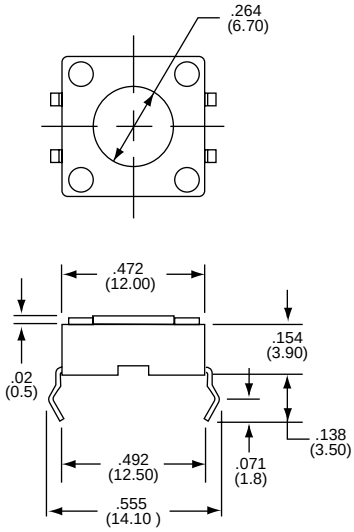

Model	Type		
FSM100	SPST	Off	(On)
	(On) indicates momentary position.		



FSM101

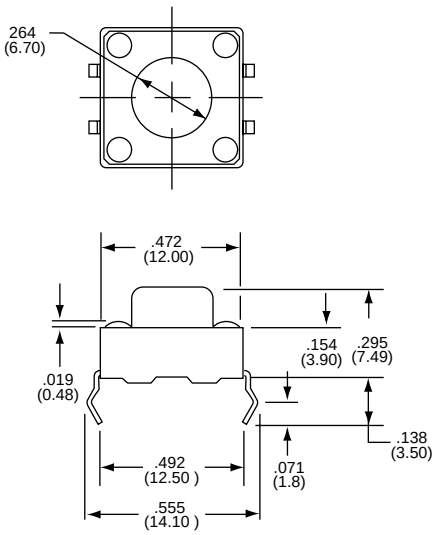

Model	Type		
FSM101	SPST	Off	(On)
	(On) indicates momentary position.		

For complete product information, order Catalog 1308390

Products for Industrial & Commercial Applications

Dimensions are shown for reference purposes only.

Dimensions are in inches and millimeters unless otherwise specified. Values in brackets are metric equivalents.

Specifications subject to change.

Technical Support Center
1-800-522-6752
www.tycoelectronics.com

TINY

Pushbutton Switches, Tiny, Vertical or Right Angle

*** Refer to Page 6056 for Additional Options ***

MATERIAL SPECIFICATIONS:

Contacts .....Gold - gold plate, silver - silver plate
Case Material .....High temperature polyester
Actuator Material .....Polyamide
Terminals/Fixed Contacts.....Tin lead plate
Terminal Seal .....SP epoxy, DP epoxy optional

ENVIRONMENTAL SPECIFICATIONS:

Operating Temperature.....-22°F to +149°F (-30°C to +65°C)
Storage Temperature.....-22°F to +149°F (-30°C to +65°C)

TYPICAL PERFORMANCE CHARACTERISTICS:

Contact Rating .....Gold: .4 VA max @ 20 VDC or peak AC
Silver: 1 Amp @ 125 VAC or 28 DC resistive
Initial Contact Resistance.....20 Milliohms max.
Contact Timing.....Break-before-make
Insulation Resistance .....1,000 Megohms @ 500VDC min.
Dielectric Strength .....1,000 Volts @ sea level
Actuation Force .....50 to 400 Grams
Plunger/Actuator Travel .....030" (.762)
Life Expectancy .....See page 6056

1 & 2 POLE



TPC23M

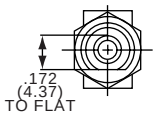

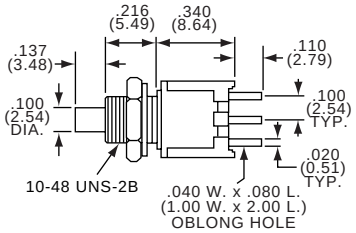

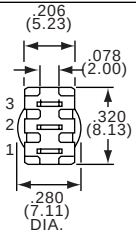

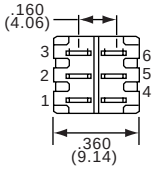

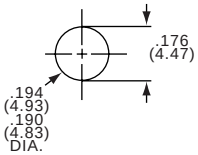



TPC13C

Model	Type	Act. Code P. K9	Action	Contact Type
TPC13C(*)	SPST	C	N.O. Momentary	Silver
TPC13F(*)	SPDT	F	Momentary	Silver
TPC23M(*)	DPST	M	N.O. Momentary	Silver
TPC23R(*)	DPDT	R	Momentary	Silver

(*) Specify button color by adding suffix number: (0) Black, (2) Red.
Note: No center terminal on "C" or "M" action switches.

1 & 2 POLE



TPF23M

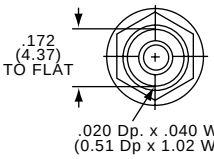

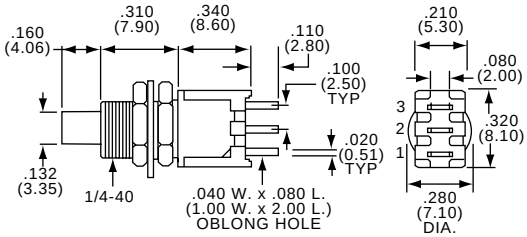

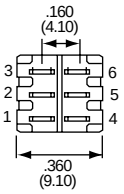

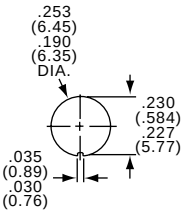



TPF13C

Model	Type	Act. Code P. K9	Action	Contact Type
TPF13C(*)	SPST	C	N.O. Momentary	Silver
TPF13F(*)	SPDT	F	Momentary	Silver
TPF23M(*)	DPST	M	N.O. Momentary	Silver
TPF23R(*)	DPDT	R	Momentary	Silver

(*) Specify button color by adding suffix number: (0) Black, (2) Red.
Note: No center terminal on "C" or "M" action switches.

TPB



TPB11FGVRA

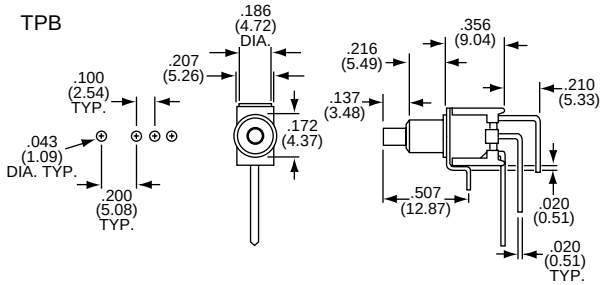

TPC

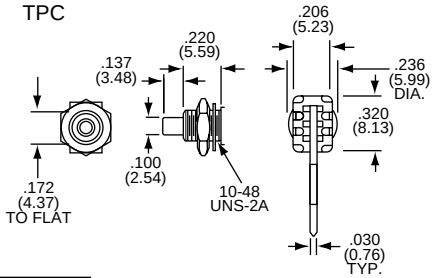

Model	Type	Act. Code P. K9	Action	Contact Type
TPB11CGVRA(*)	SPST	C	N.O. Momentary	Gold
TPB11FGVRA(*)	SPDT	F	Momentary	Gold
TPC11CGVRA(*)	SPST	C	N.O. Momentary	Gold
TPC11FGVRA(*)	SPDT	F	Momentary	Gold

(*) Specify button color by adding suffix number: (0) Black, (2) Red.
Note: No center terminal on "C" action switches.

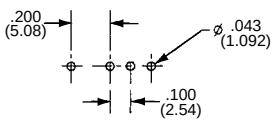

For complete product information, order Catalog 1308390

TINY

Pushbutton Switches, Tiny, Flush Actuator, Straight or Right Angle

*** Refer to Page 6056 for Additional Options ***

MATERIAL SPECIFICATIONS:

Contacts .....Gold over nickel barrier or silver
Case Material .....High temperature polyester
Actuator Material .....Polyamide
Terminals/Fixed Contacts.....Tin lead plate
Terminal Seal .....SP epoxy, DP epoxy optional

ENVIRONMENTAL SPECIFICATIONS:

Operating Temperature.....-22°F to +149°F (-30°C to +65°C)
Storage Temperature.....-22°F to +149°F (-30°C to +65°C)

TYPICAL PERFORMANCE CHARACTERISTICS:

Contact Rating .....Gold: 0.4 VA Max. @ 20 VDC or peak AC
Silver: 1A @ 125 VAC or 28 VDC resistive
Initial Contact Resistance.....20 Milliohms max.
Contact Timing.....Break-before-make
Insulation Resistance .....1,000 Megohms @ 500 VDC min.
Dielectric Strength .....1,000 Volts RMS @ sea level
Actuation Force .....50 to 400 Grams
Plunger/Actuator Travel .....030" (.762)
Life Expectancy .....See page 6056

SPST/SPDT

Wire Lugs 10-48 Bushing



TPCF13C

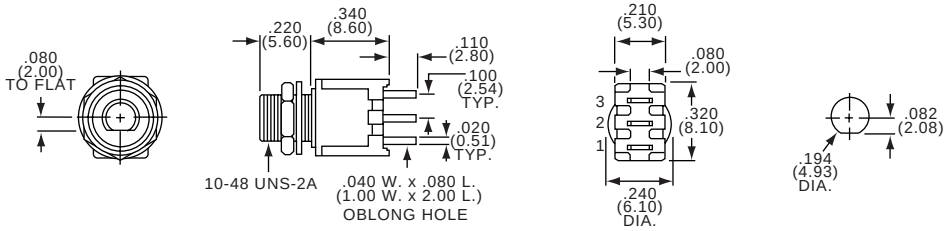

Model Silver Contacts	Type	Act. Code P. K9	Action	Bushing Type
TPCF13C(*)	SPST	C	N.O. Momentary	Threaded
TPCF13F(*)	SPDT	F	Momentary	Threaded

(*) Specify button color by adding suffix numbers: (0) Black, (2) Red.
Note: No center terminal on "C" action switch.

SPST/SPDT

PC 10-48 Bushing



TPBF11FGPC



TPCF11CGPC

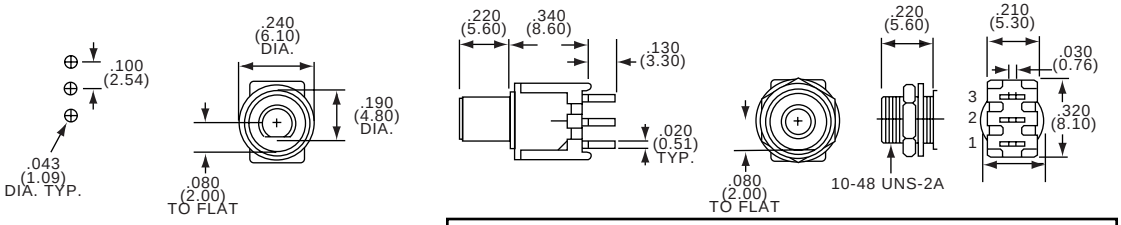

Model Gold Contacts	Type	Act. Code P. K9	Action	Bushing Type
TPBF11CGPC(*)	SPST	C	N.O. Momentary	Unthreaded
TPBF11FGPC(*)	SPDT	F	Momentary	Unthreaded
TPCF11CGPC(*)	SPST	C	N.O. Momentary	Threaded
TPCF11FGPC(*)	SPDT	F	Momentary	Threaded

(*) Specify button color by adding suffix numbers: (0) Black, (2) Red.
Note: No center terminal on "C" action switch.

SPST/SPDT

RA10-48 Bushing



TPBF11CGRA

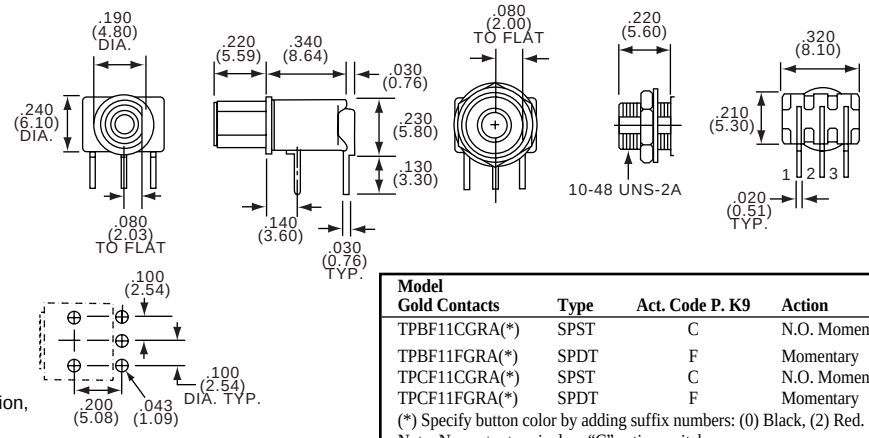

Model Gold Contacts	Type	Act. Code P. K9	Action	Bushing Type
TPBF11CGRA(*)	SPST	C	N.O. Momentary	Unthreaded
TPBF11FGRA(*)	SPDT	F	Momentary	Unthreaded
TPCF11CGRA(*)	SPST	C	N.O. Momentary	Threaded
TPCF11FGRA(*)	SPDT	F	Momentary	Threaded

(*) Specify button color by adding suffix numbers: (0) Black, (2) Red.
Note: No center terminal on "C" action switch.

For complete product information, order Catalog 1308390

Products for Industrial & Commercial Applications

Dimensions are shown for reference purposes only.

Dimensions are in inches and millimeters unless otherwise specified. Values in brackets are metric equivalents.

Specifications subject to change.

Technical Support Center
1-800-522-6752
www.tycoelectronics.com

Pushbutton Switches, Tiny, Single or Dual Actuators, Straight or Right Angle

MATERIAL SPECIFICATIONS:

Contacts .....Gold over nickel barrier
Case Material .....High temperature polyester
Actuator Material .....Polyamide
Terminals/Fixed Contacts.....Tin lead plate
Terminal Seal .....SP epoxy, DP epoxy optional

ENVIRONMENTAL SPECIFICATIONS:

Operating Temperature.....-22°F to +149°F (-30°C to +65°C)
Storage Temperature.....-22°F to +149°F (-30°C to +65°C)

TYPICAL PERFORMANCE CHARACTERISTICS:

Contact Rating .....0.4 VA Max. @ 20 VDC or peak AC
Initial Contact Resistance.....20 Milliohms max.
Contact Timing.....Break before make
Insulation Resistance .....1,000 Megohms @ 500 VDC min.
Dielectric Strength .....1,000 Volts RMS @ sea level
Actuation Force .....50 to 400 Grams
Plunger/Actuator Travel.....030" (.762)
Life Expectancy .....See page 6056

SPST/SPDT



TP11CGPC0



TPA11CGPC0

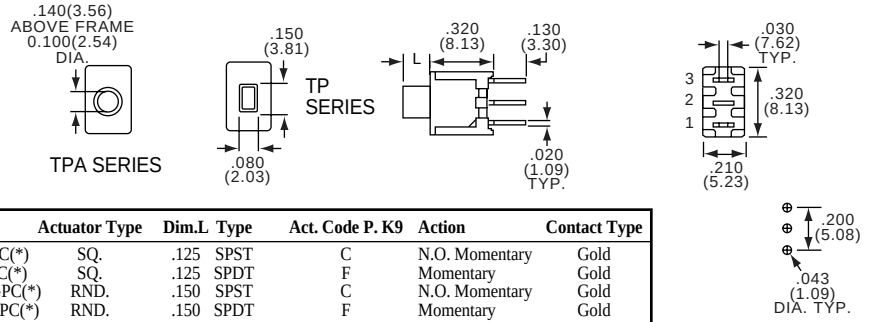

Model	Actuator Type	Dim.L	Type	Act. Code P. K9	Action	Contact Type
TP11CGPC(*)	SQ.	.125	SPST	C	N.O. Momentary	Gold
TP11FGPC(*)	SQ.	.125	SPDT	F	Momentary	Gold
TPA11CGPC(*)	RND.	.150	SPST	C	N.O. Momentary	Gold
TPA11FGPC(*)	RND.	.150	SPDT	F	Momentary	Gold

Note: No center terminal on "C" action switch.
(*) Specify button color by adding suffix number: (0) Black, (2) Red.

SPST/SPDT



TPA11CGRA



TP11CGRA

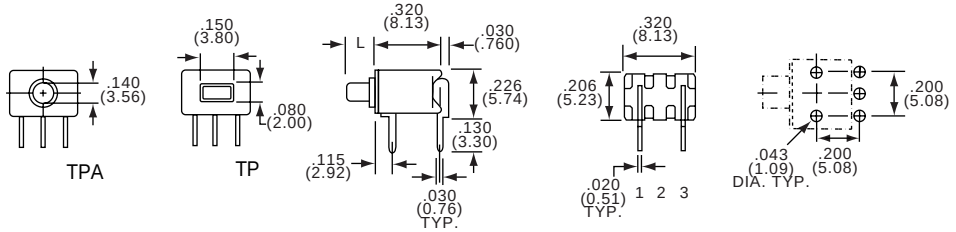

Model	Actuator Type	Dim.L	Type	Act. Code P. K9	Action	Contact Type
TP11CGRA(*)	SQ.	.125	SPST	C	N.O. Momentary	Gold
TP11FGRA(*)	SQ.	.125	SPDT	F	Momentary	Gold
TPA11CGRA(*)	RND.	.150	SPST	C	N.O. Momentary	Gold
TPA11FGRA(*)	RND.	.150	SPDT	F	Momentary	Gold

Note: No center terminal on "C" action switch.
(*) Specify button color by adding suffix number: (0) Black, (2) Red.

SPST/SPDT (DUAL)



TP21CCGPC0

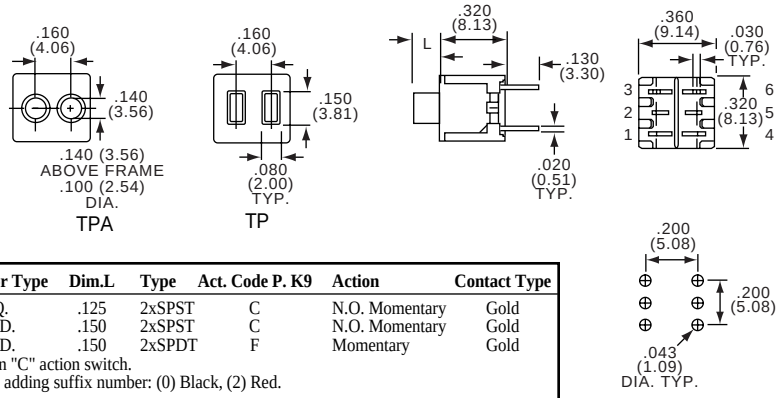

Model	Actuator Type	Dim.L	Type	Act. Code P. K9	Action	Contact Type
TP21CCGPC(*)	SQ.	.125	2xSPST	C	N.O. Momentary	Gold
TPA21CCGPC(*)	RND.	.150	2xSPST	C	N.O. Momentary	Gold
TPA21FFGPC(*)	RND.	.150	2xSPDT	F	Momentary	Gold

Note: No center terminal on "C" action switch.
(*) Specify button color by adding suffix number: (0) Black, (2) Red.

For complete product information, order Catalog 1308390

Products for Industrial & Commercial Applications

Dimensions are shown for reference purposes only.

Dimensions are in inches and millimeters unless otherwise specified. Values in brackets are metric equivalents.

Specifications subject to change.

Technical Support Center
1-800-522-6752
www.tycoelectronics.com

TINY

Pushbutton Switches, Tiny, Single or Dual Actuators, Right Angle

TP/TPA Series



TP21CCGRA0

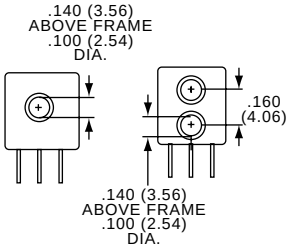

SEE PAGE 6051 FOR PRODUCT SPECIFICATIONS

SPST/SPDT (DUAL)
DPST

Model	Actuator Type	Dim.L	Type	Act. Code P. K9	Action	Contact Type
TP21CCGRA(*)	SQ.	.125	2xSPST	C	N.O. Momentary	Gold
TP21FFGRA(*)	SQ.	.125	2xSPDT	F	Momentary	Gold
TPA21MGRA(*)	RND.	.150	DPST	M	N.O. Momentary	Gold
TPA21CCGRA(*)	RND.	.150	2xSPST	C	N.O. Momentary	Gold
TPA21FFGRA(*)	RND.	.150	2xSPDT	F	Momentary	Gold

Note: No center terminal on "C" or "M" action switch.
(*) Specify button color by adding suffix number: (0) Black, (2) Red.

TPB/TPC Series

Pushbutton Switches, Tiny, Unthreaded or 10-48 Bushing, Straight

MATERIAL SPECIFICATIONS:
Contacts .....Gold over nickel barrier
Case Material .....High temperature polyester
Actuator Material .....Polyamide
Terminals/Fixed Contacts.....Tin lead plate
Terminal Seal .....SP epoxy, DP epoxy optional

ENVIRONMENTAL SPECIFICATIONS:
Operating Temperature.....-22°F to +149°F (-30°C to +65°C)
Storage Temperature.....-22°F to +149°F (-30°C to +65°C)

TYPICAL PERFORMANCE CHARACTERISTICS:
Contact Rating .....0.4 VA Max. @ 20 VDC or peak AC
Initial Contact Resistance.....20 Milliohms max.
Contact Timing.....Break-before-make
Insulation Resistance .....1,000 Megohms @ 500VDC min.
Dielectric Strength .....1,000 Volts RMS @ sea level
Actuation Force .....26 Kg.
Plunger/Actuator Travel.....030" (.762)
Life Expectancy .....See page 6056

SPST/SPDT



TPB11CGPC



TPC11FGPC

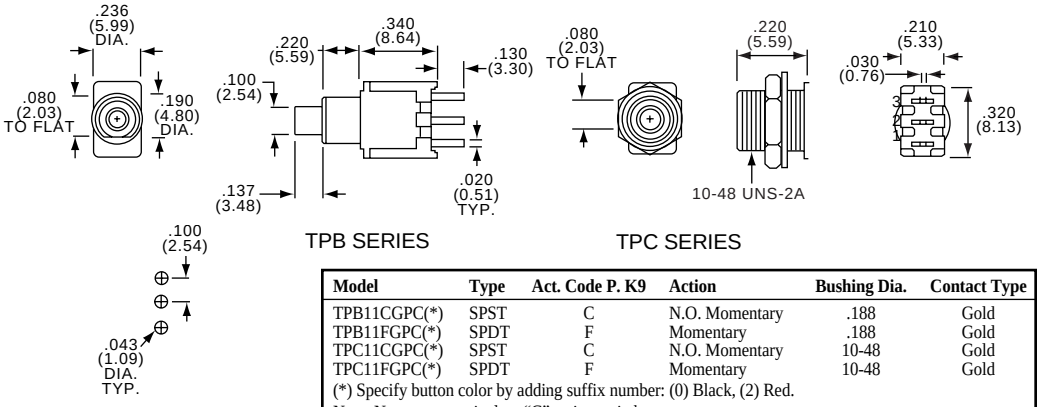

Model	Type	Act. Code P. K9	Action	Bushing Dia.	Contact Type
TPB11CGPC(*)	SPST	C	N.O. Momentary	.188	Gold
TPB11FGPC(*)	SPDT	F	Momentary	.188	Gold
TPC11CGPC(*)	SPST	C	N.O. Momentary	10-48	Gold
TPC11FGPC(*)	SPDT	F	Momentary	10-48	Gold

(*) Specify button color by adding suffix number: (0) Black, (2) Red.
Note: No center terminal on "C" action switch.

For complete product information, order Catalog 1308390

Products for Industrial & Commercial Applications
Dimensions are shown for reference purposes only.
Dimensions are in inches and millimeters unless otherwise specified. Values in brackets are metric equivalents.
Specifications subject to change.
Technical Support Center
1-800-522-6752
www.tycoelectronics.com

TINY

Pushbutton Switches, Tiny, Unthreaded or 10-48 Bushing, Straight or Right Angle

*** Refer to Page 6056 for Additional Options ***

SEE PAGE 6052 FOR PRODUCT SPECIFICATIONS

DPST/DPDT



TPB11CGRA

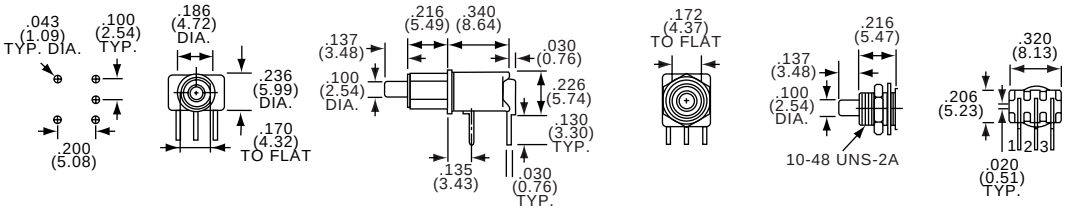

TPB SERIES

TPC SERIES



TPC11CGRA

Model	Type	Act. Code P. K9	Action	Bushing Dia.	Contact Type
TPB11CGRA(*)	SPST	C	N.O. Momentary	.188	Gold
TPB11FGRA(*)	SPDT	F	Momentary	.188	Gold
TPC11CGRA(*)	SPST	C	N.O. Momentary	10-48	Gold
TPC11FGRA(*)	SPDT	F	Momentary	10-48	Gold

(*) Specify button color by adding suffix number: (0) Black, (2) Red.
Note: No center terminal on "C" action switch.

DPST/DPDT



TPB21MGPC

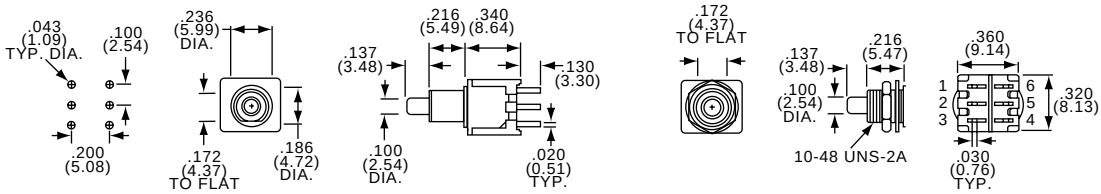

TPB SERIES

TPC SERIES



TPC21RGPC

Model	Type	Act. Code P. K9	Action	Bushing Dia.	Contact Type
TPB21MGPC(*)	DPST	M	N.O. Momentary	.188	Gold
TPB21RGPC(*)	DPDT	R	Momentary	.188	Gold
TPC21MGPC(*)	DPST	M	N.O. Momentary	10-48	Gold
TPC21RGPC(*)	DPDT	R	Momentary	10-48	Gold

(*) Specify button color by adding suffix number: (0) Black, (2) Red.
Note: No center terminal on "M" action switch.

DPST/DPDT



TPC21MGRA

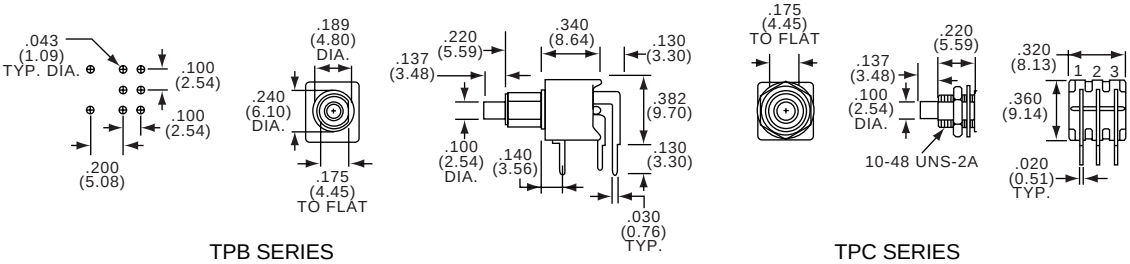

TPB SERIES

TPC SERIES

Model	Type	Act. Code. P. K9	Action	Bushing Dia.	Contact Type
TPB21MGRA(*)	DPST	M	N.O. Momentary	.188	Gold
TPB21RGRA(*)	DPDT	R	Momentary	.188	Gold
TPC21MGRA(*)	DPST	M	N.O. Momentary	10-48	Gold
TPC21RGRA(*)	DPDT	R	Momentary	10-48	Gold

(*) Specify button color by adding suffix number: (0) Black, (2) Red.
Note: No center terminal on"M" action switch.

For complete product information, order Catalog 1308390

Products for Industrial & Commercial Applications

Dimensions are shown for reference purposes only.

Dimensions are in inches and millimeters unless otherwise specified. Values in brackets are metric equivalents.

Specifications subject to change.

Technical Support Center
1-800-522-6752
www.tycoelectronics.com

TINY

Pushbutton Switches, Tiny, Unthreaded or 1/4-40 Bushing, Vertical

*** Refer to Page 6056 for Additional Options ***

MATERIAL SPECIFICATIONS:

Contacts .....Gold over nickel barrier
Case Material .....High temperature polyester
Actuator Material .....Polyamide
Terminals/Fixed Contacts.....Tin lead plate
Terminal Seal .....SP epoxy, DP epoxy optional

ENVIRONMENTAL SPECIFICATIONS:

Operating Temperature.....-22°F to +149°F (-30°C to +65°C)
Storage Temperature.....-22°F to +149°F (-30°C to +65°C)

TYPICAL PERFORMANCE CHARACTERISTICS:

Contact Rating .....0.4 VA Max. @ 20 VDC or peak AC
Initial Contact Resistance.....20 Milliohms max.
Contact Timing.....Break-before-make
Insulation Resistance .....1,000 Megohms @ 500 VDC min.
Dielectric Strength .....1,000 Volts RMS @ sea level
Actuation Force .....50 to 400 Grams
Plunger/Actuator Travel .....030" (.762)
Life Expectancy .....See page 6056

SPST/SPDT



TPD11CGPC

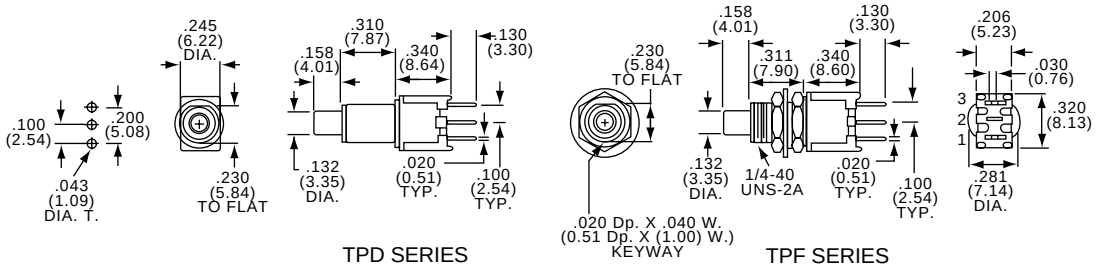

Model	Type	Act. Code P. K9	Action	Bushing Dia.	Contact Type
TPD11CGPC(*)	SPST	C	N.O. Momentary	.250	Gold
TPD11FGPC(*)	SPDT	F	Momentary	.250	Gold
TPF11CGPC(*)	SPST	C	N.O. Momentary	1/4-40	Gold
TPF11FGPC(*)	SPDT	F	Momentary	1/4-40	Gold

(*) Specify button color by adding suffix number: (0) Black, (2) Red, (6) Blue.
NOTE: No center terminal on "C" action swtch.

DPST/DPDT



TPD21MGPC

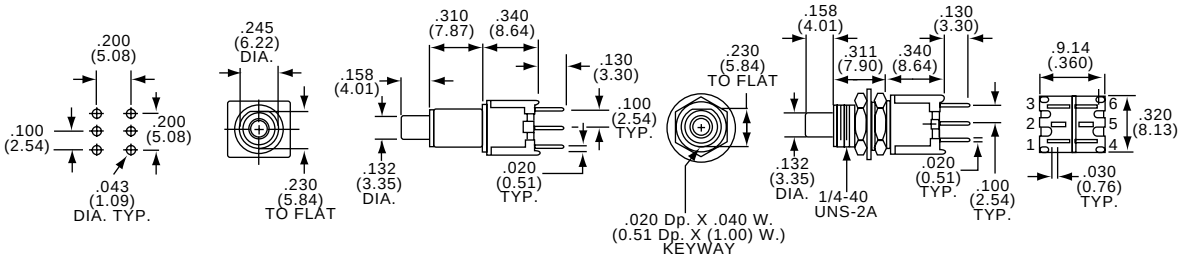

Model	Type	Act. Code P. K9	Action	Bushing Dia.	Contact Type
TPD21MGPC(*)	DPST	M	N.O. Momentary	.250	Gold
TPD21RGPC(*)	DPDT	R	Momentary	.250	Gold
TPF21MGPC(*)	DPST	M	N.O. Momentary	1/4-40	Gold
TPF21RGPC(*)	DPDT	R	Momentary	1/4-40	Gold

(*) Specify button color by adding suffix number: (0) Black, (2) Red, (6) Blue.

Note: No center terminals on "M" Action switches.

For complete product information, order Catalog 1308390

Products for Industrial & Commercial Applications

Dimensions are shown for reference purposes only.

Dimensions are in inches and millimeters unless otherwise specified. Values in brackets are metric equivalents.

Specifications subject to change.

Technical Support Center
1-800-522-6752
www.tycoelectronics.com

Pushbutton Switches, Tiny, Unthreaded or 1/4-40 Bushing, Right Angle

SPST/SPDT



TPD11CGRA



TPF11CGRA

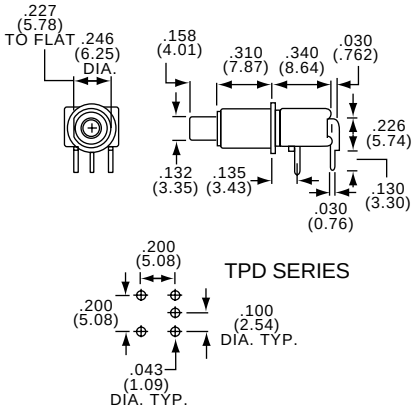

Model	Type	Act. Code P. K9	Action	Bushing Dia.	Contact Type
TPD11CGRA(*)	SPST	C	N.O. Momentary	.250	Gold
TPD11FGRA(*)	SPDT	F	Momentary	.250	Gold
TPF11CGRA(*)	SPDT	C	N.O. Momentary	1/4-40	Gold
TPF11FGRA(*)	SPDT	F	Momentary	1/4-40	Gold

(*) Specify button color by adding suffix number: (0) Black, (2) Red, (6) Blue.
Note: No center terminal on "C" action switch.

DPST/DPDT



TPF21MGRA



TPD21MGRA

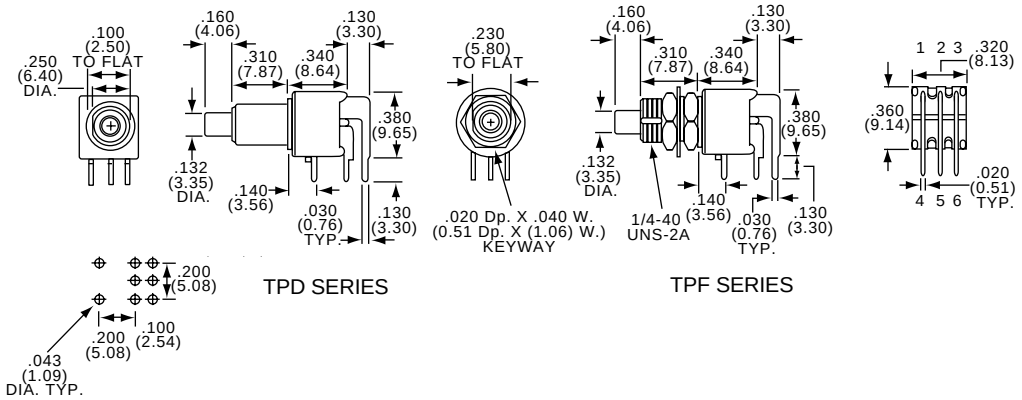

Model	Type	Act. Code P. K9	Action	Bushing Dia.	Contact Type
TPD21MFRA(*)	DPST	M	N.O. Momentary	.250	Gold
TPD21MGRA(*)	DPST	M	N.O. Momentary	.250	Gold
TPD21RGRA(*)	DPDT	R	Momentary	.250	Gold
TPF21MGRA(*)	DPST	M	N.O. Momentary	1/4-40	Gold
TPF21RGRA(*)	DPDT	R	Momentary	1/4-40	Gold

(*) Specify button color by adding suffix number: (0) Black, (2) Red, (6) Blue.

Note: No center terminal on "M" Action switches.

For complete product information, order Catalog 1308390

Products for Industrial & Commercial Applications
Dimensions are shown for reference purposes only.
Dimensions are in inches and millimeters unless otherwise specified. Values in brackets are metric equivalents.
Specifications subject to change.
Technical Support Center
1-800-522-6752
www.tycoelectronics.com

Pushbutton Switches, Tiny, Part Number Matrix

MATERIAL SPECIFICATIONS:

Contacts .....Gold - gold plate, silver - silver plate
Case Material .....High temperature polyester
Actuator Material .....Polyamide
Terminals/Fixed Contacts.....Tin lead plate
Terminal Seal .....SP epoxy, DP epoxy optional

ENVIRONMENTAL SPECIFICATIONS:

Operating Temperature.....-22°F to +149°F (-30°C to +65°C)
Storage Temperature.....-22°F to +149°F (-30°C to +65°C)

TYPICAL PERFORMANCE CHARACTERISTICS:

Initial Contact Resistance.....20 Milliohms max.
Contact Timing.....Break-before-make
Insulation Resistance .....1,000 Megohms @ 500VDC min.
Dielectric Strength .....1,000 Volts @ sea level
Actuation Force .....50 to 400 Grams
Plunger/Actuator Travel .....030" (.762)
Life Expectancy .....See below

PART NUMBERING MATRIX

Model	Bushing	Actuator	Poles	Rating	Function	Contacts	Terminations	Process Seal	Button Colors
TP									

Bushing:
Blank= Sq. No Bushing
A=Rnd. No Bushing
B=Rnd., .188" Bushing Dia. Unthreaded
C=Rnd., 10/48 Bushing Dia.
D=Rnd., .250" Bushing Dia. Unthreaded
F=Rnd., 1/4-40 Bushing Dia.

Actuator:
F = Flush Actuator*

Poles:
1 = Single
2 = Double

Rating:
1 = Gold 0.4 VA
3 = Silver** 1 Amp

Function:

SP	DP	
C	M	S.T. Momentary
F	R	D.T. Momentary

Contacts:
G = Gold
None = Silver**

Terminations:
Blank=Wire lug
PC=Printed Circuit
RA=Right Angle***
VRA=Vertical Right Angle****

Process Seal:
ES = Process Sealed***

Button Colors:
0=Black
2=Red

* Available with “B” and "C" bushing only
** Silver - available only in wire lug and PC termination with “B” and “C” bushing and flush actuator
*** Right angle, ES available with “B” and "C" bushing only
**** Available only in single pole

Application Note:

For 3 pole and 4 pole, refer to pages and 6058 . . . “MP Series”

TP Series Life Expectancy Chart

Pushbuttons	1 Pole	2 Pole
0.4 (Gold Plate)	100,000	80,000
1A (Silver Plate)	60,000	50,000

PROCESS SEAL VERSION NOT AVAILABLE



TP



TPA

PROCESS SEAL VERSION AVAILABLE

SERIES (TP)



TPB



TPC



TPD



TPF

For complete product information, order Catalog 1308390

Products for Industrial & Commercial Applications

Dimensions are shown for reference purposes only.

Dimensions are in inches and millimeters unless otherwise specified. Values in brackets are metric equivalents.

Specifications subject to change.

Technical Support Center
1-800-522-6752
www.tycoelectronics.com

Pushbutton Switches, Sub-Miniature, Panel Mount

MPA3 Series

MATERIAL SPECIFICATIONS:
Contacts .....Silver clad
Case Material .....Thermoset
Actuator Material .....Polyamide
Terminals .....Silver plate

ENVIRONMENTAL SPECIFICATIONS:
Operating Temperature.....-4°F to +158°F (-20°C to +70°C)
Storage Temperature.....-40°F to +176°F (-40°C to +80°C)

TYPICAL PERFORMANCE CHARACTERISTICS:
Contact Rating .....3 A @ 125 VAC
Initial Contact Resistance.....20 Milliohms max.
Contact Timing.....Break-before-make
Insulation Resistance .....1,000 Megohms min.
Dielectric Strength .....1,000 Volts RMS @ sea level
Actuation Force .....10 oz. SPST, 16 oz. SPDT average
Actuator Travel.....100" (2.54)
Life Expectancy .....10,000 Cycles

SPST/SPDT



MPA103C

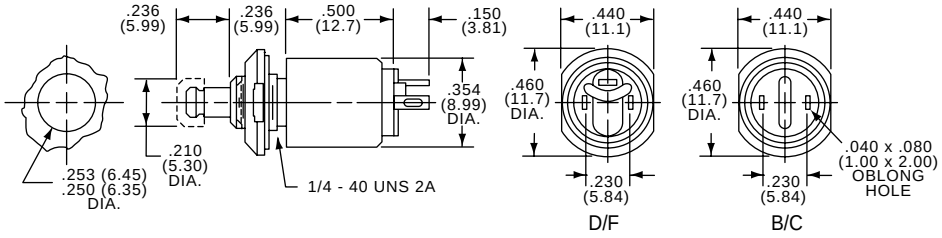

Model	Type	Act. Code P. K9	Action	Contact Rating
MPA103B	SPST	14	Normally closed, momentary	3 Amps
MPA103C	SPST	13	Normally open, momentary	3 Amps
MPA103D	SPDT	16	Push on/push off- (tactile)	3 Amps
MPA103F	SPDT	15	Momentary - (tactile)	3 Amps

Black Cap supplied. Other colors available, order separately.
(See Cap C5 and C8 on Page 6062.)

MPB Series

Pushbutton Switches, Miniature, Over-Travel

MATERIAL SPECIFICATIONS:
Contacts .....Silver plate
Case Material .....Thermoset
Actuator Material .....Polyamide
Terminals .....Silver plate

ENVIRONMENTAL SPECIFICATIONS:
Operating Temperature.....+14°F to +140°F (-10°C to +60°C)
Storage Temperature.....+5°F to +158°F (-15°C to +70°C)

TYPICAL PERFORMANCE CHARACTERISTICS:
Contact Rating .....3 A @ 125 VAC
Initial Contact Resistance.....20 Milliohms max.
Insulation Resistance .....1,000 Megohms min.
Dielectric Strength .....1,000 Volts RMS @ sea level
Actuator Travel.....100" (2.54) Overtravel .059" (1.5mm)
Life Expectancy .....20,000 Cycles

SPST



MPB103B

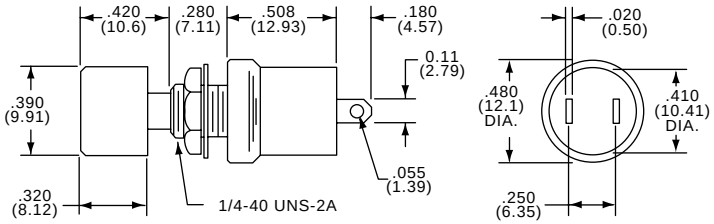

Model	Type	Act. Code P. K9	Action	Actuator Color
MPB103B	SPST	14	Normally Closed	Black
MPB103C	SPST	13	Normally Open	Red

For complete product information, order Catalog 1308390

Products for Industrial & Commercial Applications
Dimensions are shown for reference purposes only.
Dimensions are in inches and millimeters unless otherwise specified. Values in brackets are metric equivalents.
Specifications subject to change.
Technical Support Center
1-800-522-6752
www.tycoelectronics.com

Pushbutton Switches, 15/32 Bushing, Mustang, Wire Lug or PC Tails, 6 Amp

MATERIAL SPECIFICATIONS:

Contacts .....Silver clad copper with gold flash
Case Material .....Thermoset
Terminals .....Copper with gold flash finish
Terminal Seal .....Molded in

ENVIRONMENTAL SPECIFICATIONS:

Operating Temperature.....-4°F to +176°F (-20°C to +80°C)
Storage Temperature.....-40F to +176°F (-40°C to +80°C)

TYPICAL PERFORMANCE CHARACTERISTICS:

Contact Rating .....6 A @ 125 VAC, 3 A @ 250 VAC
Initial Contact Resistance.....10 Milliohms max.
Contact Timing.....Break-before-make
Insulation Resistance .....1,000 Megohms min.
Dielectric Strength .....1,500 Volts RMS @ sea level
Actuation Force .....1.3 to 2.7 lbs.
Actuator Travel.....138" (3.51)
Life Expectancy .....50,000 Actuations

SPDT

Black Cap supplied.



MPG106D

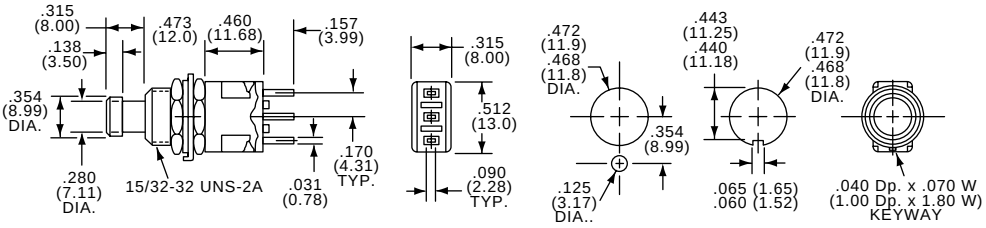

Model	Type	Act. Code P. K9	Action	Terminals
MPG106D	SPDT	23	Push on/Push off	Wire Lug
MPG106F	SPDT	19	Momentary	Wire Lug

Other Caps Available, order separately (See Cap Model C22 and C23 on page 6062.)

DPDT

Black Cap supplied.



MPG206NPC

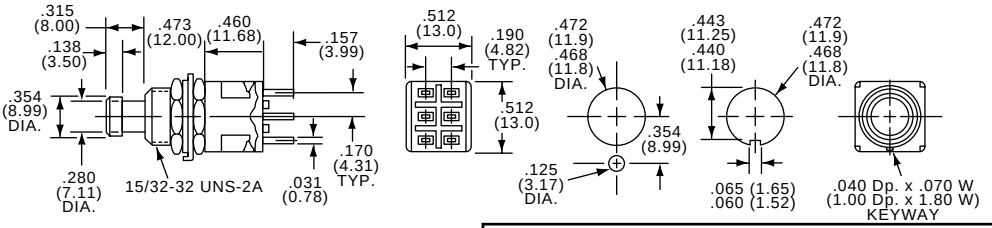

Model	Type	Act. Code P. K9	Action	Terminals
MPG206N	DPDT	24	Push on/Push off	Wire Lug
MPG206R	DPDT	20	Momentary	Wire Lug
MPG206NPC	DPDT	24	Push on/Push off	PC
MPG206RPC	DPDT	20	Momentary	PC

Other Caps Available, order separately (See Cap Model C22 and C23 on page 6062.)

3PDT

Black Cap supplied.



MPG306D

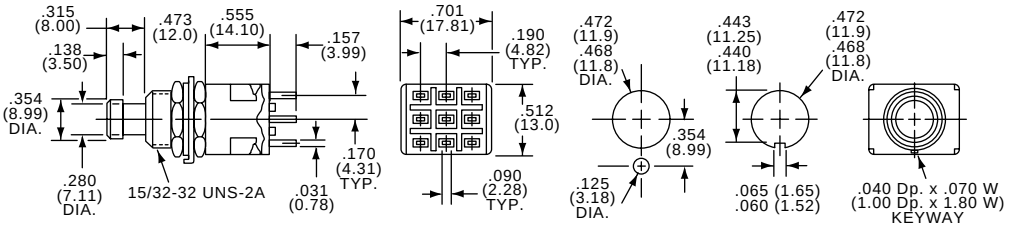

Model	Type	Act. Code P. K9	Action	Terminals
MPG306D	3PDT	25	Push on/Push off	Wire Lug
MPG306F	3PDT	21	Momentary	Wire Lug

Other Caps Available, order separately (See Cap Model C22 and C23 on page 6062.)

4PDT

Black Cap supplied.



MPG406N

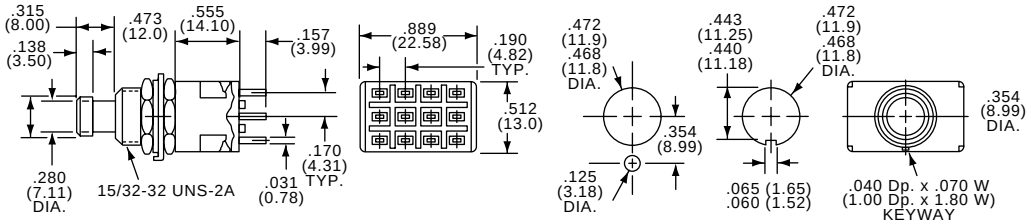

Model	Type	Act. Code P. K9	Action	Terminals
MPG406N	4PDT	26	Push on/Pushoff	Wire Lug
MPG406R	4PDT	22	Momentary	Wire Lug

Other Caps Available, order separately (See Cap Model C22 and C23 on page 6062.)

Products for Industrial & Commercial Applications

Dimensions are shown for reference purposes only.

Dimensions are in inches and millimeters unless otherwise specified. Values in brackets are metric equivalents.

Specifications subject to change.

Technical Support Center
1-800-522-6752
www.tycoelectronics.com

Pushbutton Switches, Snap Action, Wire Lug, 3 Amp

MATERIAL SPECIFICATIONS:

Contacts .....Silver
Case Material .....Epoxy resin
Actuator Material .....Copper alloy, nickel plate
Terminals .....Silver
Terminal Seal .....Epoxy

ENVIRONMENTAL SPECIFICATIONS:

Operating Temperature.....+5°F to +158°F (-15°C to +70°C)
Storage Temperature.....+5°F to +158°F (-15°C to +70°C)

TYPICAL PERFORMANCE CHARACTERISTICS:

Contact Rating .....3 A @ 115 VAC or 28 VDC
Initial Contact Resistance.....10 Milliohms max.
Contact Timing.....Break-before-make
Insulation Resistance .....1,000 Megohms @ 500 VDC min.
Dielectric Strength .....1,000 Volts RMS @ sea level
Actuation Force .....Single pole - 7 to 14 oz. (200 to 400 grams)
Double pole - 14 to 25 oz. (400 to 700 grams)
Actuator Travel.....Momentary .040" (1.02)
Push on/off .098" (2.49)
Life Expectancy .....50,000 Actuations

Notice: MPSN available with bi-color LED illumination.

SPDT/DPDT



MPS203R MPS103F

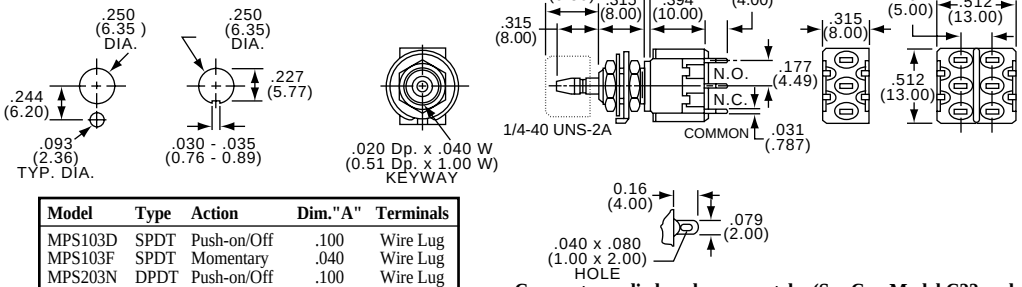

Model	Type	Action	Dim."A"	Terminals
MPS103D	SPDT	Push-on/Off	.100	Wire Lug
MPS103F	SPDT	Momentary	.040	Wire Lug
MPS203N	DPDT	Push-on/Off	.100	Wire Lug
MPS203R	DPDT	Momentary	.040	Wire Lug

Caps not supplied, order separately. (See Cap Model C22 and C23 on Page 6062.)

SPDT



MPSN103F

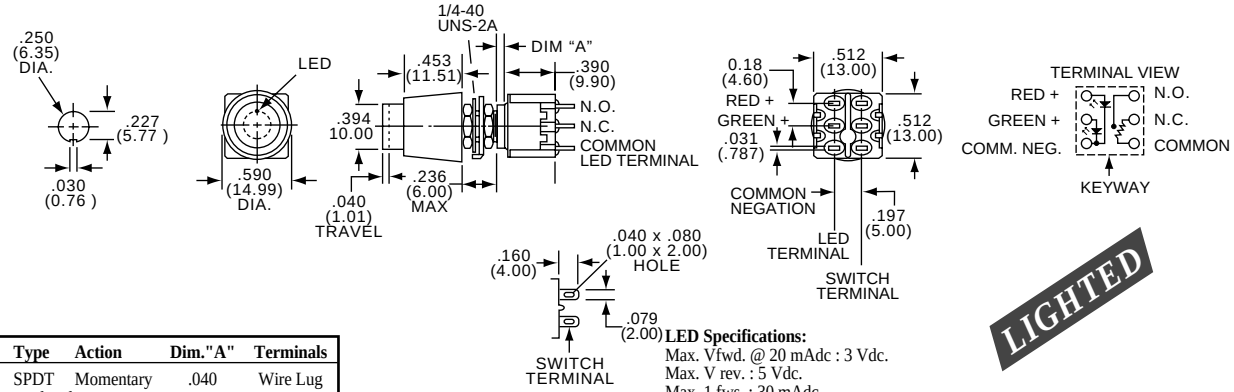

Model	Type	Action	Dim."A"	Terminals
MPSN103F	SPDT	Momentary	.040	Wire Lug

Note: LEDs are red and green.

LED Specifications:
Max. Vfwd. @ 20 mAdc : 3 Vdc.
Max. V rev. : 5 Vdc.
Max. I fws. : 30 mAdc.
Recommended series resistance: R = 120 ohm @ 5 Vdc. (add 50 ohms/volt above 5 volts)

LIGHTED

SPDT/DPDT



MPSR103F MPSR203R

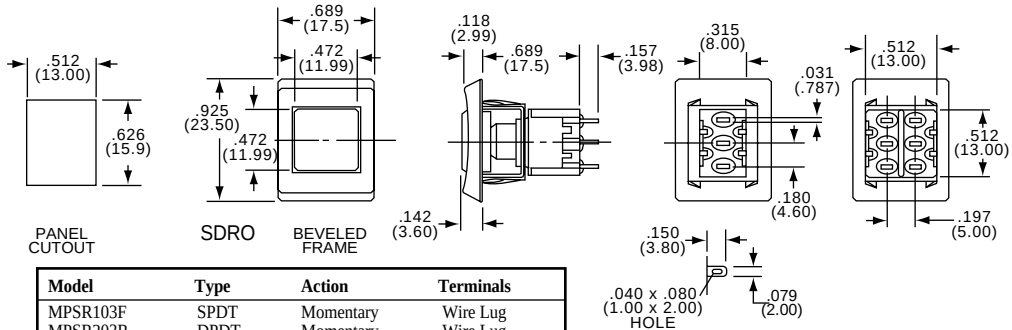

Model	Type	Action	Terminals
MPSR103F	SPDT	Momentary	Wire Lug
MPSR203R	DPDT	Momentary	Wire Lug
Model	**Description**		**Color**
SDRO	Plastic beveled frame		Black
C330-AG	Square button for MPSR		Black
C332	Square button "		Red
C339	Square button "		White

C-33(*) Button not supplied, Plastic (black) beveled edged frame Model SDRO, not supplied. ORDER SEPARATELY

Pushbutton Switches, Snap Action, PC or Wire Wrap Tails, 3 Amp

SEE PAGE 6059 FOR PRODUCT SPECIFICATIONS

SPDT/DPDT



MPS103FPC



MPS203RPC

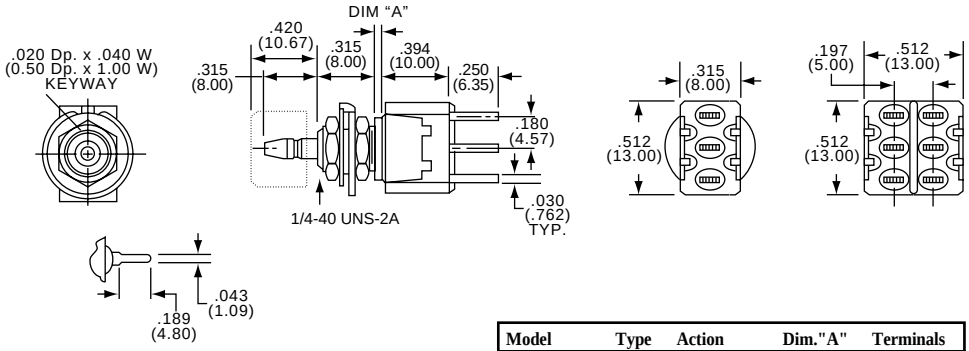

Model	Type	Action	Dim."A"	Terminals
MPS103DPC	SPDT	Push-on/Off	.100	PC Terminals
MPS103FPC	SPDT	Momentary	.040	PC Terminals
MPS203NPC	DPDT	Push-on/Off	.100	PC Terminals
MPS203RPC	DPDT	Momentary	.040	PC Terminals

Caps not supplied, order separately. (See Cap Model C22 and C23 on Page 6062.)

SPDT/DPDT



MPS103FPCV



MPS203RPCV

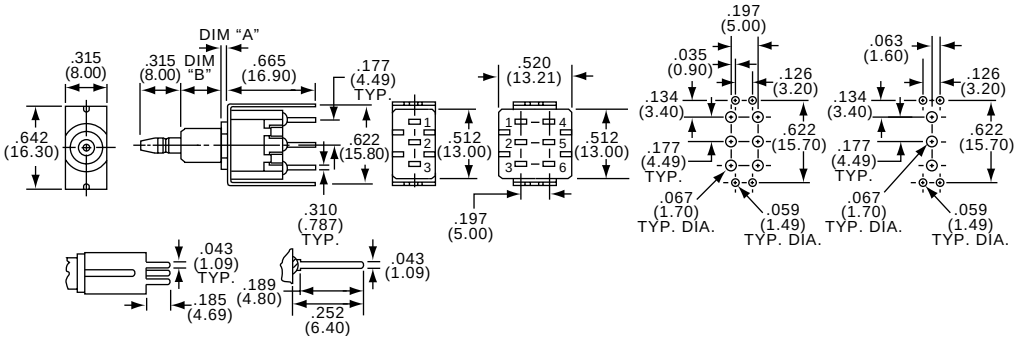

Model	Type	Action	Dim."A"	Dim."B"	Terminals
MPS103DPCV	SPDT	Push-on/Off	.080(2.03)	.315(8.00)	PC w/support
MPS103FPCV	SPDT	Momentary	.040(1.01)	.295(7.49)	PC w/support
MPS203RPCV	DPDT	Momentary	.040(1.01)	.295(7.49)	PC w/support

Caps not supplied, order separately. (See Cap Model C22 and C23 on Page 6062.)

SPDT/DPDT



MPS103FWW



MPS203RWW

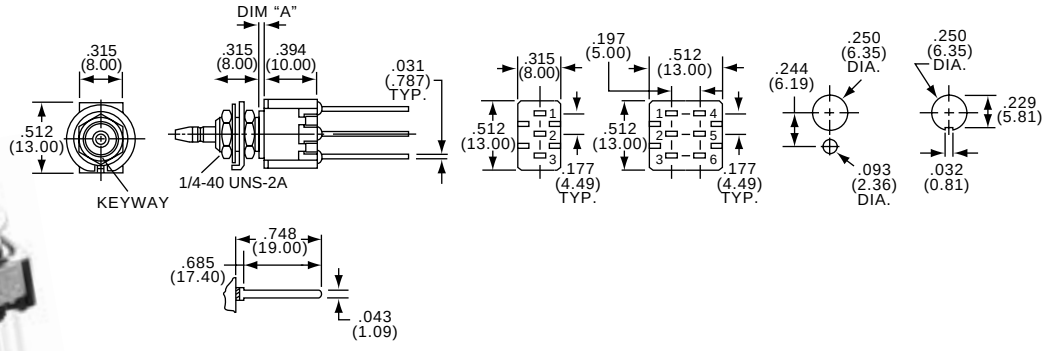

Model	Type	Action	Dim."A"	Terminals
MPS103FWW	SPDT	Momentary	.040(1.01)	Extended PC
MPS203NWW	DPDT	Push-on/Off	.100(2.54)	Extended PC
MPS203RWW	DPDT	Momentary	.040(1.01)	Extended PC

Caps not supplied, order separately. (See Cap Model C22 and C23 on Page 6062.)

For complete product information, order Catalog 1308390

Products for Industrial & Commercial Applications

Dimensions are shown for reference purposes only.

Dimensions are in inches and millimeters unless otherwise specified. Values in brackets are metric equivalents.

Specifications subject to change.

Technical Support Center
1-800-522-6752
www.tycoelectronics.com

Pushbutton Switches, Snap Action, Right Angle, 3 Amp

SPDT/DPDT



MPS103DRA



MPS203NRA

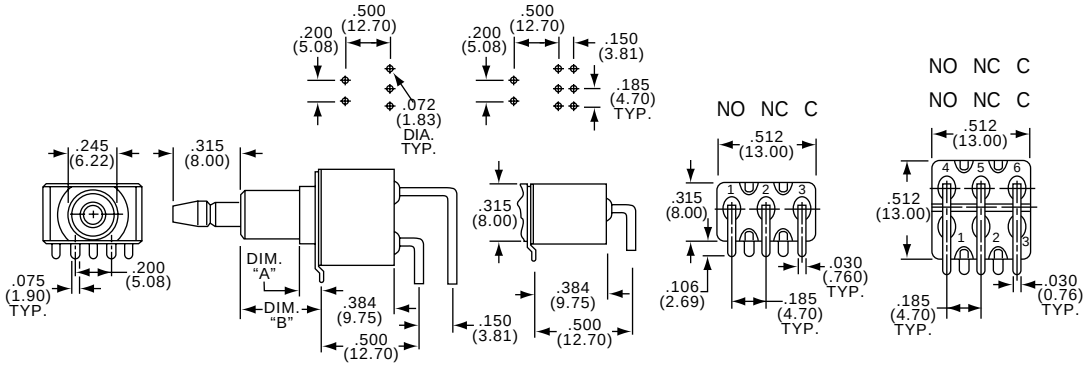

SEE PAGE 6028 FOR PRODUCT SPECIFICATIONS

Model	Type	Action	Dim."A"	Dim."B"	Terminals
MPS103DRA	SPDT	Push-on/Off	.100(2.54)	.423(10.7)	Right Angle PC
MPS103FRA	SPDT	Momentary	.060(1.52)	.364(9.24)	Right Angle PC
MPS203NRA	DPDT	Push-on/Off	.100(2.54)	.423(10.7)	Right Angle PC
MPS203RRA	DPDT	Momentary	.060(1.52)	.364(9.24)	Right Angle PC

Caps not supplied, order separately.
(See Cap Model C22 and C23 on Page 6062.)

MSP3/MSPS

Pushbutton Switches, 2.5mm Travel, Panel Mount

MATERIAL SPECIFICATIONS:

Contacts .....Silver plate over copper alloy
Case Material .....Thermoplastic
Actuator Material .....Thermoplastic
Terminals .....Silver plate

ENVIRONMENTAL SPECIFICATIONS:

Operating Temperature.....-4°F to +176°F (-20°C to +80°C)
Storage Temperature.....+5°F to +153°F (-15°C to +75°C)

TYPICAL PERFORMANCE CHARACTERISTICS:

Contact Rating .....MSP103 - 3 Amps @ 125 VAC (with over travel) .059" (1.5mm)
MSPS103 - 0.5 Amps @ 125 VAC (Butt contact)
Initial Contact Resistance.....100 Milliohms
Contact Timing.....Break-before-make
Insulation Resistance .....1,000 Megohms min.
Dielectric Strength .....1,000 Volts RMS @ sea level
Life Expectancy .....10,000 Cycles
Travel .....2.5 mm

SPST



MSP103B

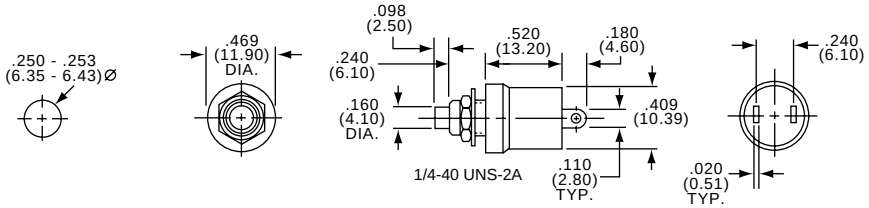

3 AMPS

Model	Type	Act. Code P. K9	Momentary Action	Bushing Length	Actuator Color
MSP103B	SPST	14	Normally Closed	.236	Black
MSP103C	SPST	13	Normally Open	.236	Red
MSP103CO	SPST	13	Normally Open	.236	Black
MSP103C2	SPST	13	Normally Open	.374	Red



MSPS103B

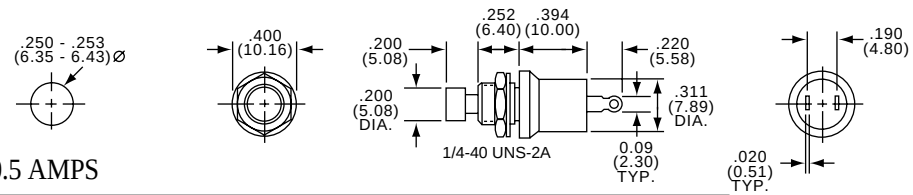

0.5 AMPS

Model	Type	Act. Code P. K9	Momentary Action	Bushing Length	Actuator Color
MSPS103B	SPST	14	Normally Closed	.245	Black
MSPS103C	SPST	13	Normally Open	.245	Red
MSPS103C0	SPST	13	Normally Open	.245	Black

For complete product information, order Catalog 1308390

Products for Industrial & Commercial Applications
Dimensions are shown for reference purposes only.
Dimensions are in inches and millimeters unless otherwise specified. Values in brackets are metric equivalents.
Specifications subject to change.
Technical Support Center 1-800-522-6752 www.tycoelectronics.com

Pushbutton Switches, Accessories

CAPS



C12 C13 C14 C14L C5 C22

Model	ID.	Description	Use Guard	Color	"A" Diameter	B Height
C5(*)	Snapfit	Small plastic cap for MPA3 Series	-	(0), (2), (5), (9)	.195	.120
C8(*)	Snapfit	Large plastic cap for MPA3 Series	-	(0), (2), (5), (9)	.310	.160
C9(*)	Snapfit	Spare color cap for MPG Series	-	(0), (2), (4), (6), (9), (12)	.354	.138
C12(*)	Threaded**	Small plastic cap	G12	(0), (2), (5)	.392	.317
C13(*)	Threaded**	Large plastic cap	G13	(0), (2), (5)	.587	.390
C14(*)	Threaded**	Small metal cap	-	Chrome only	.177	.283
C14L(*)	Threaded**	Large metal cap	-	Chrome only	.313	.315
C22(*)	Snapfit	MPS/MSPM/MPE/MPA6	G12	(0), (2), (3), (4), (5), (6),(9)	.394	.315
C23(*)	Snapfit	MPS/MSPM/MPE/MPA6	G13	(0), (2), (3), (4), (5), (6), (9)	.590	.394
C33(*)	Snapfit	Square button for MPSR	-	(0), (2), (6), (9)	.378SQ.	.201

(*) Specify color by adding suffix number: (0) Black, (2) Red, (3) Orange, (4) Yellow, (5) Green, (6) Blue, (9) White, (12) Pink.

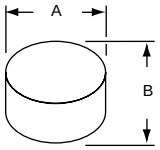

**Threaded 3-56 UNF-2B

GUARDS

Model	Type	Color	Finish	Can be Used with Cap	
G11A	10-48	Clear aluminum	Plain	C22	—
G11B	10-48	Black aluminum	Plain	C22	—
G11C	10-48	Chromed Brass	Plain	C22	—
G12A	1/4-40	Clear aluminum	Plain	C12	C22
G12B	1/4-40	Black aluminum	Plain	C12	C22
G12C	1/4-40	Chromed brass	Plain	C12	C22
G12KA	1/4-40	Clear aluminum	Knurled	C12	C22
G12KB	1/4-40	Black aluminum	Knurled	C12	C22
G12KC	1/4-40	Chromed brass	Knurled	C12	C22
G13A	1/4-40	Clear aluminum	Plain	C13	C23
G13B	1/4-40	Black aluminum	Plain	C13	C23
G13C	1/4-40	Chromed brass	Plain	C13	C23
G13KA	1/4-40	Clear aluminum	Knurled	C13	C23
G13KB	1/4-40	Black aluminum	Knurled	C13	C23
G13KC	1/4-40	Chromed brass	Knurled	C13	C23
Model	**Type**	**Color**	**Finish**		
G15*	15/32"	Clear aluminum	Plain		

*G15 Model used on the MSPF Series

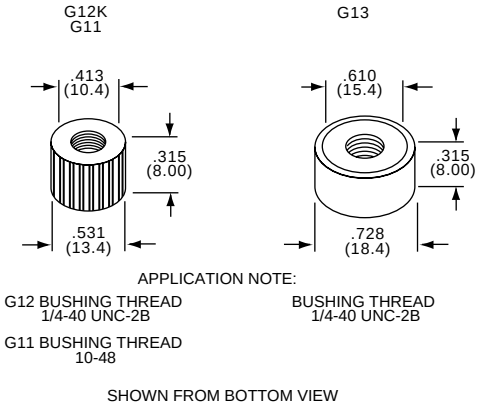



DECORATIVE HARDWARE

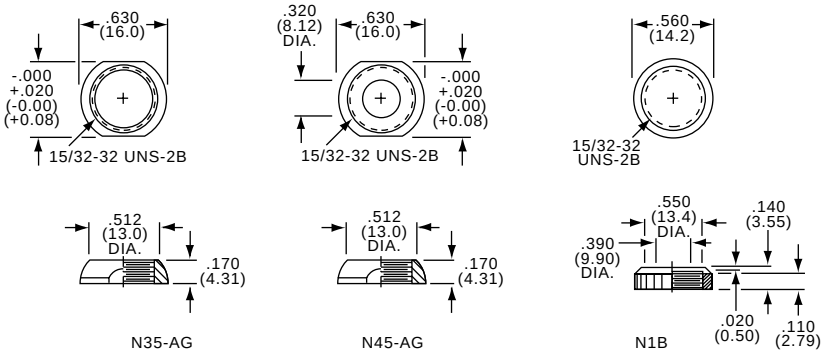

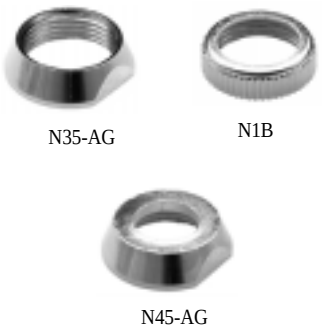

Model	Type	Description
N1B	15/32"	"Perfect Fit" knurled nut
N35-AG	15/32"	Decorative nut (supplied on switch)
N45-AG	15/32"	"Perfect Fit" decorative nut

For complete product information, order Catalog 1308390

Products for Industrial & Commercial Applications

Dimensions are shown for reference purposes only.

Dimensions are in inches and millimeters unless otherwise specified. Values in brackets are metric equivalents.

Specifications subject to change.

Technical Support Center
1-800-522-6752
www.tycoelectronics.com

Pushbutton Switches, PC Mount, Colored Button, Illuminated or Non-Illuminated

MATERIAL SPECIFICATIONS:

Contacts .....Silver plated
Case Material .....Polyester
Actuator Material .....Polyamide
Terminals .....Silver plated
Terminal Seal .....Epoxy
Button Material.....Polycarbonate

ENVIRONMENTAL SPECIFICATIONS

Operating Temperature.....-10°C to + 70°C (+14°F to +158°F)
Storage Temperature.....-25°C to + 85°C (-13°F to +185°F)
Solder Heat Resistance .....270°C 3 seconds, per MIL-STD-202, Method 210

TYPICAL PERFORMANCE CHARACTERISTICS:

Contact Rating .....0.4 VA Max. @ 20 VDC
Initial Contact Resistance.....50 Milliohms max.
Contact Timing.....Break-Before-Make
Insulation Resistance .....1,000 Megohms @ 500 VDC
Dielectric Strength .....500 VAC
Actuation Force .....200 Grams average
Plunger/Actuator Travel .....059" (1.50)
Life Expectancy .....10,000 Cycles

DPDT

Momentary



TP2M2AL2FA8

Momentary		
Non-Illuminated (No LED)	**Type**	**Button Color**
TP1MA2FA8	DPDT	Red
Illuminated (with LED)	**Type**	**Led/Button**
TP2M2AL2FA8	DPDT	Red
TP2M4AL4FA8	DPDT	Yellow
TP2M5AL5FA8	DPDT	Green

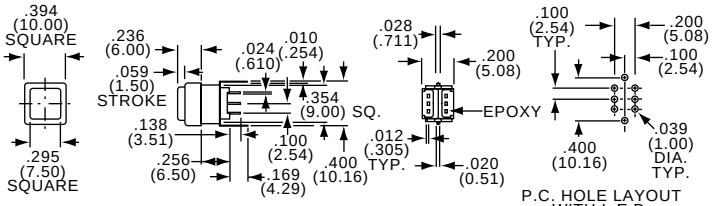

DPDT

Momentary



TP2M2CL2FC8

Momentary		
Non-Illuminated (No LED)	**Type**	**Button Color**
TP1MC2FC8	DPDT	Red
TP1MC4FC8	DPDT	Yellow
TP1MC5FC8	DPDT	Green
Illuminated (with LED)	**Type**	**LED/Button**
TP2M2CL2FC8	DPDT	Red
TP2M4CL4FC8	DPDT	Yellow
TP2M5CL5FC8	DPDT	Green

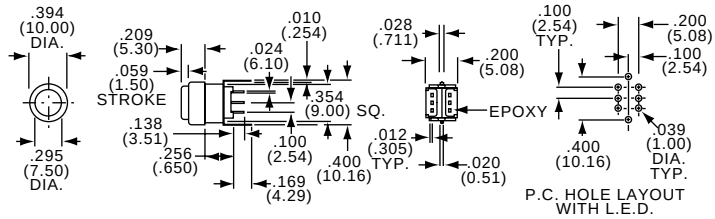

DPDT

Latching



TP2L2AL2FA8

Maintained		
Non-Illuminated (No LED)	**Type**	**Button Color**
TP1LA2FA8	DPDT	Red
TP1LA4FA8	DPDT	Yellow
TP1LA5FA8	DPDT	Green
Illuminated (with LED)	**Type**	**LED/Button**
TP2L2AL2FA8	DPDT	Red
TP2L4AL4FA8	DPDT	Yellow
TP2L5AL5FA8	DPDT	Green

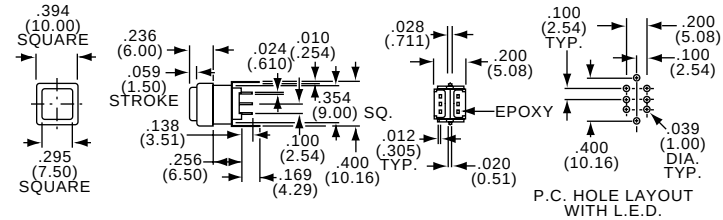

DPDT

Latching



TP2L2CL2FC8

Maintained		
Non-Illuminated (No LED)	**Type**	**Button Color**
TP1LC2FC8	DPDT	Red
Illuminated (with LED)	**Type**	**LED/Button**
TP2L2CL2FC8	DPDT	Red
TP2L4CL4FC8	DPDT	Yellow
TP2L5CL5FC8	DPDT	Green

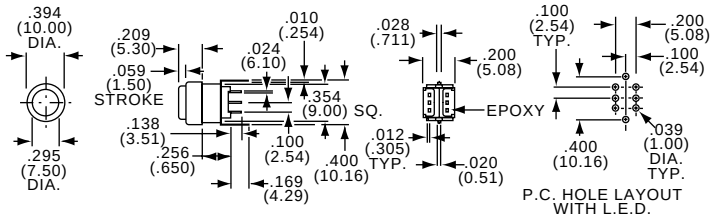

For complete product information, order Catalog 1308390

Pushbutton Switches, Part Number Matrix

PART NUMBERING SEQUENCE

Model	LED	Action	LED Color	Button	Button Color	Screen (BL or DL Only)	Frame	Frame Color
TP								

- **LED:** 1 = Non-illuminated (No LED); 2 = Illuminated (with LED)
- **Action:** M = Momentary; L = Latching
- **LED Color:** 2 = Red; 4 = Yellow; 5 = Green
- **Button:**
  - **TP1 (No LED):** A = Square, Small; B = Square, Large; C = Round, Small; D = Round, Large
  - **TP2 (With LED):** AL = Square, Small; BL = Square, Large; CL = Round, Small; DL = Round, Large
- **Button Color:** 2=Red; 4=Yellow; 5=Green
- **Screen (BL or DL Only):** 2=Red; 4=Yellow; 5=Green
- **Frame:** Blank = None; FA = Square, Small; FB = Square, Large; FD = Round, Large; FC = Round, Small
- **Frame Color:** 8 = Dark Gray

TP1M / TP1L — Non-Illuminated (No LED)

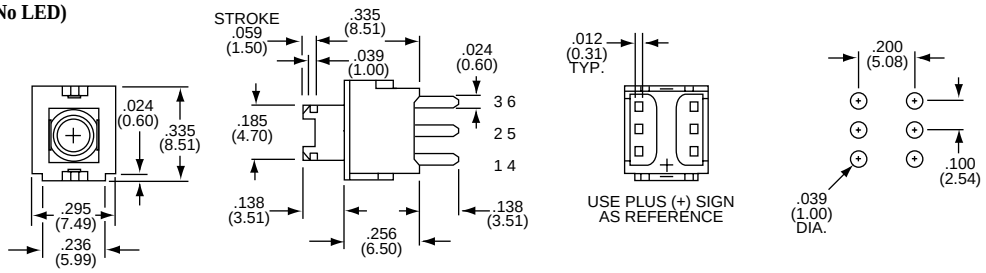

TP2M / TP2L — Illuminated (With LED)

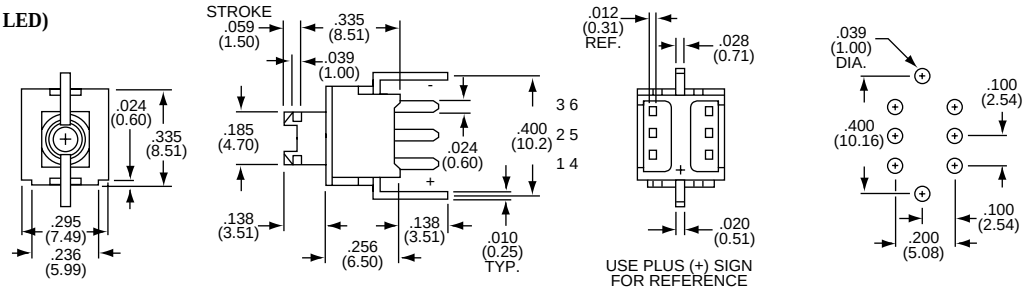

BUTTONS

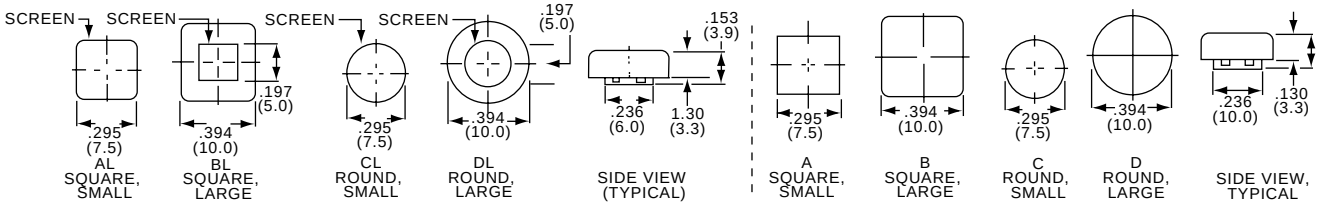

ASSEMBLY NOTES

Mount frame to switch, taking notice that tab orientation is necessary.

Mount button to switch by noting proper orientation of flats on plunger, then snap in place.

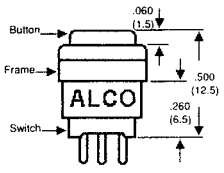

TYPICAL SWITCH CIRCUIT DIAGRAM

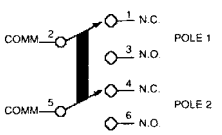

LED SPECIFICATIONS

Color	VR	IF	Operating Current	VF Nom.	VF Max.
(2) Red	5VDC	30mA	20mA	2.0V	2.8V
(5) Green	5VDC	20mA	15mA	2.0V	2.8V
(4) Yellow	5VDC	20mA	15mA	1.9V	2.5V

Current applied to LED must be lower than forward current (I_F) indicated. Value of the resistor is calculated by the formula:

$$R = \frac{E - V_F}{I_F}$$

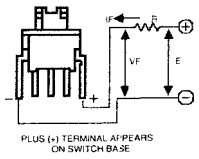

Specifications subject to change without notice.

Products for Industrial & Commercial Applications

Dimensions are shown for reference purposes only.

Dimensions are in inches and millimeters unless otherwise specified. Values in brackets are metric equivalents.

Specifications subject to change.

Technical Support Center
1-800-522-6752
www.tycoelectronics.com

Pushbutton Switches, 22mm, Oil-Tight, Round

FEATURES

- Fits 7/8" (22mm) diameter holes
- Full size buttons
- Meets NEMA 1, 12 and 13
- Rugged heavy-duty metal bushing, or thermoplastic bushings for full installation
- Matte black beveled frame finish
- IP65 protection level
- Snap-block contacts
- 6A @ 600VAC
- Easy "no tool" mounting
- Choice of screw terminals or dual .110/.250 quick connects
- Double-break silver contacts standard, gold plated optional
- Stackable

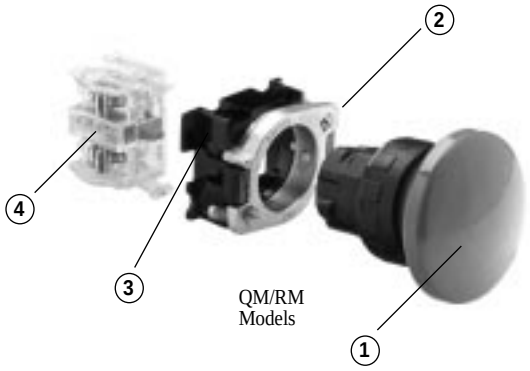

QM/RM Models

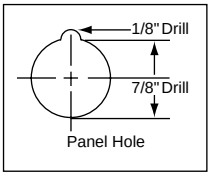

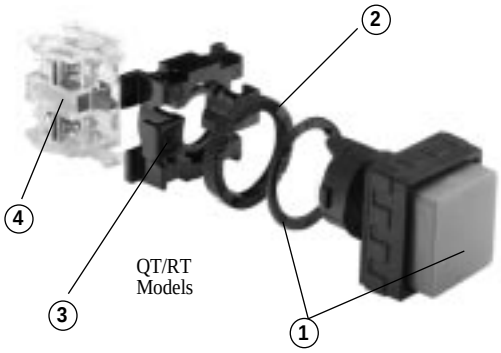

QT/RT Models

INSTALLATION & ASSEMBLY

A. Engage the operator (1) into the 22.5mm dia. mounting hole.

B. Engage metal ring (2) with operator (bayonet lock). Tighten set screws against back of panel.

C. Snap the contact blocks (4) on the support(3).

D. Snap the support (3) complete with contact blocks (4) on the metal ring (2).

A. Engage the operator and seal (1) into the 22.5mm dia. mounting hole.

B. Mount back-up nut (2) on bushing and then tighten against panel.

C. Snap the contact blocks (4) on the support (3).

D. Snap the support (3) complete the contact blocks (4) onto operator (1).

MOMENTARY

Metal Bushings
Contact blocks not supplied, order separately.
(See page 6070.)

Model	Type
RM010(*)	Flush Button
RM020(*)	Extended Button
RM015(*)	Extended Guard

(*) Specify color by adding suffix number:
(0) Black, (2) Red, (4) Yellow, (5) Green, (6) Blue, (8) Grey, (9) White.

Note: Front beveled frame is black.

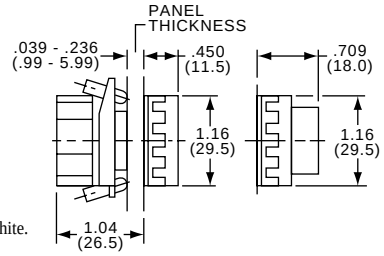

Thermoplastic Bushings (Threaded)
Contact blocks not supplied, order separately.
(See page 6070.)

Model	Type
RT010(*)	Flush Button
RT020(*)	Extended Button

(*) Specify color by adding suffix number:
(0) Black, (2) Red, (4) Yellow, (5) Green, (6) Blue, (8) Grey, (9) White.

Note: Front beveled frame is black.

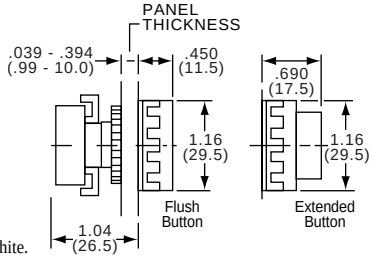



RM010



RM020

RT010

RT020

For complete product information, order Catalog 1308390

Products for Industrial & Commercial Applications

Dimensions are shown for reference purposes only.

Dimensions are in inches and millimeters unless otherwise specified. Values in brackets are metric equivalents.

Specifications subject to change.

Technical Support Center
1-800-522-6752
www.tycoelectronics.com

Pushbutton Switches, 22mm, Oil-Tight, Round or Mushroom or Dual Button



RM0502

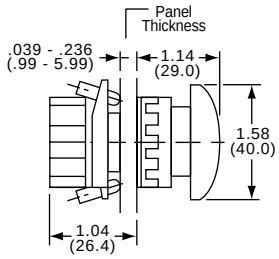

MOMENTARY

Mushroom
Contact blocks not supplied, order separately. (See page 6070.)

Model	Type	Bushing
RM0502	Mushroom, Red	Metal, Bayonet
RT0502	Mushroom, Red	Thermoplastic, Threaded Bushing
RM0500	Mushroom, Black	Metal, Bayonet
RT0500	Mushroom, Black	Thermoplastic, Threaded Bushing
RM0552	Mushroom, Red	Metal, Bayonet (Wobble)

Note: Front beveled frame is black.



RM0652

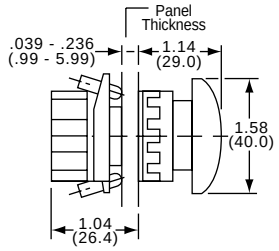

PUSH-TO-LOCK, TWIST-RELEASE

Metal Bushings
Contact blocks not supplied, order separately. (See page 6070.)
Note: Use F40/V40 for N.C. contacts, and
FAO/VAO for N.O. contacts.

Model	Type	Arrow
RM0652	Mushroom, Red	White

Note: Front beveled frame is black.



RM030

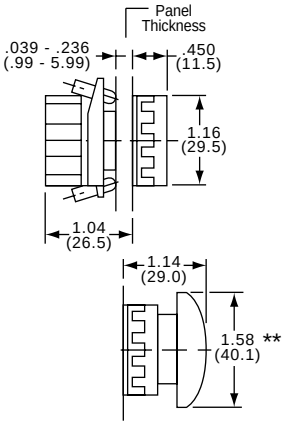

MAINTAINED

Contact blocks not supplied, order separately. (See page 6070.)
Note: Use F40/V40 for N.C. contacts and
FAO/VAO for N.O. contacts.

Model	Type
RM030(*)	Flush Button
RM0450	Mushroom, Black
RM0452	Mushroom, Red
RM0532	Push-Pull, Mushroom, Red

(*) Specify color by adding suffix number:
(0) Black, (2) Red, (4) Yellow, (5) Green, (6) Blue, (8) Grey, (9) White.

Note: Front beveled frame is black.
**** Note: RM0532 mushroom 35mm Dia. (1.38)**



QT01201

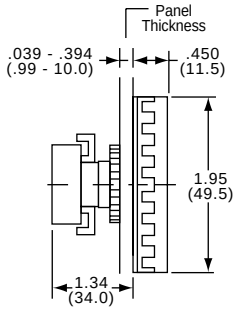

MOMENTARY DUAL OPERATOR*

Threaded Thermoplastic bushing
Contact blocks not supplied, order separately. (See page 6070.)
Black buttons available.

Model	Color	Legend
QT01201	Green, Red	As Shown
QT012STSTH	Green, Red	Start & Stop Horizontal

*Not oil tight construction, not sealed; meets NEMA 1 only.
Note: Front beveled frame is black.

For complete product information, order Catalog 1308390

Products for Industrial & Commercial Applications

Dimensions are shown for reference purposes only.

Dimensions are in inches and millimeters unless otherwise specified. Values in brackets are metric equivalents.

Specifications subject to change.

Technical Support Center
1-800-522-6752
www.tycoelectronics.com

Pushbutton or Keylock or Selector Switches, 22mm, Oil-Tight



QM010



QT010

MOMENTARY

Metal Bushings
Contact blocks not supplied, order separately. (See page 6070.)

Model	Type
QM010(*)	Flush Button
QM020(*)	Extended Button

(*) Specify color by adding suffix number:
(0) Black, (2) Red, (4) Yellow, (5) Green, (6) Blue, (8) Grey, (9) White.

Note: Front beveled frame is black.

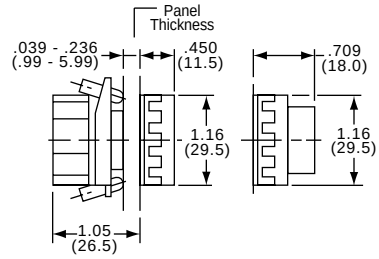

Thermoplastic Bushings (Threaded)
Contact blocks not supplied, order separately. (See page 6070.)

Model	Type
QT010(*)	Flush Button
QT020(*)	Extended Button

(*) Specify color by adding suffix number:
(0) Black, (2) Red, (4) Yellow, (5) Green, (6) Blue, (8) Grey, (9) White.

Note: Front beveled frame is black.

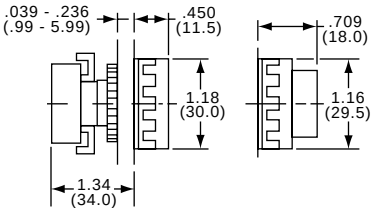



RM4040



RM3040



RM200/201 with/2 keys

2 POSITION SELECTORS/KEYLOCK MAINTAINED

Metal Bushings
Contact blocks not supplied, order separately.
(See page 6070.)

Model	Action	Throw	CAM	Remove Key
RM4040	Maintained, Black	120°	1	Long Selector
RM3040	Maintained, Black	120°	1	Selector
RM200	Maintained	60°	1	
RM201	Maintained	60°	1	
RM250	Momentary, Right	60°	1	
RM204	Maintained	120°	1	
RM205	Maintained	120°	1	
E1	Spare Key			

Note: Front beveled frame is black.

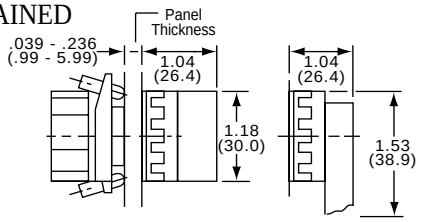

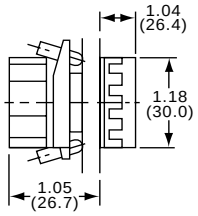



RM3100



RM4100

3 POSITION SELECTORS

Short Handle, Metal Bushings
Contact blocks not supplied, order separately. (See page 6070.)

Model	Action	CAM	Model	Action	CAM
RM3100	Maintained, Black	2	RM3700	Momentary, Right Side, Black	2
RM3120	Maintained, Black	3	RM3800	Double Momentary, Black	2
RM3130	Maintained, Black	4	RM3830	Double Momentary, Black	4

Note: Front beveled frame is black.

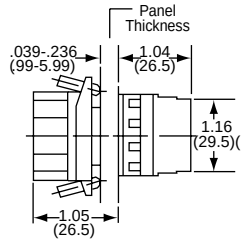

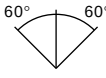

60° Throw between positions

Long Handle, Metal Bushings
Contact blocks not supplied, order separately. (See page 6070.)

Model	Action	CAM	Model	Action	CAM
RM4100	Maintained	2	RM4700	Momentary, Right Side	2
RM4120	Maintained	3	RM4800	Double Momentary	2
RM4130	Maintained	4			

Note: Front beveled frame is black.

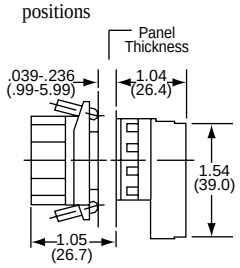

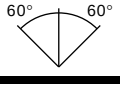

60° Throw between positions

For complete product information, order Catalog 1308390

6 Switches

Products for Industrial & Commercial Applications

Dimensions are shown for reference purposes only.

Dimensions are in inches and millimeters unless otherwise specified. Values in brackets are metric equivalents.

Specifications subject to change.

Technical Support Center
1-800-522-6752
www.tycoelectronics.com

Keylock or Pushbutton Switches, 22mm, Oil-Tight or Pilot Lights

3 POSITION KEYLOCK SELECTOR MAINTAINED OR MOMENTARY



Supplied with 2 keys

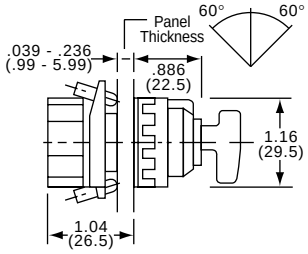

Metal Bushings
Contact blocks not supplied, order separately. (See page 6070.)

Model	Action	CAM	Remove Key	Model	Action	CAM	Remove Key
RM210	Maintained	2		RM243	Maintained	4	
RM220	Maintained	2		RM270	Mom. Right Side	2	
RM222	Maintained	3		RM272	Mom. Right Side	3	
RM230	Maintained	2		RM273	Mom. Right Side	4	
RM232	Maintained	3		RM280	Mom. Both Sides	2	
RM233	Maintained	4		E1	Spare Key		
RM240	Maintained	2					

Note: Front beveled frame is black.

PILOT LIGHTS (FULL VOLTAGE TYPE)

Lamps: order separately, miniature bayonet base.

Lamps: use G3 1/2 on QM600(*), use T3 1/4 on SR601(*), RM600(*). Custom legends available.



QM600
(RM600)

Metal Bushing

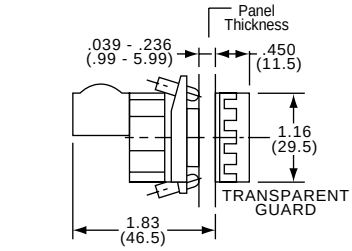



SR601
Threaded
Thermoplastic
Bushing Front lampable

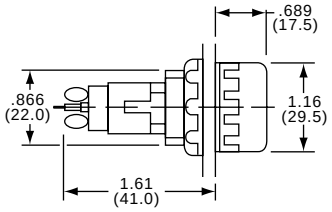

Model	Type
QM600(*)	Square pilot light, metal bushing
SR601(*)	Round pilot light, plastic bushing screw turn
RM600(*)	Round pilot light, metal bushing

(*) Specify color by adding suffix number: (2) Red, (3) Orange, (4) Yellow, (5) Green, (6) Blue, (9) White.

ILLUMINATED/ROUND MOMENTARY/MAINTAINED



RM120

Application Note:
+V40/F40 used for N.C contact block.
+VA0/FA0 used for N.O.contact block.

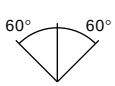

60° Throw between positions

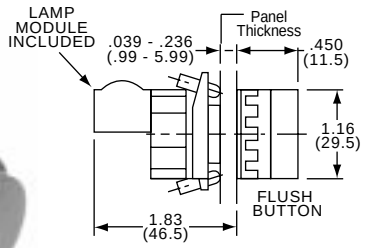

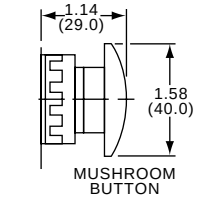

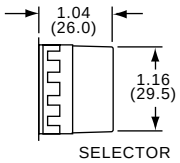

Metal Bushing
Contact blocks not supplied, order separately. (See page 6070.)
Lamps: Use T-3 1/4 or G3 1/2 incandescent or neon lamps.

Model	Action	Type	Cam Type
RM120(*)	Momentary	Extended Button	
RM122(*)	Momentary	Guarded Button	
+ RM130(*)	Maintained	Flush Button	Push-On - Push-Off See Application Note
+ RM145(*)	Maintained	Mushroom	
RM150(*)	Momentary	Mushroom	
RM1652	Twist Release	Mushroom, Red	
Illuminated Selectors			
RM650(*)	Maintained	2-Pos. Selector**	1
RM653(*)	Maintained	3-Pos. Selector**	2

When operating from line voltage use step down transformers 5BO or 570.
(*) Specify color by adding suffix number: (2) Red, (4) Yellow, (5) Green, (6) Blue, (9) White.

Note: RM145 and RM150 available only in red, yellow, green.
**Use G3 1/2 lamps only.

Note: Front beveled frame is black.

For complete product information, order Catalog 1308390

Products for Industrial & Commercial Applications

Dimensions are shown for reference purposes only.

Dimensions are in inches and millimeters unless otherwise specified. Values in brackets are metric equivalents.

Specifications subject to change.

Technical Support Center
1-800-522-6752
www.tycoelectronics.com

Pushbutton Switches, 22mm, Oil-Tight, Round or Square Buttons



QM122

SQUARE, MOMENTARY ILLUMINATED

Metal Bushing
Contact blocks not supplied, order separately. (See page 6070.)
Lamp circuit isolated. Order lamps separately.
Custom legends available.

Model	Type
QM122(*)	Flush Button
QM120(*)	Extended Button

(*) Specify color by adding suffix number: (2) Red, (4) Yellow, (5) Green, (6) Blue, (9) White.

Note: Front beveled frame is black.

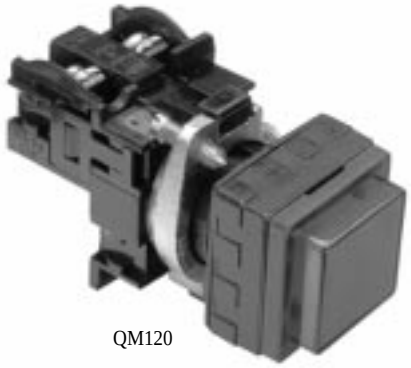

QM120

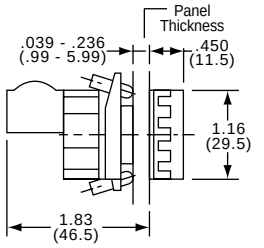

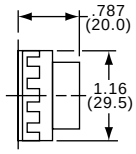



RT120

ROUND, MOMENTARY ILLUMINATED

Thermoplastic
Contact blocks not supplied, order separately. (See page 6070.)
Lamps: use T-3 1/4 or G3 1/2 incandescent or neon lamps.

Model	Action	Type
RT120(*)	Momentary	Extended Button

(*) Specify color by adding suffix number: (2) Red, (4) Yellow, (5) Green, (6) Blue, (9) White.

Note: Front beveled frame is black.

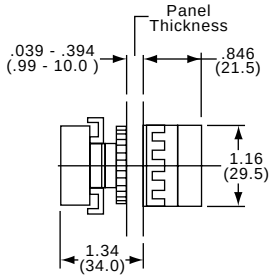

For complete product information, order Catalog 1308390

Products for Industrial & Commercial Applications

Dimensions are shown for reference purposes only.

Dimensions are in inches and millimeters unless otherwise specified. Values in brackets are metric equivalents.

Specifications subject to change.

Technical Support Center
1-800-522-6752
www.tycoelectronics.com

Standard Contact Blocks

An almost unlimited number of circuit control options are possible using various combinations of contact blocks. Up to twelve "V" or "F" family modular blocks may be used with any operator in the Reliant 22, 2200 or 6000 series, depending on circuit requirements and operator design. The exclusive SNAP-BLOC design permits assembly without the use of tools – no screws or hardware to get lost. Choose either screw terminals or dual male .110"/.250" quick connect terminals. Plunger color indicates closure mode. The double break silver contacts are enclosed in a tough transparent polycarbonate housing, permitting visual inspection of contacts. Designed-in rocking action assures long, reliable life; over several million operations in normal use. Operating temperature range: -20°C to +70°C.

Application Notes

1. Up to 6 contact blocks may be stacked and snap-mounted in either the upper and/or lower position on the back on any Reliant 22, Series 4000 or 6000 operator.
2. In order to maintain optimum insulating distances when contact blocks are stacked, wiring connections should be in same polarity for operation above 300VAC.
3. Blocks may be prewired and snapped into place for easier assembly.
4. Remove blocks by simply prying tabs. Small screwdriver is all that is necessary.

F&V Contact blocks are UL recognized. File Number E-45364
CSA LR-20785-19 CE MARK

ELECTRICAL CONTACT RATINGS

Condition	Function	Standard Series (600 VAC Max.)		
AC Operation		120V	300V	600V
Inductive Loads	Make	30A	12A	6A
	Continuous	6A	6A	6A
.350 P.F. min.	Break	3A	1.2A	0.6A
Resistive Loads	Make, Continuous	6A	6A	6A
.750 P.F. min.	Carry & Break			
DC Operation				
Inductive &	Make	1.1A		
Resistive	Continuous Carry	6A	6A	6A
Loads	Break	1.1A		



F40

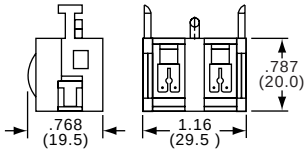

QUICK CONNECT

Model	Contacts	Plunger Color
F40	Normally Closed	Red
F50	Normally Open	Green
FA0	N.O. Early Make	Yellow
FR0	N.C. Late Break	Black

Note: FA0 and FR0 contacts "overlap."



V40

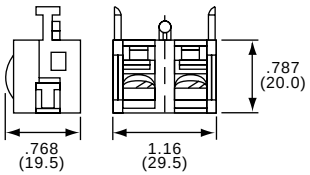

SCREW TERMINAL

Model	Contacts	Plunger Color
V40	Normally Closed	Red
V50	Normally Open	Green
VA0	N.O. Early Make	Yellow
VR0	N.C. Late Break	Black

Note: "V" Series is available with gold plated contacts; order V40G, V50G, VA0G, VR0G. Note: VAO and VRO contacts "overlap."



101B1

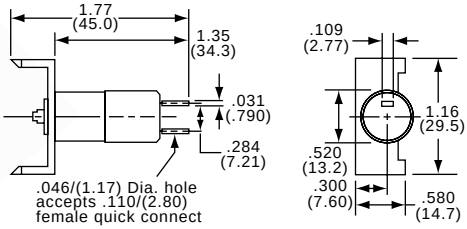

ELECTRONIC DUTY CONTACT BLOCKS

Hermetically sealed reed contact block for logic level use. Use with any pushbutton or with 2 or 3 position selector keylock, having cam type 4 or 5. Rating: 5VA (100ma @ 50 VDC max.) Contact resistance: 100 milliohms max.

Model	Contacts
101B1	SPST, Normally Closed
101C1	SPST, Normally Open
V50D	*Dummy Contact Block

Note: Unit accepts .110/(2.80) female quick connect.
***Note: Use dummy V50 block (shown) when used with selector operator. Order separately.**

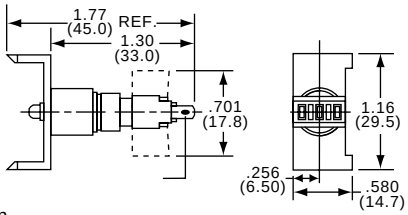

ALTERNATE ACTION MAINTAINED CONTACTS

Instrument grade double throw contacts
Converts any momentary pushbutton or mushroom operator to push-on/push-off control. 6A @ 125 VAC, 3A @ 250 VAC. Solder terminals or quick connect.

Model	Contacts	Action
106D1	SPDT	Push-On/Push-Off
206N1	DPDT	Push-On/Push-Off
406N1	4PDT	Push-On/Push-Off

For complete product information, order Catalog 1308390

Products for Industrial & Commercial Applications

Dimensions are shown for reference purposes only.

Dimensions are in inches and millimeters unless otherwise specified. Values in brackets are metric equivalents.

Specifications subject to change.

Technical Support Center
1-800-522-6752
www.tycoelectronics.com

Series 6000 and Reliant'22 Contact Selection

1. Determine how many contacts are required for the application, and what contact closure sequence is needed for each contact.
   a. 2-Position Operators: There are only two practical possibilities for contact closure sequence. Using "O" to indicate an open and "X" to indicate a closed contact, the options are shown in the table to the right. All Reliant 22 and Series 6000 2-position selection selector and keylock operators provide these options.
   b. 3-Position Operators: There are six practical possibilities for contact closure sequence. Using "O" to indicate an open contact, and "X" to indicate a closed contact, the options are shown in the table to the right. Four different cam types are available to provide various combinations of contact closure sequence. Cam Type 2 (see table below) provides the most popular closure sequence, and Cam Type 3 provides all six possibilities, depending on the contact block models chosen. Note that each operator has an upper and lower contact block location, and that the cam profiles are different for upper and lower locations, except for Cam Type 2.
2. Make a truth table similar to that shown in the example at the bottom of the page, in which each contact required by the circuit of the application is represented. Up to 12 contacts may be used for each operator, depending on the sequences required and the types of contact blocks chosen.
3. Refer to the contact sequence table (below). Find the cam type that will provide all of the required contact closure sequences, and note which contact block model will be needed for each circuit contact.
4. Now refer to one of the tables on the next page to find the operator model that has the cam type needed in the application and that provides the desired features with respect to action (maintained or momentary) type of actuator (lever or key), etc.

2 Position Operators	
0 left	1 right
O	X
X	O

3 Position Operators		
2 left	0 center	1 right
O	O	X
X	O	O
O	X	X
X	X	O
O	X	O
X	O	X

CONTACT CLOSURE SEQUENCE CHART

Contact Blocks	2-Position Operators
Model	CAM Type 1 upper & lower locations
	0 1
V40 or F40 Red	X 0
V50 or F50 Green	0 X
VA0 or FA0 Yellow	0 -X
VR0 or FR0 Black	X -0
101B1	X -0
101C1	0 X

X = Closed 0 = Open

3-Position Operators								
CAM Type 2		CAM Type 3		CAM Type 4				
upper location	lower location	upper location	lower location	upper location	lower location			
2 0 1	2 0 1	2 0 1	2 0 1	2 0 1	2 0 1			
X 0 0	X 0 0	X 0 0	0 X 0	0 X -X	X -X 0			
0 0 X	0 0 X	0 0 X	0 0 X	X 0 0	0 0 X			
0 X- X	0 X- X	0 X- X	X 0 X	X 0 0	0 0 X			
X- X 0	X- X 0	X- X 0	X- X 0	0 X- X	X- X 0			
				0 X- X	X- X 0			
				X 0 0	0- 0 X			

Example: An "Off-On-Reset" circuit control requires a 3-position or 2-position keylock switch. The key is to be removable in the "OFF" and "ON" position and the "Reset" position must be momentary (spring return from right to center). All contacts are open in the "Off" position, and two contacts are closed in the "On" position. In the "Reset" position a third contact must close and one of the contacts in the "on" position must open. This contact closure sequence is shown by the following truth table:

Contact Number	Off (2)	On (0)	Reset (1)
1	O	X	X
2	O	X	O
3	O	O	X

Referring to the Contact Closure Sequence Table, it is seen that cam Type 3 provides these sequences. In addition, the contact block models that should be used are given; model VA0 (or FA0 for contact No. 1, to be installed in the upper contact block location; model V40 (or F40) for contact No. 2, to be installed in the lower contact block location; and model V50 (or F50) for contact No. 3, which may be used in either the upper or lower contact block location, behind one of the other two blocks. Reference to the operator model listings shows that model RM272 provides cam Type 3 and has desired momentary action and key removability.

SELECTOR & KEYLOCK OPERATORS

ALCOSWITCH selector and keylock operators, in combination with the contact blocks listed on page 6070, are designed to fulfill the circuit requirements of almost any 2- or 3-position control application. Each operator has two locations (upper and lower) into which contact blocks may be snap-mounted. Up to size contact blocks may be stacked in each location, the maximum number depending on the contact block models chosen and the contact closure sequences required. (Note: only one logic level block may be used in each location.)

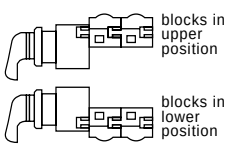

For complete product information, order Catalog 1308390

Products for Industrial & Commercial Applications
Dimensions are shown for reference purposes only.
Dimensions are in inches and millimeters unless otherwise specified. Values in brackets are metric equivalents.
Specifications subject to change.
Technical Support Center 1-800-522-6752 www.tycoelectronics.com

Pushbutton Switches, 30mm, Round or Mushroom Buttons



M60102

FLUSH GUARD MOMENTARY

Metal Bushing
Replaces T6010
Contact blocks not supplied, order separately. (See page 6070.)

Model	Special Details
M6010(*)	Momentary

(*) Specify color by adding suffix number:
(0) Black, (2) Red, (4) Yellow, (5) Green, (6) Blue, (9) White.

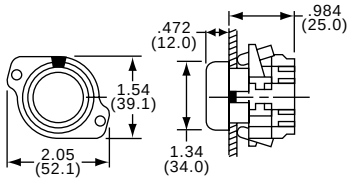



M60200

EXTENDED BUTTON MOMENTARY

Metal Bushing
Replaces T6020
Contact blocks not supplied, order separately. (See page 6070.)

Model	Special Details
M6020(*)	Momentary

(*) Specify color by adding suffix number:
(0) Black, (2) Red, (4) Yellow, (5) Green, (6) Blue, (9) White.

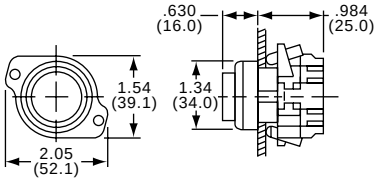



M60572

MUSHROOM HEAD MOMENTARY PUSH MAINTAINED

Metal Bushing
Replaces T6020/M6050
Contact blocks not supplied, order separately. (See page 6070.)

Model	Special Details	Color
M6057(*)	Momentary	(*)
M60532	Push-Pull	Red
M60652	Push-Lock/Twist To Release	Red

(*) Specify color by adding suffix number:
(0) Black, (2) Red, (3) Orange, (4) Yellow, (5) Green, (6) Blue, (9) White.

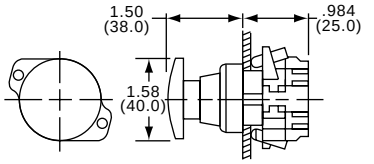



M60582

LARGE MUSHROOM HEAD MOMENTARY PUSH

Metal Bushing
Replaces T6051/M6051
Contact blocks not supplied, order separately. (See page 6070.)

Model	Special Details	Color
M60582	Momentary	Red

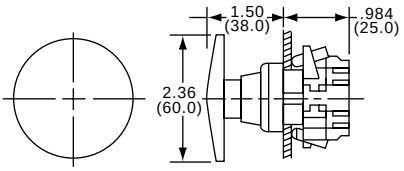



M60802

LARGE GUARDED MUSHROOM HEAD MOMENTARY PUSH

Metal Bushing. Heavy duty metal bushing and guard.
Contact blocks not supplied, order separately. (See page 6070.)

Model	Special Details
M6080(*)	Momentary

(*) Specify color by adding suffix number: (0) Black, (2) Red, (5) Green.

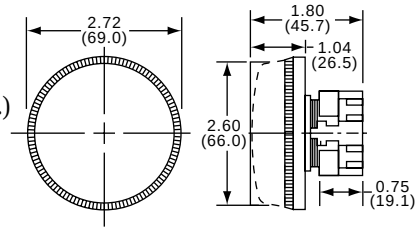

For complete product information, order Catalog 1308390

Selector Switches or Joysticks, 30mm, Oil-Tight



M65500

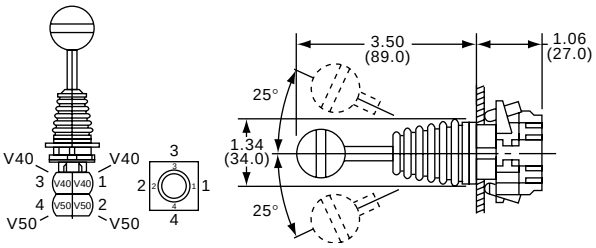

5-POSITION JOYSTICK (4 Active & Center-Off)

Metal Bushing
Maintained or momentary model with or without mechanical latch. Inherent design requires use of two N.O. and N.C. Contact blocks not supplied, order separately. (See page 6070.) Supplied with legend plate (1-2-3-4), black knob.

CONTACT ARRANGEMENT
Contact blocks should be placed as shown. All contacts are held open in neutral position. Each number contact closed when activated. Model M6531- is similar to M65510, but has only two active positions, requires one N.O. and one N.C. contact block.

Note: All positions are mutually exclusive and action must pass through neutral for all changes of operator level.

Model	Action					
M65310	Momentary, No Latch		(On)	Off	(On)	
M65500	Maintained, No Latch	On	On	Off	On	On
M65510	Momentary, No Latch	(On)	(On)	Off	(On)	(On)
M65810	Momentary w/Latch	(On)	(On)	Off	(On)	(On)

(On) indicates momentary position.



M64022

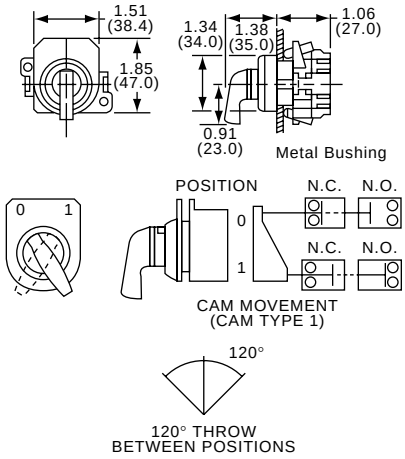

2-POSITION SELECTOR MAINTAINED

Metal Bushing
Contact blocks not supplied, order separately. (See page 6070.) Legend plant included. Replaces T6402 Series.

Model	Action	Lever	Position Number
M6402(*)	Maintained	Long	0 1

(*) Specify color by adding suffix number: (0) Black, (2) Red.



M64120

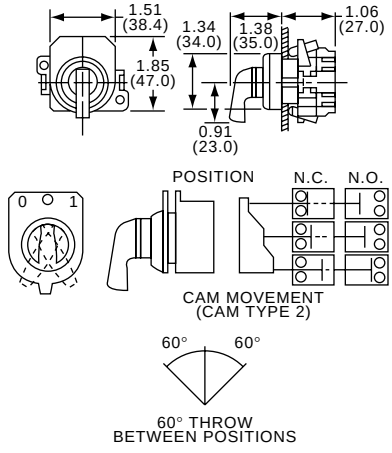

3-POSITION SELECTOR MAINTAINED OR MOMENTARY

Metal Bushing
Contact blocks not supplied, order separately. (See page 6070.) Legend plate included. Replaces T6400 Series.

Model	Action	Lever	Cam	Position Number
M6410(*)	Maintained	Long	2	2 0 1
M6412(*)	Maintained	Long	3	2 0 1
M6470(*)	Mom. 1 Side	Long	2	2 0 ◄1
M6480(*)	Mom. 2 Sides	Long	2	2► 0 ◄1

(*) Specify color by adding suffix number: (0) Black, (2) Red.

For complete product information, order Catalog 1308390

Products for Industrial & Commercial Applications
Dimensions are shown for reference purposes only.
Dimensions are in inches and millimeters unless otherwise specified. Values in brackets are metric equivalents.
Specifications subject to change.
Technical Support Center 1-800-522-6752 www.tycoelectronics.com

Keylock or Pushbutton Switches, 30mm, Oil-Tight



M6200

2 POSITION KEY SELECTOR MAINTAINED OR MOMENTARY

Metal Bushing
Supplied with two keys and legend plate.
Contact blocks not supplied, order separately.
(See page 6070) Replaces T6200 Series.

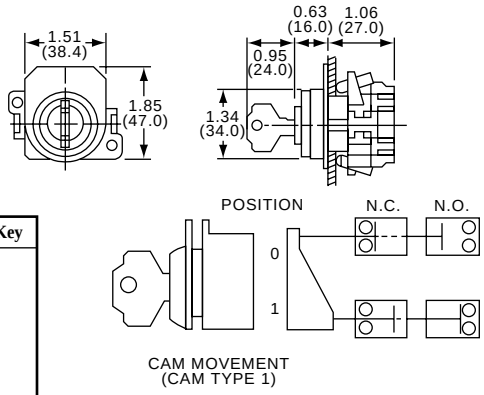

Model	Action	Cam	Position Number			Throw	Remove Key
M6200	Maintained	1	0		1	60°	
M6201	Maintained	1	0		1	60°	
M6250	Momentary	1	0 ◄		1	60°	
G001	Additional Keys						

◄ Indicates momentary return position



M6270

3 POSITION KEY SELECTOR MAINTAINED OR MOMENTARY

Metal Bushing
Supplied with two keys and legend plate.
Contact blocks not supplied, order separately.
(See page 6070.) Replaces T6200 Series.

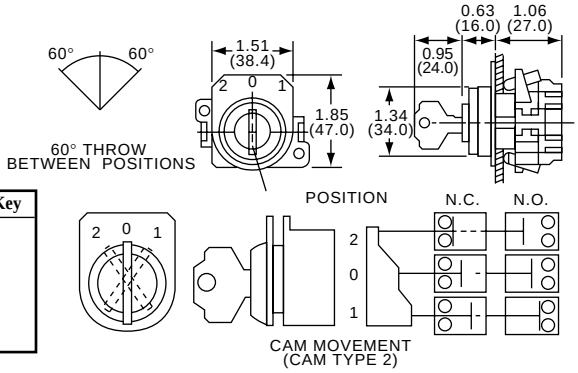

Model	Action	Cam	Position Number			Remove Key
M6210	Maintained	2	2	0	1	
M6270	Mom. 1 Side	2	2	0 ◄	1	
M6280	Mom. 2 Sides	2	2 ►	0 ◄	1	
G001	Additional Keys					

◄ Indicates momentary return position



M61202406

ILLUMINATED EXTENDED BUTTON MOMENTARY

Metal Bushing
miniature bayonet base lamps. Lamp circuit is isolated. Contact blocks not supplied, order separately. (See page 6070) Replaces T6120.

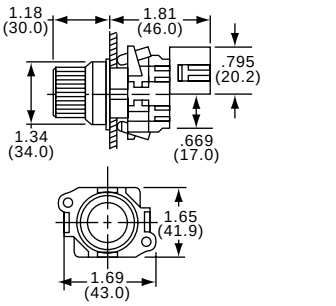

Model	Special Details
M6120(*)406	Momentary

(*) Specify color by adding suffix number: (2) Red, (4) Yellow, (5) Green, (9) White.



M61502406

ILLUMINATED MUSHROOM MAINTAINED OR MOMENTARY

Metal Bushing
Contact block not supplied, order separately. (See page 6070.)
Uses miniature bayonet base lamps. Lamp circuit is isolated.
(Replaces T6150)

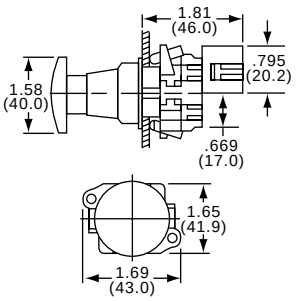

Model	Special Details
M6150(*)406	Momentary
M6153(*)406	Maintained, Push-Pull

(*) Specify color by adding suffix number: (2) Red, (4) Yellow, (5) Green, (9) White.

For complete product information, order Catalog 1308390

Products for Industrial & Commercial Applications

Dimensions are shown for reference purposes only.

Dimensions are in inches and millimeters unless otherwise specified. Values in brackets are metric equivalents.

Specifications subject to change.

Technical Support Center
1-800-522-6752
www.tycoelectronics.com

Pushbutton Switches, 16mm, Illuminated

FEATURES:

Command Series Illuminated Pushbuttons are instrument-grade switches having snap-acting double break contacts, silver clad and gold plated to satisfy the requirements of logic level and power switching. **Contacts are electrically independent of one another and are isolated from the lamp circuit.** Tactile feel is excellent and maintained models have latching feature for visible indication of status. Uses T1-3/4 midget flanged base lamp, relampable from front of panel. Legends may be provided using printed transparent tape affixed to inner button. Oiltight models meet NEMA 1, 12 & 13 requirements. UL Recognized, File E-51302, CSA LR-20479

Note: Recommended panel thickness 4mm max.

MATERIAL SPECIFICATIONS:

Contacts .....Gold plate over silver clad

TYPICAL PERFORMANCE CHARACTERISTICS:

Contact Rating .....0.4 VA @ 20 VDC or Peak AC
5 A @ 250 VAC or 24 VDC (Resistive)
Initial Contact Resistance.....20 Milliohms max.
Insulation Resistance .....100 Megohms min.
Dielectric Strength .....1,500 VAC
Life Expectancy .....100,000 Operations @ rated current

ENVIRONMENTAL SPECIFICATIONS:

Operating Temperature.....-4°F to +122°F (-20°C to +50°C)

ROUND



164EL11

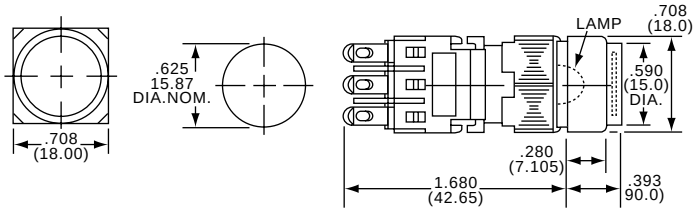

Non-Oiltight	Oiltight	Contact	Action
164EL11	165EL11	1 N.O. & N.C.	Momentary
164EL22	165EL22	2 N.O. & N.C.	Momentary
164EL33	165EL33	3 N.O. & N.C.	Momentary
164EL511	165EL511	1 N.O. & N.C.	Push on/Push off
164EL522	165EL522	2 N.O. & N.C.	Push on/Push off
164EL533`	165EL533	3 N.O. & N.C.	Push on/Push off

Application Note: For lens sets and lamps, see page 6077

SQUARE

Lens set and lamps not supplied.



164SL11

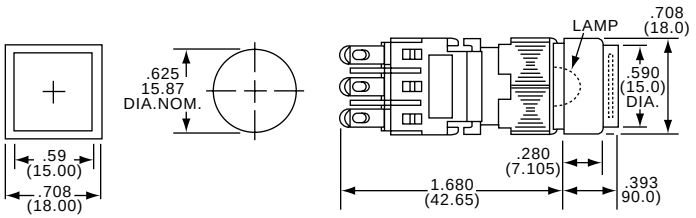

Non-Oiltight	Oiltight	Contact	Action
164SL11	165SL11	1 N.O. & N.C.	Momentary
164SL22	165SL22	2 N.O. & N.C.	Momentary
164SL33	165SL33	3 N.O. & N.C.	Momentary
164SL511	165SL511	1 N.O. & N.C.	Push on/Push off
164SL522	165SL522	2 N.O. & N.C.	Push on/Push off
164SL533	165SL533	3 N.O. & N.C.	Push on/Push off

Application Note: For lens sets and lamps, see page 6077

RECTANGULAR

Lens set and lamps not supplied.



164TL11

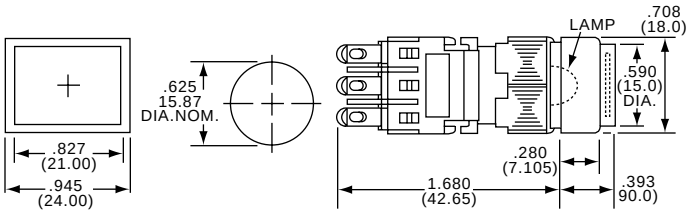

Non-Oiltight	Oiltight	Contact	Action
164TL11	165TL11	1 N.O. & N.C.	Momentary
164TL22	165TL22	2 N.O. & N.C.	Momentary
164TL33	165TL33	3 N.O. & N.C.	Momentary
164TL511	165TL511	1 N.O. & N.C.	Push on/Push off
164TL522	165TL522	2 N.O. & N.C.	Push on/Push off
164TL533	165TL533	3 N.O. & N.C.	Push on/Push off

Application Note: For lens sets and lamps, see page 6077

Products for Industrial & Commercial Applications
Dimensions are shown for reference purposes only.
Dimensions are in inches and millimeters unless otherwise specified. Values in brackets are metric equivalents.
Specifications subject to change.
Technical Support Center
1-800-522-6752
www.tycoelectronics.com

Selector or Keylock Switches, 16mm

FEATURES:

Command Series Selector & Keylock Switches are 2 & 3-position rotary types with snap-cutting double break contacts. All models have 90° throw. Contacts are silver-clad and gold-plated to provide reliable operation at logic levels as well as for power switching applications. Contacts are electrically isolated from one another. Keylock types are supplied with two keys. Oiltight models meet NEMA 1, 12 & 13 requirements. PC/Wirewrap terminations also available. Consult factory.

UL Recognized File E-51302

CSA LR-20479

MATERIAL SPECIFICATIONS:

Contacts .....Gold plate over silver clad

TYPICAL PERFORMANCE CHARACTERISTICS:

Contact Rating .....0.4 VA @ 20 VDC or Peak AC
5 A @ 250 VAC or 24 VDC (Resistive)
Initial Contact Resistance.....20 Milliohms max.
Insulation Resistance .....100 Megohms min.
Dielectric Strength .....1,500 VAC
Life Expectancy .....100,000 Operations at rated current

ENVIRONMENTAL SPECIFICATIONS:

Operating Temperature.....-4°F to +158°F (-20°C to +70°C)

SELECTORS



164P2B11

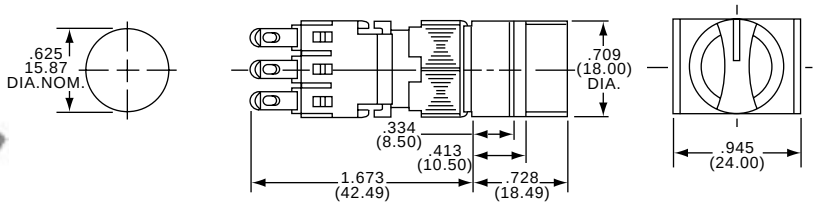

Non-Oiltight	OIltight	Contact	Action
164P2B11	165P2B11	1N.0. & N.C.	2 Pos. Maintained
164P2B22	165P2B22	2N.0. & N..C.	2 Pos. Maintained
164P2B33	165P2B33	3N.0. & N.C.	2 Pos. Maintained
164P0B22		2N.0. & N.C.	2 Pos. Momentary Right
164P0B33		3N.O. & N.C.	2 Pos. Momentary Right
164P3B22	165P3B22	2N.O. & N.C.	3 Pos. Center Off/Maintained
164P3B33	165P3B33	3N.O. & N.C.	3 Pos. Center Off

KEYLOCKS



164J2A11

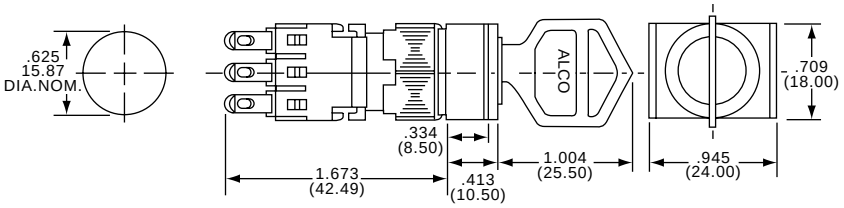

2 Position Keylocks

Non-Oiltight	Oiltight	Contact	Action
164J2A11	165J2A11	1N.O. & N.C.	Maintained, key pull left
164J2A22	165J2A22	2N.O. & N.C.	Maintained, key pull left
164J2A33	165J2A33	3N.O. & N.C.	Maintained, key pull left
164J2B11	165J2B11	1N.O. & N.C.	Maintained, key pull both
164J2B22	165J2B22	2N.O. & N.C.	Maintained, key pull both
164J2B33	165J2B33	3N.O. & N.C.	Maintained, key pull both
164J0A11		1N.O. & N.C.	Momentary right, key pull left
164J0A22		2N.O. & N.C.	Momentary right, key pull left
164J0A33		3N.O. & N.C.	Momentary right, key pull left

3 Position Keylocks

Non-Oiltight	Oiltight	Contact	Action
164J3A22	165J3A2	2N.O. & N.C.	Maintained, key pull left
164J3A33	165J3A33	3N.O. & N.C.	Maintained, key pull left
164J3E22	165J3E22	2N.O. & N.C.	Maintained, key pull center
164J3E33	165J3E33	3N.O. & N.C.	Maintained, key pull center
164J3C22	165J3C22	2N.O. & N.C.	Maintained, key pull all
164J3C33	165J3C33	3N.O. & N.C.	Maintained, key pull all
164J7A22	165J7A22	2N.O. & N.C.	Momentary right, key pull left

Application Note: Spare key part number for 164J-165J Series is **164KA**

For complete product information, order Catalog 1308390

Products for Industrial & Commercial Applications

Dimensions are shown for reference purposes only.

Dimensions are in inches and millimeters unless otherwise specified. Values in brackets are metric equivalents.

Specifications subject to change.

Technical Support Center
1-800-522-6752
www.tycoelectronics.com

Pilot Light Indicators or Lens Sets, 16mm

FEATURES

Command Series Pilot Light Indicators match the appearance of both lighted and unlighted Command Series pushbuttons. The same lens buttons are snapped into place and legends may be easily inserted. Illumination is from T - 1 3/4 midget flange based lamps, which are installed from the front panel. Lenses and lamps are ordered separately and be sure to specify color. Oiltight models meet NEMA 1, 12 & 13 requirements. UL File No. E-51302
CSA LR-20479

TYPICAL PERFORMANCE CHARACTERISTICS:

LAMP DISSIPATION 1.2W MAX.
Insulation Resistance .....100 Megohms min.
Dielectric Strength .....1,500 VAC

ENVIRONMENTAL SPECIFICATIONS:

Operating Temperature.....-4°F to +122°F (-20°C to +50°C)

PILOT LIGHT INDICATORS



164EZ

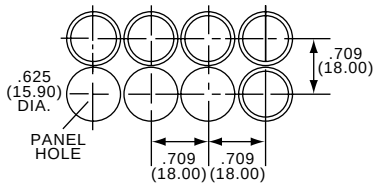

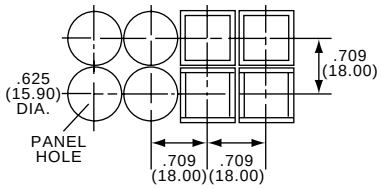

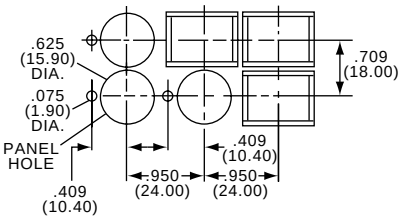

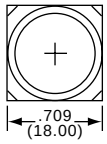

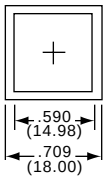

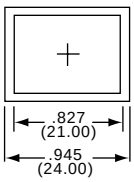

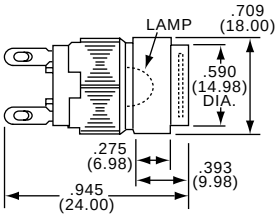

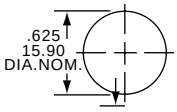

Non-Oiltight	Oiltight	Description
164EZ	165EZ	Round
164SZ	165SZ	Square
164TZ	165TZ	Rectangular

Lens set and lamp not supplied, order separately, see below.
U.L. Recognized E-51302

LENS SET



64E

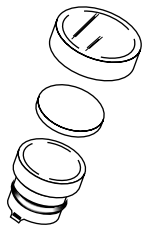

64E

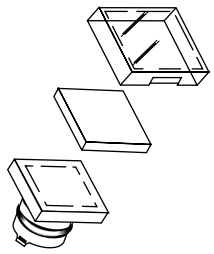

64S

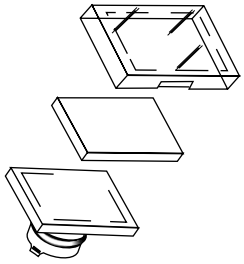

64T

Model	Description
64E(*)	Round lens set
64S(*)	Square lens set
64T(*)	Rectangular lens set

All fit oiltight and non-oiltight indicators.
(*) Specify color by adding suffix number: (2) Red, (3) Orange, (4) Yellow, (5) Green, (6) Blue, (9) White/Clear.

Application Note:
Lens sets include, button, diffuser and cap.

Knobs, Machined Aluminum

K SERIES



K700B1/4

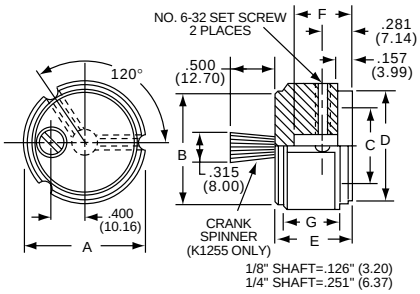

3 Flute Design with and without Indicator Line

Model	Color	A	B	C	D	E	F	G
K500A1/8	Natural	.500(12.7)	.430(10.9)	.374(9.50)	.430(10.9)	.625(15.9)	.429(10.9)	.512(13.0)
K500A1/4	Natural	.500(12.7)	.430(10.9)	.374(9.50)	.430(10.9)	.625(15.9)	.429(10.9)	.512(13.0)
K500B1/8	Black	.500(12.7)	.430(10.9)	.374(9.50)	.430(10.9)	.625(15.9)	.429(10.9)	.512(13.0)
K500B1/4	Black	.500(12.7)	.430(10.9)	.374(9.50)	.430(10.9)	.625(15.9)	.429(10.9)	.512(13.0)
K700A1/4	Natural	.740(18.8)	.655(16.6)	.591(15.0)	.655(16.6)	.625(15.9)	.429(10.9)	.512(13.0)
K700B1/4	Black	.740(18.8)	.655(16.6)	.591(15.0)	.655(16.6)	.625(15.9)	.429(10.9)	.512(13.0)
K900A1/4	Natural	.937(23.8)	.817(20.8)	.709(18.0)	.817(20.8)	.625(15.9)	.429(10.9)	.512(13.0)
K900B1/4	Black	.937(23.8)	.817(20.8)	.709(18.0)	.8827(20.8)	.625(15.9)	.429(10.9)	.512(13.0)
K1250A1/4	Natural	1.25(31.8)	1.11(28.2)	.984(25.0)	1.11(28.2)	.750(19.1)	.554(14.1)	.630(16.00)
K1250B1/4	Black	1.25(31.8)	1.11(28.2)	.984(25.0)	1.11(28.2)	.750(19.1)	.554(14.1)	.630(16.00)
Less Indicator								
K1251A1/4	Natural	1.25(31.8)	1.11(28.2)	.984(25.0)	1.11(28.2)	.750(19.1)	.554(14.1)	.630(16.00)
K1251B1/4	Black	1.25(31.8)	1.11(28.2)	.984(25.0)	1.11(28.2)	.750(19.1)	.554(14.1)	.630(16.00)
With Crank Spinner + Less Indicator								
K1255AS1/4	Natural	1.25(21.8)	1.11(28.2)	.984(25.0)	1.11(28.2)	.750(19.1)	.554(14.1)	.630(16.00)
K1255BS1/4	Black	1.25(31.8)	1.11(28.2)	.984(25.0)	1.11(28.2)	.750(19.1)	.554(14.1)	.630(16.00)

KA SERIES



KA500A1/4



KA700B1/4

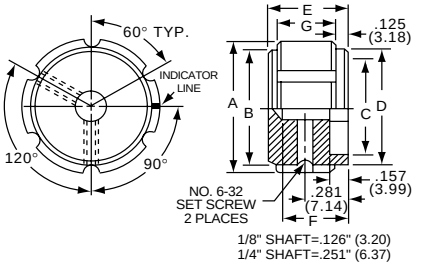

6 Flute Design with Indicator Line

Model	Color	A	B	C	D	E	F	G
KA500A1/8	Natural	.500(12.7)	.430(10.9)	.375(9.53)	.430(10.9)	.625(15.9)	.512(13.0)	.430(10.9)
KA500A1/4	Natural	.500(12.7)	.430(10.9)	.375(9.53)	.430(10.9)	.625(15.9)	.512(13.0)	.430(10.9)
KA500B1/8	Black	.500(12.7)	.430(10.9)	.375(9.53)	.430(10.9)	.625(15.9)	.512(13.0)	430(10.9)
KA500B1/4	Black	.500(12.7)	.430(10.9)	.375(9.53)	.430(10.9)	.625(15.9)	.512(13.0)	430(10.9)
KA700A1/4	Natural	.750(19.1)	.655(16.6)	.590(15.0)	.655(16.6)	.625(15.9)	.512(13.0)	.430(10.9)
KA700B1/4	Black	.750(19.1)	.655(16.6)	.590(15.0)	.655(16.6)	.625(15.9)	.512(13.0)	.430(10.9)
KA900A1/4	Natural	.937(28.8)	.817(20.8)	.700(17.8)	.817(20.8)	.625(15.9)	.512(13.0)	.430(10.9)
KA900B1/4	Black	.937(28.8)	.817(20.8)	.700(17.8)	.817(20.8)	.625(15.9)	.512(13.0)	.430(10.9)
KA1250A1/4	Natural	1.25(31.8)	1.11(28.2)	.985(25.0)	1.11(28.2)	.750(19.1)	.630(16.0)	.554(14.1)
KA1250B1/4	Black	1.25(31.8)	1.11(28.2)	.985(25.0)	1.11(28.2)	.750(19.1)	.630(16.0)	.554(14.1)

KAS SERIES

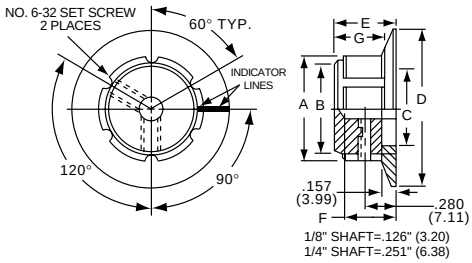

6 Flute Design with Aluminum Skirt and Indicator Lines

Model	Color	A	B	C	D	E	F	G
KAS500A1/8	Natural	.500(12.7)	.430(10.9)	.380(9.65)	.740(18.8)	.630(16.0)	.510(13.0)	.430(10.9)
KAS500A1/4	Natural	.500(12.7)	.430(10.9)	.380(9.65)	.740(18.8)	.630(16.0)	.510(13.0)	.430(10.9)
KAS500B1/8	Black	.500(12.7)	.430(10.9)	.380(9.65)	.740(18.8)	.630(16.0)	.510(13.0)	.430(10.9)
KAS500B1/4	Black	.500(12.7)	.430(10.9)	.380(9.65)	.740(18.8)	.630(16.0)	.510(13.0)	.430(10.9)
KAS700A1/4	Natural	.750(19.1)	.650(16.5)	.590(15.0)	1.14(29.0)	.630(16.0)	.510(13.0)	.430(10.9)
KAS700B1/4	Black	.750(19.1)	.650(16.5)	.590(15.0)	1.14(29.0)	.630(16.0)	.510(13.0)	.430(10.9)
KAS900A1/4	Natural	.940(23.9)	.820(20.8)	.710(18.0)	1.40(35.6)	.630(16.0)	.510(13.0)	.430(10.9)
KAS900B1/4	Black	.940(23.9)	.820(20.8)	.710(18.0)	1.40(35.6)	.630(16.0)	.510(13.0)	.430(10.9)

For complete product information,
order Catalog 1308390

Products for Industrial & Commercial Applications

Dimensions are shown for reference purposes only.

Dimensions are in inches and millimeters unless otherwise specified. Values in brackets are metric equivalents.

Specifications subject to change.

Technical Support Center
1-800-522-6752
www.tycoelectronics.com

Knobs, Machined Aluminum

KB SERIES



KB500A1/4



KB900B1/4

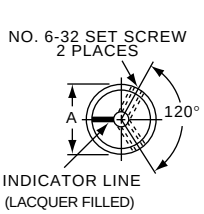

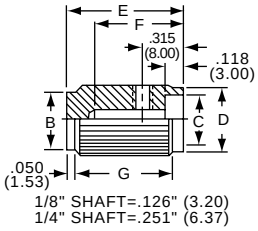

Control Knob with Straight Knurl and Top Line Indicator

Model	Color	A	B	C	D	E	F	G
KB500A1/8	Natural	.500(12.7)	.433(11.0)	.394(10.0)	.472(12.0)	.787(20.0)	.630(16.0)	.610(15.5)
KB500A1/4	Natural	.500(12.7)	.433(11.0)	.394(10.0)	.472(12.0)	.787(20.0)	.630(16.0)	.610(15.5)
KB500B1/8	Black	.500(12.7)	.433(11.0)	.394(10.0)	.472(12.0)	.787(20.0)	.630(16.0)	.610(15.5)
KB500B1/4	Black	.500(12.7)	.433(11.0)	.394(10.0)	.472(12.0)	.787(20.0)	.630(16.0)	.610(15.5)
KB700A1/4	Natural	.750(19.0)	.673(17.1)	.581(15.0)	.705(17.9)	.787(20.0)	.630(16.0)	.610(15.5)
KB700B1/4	Black	.750(19.0)	.673(17.1)	.581(15.0)	.705(17.9)	.787(20.0)	.630(16.0)	.610(15.5)
KB900A1/4	Natural	.930(23.6)	.866(22.0)	.710(18.0)	.902(22.9)	.787(20.0)	.630(16.0)	.610(15.5)
KB900B1/4	Black	.930(23.6)	.866(22.0)	.710(18.0)	.902(22.9)	.787(20.0)	.630(16.0)	.610(15.5)

KBS SERIES



KBS500A101/4

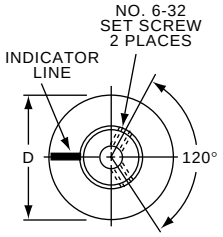

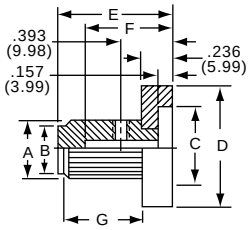

Control Knob with Straight Knurl and Skirt

Model	Color	A	B	C	D	E	F	G
With 0-9 Numerals (36°)								
KBS500A101/8	Natural	.500(12.7)	.433(11.0)	.708(18.0)	1.00(25.4)	.950(24.1)	.826(21.0)	.655(16.7)
KBS500A101/4	Natural	.500(12.7)	.433(11.0)	.708(18.0)	1.00(25.4)	.950(24.1)	.826(21.0)	.655(16.7)
KBS500B101/8	Black	.500(12.7)	.433(11.0)	.708(18.0)	1.00(25.4)	.950(24.1)	.826(21.0)	.655(16.7)
KBS500B101/4	Black	.500(12.7)	.433(11.0)	.708(18.0)	1.00(25.4)	.950(24.1)	.826(21.0)	.655(16.7)

KCB SERIES



KCB500A1/4



KCB700B1/4

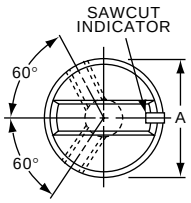

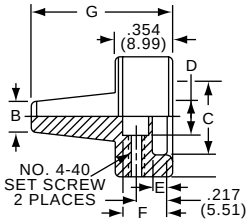

Control Knob with Sawcut Indicator

Model	Color	A	B	C	D	E	F	G
KCB500A1/8	Natural	.500(12.7)	.197(5.08)	.374(9.50)	.126(3.20)	.118(3.00)	.335(8.51)	.750(19.1)
KCB500A1/4	Natural	.500(12.7)	.197(5.08)	.374(9.50)	.252(6.40)	.118(3.00)	.335(8.51)	.750(19.1)
KCB500B1/8	Black	.500(12.7)	.197(5.08)	.374(9.50)	.126(3.20)	.118(3.00)	.335(8.51)	.750(19.1)
KCB500B1/4	Black	.500(12.7)	.197(5.08)	.374(9.50)	.252(6.40)	.118(3.00)	.335(8.51)	.750(19.1)
KCB600A1/8	Natural	.618(15.7)	.197(5.08)	.394(10.0)	.126(3.20)	.118(3.00)	.335(8.51)	.750(19.1)
KCB600A1/4	Natural	.618(15.7)	.197(5.08)	.39410.0)	.252(6.40)	.118(3.00)	.335(8.51)	.750(19.1)
KCB600B1/8	Black	.618(15.7)	.197(5.08)	.394(10.0)	.126(3.20)	.118(3.00)	.335(8.51)	.750(19.1)
KCB600B1/4	Black	.618(15.7)	.197(5.08)	.394(10.0)	.252(6.40)	.118(3.00)	.335(8.51)	.750(19.1)
KCB700A1/4	Natural	.746(18.8)	.197(5.08)	.512(13.0)	.250(6.35)	.118(3.00)	.335(8.51)	.898(22.8)
KCB700B1/4	Black	.746(18.8)	.197(5.08)	.512(13.0)	.250(6.35)	.118(3.00)	.335(8.51)	.898(22.8)
KCB900A1/4	Natural	.937(23.8)	.197(5.08)	.709(18.0)	.250(6.35)	.118(3.00)	.335(8.51)	.898(22.8)
KCB900B1/4	Black	.937(23.8)	.197(5.08)	.709(18.0)	.250(6.35)	.118(3.00)	.335(8.51)	.898(22.8)

Products for Industrial & Commercial Applications

Dimensions are shown for reference purposes only.

Dimensions are in inches and millimeters unless otherwise specified. Values in brackets are metric equivalents.

Specifications subject to change.

Technical Support Center
1-800-522-6752
www.tycoelectronics.com

Knobs, Machined Aluminum

KD SERIES



KD1250B1/4

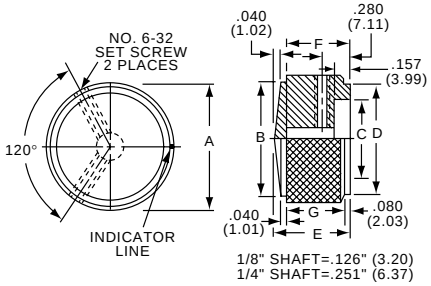

Diamond Knurl with Indicator Line

Model	Color	A	B	C	D	E	F	G
KD500A1/8	Natural	.500(12.7)	.430(10.9)	.380(9.65)	.430(10.9)	.630(16.0)	.510(13.0)	.470(11.9)
KD500A1/4	Natural	.500(12.7)	.430(10.9)	.380(9.65)	.430(10.9)	.630(16.0)	.510(13.0)	.470(11.9)
KD500B1/8	Black	.500(12.7)	.430(10.9)	.380(9.65)	.430(10.9)	.630(16.0)	.510(13.0)	.470(11.9)
KD500B1/4	Black	.500(12.7)	.430(10.9)	.380(9.65)	.430(10.9)	.630(16.0)	.510(13.0)	.470(11.9)
KD700A1/4	Natural	.750(19.1)	.660(16.8)	.590(15.0)	.660(16.8)	.630(16.0)	.510(13.0)	.470(11.9)
KD700B1/4	Black	.750(19.1)	.660(16.8)	.590(15.0)	.660(16.8)	.630(16.0)	.510(13.0)	.470(11.9)
KD900A1/4	Natural	.940(23.9)	.820(20.8)	.710(18.0)	.820(20.8)	.630(16.0)	.510(13.0)	.470(11.9)
KD900B1/4	Black	.940(23.9)	.820(20.8)	.710(18.0)	.820(20.8)	.630(16.0)	.510(13.0)	.470(11.9)
KD1250A1/4	Natural	1.25(31.8)	1.11(28.2)	.980(24.9)	1.11(28.2)	.750(19.1)	.630(16.0)	.590(15.0)
KD1250B1/4	Black	1.25(31.8)	1.11(28.2)	.980(24.9)	1.11(28.2)	.750(19.1)	.630(16.0)	.590(15.0)

KE SERIES



KE900AB1/4

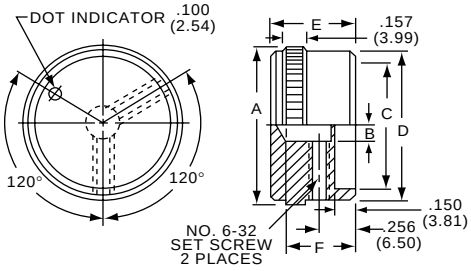



KE500AB1/4

Knurl Grip with Top Dot Indicator

Model	Color	A	B	C	D	E	F
KE500AB1/8	Ntl.- Blk.	.500(12.7)	.126(3.20)	.382(9.70)	.460(11.7)	.625(15.9)	.512(13.0)
KE500AB1/4	Ntl.- Blk.	.500(12.7)	.126(3.20)	.382(9.70)	.460(11.7)	.62515.9)	.512(13.0)
KE700AB1/4	Ntl. - Blk.	.740(18.8)	.251(6.38)	.630(16.0)	.708(18.0)	.625(15.9)	.512(13.0)
KE900AB1/4	Ntl. - Blk.	.93(23.8)	.251(6.38)	.787(20.0)	.900(22.9)	.625(15.9)	.512(13.0)
KE1250AB1/4	Ntl. - Blk.	1.25(31.8)	.251(6.38)	1.06(26.9)	1.17(29.7)	.625(15.9)	.512(13.0)

KES SERIES



KES500AB1/4

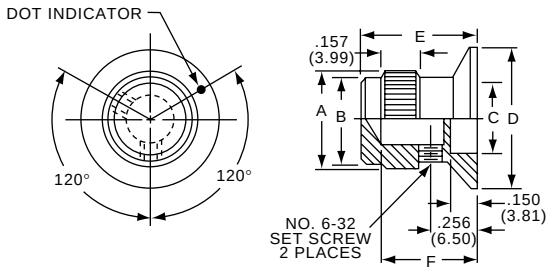

Knurl Grip with Dot Indicator on Skirt

Model	Color	A	B	C	D	E	F
KES500AB1/8	Ntl. - Blk.	.500(12.7)	.460(11.7)	.382(9.70)	.750(19.1)	.625(15.9)	.512(13.0)
KES500AB1/4	Ntl. - Blk.	.500(12.7)	.460(11.7)	.382(9.70)	.750(19.1)	.625(15.9)	.512(13.0)
KES700AB1/4	Ntl. - Blk.	.750(19.1)	.710(18.1)	.630(16.0)	1.13(28.7)	.625(15.9)	.512(13.0)
KES900AB1/4	Ntl. - Blk.	.937(23.8)	.897(22.8)	.787(20.0)	1.44(36.6)	.625(15.9)	.512(13.0)

For complete product information,
order Catalog 1308390

Products for Industrial & Commercial Applications

Dimensions are shown for reference purposes only.

Dimensions are in inches and millimeters unless otherwise specified. Values in brackets are metric equivalents.

Specifications subject to change.

Technical Support Center
1-800-522-6752
www.tycoelectronics.com

Knobs, Machined Aluminum

KFS SERIES



KFS400B1/8

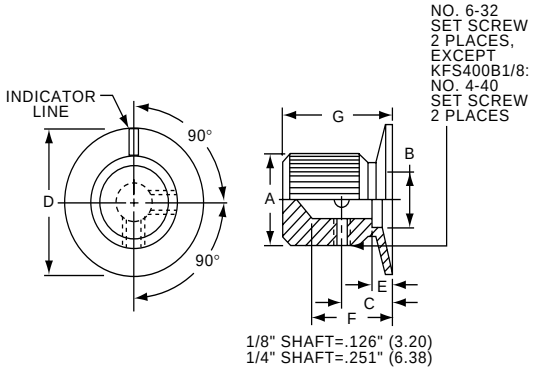

Straight Knurl with Indicator on Skirt

Model	Color	A	B	C	D	E	F	G
KFS400B1/8	Black Matte	.380(9.65)	.382(9.70)	.256(6.50)	.500(12.7)	.098(2.49)	.469(11.9)	0.591(15.0)
KFS500B1/8	Black Matte	..500(12.7)	.382(9.70)	.252(6.48)	.630(16.0)	.161(4.09)	.469(11.9)	.630(16.0)
KFS600B1/8	Black Matte	.618(15.7)	.280(7.11)	.382(9.70)	1.00(25.4)	.161(4.09)	.630(16.0)	0.811(20.6)

KHF SERIES



KHF500A1/4



KHF900A1/4

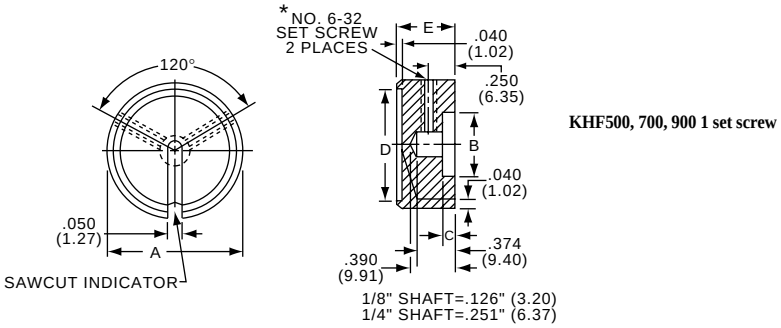

Plain Body with Top and Side Sawcut Indicator

Model	Color	A	B	C	D	E
KHF500A1/4	Natural	.500(12.7)	.374(9.50)	.118(3.00)	.342(8.69)	.563(14.3)
KHF700A1/4	Natural	.740(18.8)	.590(15.0)	.118(3.00)	.592(15.0)	.563(14.3)
KHF900A1/4	Natural	.937(23.8)	.708(18.0)	.118(3.00)	.779(19.8)	.563(14.3)
* KHF1250A1/4	Natural	1.23(31.8)	.984(25.0)	.118(3.00)	1.08(27.5)	.563(14.3)

KLN SERIES



KLN500A1/4

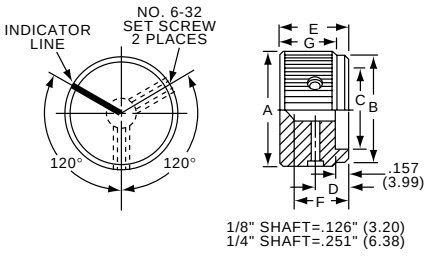

Straight Knurl with Top and Side Indicator

Model	Color	A	B	C	D	E	F	G
KLN500A1/8	Natural	.500(12.7)	0.445(11.3)	.374(9.50)	.281(7.14)	.625(15.9)	.512(13.0)	.527(13.4)
KLN500A1/4	Natural	.500(12.7)	0.445(11.3)	.374(9.50)	.281(7.14)	.625(15.9)	.512(13.0)	.527(13.4)
KLN500B1/8	Black	.500(12.7)	0.445(11.3)	.374(9.50)	.281(7.14)	.625(15.9)	.512(13.0)	.527(13.4)
KLN500B1/4	Black	.500(12.7)	0.445(11.3)	.374(9.50)	.281(7.14)	.625(15.9)	.512(13.0)	.527(13.4)
KLN500S1/8	Smoke	.500(12.7)	0.445(11.3)	.374(9.50)	.281(7.14)	.625(15.9)	.512(13.0)	.527(13.4)
KLN500S1/4	Smoke	.500(12.7)	0.445(11.3)	.374(9.50)	.281(7.14)	.625(15.9)	.512(13.0)	.527(13.4)
KLN700A1/4	Natural	.740(18.8)	.685(17.4)	.591(15.0)	.281(7.14)	.625(15.9)	.512(13.0)	.527(13.4)
KLN700B1/4	Black	.740(18.8)	.685(17.4)	.591(15.0)	.281(7.14)	.625(15.9)	.512(13.0)	.527(13.4)
KLN700S1/4	Smoke	.740(18.8)	.685(17.4)	.591(15.0)	.281(7.14)	.625(15.9)	.512(13.0)	.527(13.4)
KLN900A1/4	Natural	.937(23.8)	.882(22.4)	0.709(18.0)	.281(7.14)	.625(15.9)	.512(13.0)	.527(13.4)
KLN900B1/4	Black	.937(23.8)	.882(22.4)	0.709(18.0)	.281(7.14)	.625(15.9)	.512(13.0)	.527(13.4)
KLN900S1/4	Smoke	.937(23.8)	.882(22.4)	0.709(18.0)	.281(7.14)	.625(15.9)	.512(13.0)	.527(13.4)
KLN1250A1/4	Natural	1.25(31.8)	1.20(30.5)	.984(25.0)	.281(7.14)	.625(15.9)	.512(13.0)	.527(13.4)
KLN1250B1/4	Black	1.25(31.8)	1.20(30.5)	.984(25.0)	.281(7.14)	.625(15.9)	.512(13.0)	.527(13.4)
KLN1250S1/4	Smoke	1.25(31.8)	1.20(30.5)	.984(25.0)	.281(7.14)	.625(15.9)	.512(13.0)	.527(13.4)

For complete product information, order Catalog 1308390

Products for Industrial & Commercial Applications

Dimensions are shown for reference purposes only.

Dimensions are in inches and millimeters unless otherwise specified. Values in brackets are metric equivalents.

Specifications subject to change.

Technical Support Center
1-800-522-6752
www.tycoelectronics.com

Knobs, Machined Aluminum

KLNS SERIES



KLNS500B1/8



KLNS900B1/4

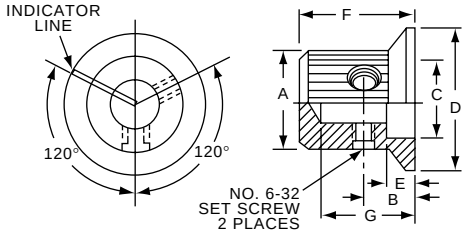

1/8" SHAFT=.126" (3.20)
1/4" SHAFT=.251" (6.37)

Straight Knurl with Indicator Line on Top, Side and Skirt

Model	Color	A	B	C	D	E	F	G
KLNS500A1/8	Natural	.500(12.7)	.280(7.11)	.380(9.65)	.750(19.0)	.160(4.07)	.630(16.0)	.510(13.0)
KLNS500A1/4	Natural	.500(12.7)	.280(7.11)	.380(9.65)	.750(19.0)	.160(4.07)	.630(16.0)	.510(13.0)
KLNS500B1/8	Black	.500(12.7)	.280(7.11)	.380(9.65)	.750(19.0)	.160(4.07)	.630(16.0)	.510(13.0)
KLNS500B1/4	Black	.500(12.7)	.280(7.11)	.380(9.65)	.750(19.0)	.160(4.07)	.630(16.0)	.510(13.0)
KLNS700A1/4	Natural	.750(19.0)	.280(7.11)	.590(14.9)	1.13(28.7)	.160(4.07)	.630(16.0)	.510(13.0)
KLNS700B1/4	Black	.750(19.0)	.280(7.11)	.590(14.9)	1.13(28.7)	.160(4.07)	.630(16.0)	.510(13.0)
KLNS900A1/4	Natural	.940(23.9)	.280(7.11)	.710(18.0)	1.40(35.5)	.160(4.07)	.630(16.0)	.510(13.0)
KLNS900B1/4	Black	.940(23.9)	.280(7.11)	.710(18.0)	1.40(35.5)	.160(4.07)	.630(16.0)	.510(13.0)

KN SERIES



KN501A1/4

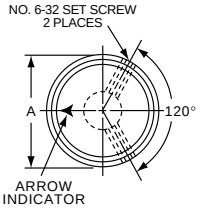

1/8" SHAFT=.126" (3.20)
1/4" SHAFT=.251" (6.38)

Straight Knurl with Arrowhead Indicator

Model	Color	A	B	C	D	E	F	G
KN501A1/8	Natural	.500(12.7)	.445(11.3)	.374(9.50)	.445(11.3)	.625(15.9)	.512(13.0)	.956(24.28)
KN501A1/4	Natural	.500(12.7)	.445(11.3)	.374(9.50)	.445(11.3)	.625(15.9)	.512(13.0)	.956(24.28)
KN501B1/8	Black	.500(12.7)	.445(11.3)	.374(9.50)	.445(11.3)	.625(15.9)	.512(13.0)	.956(24.28)
KN501B1/4	Black	.500(12.7)	.445(11.3)	.374(9.50)	.445(11.3)	.625(15.9)	.512(13.0)	.956(24.28)
KN701A1/4	Natural	.750(19.1)	.695(17.7)	.590(15.0)	695(17.7)	.625(15.9)	.512(13.0)	.956(24.28)
KN701B1/4	Black	.750(19.1)	.695(17.7)	.590(15.0)	695(17.7)	.625(15.9)	.512(13.0)	.956(24.28)
Two Toned	**Body-Top**							
KN501BA1/8	Blk. - Ntl.	.500(12.7)	.445(11.3)	.374(9.50)	.445(11.3)	.625(15.9)	.512(13.0)	.956(24.28)
KN501BA1/4	Blk. - Ntl.	.500(12.7)	.445(11.3)	.374(9.50)	.445(11.3)	.625(15.9)	.512(13.0)	.956(24.28)
KN701BA1/8	Blk. - Ntl.	.750(19.1)	.695(17.7)	.590(15.0)	695(17.7)	.625(15.9)	.512(13.0)	.956(24.28)
KN701BA1/4	Blk. - Ntl.	.750(19.1)	.695(17.7)	.590(15.0)	695(17.7)	.625(15.9)	.512(13.0)	.956(24.28)

KN SERIES



KN1751AS1/4



KN1751B1/4

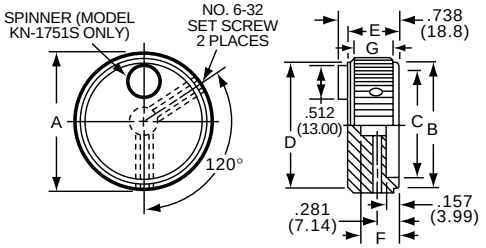

1/4" SHAFT=.251" (6.38)

Straight Knurl with & without "Fingertip" Spinner

Model	Color	A	B	C	D	E	F	G
Less Indicator								
KN1751A1/4	Natural	1.75(44.5)	1.55(39.4)	1.38(35.1)	1.65(41.9)	.620(15.0)	.508(12.9)	.480(12.2)
KN1751B1/4	Black	1.75(44.5)	1.55(39.4)	1.38(35.1)	1.65(41.9)	.620(15.8)	.508(12.9)	.480(12.2)
	Body - Top							
KN1751AB1/4	Ntl. - Blk.	1.75(44.5)	1.55(39.4)	1.38(35.1)	1.65(41.9)	.620(15.8)	.508(12.9)	.480(12.2)
KN1751BB1/4	Blk. - Natural	1.75(44.5)	1.55(39.4)	1.38(35.1)	1.65(41.9)	.620(15.8)	.508(12.9)	.480(12.2)
With Indicator								
KN1750A1/4	Natural	1.75(44.5)	1.55(39.4)	1.38(35.1)	1.65(41.9)	.620(15.8)	.508(12.9)	.480(12.2)
KN1750B1/4	Black	1.75(44.5)	1.55(39.4)	1.38(35.1)	1.65(41.9)	.620(15.8)	.508(12.9)	.480(12.2)
With Spinner/Less Indicator								
KN1751AS1/4	Natural	1.75(44.5)	1.55(39.4)	1.38(35.1)	1.65(41.9)	.620(15.8)	.508(12.9)	.480(12.2)
KN1751BS1/4	Black	1.75(44.5)	1.55(39.4)	1.38(35.1)	1.65(41.9)	.620(15.8)	.508(12.9)	.480(12.2)

For complete product information, order Catalog 1308390

Products for Industrial & Commercial Applications

Dimensions are shown for reference purposes only.

Dimensions are in inches and millimeters unless otherwise specified. Values in brackets are metric equivalents.

Specifications subject to change.

Technical Support Center
1-800-522-6752
www.tycoelectronics.com

Knobs, Machined Aluminum

KN SERIES



KN5700B1/4

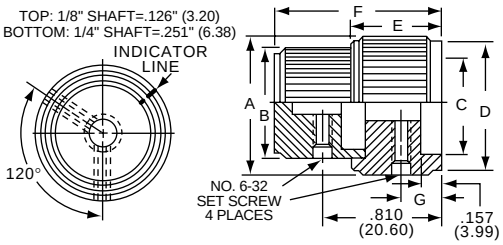

Concentric Set with Straight Knurl with Indicator Lines

Model	Color	A	B	C	D	E	F	G
KN5700A1/4	Natural	.750(19.1)	.500(12.7)	.590(15.0)	.700(17.8)	.625(15.9)	1.16(29.5)	.281(7.14)
KN5700B1/4	Black	.750(19.1)	.500(12.7)	.590(15.0)	.700(17.8)	.625(15.9)	1.16(29.5)	.281(7.14)

KN SERIES



KN500A1/4 KN900BA1/4

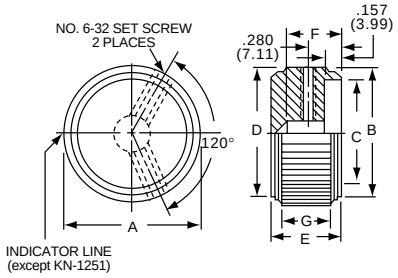

Straight Knurl with & without Indicator Line Diameter Dimensions

Model	Color Body-Top	A	B	C	D	E	F	G
KN500A1/8	Natural	.500(12.7)	.445(11.3)	.374(9.50)	.445(11.5)	.625(15.9)	.512(13.0)	.456(11.6)
KN500A1/4	Natural	.500(12.7)	.445(11.3)	.374(9.50)	.445(11.5)	.625(15.9)	.512(13.0)	.456(11.6)
KN500B1/8	Black	.500(12.7)	.445(11.3)	.374(9.50)	.445(11.5)	.625(15.9)	.512(13.0)	.456(11.6)
KN500B1/4	Black	.500(12.7)	.445(11.3)	.374(9.50)	.445(11.5)	.625(15.9)	.512(13.0)	.456(11.6)
KN700A1/4	Natural	.750(19.1)	.695(17.7)	.590(15.0)	.695(17.7)	.625(15.9)	.512(13.0)	.456(11.6)
KN700B1/4	Black	.750(19.1)	.695(17.7)	.590(15.0)	.695(17.7)	.625(15.9)	.512(13.0)	.456(11.6)
KN900A1/4	Natural	.949(24.1)	.894(22.7)	.696(17.7)	.894(22.7)	.625(15.9)	.512(13.0)	.456(11.6)
KN900B1/4	Black	.949(24.1)	.894(22.7)	.696(17.7)	.894(22.7)	.625(15.9)	.512(13.0)	.456(11.7)
KN1250A1/8	Natural	1.25(31.8)	1.20(30.5)	.984(25.0)	1.20(30.5)	.625(15.9)	.512(13.0)	.456(11.6)
KN1250B1/4	Black	1.25(31.8)	1.20(30.5)	.984(25.0)	1.20(30.5)	.625(15.9)	.512(13.0)	.456(11.6)
Two-Toned								
KN500AB1/8	Ntl - Blk.	.500(12.7)	.445(11.3)	.374(9.50)	.445(11.5)	.625(15.9)	.512(13.0)	.456(11.6)
KN500AB1/4	Ntl - Blk..	.500(12.7)	.445(11.3)	.374(9.50)	.445(11.5)	.625(15.9)	.512(13.0)	.456(11.6)
KN500BA1/8	Blk. - Ntl.	.500(12.7)	.445(11.3)	.374(9.50)	.445(11.5)	.625(15.9)	.512(13.0)	.456(11.6)
KN500BA1/4	Blk. - Ntl.	.500(12.7)	.445(11.3)	.374(9.50)	.445(11.5)	.625(15.9)	.512(13.0)	.456(11.6)
KN700AB1/4	Ntl - Blk..	.750(19.1)	.695(17.7)	445(11.5)	.695(17.7)	.625(15.9)	.512(13.0)	.456(11.6)
KN700BA1/4	Blk. - Ntl.	.750(19.1)	.695(17.7)	445(11.5)	.695(17.7)	.625(15.9)	.512(13.0)	.456(11.6)
KN900AB1/4	Ntl - Blk..	.949(24.1)	.89422.7)	.695(17.7)	..894(22.7)	.625(15.9)	.512(13.0)	.456(11.6)
KN900BA1/4	Blk. - Ntl.	.949(24.1)	.894(22.7)	.695(17.7)	.894(22.7)	.625(15.9)	.512(13.0)	.456(11.7)
KN1250AB1/4	Ntl - Blk..	1.25(31.8)	1.20(30.5)	.984(25.0)	1.20(30.5)	.625(15.9)	.512(13.0)	.456(11.6)
KN1250BA1/4	Blk. - Ntl.	1.25(31.8)	1.20(30.5)	.984(25.0)	1.20(30.5)	.625(15.9)	.512(13.0)	.456(11.6)
Less Indicator								
KN1251A1/4	Natural	1.25(31.8)	1.20(30.5)	.984(25.0)	1.25(31.7)	.625(15.9)	.512(13.0)	.456(11.7)
KN1251B1/4	Black	1.25(31.8)	1.20(30.5)	.984(25.0)	1.25(31.7)	.625(15.9)	.512(13.0)	.456(11.7)

KN SERIES



KN1755BS1/4

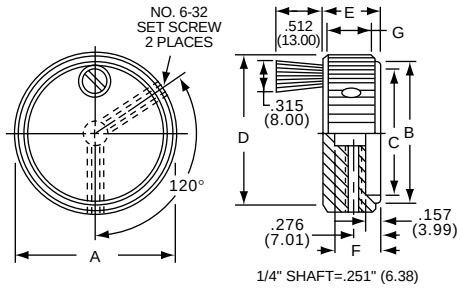

Straight Knurl with "Crank" Spinner

Model	Color Body-Top/Spin	A	B	C	D	E	F	G
KN1755AS1/4	Natural	1.76(44.7)	1.56(39.5	.138(35.0)	1.65(41.8)	.630(16.0)	.512(13.0)	.492(12.5)
KN1755BS1/4	Black	1.76(44.7)	1.56(39.5)	.138(35.0)	1.65(41.8)	.630(16.0)	.512(13.0)	.492(12.5)
KN1755ABS1/4	Ntl.-Blk./Blk.	1.76(44.7)	1.56(39.5)	1.38(35.0)	1.65(41.8)	.630(16.0)	.512(13.0)	.492(12.5)
KN1755BAS1/4	Blk.-Ntl. Blk.	1.76(44.7)	1.56(39.5)	1.38(35.0)	1.65(41.8)	.630(16.0)	.512(13.0)	.492(12.5)

For complete product information, order Catalog 1308390

Products for Industrial & Commercial Applications

Dimensions are shown for reference purposes only.

Dimensions are in inches and millimeters unless otherwise specified. Values in brackets are metric equivalents.

Specifications subject to change.

Technical Support Center
1-800-522-6752
www.tycoelectronics.com

Knobs, Machined Aluminum

KNS SERIES



KNS501A1/4



KNS701B1/4

KNS701BA1/4



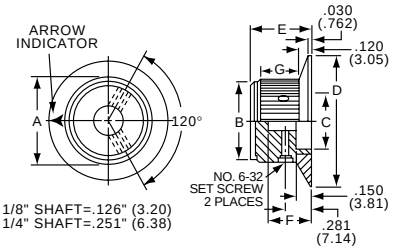

Straight Knurl with Arrowhead Indicator on Skirt

Model	Color	A	B	C	D	E	F	G
KNS501A1/8	Natural	.500(12.7)	.445(11.3)	.370(9.40)	.750(19.1)	.625(15.9)	.512(13.0)	.428(10.9)
KNS501A1/4	Natural	.500(12.7)	.445(11.3)	.370(9.40)	.750(19.1)	.625(15.9)	.512(13.0)	.428(10.9)
KNS501B1/8	Black	.500(12.7)	.445(11.3)	.370(9.40)	.750(19.1)	.625(15.9)	.512(13.0)	.428(10.9)
KNS501B1/4	Black	.500(12.7)	.445(11.3)	.370(9.40)	.750(19.1)	.625(15.9)	.512(13.0)	.428(10.9)
KNS701A1/4	Natural	.750(19.1)	.695(17.7)	.590(15.0)	1.12(28.5)	.625(15.9)	.512(13.0)	.428(10.9)
KNS701B1/4	Black	.750(19.1)	.695(17.7)	.590(15.0)	1.12(28.5)	.625(15.9)	.512(13.0)	.428(10.9)
Two-Toned	**Body-Top/Skirt**							
KNS501BA1/8	Blk.- Ntl.	.500(12.7)	.695(17.7)	.370(9.40)	.750(19.1)	.625(15.9)	.512(13.0)	.428(10.9)
KNS501BA1/4	Blk.- Ntl.	.500(12.7)	.695(17.7)	.370(9.40)	.750(19.1)	.625(15.9)	.512(13.0)	.428(10.9)
KNS701BA1/8	Blk. - Ntl.	.750(19.1)	.695(17.7)	.590(15.0)	1.12(28.5)	.625(15.9)	.512(13.0)	.428(10.9)
KNS701BA1/4	Blk.- Ntl.	.750(19.1)	.695(17.7)	.590(15.0)	1.12(28.5)	.625(15.9)	.512(13.0)	.428(10.9)

KPN SERIES



KPN500B1/8

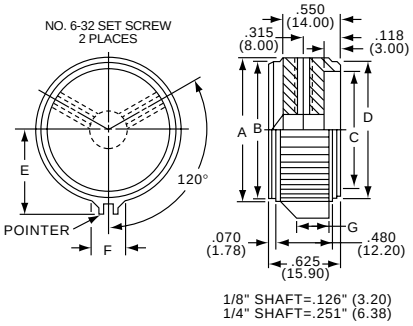

Straight Knurl with Pointer and Indicator Line

Model	Color Body-Top	A	B	C	D	E	F	G
KPN500A1/8	Natural	.500(12.7)	.445(11.3)	.372(9.45)	.445(11.3)	.368(9.35)	.195(4.95)	.354(8.99)
KPN500A1/4	Natural	.500(12.7)	.445(11.3)	.372(9.45)	.445(11.3)	.368(9.35)	.195(4.95	.354(8.99)
KPN500B1/8	Black	.500(12.7)	.445(11.3)	.372(9.45)	.445(11.3)	.368(9.35)	.195(4.95	.354(8.99)
KPN500B1/4	Black	.500(12.7)	.445(11.3)	.372(9.45)	.445(11.3)	.368(9.35)	.195(4.95	.354(8.99)
KPN700A1/4	Natural	.750(19.1)	.445(11.3)	.590(15.0)	.695(17.7)	.515(13.1)	.234(5.99)	.394(10.0)
KPN700B1/4	Black	.750(19.1)	.445(11.3)	.590(15.0)	.695(17.7)	.515(13.1)	.234(5.99)	.394(10.0)
KPN900A1/4	Natural	.937(23.8)	.445(11.3)	.692(17.6)	.882(22.4)	.630(16.0)	.276(7.01)	.354(8.99)
KPN900B1/4	Black	.937(23.8)	.445(11.3)	.692(17.6)	.882(22.4)	.630(16.0)	.276(7.01)	.354(8.99)

KS SERIES



KS500A1/4

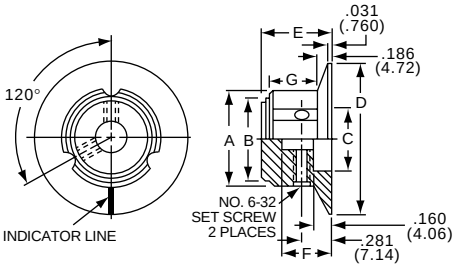



KS900B1/4

3 Flute Design with Aluminum Skirt and Indicator Line

Model	Color	A	B	C	D	E	F	G
KS500A1/8	Natural	.500(12.7)	.430(10.9)	.360(9.14)	.750(19.1)	.620(15.8)	.510(13.0)	.430(10.9)
KS500A1/4	Natural	.500(12.7)	.430(10.9)	.360(9.14)	.750(19.1)	.620(15.8)	.510(13.0)	.430(10.9)
KS500B1/8	Black	.500(12.7)	.430(10.9)	.360(9.14)	.750(19.1)	.620(15.8)	.510(13.0)	.430(10.9)
KS500B1/4	Black	.500(12.7)	.430(10.9)	.360(9.14)	.750(19.1)	.620(15.8)	.510(13.0)	.430(10.9)
KS700A1/4	Natural	.750(19.0)	.650(16.5)	.590(14.9)	1.12(28.4)	.620(15.8)	.510(13.0)	.430(10.9)
KS700B1/4	Black	.750(19.0)	.650(16.5)	.590(14.9)	1.12(28.4)	.620(15.8)	.510(13.0)	.430(10.9)
KS900A1/4	Natural	.940(23.9)	.820(20.8)	.710(18.0)	1.40(35.6)	.620(15.8)	.510(13.0)	.430(10.9)
KS900B1/4	Black	.940(23.9)	.820(20.8)	.710(18.0)	1.40(35.6)	.620(15.8)	.510(13.0)	.430(10.9)

For complete product information, order Catalog 1308390

Products for Industrial & Commercial Applications

Dimensions are shown for reference purposes only.

Dimensions are in inches and millimeters unless otherwise specified. Values in brackets are metric equivalents.

Specifications subject to change.

Technical Support Center
1-800-522-6752
www.tycoelectronics.com

Knobs, Machined Aluminum

KT SERIES



KT500A1/4



KT700A1/4

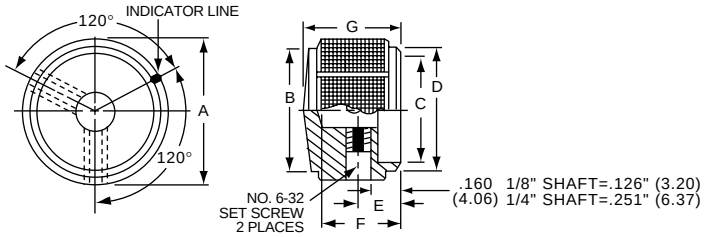

Square Serration with Indicator Line

Model	Color	A	B	C	D	E	F	G
KT500A1/8	Natural	.500(12.7)	.430(10.9)	.375(9.53)	.430(10.9)	.280(7.11)	.510(13.0)	.630(16.0)
KT500A1/4	Natural	.500(12.7)	.430(10.9)	.375(953)	.430(10.9)	.280(7.11)	.510(13.0)	.630(16.0)
KT500B1/8	Black	.500(12.7)	.430(10.9)	.375(9.53)	.430(10.9)	.280(7.11)	.510(13.0)	.630(16.0)
KT500B1/4	Black	.500(12.7)	.430(10.9)	.375(9.53)	.430(10.9)	.280(7.11)	.510(13.0)	.630(16.0)
KT700A1/4	Natural	.740(18.8)	.650(16.5)	.590(15.0)	.650(16.5)	.280(7.11)	.510(13.0)	.630(16.0)
KT700B1/4	Black	740(18.8)	.650(16.5)	.590(15.0)	.650(16.5)	.280(7.11)	.510(13.0)	.630(16.0)
KT900A1/4	Natural	.940(23.9)	.816(20.7)	.710(18.0)	.816(20.7)	.280(7.11)	.510(13.0)	.630(16.0)
KT900B1/4	Black	.940(23.9)	.816(20.7)	.710(18.0)	.816(20.7)	.280(7.11)	.510(13.0)	.630(16.0)
KT1250A1/4	Natural	1.25(31.8)	1.12(28.5)	.985(25.0)	1.12(28.5)	.280(7.11)	.630(16.0)	.750(19.01)
KT1250B1/4	Black	1.25(31.8)	1.12(28.5)	.985(25.0)	1.12(28.5)	.280(7.11)	.630(16.0)	.750(19.01)

KU SERIES

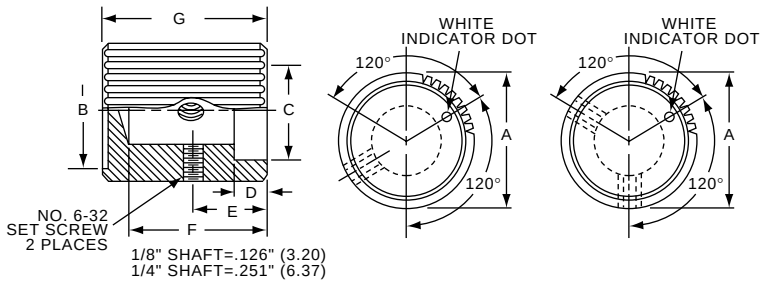

Note: KU401B1/8 and KU402B1/8 use one set screw only. Located 180° from indicator dot.

Serrated Diamond Trim Cut with Dot Indicator

Model	Color	A	B	C	D	E	F	G
KU401B1/8	Black	.374(9.50)	.283(7.19)	.276(7.01)	.098(2.49)	.177(4.50)	.236(5.99)	.299(7.60)
KU402B1/8	Black	.374(9.50)	.283(7.19)	.276(7.01)	.098(2.49)	.197(5.00)	.354(8.99)	.449(11.40)
KU500B1/8	Black	.500(12.7)	.409(10.4)	.374(9.50)	.118(3.00)	.276(7.01)	.512(13.0)	.598(15.2)
KU500B1/4	Black	.500(12.7)	.409(10.4)	.374(9.50)	.118(3.00)	.276(7.01)	.512(13.0)	.598(15.2)
KU700B1/4	Black	.740(18.8)	.650(16.5)	.591(15.0)	.118(3.00)	.276(7.01)	.512(13.0)	.598(15.2)

KUS SERIES



KUS402B1/8



KUS700B1/4

For complete product information, order Catalog 1308390

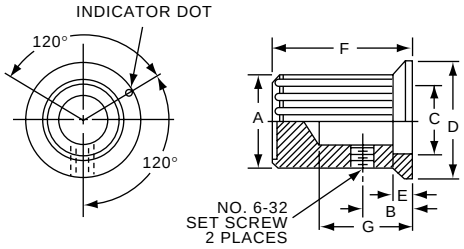

Serrated Diamond Trim Cut with Dot Indicator

Model	Color	A	B	C	D	E	F	G
KUS402B1/8	Black	.374(9.50)	.197(5.00)	.276(7.01)	.520(13.2)	.098(2.49)	.450(11.4)	.354(8.99)
KUS500B1/8	Black	.500(12.7)	.276(7.01	.374(9.50)	.700(17.8)	.118(3.00)	.600(15.2)	.512(13.0)
KUS500B1/4	Black	.500(12.7)	.276(7.01)	.374(9.50)	.700(17.8)	.118(3.00)	.600(15.2)	.512(13.0)
KUS700B1/4	Black	.740(18.8)	.276(7.01)	.591(15.0)	1.03(26.2)	.118(3.00)	.600(15.2)	.512(13.0)

Note: KUS402B1/8 has #4.40 setscrew

Products for Industrial & Commercial Applications

Dimensions are shown for reference purposes only.

Dimensions are in inches and millimeters unless otherwise specified. Values in brackets are metric equivalents.

Specifications subject to change.

Technical Support Center
1-800-522-6752
www.tycoelectronics.com

Knobs, Molded Phenolic

PH SERIES



PH15181/4

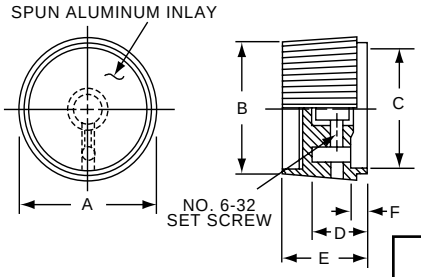

Straight Knurl Less Indicator Line

Model	A	B	C	D	E	F
PH15181/4	.996(25.3)	.972(24.7)	.799(20.3)	.472(12.0)	.669(17.0)	.157(3.99)
PH14171/4	1.19(30.2)	1.16(29.5)	.988(25.1)	.445(11.6)	.669(17.0)	.079(2.01)
PH13161/4	1.40(35.6)	1.34(34.0)	1.20(30.5)	.512(13.0)	.906(23.0)	.142(3.61)

PK SERIES



PK50B1/8



PK701/4

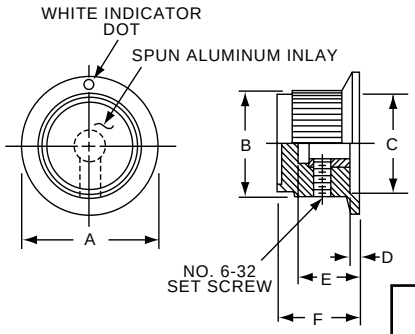

Straight Knurl with Dot Indicator on Skirt

Model	A	B	C	D	E	F
PK50B1/8	.748(19.0)	.570(14.5)	.472(12.0)	.055(1.40)	.460(11.7)	.550(14.0)
PK50B1/4	.748(19.0)	.570(14.5)	.472(12.0)	.055(1.40)	.460(11.7)	.550(14.0)
PK70B1/4	.984(25.0)	.728(18.5)	.642(16.3)	.079(2.01)	.500(12.7)	.590(15.0)
PK90B1/4	1.25(31.8)	.985(25.0)	.819(20.8)	.098(2.49)	.470(11.9)	.595(15.1)

PKT SERIES



PKT60B1/8

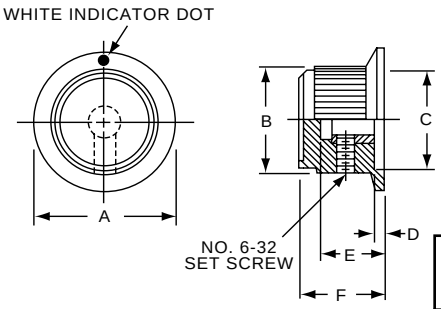

Black Spin Cap with "Diamond Cut"

Model	A	B	C	D	E	F
PKT60B1/8	.750(19.1)	.600(15.2)	.560(14.2)	.060(1.52)	.400(10.2)	.530(13.5)
PKT60B1/4	.750(19.1)	.600(15.2)	.560(14.2)	.060(1.52)	.400(10.2)	.530(13.5)
PKT70B1/4	1.00(25.4)	.740(18.8)	.630(16.0)	.080(2.03)	.500(12.7)	.630(16.0)
PKT100B1/4	1.25(31.8)	1.00(25.4)	.860(21.8)	.100(2.54)	.500(12.7)	.630(16.0)

PK SERIES



PK1100B1/4

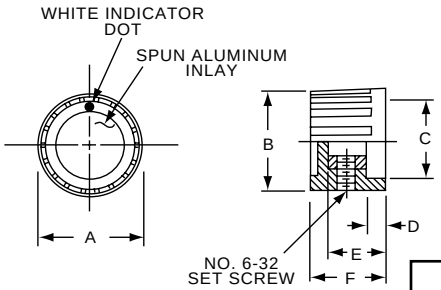

Serrated with Dot Indicator on Top

Model	A	B	C	D	E	F
PK1100B1/8	.700(17.8)	.643(16.3)	.575(14.6)	.138(3.51)	.440(11.2)	.530(13.5)
PK1100B1/4	.700(17.8)	.643(16.3)	.575(14.6)	.138(3.51)	.440(11.2)	.530(13.5)

For complete product information, order Catalog 1308390

Products for Industrial & Commercial Applications

Dimensions are shown for reference purposes only.

Dimensions are in inches and millimeters unless otherwise specified. Values in brackets are metric equivalents.

Specifications subject to change.

Technical Support Center
1-800-522-6752
www.tycoelectronics.com

Knobs, Molded Phenolic

PK SERIES



PKP194B1/4

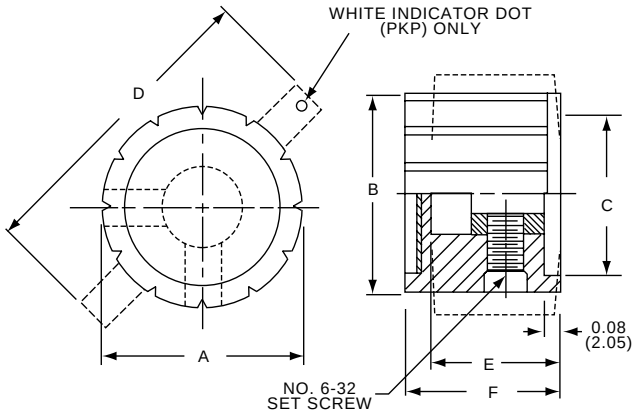

Serrated with Bar Point and Dot Indicator						
Model	**A**	**B**	**C**	**D**	**E**	**F**
*PK1108B1/4	1.00(25.4)	.980(24.9)	.840(21.3)		.620(15.7)	.800(20.3)
PKP194B1/4	1.00(25.9)	1.02(25.9)	.800(20.3)	1.60(40.6)	.590(15.0)	.840(21.3)

*Note: Supplied with one set screw.

PKA SERIES



PKA50B1/4



PKA90B1/4

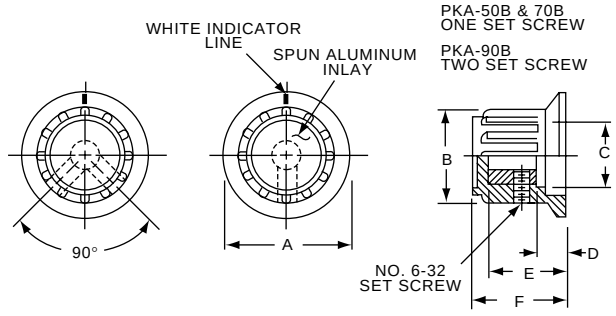

Ribbed with Line Indicator on Skirt						
Model	**A**	**B**	**C**	**D**	**E**	**F**
PKA50B1/8	.795(20.2)	.580(14.7)	.540(13.7)	.080(2.03)	.450(11.4)	.590(15.0)
PKA50B1/4	.795(20.2)	.580(14.7)	.540(13.7)	.080(2.03)	.450(11.4)	.590(15.0)
PKA55B1/8	.780(19.8)	.580(14.7)	.475(12.1)	.135(3.43)	.585(14.9)	.675(17.2)
PKA70B1/4	.980(24.9)	.740(18.8)	.680(17.3)	.118(3.00)	.650(16.5)	.750(19.1)
PKA90B1/4	1.38(34.9)	.970(24.6)	.670(17.0)	.195(4.95)	.750(19.1)	.840(21.3)

PKAP SERIES



PKAP50B1/8



PKAP90B1/4

For complete product information, order Catalog 1308390

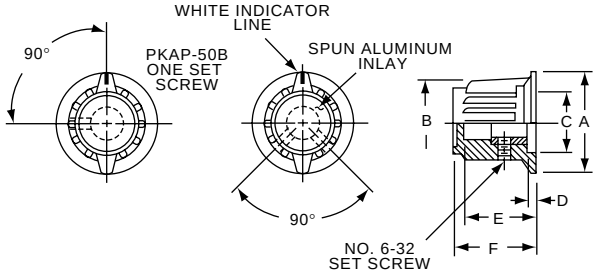

Ribbed with Skirt and Pointer with Indicator Line						
Model	**A**	**B**	**C**	**D**	**E**	**F**
PKAP50B1/8	.787(20.0)	.693(17.6)	.508(12.9)	.082(2.08)	.579(14.7)	.689(17.5)
PKAP50B1/4	.787(20.0)	.693(17.6)	.508(12.9)	.082(2.08)	.579(14.7)	.689(17.5)
PKAP70B1/4	.976(24.8)	.874(22.1)	.668(17.0)	.150(3.81)	.634(16.1)	.748(19.0)
PKAP90B1/4	1.36(34.6)	1.29(32.8)	.673(17.1)	.197(5.00)	.740(18.8)	.846(21.5)

Products for Industrial & Commercial Applications

Dimensions are shown for reference purposes only.

Dimensions are in inches and millimeters unless otherwise specified. Values in brackets are metric equivalents.

Specifications subject to change.

Technical Support Center
1-800-522-6752
www.tycoelectronics.com

Knobs, Molded Phenolic

PKB SERIES



PKB90B1/4

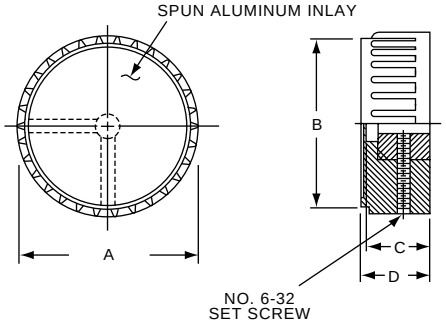

Fluted with Indicator Line On Skirt						
Model	**A**	**B**	**C**	**D**	**E**	**F**
PKB70B1/4	1.12(28.3)	.750(19.1)	.670(17.0)	.118(3.00)	.505(12.8)	.600(15.2)
PKB90B1/4	1.50(38.1)	1.02(25.8)	.800(20.3)	.145(3.68)	.705(17.9)	.820(20.8)

PKD SERIES



PKD60B1/4



PKD100B1/4

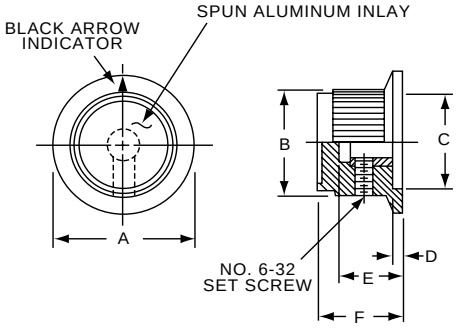

Straight Knurl Aluminum Skirt w/Arrow Indicator						
Model	**A**	**B**	**C**	**D**	**E**	**F**
PKD60B1/8	.800(20.3)	.600(15.2)	.480(12.2)	.050(1.27)	.370(9.40)	.520(13.2)
PKD60B1/4	.800(20.3)	.600(15.2)	.480(12.2)	.050(1.27)	.370(9.40)	.520(13.2)
PKD70B1/4	1.02(25.9)	.750(19.1)	.700(17.8)	.080(2.03)	.490(12.5)	.610(15.5)
PKD100B1/4	1.29(32.8)	1.00(25.4)	.865(22.0)	.050(1.27)	.500(12.7)	.590(15.0)

PKD SERIES



PKD60B101/8



PKD100B101/4

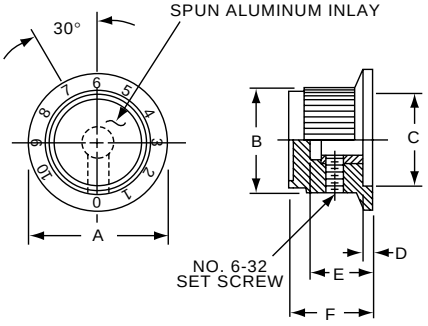

Straight Knurl Skirt w/0-10 Numerals						
Model	**A**	**B**	**C**	**D**	**E**	**F**
PKD60B101/8	.800(2.03)	.600(15.2)	.480(12.2)	.050(1.27)	.370(9.40)	.520(13.2)
PKD60B101/4	.800(2.03)	.600(15.2)	.480(12.2)	.050(1.27)	.370(9.40)	.520(13.2)
PKD70B101/4	1.02(25.9)	.750(19.1)	.700(17.8)	.080(2.03)	.490(12.5)	.610(15.5)
PKD100B101/4	1.29(32.8)	1.00(25.4)	.865(22.0)	.050(1.27)	.500(12.7)	.590(15.0)

For complete product information, order Catalog 1308390

Products for Industrial & Commercial Applications

Dimensions are shown for reference purposes only.

Dimensions are in inches and millimeters unless otherwise specified. Values in brackets are metric equivalents.

Specifications subject to change.

Technical Support Center
1-800-522-6752
www.tycoelectronics.com

Knobs, Molded Phenolic

PKDT SERIES



PKDT60B1/4



PKDT100B1/4

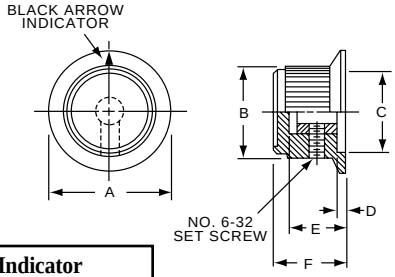

Black Spin Cap with "Diamond Cut" and Arrow Indicator

Model	A	B	C	D	E	F
PKDT60B1/8	.778(19.8)	.605(15.4)	.490(12.5)	.060(1.53)	.392(9.96)	.562(14.3)
PKDT60B1/4	.778(19.8)	.605(15.4)	.490(12.5)	.060(1.53)	.392(9.96)	.562(14.3)
PKDT70B1/4	1.03(26.0)	.738(18.8)	.720(18.3)	.098(2.49)	.500(12.7)	.635(16.1)
PKDT100B1/4	1.29(32.8)	1.02(25.9)	.860(21.8)	.042(1.07)	.500(12.7)	.638(16.2)

PKDT SERIES



PKDT100B101/4

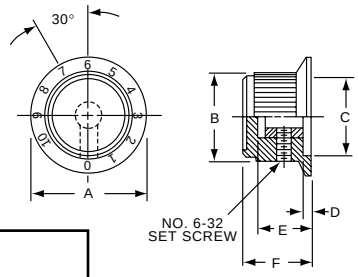

Black Spin Cap with "Diamond Cut" & 0-10 Numerals

Model	A	B	C	D	E	F
PKDT60B101/8	.778(19.8)	.605(15.4)	.560(12.5)	.060(1.53)	.392(9.96)	.562(14.3)
PKDT60B101/4	.778(19.8)	.605(15.4)	.560(12.5)	.060(1.53)	.392(9.96)	.562(14.3)
PKDT70B101/4	1.03(26.0)	.738(18.8)	.720(18.3)	.098(2.49)	.500(12.7)	.635(16.1)
PKDT100B101/4	1.29(32.8)	1.02(25.9)	.860(21.8)	.042(1.07)	.500(12.7)	.638(16.2)

PKE SERIES



PKE60B1/8



PKE90B1/4

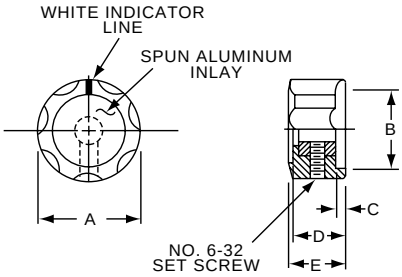

Fluted with Indicator Line

Model	A	B	C	D	E
PKE60B1/8	.626(15.9)	.472(12.0)	.091(2.31)	.394(10.0)	.472(12.0)
PKE60B1/4	.626(15.9)	.472(12.0)	.091(2.31)	.394(10.0)	.472(12.0)
PKE90B1/4	.890(22.6)	.724(18.4)	.098(2.49)	.480(12.2)	.512(13.0)

PKES SERIES



PKES60B1/4



PKES70B1/4

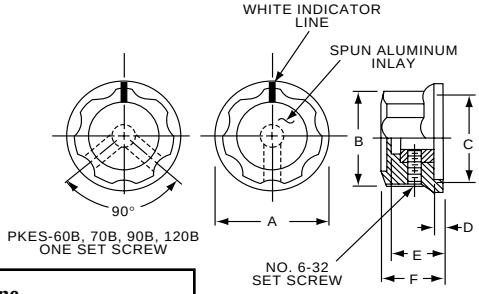

Fluted with Skirt and Indicator Line

Model	A	B	C	D	E	F
PKES60B1/8	.748(19.0)	618(15.7)	.460(11.7)	.090(2.29)	.370(9.40)	.470(11.9)
PKES60B1/4	.748(19.0)	.618(15.7)	.460(11.7)	.090(2.29)	.370(9.40)	.470(11.9)
PKES70B1/4	.855(21.7)	.744(18.9)	.705(17.9)	.080(2.03)	.421(10.7)	.526(13.4)
PKES90B1/4	1.01(25.7)	.889(22.6)	.846(21.5)	.079(2.01)	.421(10.7)	.570(14.5)
PKES120B1/4	1.30(32.9)	1.16(29.5)	1.02(25.9)	.118(3.00)	.500(12.7)	.628(16.0)
PKES140B1/4	1.50(38.1)	1.37(34.9)	1.22(30.9)	.118(3.00)	.540(13.7)	.693(17.6)
PKES150B1/4	1.77(44.9)	1.55(39.4)	1.41(35.9)	.118(3.00)	.733(18.6)	.831(21.1)

Products for Industrial & Commercial Applications

Dimensions are shown for reference purposes only.

Dimensions are in inches and millimeters unless otherwise specified. Values in brackets are metric equivalents.

Specifications subject to change.

Technical Support Center
1-800-522-6752
www.tycoelectronics.com

Knobs, Molded Phenolic

PKF SERIES



PKF50B1/8



PKF70B1/4

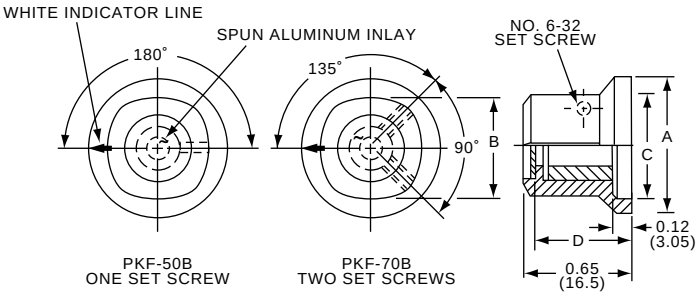

Plain Quadrate with Indicator Line & Arrow				
Model	**A**	**B**	**C**	**D**
PKF50B1/8	.670(17.0)	.450(11.4)	.530(13.5)	.520(13.2)
PKF50B1/4	.670(17.0)	.450(11.4)	.530(13.5)	.520(13.2)
PKF70B1/4	.830(21.0)	.610(15.5)	.580(14.7)	.580(14.7)

PKG SERIES



PKG40B1/8

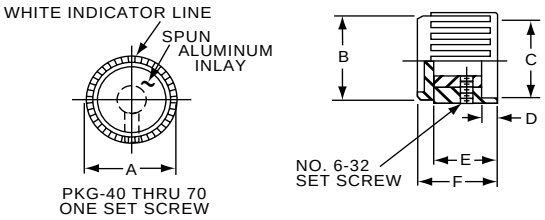

Ribbed with Indicator Line						
Model	**A**	**B**	**C**	**D**	**E**	**F**
*PKG40B1/8	.437(11.1)	.410(10.4)	.304(7.72)	.079(2.00)	.385(9.78)	.472(12.0)
PKG50B1/8	.551(14.0)	.500(12.7)	.442(10.7)	.056(1.42)	.395(10.03)	.512(13.0)
PKG50B1/4	.551(14.0)	.500(12.7)	.442(10.7)	.056(1.42)	.395(10.03)	.512(13.0)
*Note: Knob uses #4-40 set screw						

Knobs, Molded Phenolic

PKG SERIES



PKG70B1/8

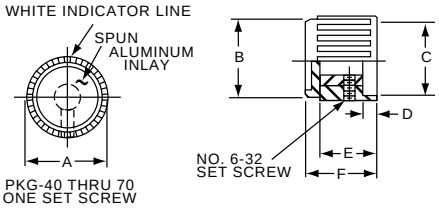

Ribbed with Indicator Line

Model	A	B	C	D	E	F
PKG60B1/8	.660(16.8)	.615(15.6)	.551(14.0)	.080(2.03)	.430(10.9)	.551(14.0)
PKG60B1/4	.660(16.8)	.615(15.6)	.551(14.0)	.080(2.03)	.430(10.9)	.551(14.0)
PKG70B1/8	.740(18.8)	.698(17.7)	.591(15.0)	.080(2.03)	.453(11.5)	.559(14.2)
PKG70B1/4	.740(18.8)	.698(17.7)	.591(15.0)	.080(2.03)	.453(11.5)	.559(14.2)

PKG SERIES



PKG90B1/4

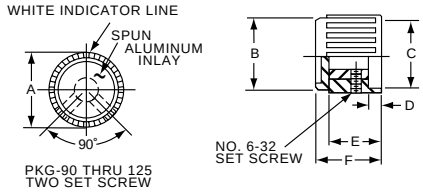

Ribbed with Indicator Line

Model	A	B	C	D	E	F
PKG90B1/8	.862(21.9)	.811(20.6)	.710(18.0)	.080(2.03)	.450(11.4)	.550(14.0)
PKG90B1/4	.862(21.9)	.811(20.6)	.710(18.0)	.080(2.03)	.450(11.4)	.550(14.0)
PKG100B1/8	1.06(26.9)	1.01(25.5)	.920(23.4)	.080(2.03)	.430(10.9)	.555(14.1)
PKG1255B1/4	1.25(31.7)	1.20(30.4)	.690(17.5)	.080(2.03)	.430(10.9)	.565(14.4)

PKGP SERIES



PKGP70B1/4

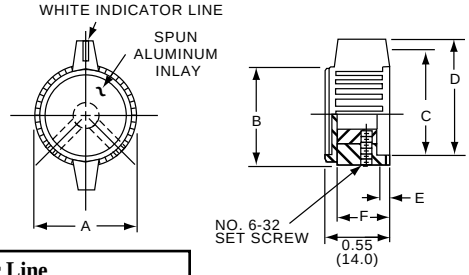

Ribbed with Bar Pointers and Indicator Line

Model	A	B	C	D	E	F
PKGP70B1/4	.740(18.8)	.700(17.8)	.590(15.0)	.990(25.2)	.080(2.03)	.460(11.7)
PKGP90B1/4	.860(21.8)	.810(20.6)	.700(17.8)	1.28(32.5)	.080(2.03)	.460(11.7)
PKGP100B1/4	1.05(26.2)	1.00(25.4)	.900(22.9)	1.62(41.2)	.080(2.03)	.480(12.2)

PKJ SERIES



PKJ50B1/8



PKJ70B1/4

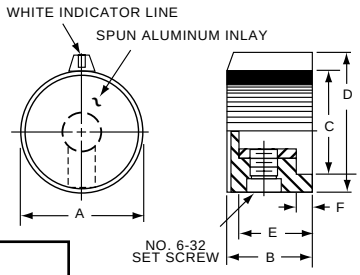

Straight Knurl with Aluminum Spin Plate

Model	A	B	C	D	E	F
PKJ50B1/8	.520(13.2)	.518(13.2)	.350(8.89)	.595(15.1)	.435(11.1)	.125(3.18)
*PKJ50B1/4	.520(13.2)	.518(13.2)	.350(8.89)	.595(15.1)	.435(11.1)	.125(3.18)
PKJ60B1/4	.630(16.0)	.530(13.5)	.468(11.9)	.758(19.3)	.440(11.2)	.110(2.79)
PKJ70B1/4	.760(19.3)	.555(14.1)	.545(13.8)	.915(23.2)	.450(11.4)	.118(3.00)

*Note: Knob uses #4-40 set screw

For complete product information, order Catalog 1308390

Products for Industrial & Commercial Applications

Dimensions are shown for reference purposes only.

Dimensions are in inches and millimeters unless otherwise specified. Values in brackets are metric equivalents.

Specifications subject to change.

Technical Support Center
1-800-522-6752
www.tycoelectronics.com

Knobs, Molded Phenolic

PKJT SERIES



PKJT50B1/4



PKJT70B1/4

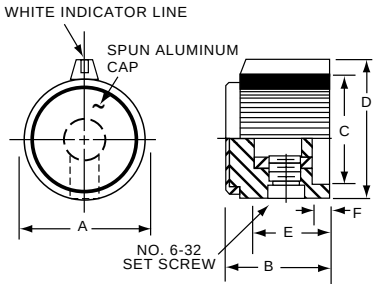

Straight Knurl with Aluminum Spin Plate						
Model	**A**	**B**	**C**	**D**	**E**	**F**
PKJT50B1/8	.515(13.1)	.585(14.9)	.350(8.89)	.595(15.1)	.414(10.5)	.130(3.30)
*PKJT50B1/4	.515(13.1)	.585(14.9)	.350(8.89)	.595(15.1)	.414(10.5)	.130(3.30)
PKJT60B1/4	.640(16.3)	.605(15.4)	.470(11.9)	.760(19.3)	.445(11.3)	.120(3.05)
PKJT70B1/4	.760(19.3)	.625(15.9)	.550(14.0)	.915(23.2)	.445(11.3)	.120(3.05)

PKNT SERIES



PKNT60B1/4

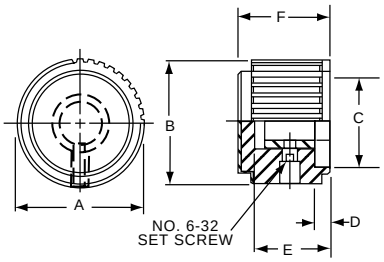

Black Spin Cap with "Diamond Cut" Less Indicator						
Model	**A**	**B**	**C**	**D**	**E**	**F**
PKNT60B1/8	.591(15.0)	.575(14.6)	.394(10.0)	.079(2.01)	.374(9.50)	.472(12.0)
PKNT60B1/4	.591(15.0)	.575(14.6)	.394(10.0)	.079(2.01)	.374(9.50)	.472(12.0)
PKNT70B1/4	.795(20.2)	.748(19.0)	.748(19.0)	.098(2.49)	.484(12.3)	.591(15.0)
PKNT90B1/4	.980(24.9)	.957(24.3)	.748(19.0)	.098(2.49)	.590(15.0)	.700(17.8)

PKN SERIES



PKN60B1/8

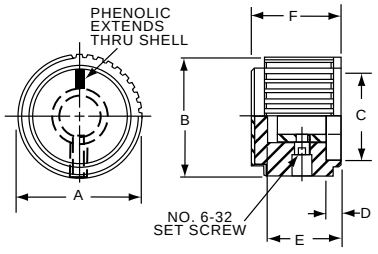

Line Indicator on Natural Aluminum Spin Cap						
Model	**A**	**B**	**C**	**D**	**E**	**F**
PKN60B1/8	.591(15.0)	.579(14.7)	.394(10.0)	.079(2.01)	.394(10.0)	.453(11.5)
PKN60B1/4	.591(15.0)	.579(14.7))	.394(10.0)	.079(2.01)	.394(10.0)	.453(11.5)
PKN70B1/4	.787(20.0)	.764(19.4)	.571(14.5)	.098(2.49)	.492(12.5)	.591(15.0)
PKN90B1/4	.984(25.0)	.957(24.3)	.748(19.0)	.098(2.49)	.591(15.0)	.689(17.5)

PKR SERIES



PKR175B1/4

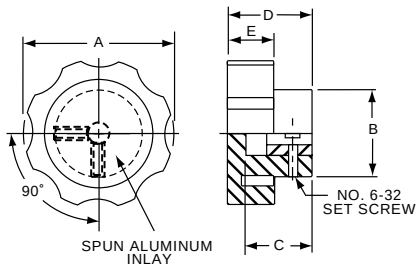

High Torque Fluted Knobs					
Model	**A**	**B**	**C**	**D**	**E**
PKR125B1/4	1.18(29.9)	.785(19.9)	.468(11.9)	.615(15.6)	.300(7.62)
PKR175B1/4	1.77(44.9)	1.02(25.9)	.788(20.0)	1.00(25.4)	.364(9.25)

For complete product information, order Catalog 1308390

Products for Industrial & Commercial Applications

Dimensions are shown for reference purposes only.

Dimensions are in inches and millimeters unless otherwise specified. Values in brackets are metric equivalents.

Specifications subject to change.

Technical Support Center
1-800-522-6752
www.tycoelectronics.com

Knobs, Molded Phenolic

PKS SERIES



PKS1104B1/4

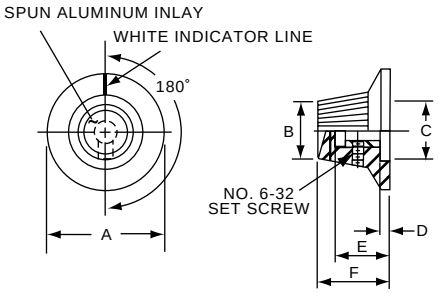

Straight Knurl with Indicator Line on Skirt						
Model	**A**	**B**	**C**	**D**	**E**	**F**
PKS1104B1/4	1.12(28.5)	.567(14.4)	.620(15.8)	.090(2.29)	.510(12.95)	.670(17.0)

PKS SERIES



PKS1106B1/4

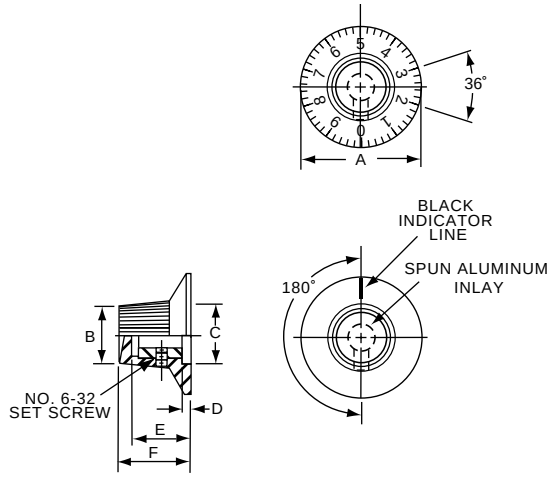

Straight Knurl Aluminum Skirt Has Line or 0-9 Numbers							
Model	**A**	**B**	**C**	**D**	**E**	**F**	**Marking**
PKS1106B1/4	1.17(29.6)	.571(14.5)	.618(15.7)	.098(2.49)	.516(13.1)	.670(17.0)	Line
PKS1105B101/4	1.17(29.6)	.571(14.5)	.618(15.7)	.098(2.49)	.516(13.1)	.670(17.0)	Numbers

PKS SERIES



PKS1132B51/4



PKS1132B91/4

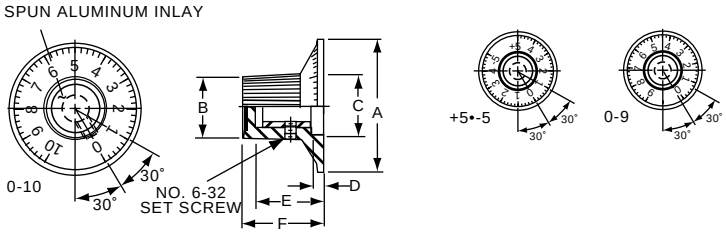

Choice of Indicator Line or 0-9, 0-10, -5+5 Numerals							
Model	**A**	**B**	**C**	**D**	**E**	**F**	**Marking**
PKS1132B51/4	1.18(30.0)	.551(14.0)	.551(14.0)	.118(30.0)	.642(16.3)	.748(19.0)	+5-0-5
PKS1132B91/4	1.18(30.0)	.551(14.0)	.551(14.0)	.118(30.0)	.642(16.3)	.748(19.0)	0-9
PKS1132B101/4	1.18(30.0)	.551(14.0)	.551(14.0)	.118(30.0)	.642(16.3)	.748(19.0)	0-10
*PKS1132B1/4	1.18(30.0)	.551(14.0)	.551(14.0)	.118(30.0)	.642(16.3)	.748(19.0)	Blank

*1 Set screw 180° from indicator line.

For complete product information, order Catalog 1308390

Products for Industrial & Commercial Applications

Dimensions are shown for reference purposes only.

Dimensions are in inches and millimeters unless otherwise specified. Values in brackets are metric equivalents.

Specifications subject to change.

Technical Support Center
1-800-522-6752
www.tycoelectronics.com

Knobs, Molded Phenolic

PKS SERIES



PKS90B1/4

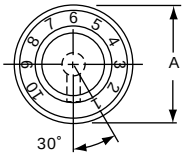

PKS90B101/4

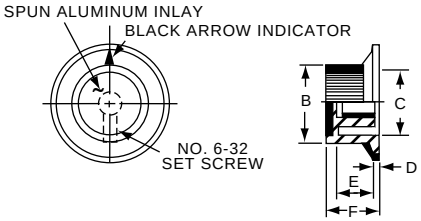

Straight Knurl with Aluminum Skirt Choice of Arrow or 1-10 Numbers							
Model	**A**	**B**	**C**	**D**	**E**	**F**	**Marking**
PKS90B1/4	1.42(36.1)	.917(23.3)	.780(19.8)	.065(1.65)	.490(12.5)	.596(15.1)	Arrow
PKS90B101/4	1.42(36.1)	.917(23.3)	.780(19.8)	.065(1.65)	.490(12.5)	.596(15.1)	Numbers

PKX SERIES



PKX50B1/8

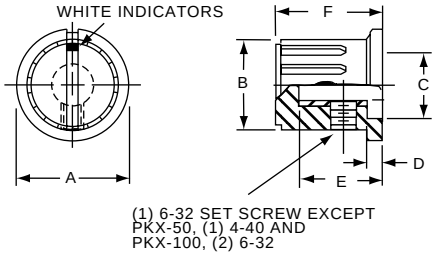

Ribbed Body, Matte Finish with White Square Indicator on Top						
Model	**A**	**B**	**C**	**D**	**E**	**F**
PKX50B1/8	.590(15.0)	.472(12.0)	.374(9.49)	.059(1.50)	.450(11.4)	.551(14.0)
PKX50B1/4	.590(15.0)	.472(12.0)	.374(9.49)	.059(1.50)	.450(11.4)	.551(14.0)
PKX60B1/8	.787(20.0)	.625(15.9)	.472(12.0)	.047(1.19)	.510(13.0)	.598(15.2)
PKX60B1/4	.787(20.0)	.625(15.9)	.472(12.0)	.047(1.19)	.510(13.0)	.598(15.2)
PKX80B1/4	.950(24.1)	.827(21.0)	.630(16.0)	.047(1.19)	.550(14.0)	.630(16.0)
PKX100B1/4	1.17(29.7)	.970(24.6)	.860(21.8)	.120(3.05)	.540(13.7)	.670(17.0)

PKX SERIES



PKX110B1/4

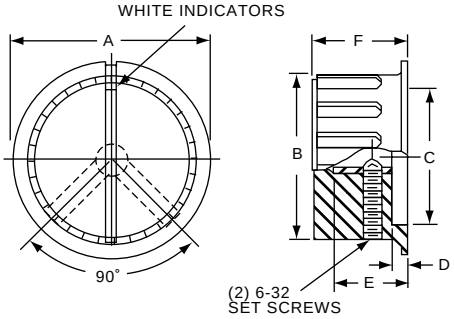

Ribbed Body, Matte Finish with White Square Indicator on Top						
Model	**A**	**B**	**C**	**D**	**E**	**F**
PKX110B1/4	1.37(34.8)	1.14(29.0)	.930(23.6)	.120(3.05)	.540(13.7)	.710(18.4)
PKX130B1/4	1.57(40.0)	1.32(33.5)	1.09(27.6)	.120(3.05)	.610(15.5)	.750(19.0)

For complete product information,
order Catalog 1308390

Products for Industrial & Commercial Applications

Dimensions are shown for reference purposes only.

Dimensions are in inches and millimeters unless otherwise specified. Values in brackets are metric equivalents.

Specifications subject to change.

Technical Support Center
1-800-522-6752
www.tycoelectronics.com

140 SERIES

STANDARD FEATURES
- Double pole, single throw
- Ratings:
  10A 125VAC
  8(8) 250VAC
- UL/CSA approved
- Most European approvals

OPTIONS
- Lock on
- Lock off
- Plug-in and/or screw terminals
- Various trigger styles and colors
- Various lock button styles and colors



WIRING DIAGRAM

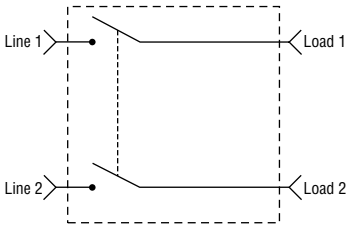

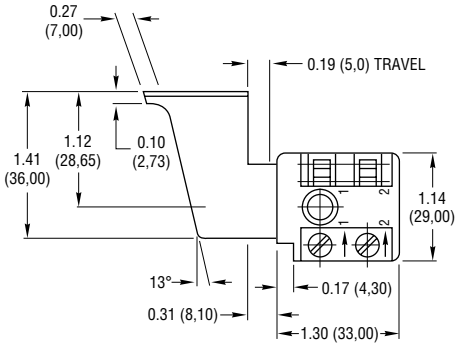

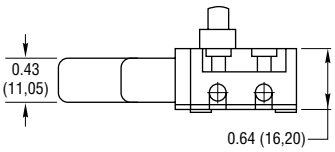

8649 SERIES VARIABLE SPEED

STANDARD FEATURES
- Single pole
- Rating:
  10A 12VDC
- UL approved
- Plug-in termination

OPTIONS
- Three position reversing switch with center off
- Various trigger styles and colors
- Dynamic brake circuit
- Battery terminals
- Special speed control circuits for: 7.2, 9.6, 12, 24 and 36VDC
- Wide range of power FETS
- Various reversing lever styles and colors
- Higher ratings



WIRING DIAGRAM

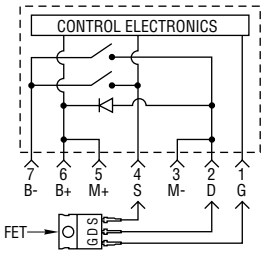

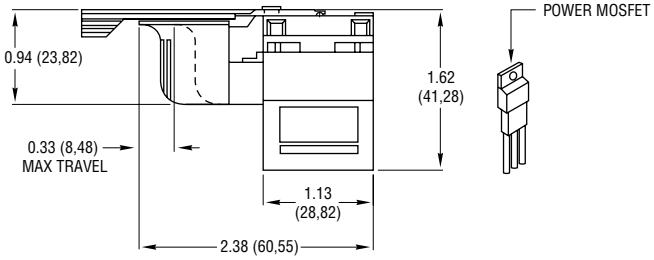

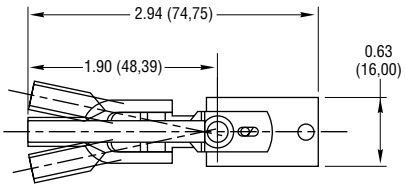

PT SERIES

STANDARD FEATURES
- Double pole, single throw
- UL/CSA approved:
  22A 125VAC/DC
  10A 250VAC/DC
- VDE 10 (10) 250V
- Screw termination

OPTIONS
- Alternate circuits
  i.e.: SPDT and alternate action
- Lock on
- Padlock hole
- Various trigger styles and colors



WIRING DIAGRAM

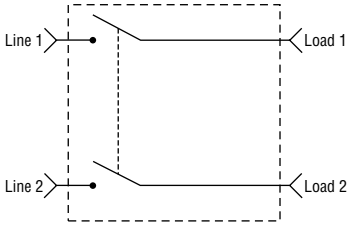

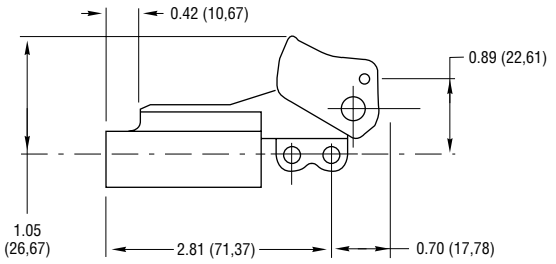

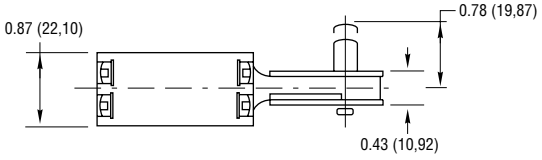

For complete product information, order Catalog 1308650

Products for Industrial & Commercial Applications
Dimensions are shown for reference purposes only.
Dimensions are in inches and millimeters unless otherwise specified. Values in brackets are metric equivalents.
Specifications subject to change.
Technical Support Center
1-800-522-6752
www.tycoelectronics.com

CUSTOM POWER TOOL SWITCHES

Power Tool Switches include a wide assortment of on/off utility trigger switches, dust resistant AC variable speed switches, in-line and “L” style cordless tool switches, custom battery tool switches, standard and custom industrial dynamic brake switches. These power tool switches are currently used in consumer electric hand power tools and industrial tools. Manufacturing capabilities include thick film on ceramic substrates; automated surface mount placement systems; resistive, reflow, belt reflow and infrared soldering; laser trim/test (active and passive); chip mounting, wire bonding and full encapsulation capability. In addition to our standard product offering, Tyco Electronics can adapt products and develop products which accommodate your specific needs. Working with your engineering staff at the concept stage, we can design solutions for specific customer needs.

Tyco Electronics can manufacture Power Tool Switches to your specific requirements. Contact us for more information at 800-522-6752.

CUSTOM VARIABLE SPEED AND ON/OFF TRIGGER SWITCHES


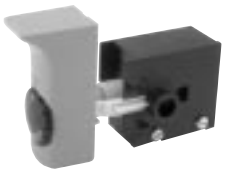


CUSTOM BATTERY TOOL SWITCHES





CUSTOM INDUSTRIAL TOOL SWITCHES



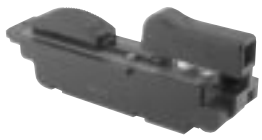

For complete product information, order Catalog 1308390

Products for Industrial & Commercial Applications

Dimensions are shown for reference purposes only.

Dimensions are in inches and millimeters unless otherwise specified. Values in brackets are metric equivalents.

Specifications subject to change.

Technical Support Center
1-800-522-6752
www.tycoelectronics.com

Table of Contents

Terminal Stud Hole Size Chart 7002

Uninsulated Terminals and Splices
- SOLISTRAND Uninsulated Terminals and Splices 7003-7016
- DIAMOND GRIP Uninsulated Terminals 7017-7020
- STRATO-THERM Terminals and Splices for High Temperature Applications 7021-7031
- AMPOWER Terminals and Splices.....7032-7036

Insulated Terminals and Splices
- PIDG (Pre-Insulated Diamond Grip) Terminals and Splices 7037-7049
- Radiation Resistant/150° C Terminals and Splices.....7050, 7051
- PLASTI-GRIP Insulated Terminals and Splices 7052-7061
- AMPLI-BOND Insulated Terminals 7062-7064
- TERMINYL Insulated Terminals 7065, 7066
- Insulated Terminal and Splice Tooling 7067, 7068
- CERTI-SEAL Splices 7069
- Closed End Splices 7070-7074

Quick Connect/Disconnect Terminals and Splices
- FASTON Insulated and Uninsulated Terminals 7075
- FASTON Uninsulated Receptacles.....7076-7091
- FASTON Uninsulated Tabs 7092-7103
- FASTON Receptacle Housings 7104-7106
- FASTIN-FASTON Multiple Circuit Connectors 7107-7109
- Positive Lock Receptacles 7110-7113
- Positive Lock RAST 5 Connector System 7114
- Ultra-Fast — Fully Insulated FASTON Receptacles and Tabs 7115-7117
- Ultra-Fast Plus — Fully Insulated FASTON Receptacles and Tabs 7118-7119
- Ultra-Pod Fully Insulated FASTON Receptacles and Tabs 7120-7122
- PIDG FASTON Receptacles 7123-7125

Machine Applied Terminals and Splices, Open Barrel
- Ring Tongue Terminals.....7126-7130
- Spade Tongue Terminals 7130, 7131
- Splices 7131
- Receptacles 7132
- SHUR-PLUG Terminals and Receptacles 7132, 7133
- Tab Receptacles 7133

Magnet Wire Terminals and Splices
- AMPLIVAR Magnet Wire Splices 7135-7139
- Standard MAG-MATE Magnet Wire Terminals.....7140-7149

Aluminum/Copper Wire Terminals and Splices
- TERMI-FOIL Terminals and Splices (for Aluminum & Copper Foil or Strip) 7150-7153
- COPALUM Terminals and Splices (for Solid & Stranded Aluminum or Copper Wire) 7154-7157

Appliance Related Connectors
- Power Blocks and Power Rings 7158-7160
- Surface Burner Connector System 7161-7163
- RAST 5/2.5 Products.....7164-7171
- AMP Standard Timer Connector 7164-7170
- AMP Multifitting Connectors 7170
- AMP Multifitting Edge One- Piece Connector System 7170
- AMP MONO-SHAPE Connectors 7171
- AMP MT-Edge Card Edge Connectors.....7171
- AMP DUOPLUG 2.5 Connector System 7171

Products for Industrial & Commercial Applications
Dimensions are shown for reference purposes only.
Dimensions are in inches and millimeters unless otherwise specified. Values in brackets are metric equivalents.
Specifications subject to change.
Technical Support Center 1-800-522-6752 www.tycoelectronics.com

Use to Select Proper Size Terminal

The chart shows sizes and dimensions of various studs and the corresponding terminal stud hole sizes used with AMP devices.

For example, with stud #5 (.125 Diameter), use AMP device listed for #5 stud (.129 Hole Diameter).

Terminal stud hole sizes may easily be checked by fitting sample terminal to black circle.

Stud Size		Stud Dia.	Minimum Terminal Hole Diameter
U.S. Cust.	Metric		
#0		.060	.064
#1		.073	.077
#2	M2	.086	.090
#3		.099	.103
#4		.112	.116
#5	M3	.125	.129
#6	M3.5	.138	.142
#8	M4	.164	.168
#10		.190	.194
#12		.216	.220
#14		.242	.245
1/4"	M6	.250	.260
5/16"	M8	.312	.323
3/8"		.375	.385
7/16"		.437	.448
1/2"	M12	.500	.510
5/8"	M16	.625	.651
3/4"		.750	.776
7/8"	M22	.875	.901
1"		1.000	1.026
1 1/8"		1.125	1.151
1 1/4"		1.250	1.276

For complete product information, order Catalog 82042

Products for Industrial & Commercial Applications

Dimensions are shown for reference purposes only.

Dimensions are in inches and millimeters unless otherwise specified. Values in brackets are metric equivalents.

Specifications subject to change.

Technical Support Center
1-800-522-6752
www.tycoelectronics.com

The SOLISTRAND Terminal

SOLISTRAND terminals and splices are specially designed to terminate solid and stranded wire, irregular shaped conductors, and combinations of these—still retaining the superior performance characteristics of single-purpose terminals and splices. Because AMP matches the terminal to the tool each termination is uniformly perfect, making quality control easy and performance consistent. Corrosion resistance, vibration resistance and tensile strength of these terminals and splices are well within the limits of commercial and military specifications. The SOLISTRAND line includes parallel and butt splices, and flag, ring, spade, hooked, and flanged tongue terminals in sizes from 26 AWG [0.1 mm^2] through 600 MCM [304 mm^2].

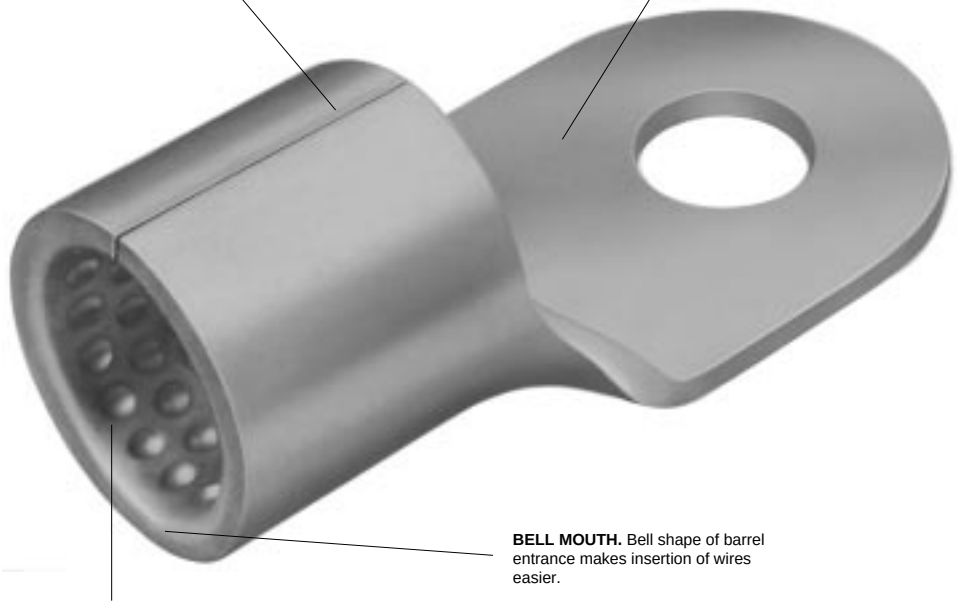

BASIC TERMINAL MATERIAL. The basic terminal is constructed of fine grade high conductivity copper per ASTM B-152 and tin-plated per MIL-T-10727. Basic material for Spring Spade Tongue Terminals is phosphor bronze per ASTM B-103 and tin-plated per MIL-T-10727. The AMP special plating process creates durable corrosion resistance to salt spray and most chemical fumes.

BRAZED SEAM. The barrel is completely closed and seam is brazed for uniform metal strength around the entire barrel area.

BELL MOUTH. Bell shape of barrel entrance makes insertion of wires easier.

DIMPLES OR SERRATIONS. Inner surface either dimpled or serrated for optimum tensile strength and maximum electrical contact area after crimping.

SOLISTRAND Terminals meet or exceed the requirements of MIL-T-7928, Type I, Class 1 and 2.

The Crimp

The "W" Crimp is one of several time-proven crimp types developed by AMP. It is not just a "kink" in a metal barrel; not something pinched over electrical wire ends. The "W" Crimp is actually two longitudinal crimps applied with precisely controlled pressure so that the conductor within the barrel flows together into the dimples or serrations of the terminal barrel creating one homogeneous mass of metal. The two indents also help to center conductors within the barrel for uniform crimping of the barrel around the wire. Furthermore, the "W" Crimp permits the use of a shorter terminal barrel, an excellent feature for confined area termination.

The "W" Crimp creates terminations of optimum electrical properties and is completely reliable, giving long service in punishing environments.

"W" Crimp

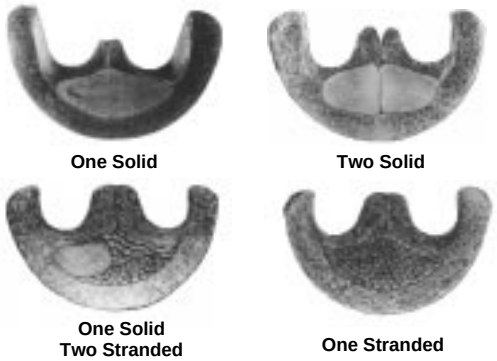

One Solid | **Two Solid**

One Solid, Two Stranded | **One Stranded**

Temperature Rating: 170°C Max.

AMP SOLISTRAND Terminals and Splices (Use SOLISTRAND Tooling)

AMP Wire Size	Listed File No. E13288	LR 7189 Certified
22–16 Solid or Stranded	22–16 Solid or Stranded	22–16 Solid or Stranded
16–14 Solid or Stranded	16–14 Solid or Stranded	16–14 Solid or Stranded
16–14 Heavy Duty Solid or Stranded	16–14 Heavy Duty Stranded	16–14 Heavy Duty Solid or Stranded
14–12 Solid or Stranded	14–12 Stranded	14–12 Solid or Stranded
12–10 Solid or Stranded	12–10 Stranded	12–10 Solid or Stranded
8 thru 600 MCM Solid or Stranded	8 thru 600 MCM Stranded	8 thru 600 MCM Solid or Stranded

Note: 22-16 terminals and splices are stamped 22-18 in accordance with MIL-T-7928. Commercial wire range is 22-16.

For complete product information, order Catalog 65505

Products for Industrial & Commercial Applications
Dimensions are shown for reference purposes only.
Dimensions are in inches and millimeters unless otherwise specified. Values in brackets are metric equivalents.
Specifications subject to change.
Technical Support Center
1-800-522-6752
www.tycoelectronics.com

Ring Tongue Terminals

Material and Finish:

Terminal Body — Copper per ASTM B-152

Plating — Tin per MIL-T-10727

A

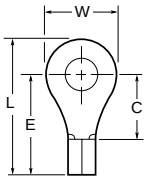

90° Bent

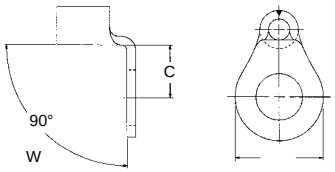

Wire Size Circular Mils [mm²]	Stud Size	Style	Dimensions L Max.	E Max.	C Min.	W	Material Thickness Max.	Wire Barrel I.D. Min.	Part Numbers
26–22 202–810 [0.1–0.41]	2 M2	A	**.419** 10.64	**.346** 8.79	**.211** 5.36	**.140** 3.56	**.020** 0.51	**.031** 0.79	50334*
22–16 509–3,260 [0.26–1.65]	2 M2	A	**.449** 11.40	**.337** 8.56	**.156** 3.96	**.218** 5.54	**.033** 0.84	**.061** 1.55	34103
	4	A	**.449** 11.40	**.337** 8.56	**.156** 3.96	**.218** 5.54	**.033** 0.84	**.061** 1.55	2-34104-6
		A	**.446** 11.33	**.353** 8.97	**.172** 4.37	**.182** 4.62	**.033** 0.84	**.061** 1.55	36467*
		A	**.621** 15.77	**.493** 12.52	**.312** 7.92	**.250** 6.35	**.033** 0.84	**.061** 1.55	323096 2-323096-2
	6 M3.5	A	**.449** 11.40	**.337** 8.56	**.156** 3.96	**.218** 5.54	**.033** 0.84	**.061** 1.55	34105*
		A	**.574** 14.58	**.436** 11.07	**.250** 6.35	**.281** 7.14	**.033** 0.84	**.061** 1.55	34107* 2-34107-2
		A	**.621** 15.77	**.462** 11.73	**.281** 7.14	**.312** 7.92	**.033** 0.84	**.061** 1.55	34110*
	8 M4	A	**.621** 15.77	**.462** 11.73	**.281** 7.14	**.312** 7.92	**.033** 0.84	**.061** 1.55	2-34111-3
		A	**.574** 14.58	**.436** 11.07	**.250** 6.35	**.281** 7.14	**.033** 0.84	**.061** 1.55	34108* 2-34108-2
	10	A	**.621** 15.77	**.462** 11.73	**.281** 7.14	**.312** 7.92	**.033** 0.84	**.061** 1.55	34112* 2-34112-2
		A	**.574** 14.58	**.436** 11.07	**.250** 6.35	**.281** 7.14	**.033** 0.84	**.061** 1.55	34109* 2-34109-2
		90° Bent	—	—	**.187** 4.75	**.312** 7.92	**.031** 0.79	**.141** 3.58	322768
	1/4 M6	A	**.856** 21.74	**.618** 15.70	**.437** 11.10	**.469** 11.91	**.033** 0.84	**.061** 1.55	34113* 2-34113-2
	5/16 M8	A	**.856** 21.74	**.618** 15.70	**.437** 11.10	**.469** 11.91	**.033** 0.84	**.061** 1.55	34114* 2-34114-2
	3/8	A	**.995** 25.27	**.727** 18.47	**.546** 13.87	**.531** 13.49	**.033** 0.84	**.061** 1.55	34115* 2-34115-2
	1/2 M12	A	**1.070** 27.18	**.711** 18.06	**.530** 13.46	**.713** 18.11	**.033** 0.84	**.061** 1.55	329966*
16–14 2,050–5,180 [1.04–2.62]	4	A	**.480** 12.19	**.352** 8.94	**.171** 4.34	**.250** 6.35	**.033** 0.84	**.085** 2.16	34119*
	6 M3.5	A	**.636** 16.15	**.462** 11.73	**.281** 7.14	**.343** 8.71	**.033** 0.84	**.085** 2.16	34121* 2-34121-1
		A	**.480** 12.19	**.352** 8.94	**.171** 4.34	**.250** 6.35	**.033** 0.84	**.085** 2.16	34120* 2-34120-1
		A	**.590** 14.99	**.431** 10.95	**.250** 6.35	**.312** 7.92	**.033** 0.84	**.085** 2.16	321684*
	8 M4	A	**.636** 16.15	**.462** 11.73	**.281** 7.14	**.343** 8.71	**.033** 0.84	**.085** 2.16	34122* 2-34122-1
	10	A	**.636** 16.15	**.462** 11.73	**.281** 7.14	**.343** 8.71	**.033** 0.84	**.085** 2.16	2-34123-1
		A	**.669** 16.99	**.510** 12.95	**.250** 6.35	**.312** 7.92	**.033** 0.84	**.085** 2.16	320093 2-320093-1
	1/4 M6	A	**.855** 21.72	**.618** 15.70	**.437** 11.10	**.469** 11.91	**.033** 0.84	**.085** 2.16	34124*
	5/16 M8	A	**.855** 21.72	**.618** 15.70	**.437** 11.10	**.469** 11.91	**.033** 0.84	**.085** 2.16	34125*
	3/8	A	**.995** 25.27	**.727** 18.47	**.546** 13.87	**.531** 13.49	**.033** 0.84	**.085** 2.16	34126*
	1/2 M12	A	**1.184** 30.07	**.806** 20.47	**.625** 15.88	**.750** 19.05	**.033** 0.84	**.085** 2.16	50981

Note: Part numbers are shown as loose piece over tape mounted product.
* Part numbers are available in small quantity packages.

For complete product information, order Catalog 65505

Products for Industrial & Commercial Applications
Dimensions are shown for reference purposes only.
Dimensions are in inches and millimeters unless otherwise specified. Values in brackets are metric equivalents.
Specifications subject to change.
Technical Support Center 1-800-522-6752 www.tycoelectronics.com

Ring Tongue Terminals

Material and Finish:

Terminal Body — Copper per ASTM B-152

Plating — Tin per MIL-T-10727

A

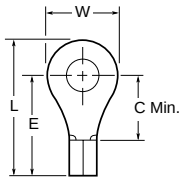

B

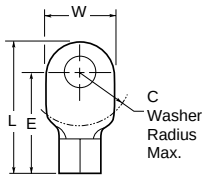

Wire Size Circular Mils [mm²]	Stud Size	Style	Dimensions L Max.	E Max.	C	W	Material Thickness Max.	Wire Barrel I.D. Min.	Part Numbers
14–12 3,260–8,230 [1.65–4.17]	6	B	**.654** 16.61	**.526** 13.36	**.330** 8.38	**.250** 6.35	**.038** 0.97	**.098** 2.49	35684
	10	B	**.739** 18.77	**.526** 13.36	**.250** 6.35	**.421** 10.69	**.042** 1.07	**.098** 2.49	34484
		B	**.685** 17.40	**.526** 13.36	**.250** 6.35	**.312** 7.92	**.042** 1.07	**.098** 2.49	321828 1-321828-0
	1/4 M6	B	**.739** 18.77	**.526** 13.36	**.250** 6.35	**.421** 10.69	**.042** 1.07	**.098** 2.49	34487
	3/8	B	**1.120** 28.45	**.774** 19.66	**.437** 11.10	**.687** 17.45	**.042** 1.07	**.098** 2.49	34486
12–10 5,180–13,100 [2.62–6.64]	4	A	**.630** 16.00	**.487** 12.37	**.219** 5.56	**.281** 7.14	**.042** 1.07	**.129** 3.28	322447
	6 M3.5	A	**.630** 16.00	**.487** 12.37	**.219** 5.56	**.281** 7.14	**.042** 1.07	**.129** 3.28	35476* 2-35476-1
		A	**.765** 19.43	**.575** 14.61	**.302** 7.67	**.375** 9.53	**.042** 1.07	**.129** 3.28	33456
	8 M4	A	**.708** 17.98	**.549** 13.94	**.281** 7.14	**.312** 7.92	**.042** 1.07	**.129** 3.28	322454*
		A	**.765** 19.43	**.575** 14.61	**.302** 7.67	**.375** 9.53	**.042** 1.07	**.129** 3.28	2-32994-1
	10	A	**.723** 18.36	**.549** 13.94	**.281** 7.14	**.343** 8.71	**.042** 1.07	**.129** 3.28	322455
		A	**.765** 19.43	**.575** 14.61	**.302** 7.67	**.375** 9.53	**.042** 1.07	**.129** 3.28	33457* 2-33457-2
		A	**.808** 20.52	**.618** 15.70	**.343** 8.71	**.375** 9.53	**.042** 1.07	**.129** 3.28	31805
		A	**.865** 21.97	**.612** 15.54	**.344** 8.74	**.500** 12.70	**.042** 1.07	**.129** 3.28	35771* 2-35771-1
	1/4 M6	A	**.865** 21.97	**.612** 15.54	**.344** 8.74	**.500** 12.70	**.042** 1.07	**.129** 3.28	35772* 2-35772-1
		A	**1.004** 25.50	**.736** 18.69	**.468** 11.89	**.531** 13.49	**.042** 1.07	**.129** 3.28	33458* 2-33458-3
	5/16 M8	A	**1.004** 25.50	**.736** 18.69	**.468** 11.89	**.531** 13.49	**.042** 1.07	**.129** 3.28	33459* 2-33459-6
	3/8	A	**1.098** 27.89	**.799** 20.29	**.531** 13.49	**.593** 15.06	**.042** 1.07	**.129** 3.28	33220* 1-33220-2[1]
		A	**1.271** 32.28	**.893** 22.68	**.625** 15.88	**.750** 19.05	**.042** 1.07	**.129** 3.28	322242
	1/2 M12	A	**1.271** 32.28	**.893** 22.68	**.625** 15.88	**.750** 19.05	**.042** 1.07	**.129** 3.28	351.35
		A	**1.896** 48.16	**1.268** 32.21	**1.000** 25.40	**1.250** 31.75	**.042** 1.07	**.129** 3.28	320763
	5/8 M16	A	**1.896** 48.16	**1.268** 32.21	**1.000** 25.40	**1.250** 31.75	**.042** 1.07	**.129** 3.28	320764
	3/4	A	**1.896** 48.16	**1.268** 32.21	**1.000** 25.40	**1.250** 31.75	**.042** 1.07	**.129** 3.28	320765

Note: Part numbers are shown as loose piece over tape mounted product.
*Part numbers are available in small quantity packages.
[1] Requires a 68250-1 Heavy Duty TAPETRONIC and 68242-2 die set for application.

Ring Tongue Terminals

Material and Finish:

Terminal Body — Copper per ASTM B-152

Plating — Tin per MIL-T-10727

A

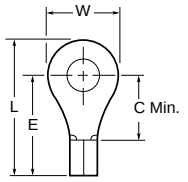

C

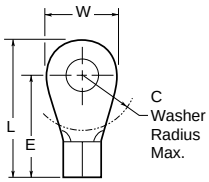

90° Bent

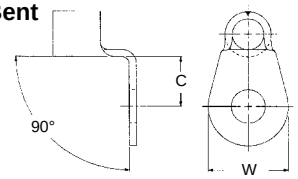

Wire Size Circular Mils [mm²]	Stud Size	Style	Dimensions L Max.	E Max.	C	W	Material Thickness Max.	Wire Barrel I.D. Min.	Part Numbers
8 13,100–20,800 [6.64–10.5]	8 M4	C	**.949** 24.10	**.743** 18.87	**.359** 9.12	**.406** 10.31	**.051** 1.30	**.172** 4.37	324061*
		C	**.933** 23.70	**.696** 17.68	**.359** 9.12	**.469** 11.91	**.051** 1.30	**.172** 4.37	32996*
	10	C	**.933** 23.70	**.696** 17.68	**.359** 9.12	**.469** 11.91	**.051** 1.30	**.172** 4.37	2-33460-3*[2]
		C	**.949** 24.10	**.743** 18.87	**.359** 9.12	**.406** 10.31	**0.51** 1.30	**.172** 4.37	31807 2-31807-2*[2]
	1/4 M6	C	**.933** 23.70	**.696** 17.68	**.359** 9.12	**.469** 11.91	**.051** 1.30	**.172** 4.37	33461* 2-33461-2*[1] 2-33461-3*[2]
		A	**1.168** 29.67	**.868** 22.05	**.531** 13.49	**.594** 15.09	**.051** 1.30	**.172** 4.37	35247*
	5/16 M8	A	**1.168** 29.67	**.868** 22.05	**.531** 13.49	**.594** 15.09	**.051** 1.30	**.172** 4.37	33462* 2-33462-1[2]
		A	**1.074** 27.28	**.790** 20.07	**.406** 10.31	**.562** 14.27	**.051** 1.30	**.172** 4.37	31808*
	1/2 M12	A	**1.965** 49.91	**1.337** 33.96	**1.000** 25.40	**1.250** 31.75	**.051** 1.30	**.172** 4.37	35664*
	5/8 M16	A	**1.965** 49.91	**1.337** 33.96	**1.000** 25.40	**1.250** 31.75	**.051** 1.30	**.172** 4.37	35665
	3/4	A	**1.965** 49.91	**1.337** 33.96	**1.000** 25.40	**1.250** 31.75	**.051** 1.30	**.172** 4.37	35666
6 20,800–33,100 [10.5–16.8]	10	C	**1.181** 30.00	**.931** 23.65	**.531** 13.49	**.406** 10.31	**.060** 1.52	**.232** 5.89	52197* 52197-1
		C	**1.181** 30.00	**.984** 24.99	**.584** 14.83	**.406** 10.31	**.060** 1.52	**.232** 5.89	53106-1
		C	**1.246** 31.65	**.931** 23.65	**.531** 13.49	**.625** 15.88	**.060** 1.52	**.232** 5.89	33464*
		C	**1.168** 29.67	**.931** 23.65	**.531** 13.49	**.468** 11.89	**.060** 1.52	**.232** 5.89	2-321298-6
	1/4 M6	C	**1.246** 31.65	**.931** 23.65	**.531** 13.49	**.625** 15.88	**.060** 1.52	**.232** 5.89	2-33465-1
		C	**1.168** 29.67	**.931** 23.65	**.531** 13.49	**.468** 11.89	**.060** 1.52	**.232** 5.89	321598* 2-321598-3
		C	**1.168** 29.67	**.931** 23.65	**.531** 13.49	**.468** 11.89	**.057** 1.45	**.232** 5.89	2-321598-4
		90° Bent	—	—	**.390** 9.91	**.625** 15.86	**.057** 1.45	**.233** 5.89	35678
	5/16 M8	C	**1.246** 31.65	**.931** 23.65	**.531** 13.49	**.625** 15.88	**.060** 1.52	**.232** 5.89	33466* 2-33466-3
	3/8	C	**1.246** 31.65	**.931** 23.65	**.531** 13.49	**.625** 15.88	**.060** 1.52	**.232** 5.89	33467* 2-33467-3
	1/2 M12	C	**1.840** 46.74	**1.400** 35.56	**1.000** 25.40	**.875** 22.23	**.060** 1.52	**.232** 5.89	320344*
		A	**2.033** 51.64	**1.400** 35.56	**1.000** 25.40	**1.250** 31.75	**.060** 1.52	**.232** 5.89	36808
	5/8	A	**2.033** 51.64	**1.400** 35.56	**1.000** 25.40	**1.250** 31.75	**.060** 1.52	**.232** 5.89	36809
	3/4	A	**2.033** 51.64	**1.400** 35.56	**1.000** 25.40	**1.250** 31.75	**.060** 1.52	**.232** 5.89	36810

Note: Part numbers are shown as loose piece over tape mounted product.
* Part numbers are available in small quantity packages.
[1] Requires a 69875 standard TAPETRONIC machine for application.
[2] Requires a 68250-1 Heavy Duty TAPETRONIC machine for application.

Ring Tongue Terminals

Material and Finish:

Terminal Body — Copper per ASTM B-152

Plating — Tin per MIL-T-10727

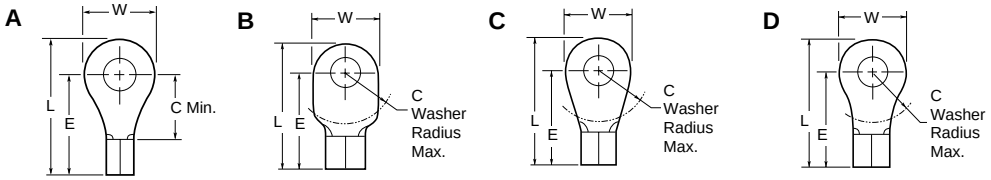

Wire Size Circular Mils [mm²]	Stud Size	Style	Dimensions L Max.	Dimensions E Max.	Dimensions C	Dimensions W	Material Thickness Max.	Wire Barrel I.D. Min.	Part Numbers
4 33,100–52,600 [16.8–26.7]	10	A	**1.314** 33.38	**.978** 24.84	**.516** 13.11	**.656** 16.66	**.073** 1.85	**.296** 7.52	33468*
		C	**1.199** 30.45	**.946** 24.03	**.437** 11.10	**.500** 12.70	**.073** 1.85	**.280** 7.11	33114
	1/4 M6	A	**1.314** 33.38	**.978** 24.84	**.516** 13.11	**.656** 16.66	**.073** 1.85	**.296** 7.52	33469*
		C	**1.199** 30.45	**.946** 24.03	**.437** 11.10	**.500** 12.70	**.073** 1.85	**.280** 7.11	31811†
	5/16 M8	C	**1.324** 33.63	**1.009** 25.63	**.500** 12.70	**.625** 15.88	**.073** 1.85	**.280** 7.11	33115
	3/8	C	**1.324** 33.63	**1.009** 25.63	**.500** 12.70	**.625** 15.88	**.073** 1.85	**.280** 7.11	31812
	7/16	A	**1.314** 33.38	**.978** 24.84	**.516** 13.11	**.656** 16.66	**.073** 1.85	**.296** 7.52	320743
	1/2 M12	A	**2.090** 53.09	**1.462** 37.13	**1.000** 25.40	**1.250** 31.75	**.073** 1.85	**.296** 7.52	35668*
		B	**1.902** 48.31	**1.462** 37.13	**1.000** 25.40	**.875** 22.23	**.073** 1.85	**.296** 7.52	327175*
	5/8 M16	A	**2.090** 53.09	**1.462** 37.13	**1.000** 25.40	**1.250** 31.75	**.073** 1.85	**.296** 7.52	35669
	3/4	A	**2.090** 53.09	**1.462** 37.13	**1.000** 25.40	**1.250** 31.75	**.073** 1.85	**.296** 7.52	35670
2 52,600–83,700 [26.7–42.4]	10	B	**1.527** 38.79	**1.212** 30.78	**.531** 13.49	**.625** 15.88	**.073** 1.85	**.370** 9.40	330301
	1/4 M6	B	**1.527** 38.79	**1.212** 30.78	**.531** 13.49	**.625** 15.88	**.073** 1.85	**.370** 9.40	320383*
		D	**1.657** 42.09	**1.212** 30.78	**.531** 13.49	**.890** 22.61	**.073** 1.85	**.370** 9.40	320138
	5/16 M8	B	**1.527** 38.79	**1.212** 30.78	**.531** 13.49	**.625** 15.88	**.073** 1.85	**.370** 9.40	322870*
	3/8	B	**1.527** 38.79	**1.212** 30.78	**.531** 13.49	**.625** 15.88	**.073** 1.85	**.370** 9.40	321600*
		D	**1.657** 42.09	**1.212** 30.78	**.531** 13.49	**.890** 22.61	**.073** 1.85	**.370** 9.40	35184
	7/16	D	**1.657** 42.09	**1.212** 30.78	**.531** 13.49	**.890** 22.61	**.073** 1.85	**.370** 9.40	320741
	1/2 M12	D	**1.657** 42.09	**1.212** 30.78	**.531** 13.49	**.890** 22.61	**.073** 1.85	**.370** 9.40	35185*
		D	**2.516** 63.91	**1.888** 47.96	**1.125** 28.58	**1.250** 31.75	**.073** 1.85	**.370** 9.40	323291
	5/8 M16	D	**2.516** 63.91	**1.888** 47.96	**1.125** 28.58	**1.250** 31.75	**.073** 1.85	**.370** 9.40	320754
1/0 83,700–119,500 [42.4–60.6]	1/4 M6	C	**1.956** 49.68	**1.529** 38.84	**.625** 15.88	**.875** 22.23	**.073** 1.85	**.444** 11.28	36915
		C	**1.925** 48.90	**1.532** 38.91	**.625** 15.88	**.807** 20.50	**.073** 1.85	**.444** 11.28	321866
	5/16 M8	C	**1.956** 49.68	**1.529** 38.84	**.625** 15.88	**.875** 22.23	**.073** 1.85	**.444** 11.28	36916*
		C	**1.925** 48.90	**1.532** 38.91	**.625** 15.88	**.807** 20.50	**.073** 1.85	**.444** 11.28	321867*
	3/8	C	**1.925** 48.90	**1.532** 38.91	**.625** 15.88	**.807** 20.50	**.073** 1.85	**.444** 11.28	321868
	7/16	C	**1.956** 49.68	**1.529** 38.84	**.625** 15.88	**.875** 22.23	**.073** 1.85	**.444** 11.28	36918
	1/2 M12	C	**2.678** 68.02	**2.063** 52.40	**1.125** 28.58	**1.265** 32.13	**.073** 1.85	**.444** 11.28	322291

* Part numbers are available in small quantity packages.

Ring Tongue Terminals

Material and Finish:

Terminal Body — Copper per ASTM B-152

Plating — Tin per MIL-T-10727

B

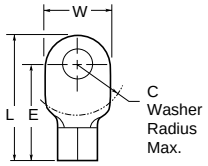

C

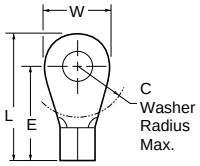

Wire Size Circular Mils [mm²]	Stud Size	Style	Dimensions L Max.	E Max.	C	W	Material Thickness Max.	Wire Barrel I.D. Min.	Part Numbers
1/0 83,700–119,500 [42.4–60.6]	5/8 M16	C	**2.678** 68.02	**2.063** 52.40	**1.125** 28.58	**1.265** 32.13	**.073** 1.85	**.444** 11.28	320744
	3/4	C	**2.678** 68.02	**2.063** 52.40	**1.125** 28.58	**1.265** 32.13	**.073** 1.85	**.444** 11.28	320748
2/0 119,500–150,500 [60.6–76.3]	1/4 M6	C	**1.930** 49.02	**1.550** 39.37	**.625** 15.88	**.926** 23.52	**.083** 2.11	**.504** 12.80	321869
		C	**2.000** 50.80	**1.545** 39.24	**.625** 15.88	**.946** 24.03	**.083** 2.11	**.504** 12.80	36921
	5/16 M8	C	**1.930** 49.02	**1.550** 39.37	**.625** 15.88	**.926** 23.52	**.083** 2.11	**.504** 12.80	321870*
		C	**2.000** 50.80	**1.545** 39.24	**.625** 15.88	**.946** 24.03	**.083** 2.11	**.504** 12.80	36922
	3/8	C	**1.930** 49.02	**1.550** 39.37	**.625** 15.88	**.926** 23.52	**.083** 2.11	**.504** 12.80	321871*
	7/16	C	**1.930** 49.02	**1.550** 39.37	**.625** 15.88	**.926** 23.52	**.083** 2.11	**.504** 12.80	321872
	1/2 M12	C	**1.930** 49.02	**1.550** 39.37	**.625** 15.88	**.926** 23.52	**.083** 2.11	**.504** 12.80	321873*
		C	**2.000** 50.80	**1.545** 39.24	**.625** 15.88	**.946** 24.03	**.083** 2.11	**.504** 12.80	36925*
	5/8 M16	C	**2.671** 67.84	**2.056** 52.22	**1.125** 28.58	**1.270** 32.26	**.083** 2.11	**.504** 12.80	322224
	3/4	C	**2.671** 67.84	**2.056** 52.22	**1.125** 28.58	**1.270** 32.26	**.083** 2.11	**.504** 12.80	322225
3/0 150,500–190,000 [76.3–96.3]	1/4	B	**2.112** 53.64	**1.622** 41.20	**.625** 15.88	**1.020** 25.91	**.094** 2.39	**.565** 14.35	323868
	5/16 M8	B	**2.112** 53.64	**1.622** 41.20	**.625** 15.88	**1.020** 25.91	**.094** 2.39	**.565** 14.35	321874
		B	**2.143** 54.43	**1.643** 41.73	**.625** 15.88	**1.082** 27.48	**.094** 2.39	**.565** 14.35	320266
	3/8	B	**2.112** 53.64	**1.622** 41.20	**.625** 15.88	**1.020** 25.91	**.094** 2.39	**.565** 14.35	321875*
	7/16	B	**2.112** 53.64	**1.622** 41.20	**.625** 15.88	**1.020** 25.91	**.094** 2.39	**.565** 14.35	321876
	1/2 M12	B	**2.143** 54.43	**1.643** 41.73	**.625** 15.88	**1.082** 27.48	**.094** 2.39	**.565** 14.35	36929*
		B	**2.112** 53.64	**1.622** 41.20	**.625** 15.88	**1.020** 25.91	**.094** 2.39	**.565** 14.35	321877*
4/0 190,000–231,000 [96.3–117]	1/4 M6	B	**2.206** 56.03	**1.644** 41.76	**.625** 15.88	**1.150** 29.21	**.105** 2.67	**.635** 16.13	2-36932-2
	5/16 M8	B	**2.537** 64.44	**1.985** 50.42	**1.078** 27.38	**1.150** 29.21	**.105** 2.67	**.635** 16.13	321271
	3/8	B	**2.178** 55.32	**1.657** 42.09	**.625** 15.88	**1.087** 27.61	**.105** 2.67	**.635** 16.13	321878*
	7/16	B	**2.178** 55.32	**1.657** 42.09	**.625** 15.88	**1.087** 27.61	**.105** 2.67	**.635** 16.13	321879
	1/2 M12	B	**2.178** 55.32	**1.657** 42.09	**.625** 15.88	**1.087** 27.61	**.105** 2.67	**.635** 16.13	321880*
		B	**2.206** 56.03	**1.644** 41.76	**.625** 15.88	**1.150** 29.21	**.105** 2.67	**.635** 16.13	36934*
	5/8 M16	B	**2.206** 56.03	**1.644** 41.76	**.625** 15.88	**1.150** 29.21	**.105** 2.67	**.635** 16.13	36935
		C	**2.732** 69.39	**2.117** 53.77	**1.078** 27.38	**1.275** 32.39	**.105** 2.67	**.635** 16.13	322227
250–300 MCM 231,000–300,000 [117–152]	3/8	B	**2.602** 66.09	**1.987** 50.47	**.625** 15.88	**1.435** 36.45	**.130** 3.30	**.753** 19.13	322252
	7/16	B	**2.602** 66.09	**1.987** 50.47	**.625** 15.88	**1.435** 36.45	**.130** 3.30	**.753** 19.13	322253
	1/2 M12	B	**2.602** 66.09	**1.987** 50.47	**.625** 15.88	**1.435** 36.45	**.130** 3.30	**.753** 19.13	322254

* Part numbers are available in small quantity packages.

For complete product information, order Catalog 65505

Products for Industrial & Commercial Applications

Dimensions are shown for reference purposes only.

Dimensions are in inches and millimeters unless otherwise specified. Values in brackets are metric equivalents.

Specifications subject to change.

Technical Support Center
1-800-522-6752
www.tycoelectronics.com

Ring Tongue Terminals

Material and Finish:

Terminal Body — Copper per ASTM B-152

Plating — Tin per MIL-T-10727

B

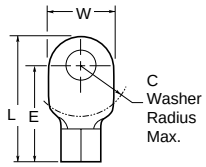

Wire Size Circular Mils [mm²]	Stud Size	Style	Dimensions L Max.	E Max.	C	W	Material Thickness Max.	Wire Barrel I.D. Min.	Part Numbers
300–350 MCM 300,000–380,000 [152–193]	3/8	B	**2.671** 67.84	**2.056** 52.22	**.625** 15.88	**1.545** 39.24	**.140** 3.56	**.819** 20.80	322257
	1/2 M12	B	**2.671** 67.84	**2.056** 52.22	**.625** 15.88	**1.545** 39.24	**.140** 3.56	**.819** 20.80	322259
		B	**3.422** 86.92	**2.675** 67.95	**1.250** 31.75	**1.545** 39.24	**.140** 3.56	**.819** 20.80	322764
400 MCM 380,000–478,000 [193–242]	3/8	B	**2.790** 70.87	**2.175** 55.25	**.625** 15.88	**1.749** 44.42	**.158** 4.01	**.930** 23.62	322262
	1/2 M12	B	**2.790** 70.87	**2.175** 55.25	**.625** 15.88	**1.749** 44.42	**.158** 4.01	**.930** 23.62	322264
500–600 MCM 478,000–600,000 [242–304]	3/8	B	**3.187** 80.95	**2.447** 62.15	**.750** 19.05	**2.015** 51.18	**.182** 4.62	**1.075** 27.31	322267
	1/2 M12	B	**3.187** 80.95	**2.447** 62.15	**.750** 19.05	**2.015** 51.18	**.182** 4.62	**1.075** 27.31	322269
		B	**4.176** 106.07	**3.194** 81.13	**1.500** 38.10	**2.015** 51.18	**.182** 4.62	**1.075** 27.31	322773

Heavy Duty Ring Tongue Terminals

Material and Finish:

Terminal Body — Copper per ASTM B-152

Plating — Tin per MIL-T-10727

A B C

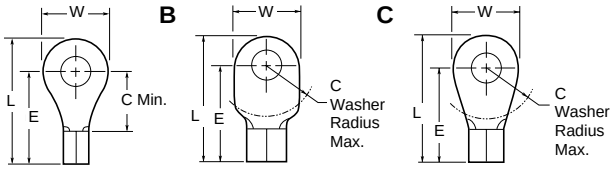

Wire Size Circular Mils [mm²]	Stud Size	Style	Dimensions L Max.	E Max.	C	W	Material Thickness Max.	Wire Barrel I.D. Min.	Part Numbers
16–14 2,050–5,180 [1.04–2.62]	8 M4	A	**.723** 18.36	**.549** 13.94	**.281** 7.14	**.343** 8.71	**.050** 1.27	**.105** 2.67	35432
	10	A	**.723** 18.36	**.549** 13.94	**.281** 7.14	**.343** 8.71	**.050** 1.27	**.105** 2.67	34567* 2-34567-1
	1/4 M6	A	**.865** 21.97	**.612** 15.54	**.344** 8.74	**.500** 12.70	**.050** 1.27	**.105** 2.67	35775*
	5/16 M8	A	**.865** 21.97	**.612** 15.54	**.344** 8.74	**.500** 12.70	**.050** 1.27	**.105** 2.67	35776
	3/8	A	**1.271** 32.28	**.893** 22.68	**.625** 15.88	**.750** 19.05	**.050** 1.27	**.105** 2.67	327732
	1/2 M12	A	**1.271** 32.28	**.893** 22.68	**.625** 15.88	**.750** 19.05	**.050** 1.27	**.105** 2.67	321165*
6 20,800–33,100 [10.5–16.8]	1/4 M6	B	**1.184** 30.07	**.931** 23.65	**.370** 9.40	**.500** 12.70	**.095** 2.41	**.232** 5.89	330969
4 33,100–52,600 [16.8–26.7]	5/16 M8	C	**1.535** 38.99	**1.193** 30.30	**.456** 11.58	**.679** 17.25	**.095** 2.41	**.296** 7.52	1-331420-0

Note: Part numbers are shown as loose piece over tape mounted product.
* Part numbers are available in small quantity packages.

Rectangular Tongue Terminals

Material and Finish:

Terminal Body — Copper per ASTM B-152

Plating — Tin per MIL-T-10727

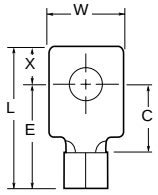

Wire Size Circular Mils [mm²]	Stud Size	Dimensions L Max.	E Max.	C Min.	W	X	Material Thickness Max.	Wire Barrel I.D. Min.	Part Numbers
16–14 2,050–5,180 [1.04–2.62]	6 M3.5	**.529** 13.44	**.384** 9.75	**.203** 5.16	**.296** 7.52	**.140** 3.56	**.033** 0.84	**.085** 2.16	2-34266-1
12–10 5,180–13,100 [2.62–6.64]	6 M3.5	**.631** 16.03	**.486** 12.34	**.218** 5.54	**.290** 7.37	**.140** 3.56	**.042** 1.07	**.129** 3.28	2-321499-1

Spade Tongue Terminals

Material and Finish:

Terminal Body — Copper per ASTM B-152

Plating — Tin per MIL-T-10727

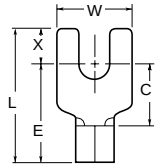

Wire Size Circular Mils [mm²]	Stud Size	Dimensions L Max.	E Max.	C Min.	W	X	Material Thickness Max.	Wire Barrel I.D. Min.	Part Numbers
22–16 509–3,260 [0.26–1.65]	2 M2	**.504** 12.80	**.384** 9.75	**.203** 5.16	**.182** 4.62	**.115** 2.92	**.033** 0.84	**.061** 1.55	53555-1*
	6 M3.5	**.530** 13.46	**.384** 9.75	**.203** 5.16	**.297** 7.54	**.141** 3.58	**.033** 0.84	**.061** 1.55	36195* 2-36195-3
		.623 15.82	**.493** 12.52	**.312** 7.92	**.250** 6.35	**.125** 3.18	**.033** 0.84	**.061** 1.55	323127*
	10	**.685** 17.40	**.493** 12.52	**.312** 7.92	**.375** 9.53	**.187** 4.75	**.033** 0.84	**.061** 1.55	34118* 2-34118-2
16-14 2,050-5,180 [1.04-2.62]	6 M3.5	**.530** 13.46	**.384** 9.75	**.203** 5.16	**.297** 7.54	**.141** 3.58	**.033** 0.84	**.085** 2.16	322996* 2-322996-1
		.623 15.82	**.493** 12.52	**.312** 7.92	**.244** 6.20	**.125** 3.18	**.033** 0.84	**.085** 2.16	330827
16–14 2,050–5,180 [1.04–2.62]	8 M4	**.685** 17.40	**.493** 12.52	**.312** 7.92	**.385** 9.78	**.187** 4.75	**.033** 0.84	**.085** 2.16	34128*
	10	**.685** 17.40	**.493** 12.52	**.312** 7.92	**.385** 9.78	**.187** 4.75	**.033** 0.84	**.085** 2.16	34129*
12–10 5,180–13,100 [2.62–6.64]	6 M3.5	**.631** 16.03	**.486** 12.34	**.218** 5.54	**.282** 7.16	**.140** 3.56	**.042** 1.07	**.129** 3.28	322451*
	8 M4	**.991** 25.17	**.757** 19.23	**.468** 11.89	**.312** 7.92	**.250** 6.35	**.042** 1.07	**.129** 3.28	32995*
	10	**.772** 19.61	**.564** 14.33	**.296** 7.52	**.375** 9.53	**.203** 5.16	**.042** 1.07	**.129** 3.28	35495* 2-35495-2

Note: Part numbers are shown as loose piece over tape mounted product.
* Part numbers are available in small quantity packages.

Short Spring Spade Tongue Terminals

Material and Finish:

Terminal Body — Phosphor Bronze per ASTM B-103

Plating — Tin per MIL-T-10727

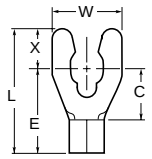

Wire Size Circular Mils [mm²]	Stud Size	Dimensions L Max.	E Max.	C Min.	W	X	Material Thickness Max.	Wire Barrel I.D. Min.	Part Numbers
22–16 509–3,260 [0.26–1.65]	4	**.576** 14.63	**.431** 10.95	**.250** 6.35	**.203** 5.16	**.140** 3.56	**.033** 0.84	**.061** 1.55	53175-1*
	6 M3.5	**.576** 14.63	**.431** 10.95	**.250** 6.35	**.250** 6.35	**.140** 3.56	**.033** 0.84	**.061** 1.55	53120-1* 53120-2
	8 M4	**.637** 16.18	**.462** 11.73	**.281** 7.14	**.244** 6.20	**.170** 4.32	**.033** 0.84	**.061** 1.55	53831-2
	10	**.685** 17.40	**.462** 11.73	**.281** 7.14	**.294** 7.47	**.218** 5.54	**.033** 0.84	**.061** 1.55	53832-2
16–14 2,050–5,180 [1.04–2.62]	6 M3.5	**.576** 14.63	**.431** 10.95	**.250** 6.35	**.250** 6.35	**.140** 3.56	**.033** 0.84	**.085** 2.16	53123-1* 53123-2
	8 M4	**.637** 16.18	**.462** 11.73	**.281** 7.14	**.375** 9.53	**.170** 4.32	**.033** 0.84	**.085** 2.16	53124-1* 53124-2
	10	**.685** 17.40	**.462** 11.73	**.281** 7.14	**.406** 10.31	**.218** 5.54	**.033** 0.84	**.085** 2.16	53125-1* 53125-2
		.685 17.40	**.462** 11.73	**.281** 7.14	**.294** 7.47	**.218** 5.54	**.033** 0.84	**.085** 2.16	53834-2
12–10 5,180–13,100 [2.62–6.64]	6 M3.5	**.636** 16.15	**.452** 11.48	**.174** 4.42	**.250** 6.35	**.179** 4.55	**.042** 1.07	**.129** 3.28	53126-1* 53126-2
	8 M4	**.729** 18.52	**.554** 14.07	**.276** 7.01	**.312** 7.92	**.170** 4.32	**.042** 1.07	**.129** 3.28	53835-1 53835-2
	10	**.777** 19.74	**.554** 14.07	**.276** 7.01	**.406** 10.31	**.218** 5.54	**.042** 1.07	**.129** 3.28	53128-1* 53128-2
		.777 19.74	**.554** 14.07	**.276** 7.01	**.312** 7.92	**.218** 5.54	**.042** 1.07	**.129** 3.28	53836-2

Note: Part numbers are shown as loose piece over tape mounted product.
* Part numbers are available in small quantity packages.

Long Spring Spade Tongue Terminals

Material and Finish:

Terminal Body — Phosphor Bronze per ASTM B-103

Plating — Tin per MIL-T-10727

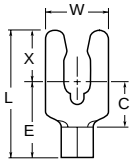

Wire Size Circular Mils [mm²]	Stud Size	Dimensions L Max.	E Max.	C Min.	W	X	Material Thickness Max.	Wire Barrel I.D. Min.	Part Numbers
16–14 2,050–5,180 [1.04–2.62]	8 M4	**.756** 19.20	**.461** 11.71	**.270** 6.86	**.281** 7.14	**.290** 7.37	**.033** 0.84	**.085** 2.16	52713-1*
	10	**.782** 19.86	**.474** 12.04	**.283** 7.19	**.343** 8.71	**.303** 7.70	**.033** 0.84	**.085** 2.16	52714-1*
12–10 5,180–13,100 [2.62–6.64]	10	**.896** 22.76	**.583** 14.81	**.305** 7.75	**.375** 9.53	**.308** 7.82	**.042** 1.07	**.129** 3.28	52717-2

* Part numbers are shown as loose piece over tape mounted product.

For complete product information, order Catalog 65505

Products for Industrial & Commercial Applications
Dimensions are shown for reference purposes only.
Dimensions are in inches and millimeters unless otherwise specified. Values in brackets are metric equivalents.
Specifications subject to change.
Technical Support Center 1-800-522-6752 www.tycoelectronics.com

Flanged Spade Tongue Terminals

Material and Finish:

Terminal Body — Copper per ASTM B-152

Plating — Tin per MIL-T-10727

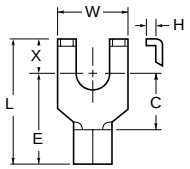

Wire Size Circular Mils [mm²]	Stud Size	Dimensions L Max.	E Max.	C Min.	W	X	H Min.	Material Thickness Max.	Wire Barrel I.D. Min.	Part Numbers
22–16 509–3,260 [0.26–1.65]	6 M3.5	**.514** 13.06	**.384** 9.75	**.203** 5.16	**.296** 7.52	**.125** 3.18	**.045** 1.14	**.033** 0.84	**.061** 1.55	2-320749-2
	8 M4	**.514** 13.06	**.384** 9.75	**.203** 5.16	**.296** 7.52	**.125** 3.18	**.045** 1.14	**.033** 0.84	**.061** 1.55	52730* 52730-1
16–14 2,050–5,180 [1.04–2.62]	6 M3.5	**.514** 13.06	**.384** 9.75	**.203** 5.16	**.294** 7.47	**.125** 3.18	**.047** 1.19	**.033** 0.84	**.085** 2.16	2-320855-1
	8 M4	**.514** 13.06	**.384** 9.75	**.203** 5.16	**.294** 7.47	**.125** 3.18	**.047** 1.19	**.033** 0.84	**.085** 2.16	320856* 2-320856-1
12-10 5,180–13,100 [2.62–6.64]	8 M4	**.694** 17.63	**.518** 13.16	**.250** 6.35	**.416** 10.57	**.171** 4.34	**.052** 1.32	**.042** 1.07	**.129** 3.28	323143
	10	**.694** 17.63	**.518** 13.16	**.250** 6.35	**.416** 10.57	**.171** 4.34	**.052** 1.32	**.042** 1.07	**.129** 3.28	2-323144-1

Note: Part numbers are shown as loose piece over tape mounted product.
*Part numbers are available in small quantity packages.

Slotted Ring Tongue Terminals

Material and Finish:

Terminal Body — Copper per ASTM B-152

Plating — Tin per MIL-T-10727

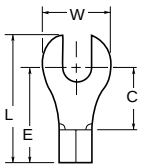

Wire Size Circular Mils [mm²]	Stud Size	Dimensions L Max.	E Max.	C Min.	W	Material Thickness Max.	Wire Barrel I.D. Min.	Part Numbers
22–16 509–3,260 [0.26–1.65]	4	**.425** 10.80	**.353** 8.97	**.172** 4.37	**.182** 4.62	**.033** 0.84	**.061** 1.55	321288*

* Part Numbers are available in small quantity packages.

For complete product information, order Catalog 65505

Products for Industrial & Commercial Applications
Dimensions are shown for reference purposes only.
Dimensions are in inches and millimeters unless otherwise specified. Values in brackets are metric equivalents.
Specifications subject to change.
Technical Support Center 1-800-522-6752 www.tycoelectronics.com

Hook Tongue Terminals

Material and Finish:

Terminal Body— Copper per ASTM B-152

Plating — Tin per MIL-T-10727

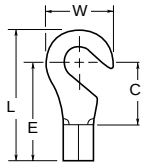

Wire Size Circular Mils [mm²]	Stud Size	Dimensions L Max.	E Max.	C Min.	W	Material Thickness Max.	Wire Barrel I.D. Min.	Part Numbers
12–10 5,180–13,100 [2.62–6.64]	1/4 M6	**1.004** 25.50	**.736** 18.69	**.468** 11.89	**.531** 13.49	**.042** 1.07	**.129** 3.28	321632

Tab Tongue Terminals

Material and Finish:

Terminal Body— Copper per ASTM B-152

Plating — Tin per MIL-T-10727

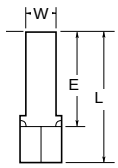

Wire Size Circular Mils [mm²]	Dimensions L Max.	E Max.	W	Material Thickness Max.	Wire Barrel I.D. Min.	Part Numbers
12 – 10 5,180 – 13,100 [2.62 – 6.64]	**.863** 21.92	**.613** 15.57	**.125** 3.18	**.042** 1.07	**.129** 3.28	322443
8 13,100 – 20,800 [6.64 – 10.5]	**.937** 23.80	**.625** 15.88	**.221** 5.61	**.051** 1.30	**.177** 4.50	322445

Flag Ring Tongue Terminals

Material and Finish:

Terminal Body — Copper per ASTM B-152

Plating — Tin per MIL-T-10727

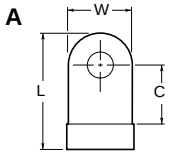

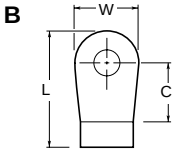

Wire Size Circular Mils [mm²]	Stud Size	Style	Dimensions L Max.	C Min.	W	Material Thickness Max.	Wire Barrel I.D. Min.	Part Numbers
16–14 2,050–5,180 [1.04–2.62]	8 M4	A	**.579** 14.71	**.250** 6.35	**.312** 7.92	**.033** 0.84	**.085** 2.16	325069
12–10 5,180–13,100 [2.62–6.64]	8 M4	A	**.702** 17.83	**.281** 7.14	**.375** 9.53	**.042** 1.07	**.129** 3.28	36270
	10	A	**.702** 17.83	**.281** 7.14	**.375** 9.53	**.042** 1.07	**.129** 3.28	36271*
	1/4 M6	A	**.702** 17.83	**.281** 7.14	**.375** 9.53	**.042** 1.07	**.129** 3.28	36272
6 20,800–33,100 [10.5–16.8]	10	A	**.841** 21.36	**.250** 6.35	**.500** 12.70	**.048** 1.22	**.224** 5.69	323196
	1/4 M6	A	**.960** 24.38	**.371** 9.42	**.500** 12.70	**.048** 1.22	**.224** 5.69	321576
	5/16 M8	B	**1.200** 30.48	**.528** 13.41	**.625** 15.88	**.048** 1.22	**.224** 5.69	321056
4 33,100–52,600 [16.8–26.7]	10	A	**1.048** 26.62	**.368** 9.35	**.546** 13.87	**.051** 1.30	**.280** 7.11	321059
	1/4 M6	A	**1.048** 26.62	**.368** 9.35	**.546** 13.87	**.051** 1.30	**.280** 7.11	321275
	5/16 M8	B	**1.278** 32.46	**.530** 13.46	**.682** 17.32	**.051** 1.30	**.280** 7.11	321060

* Part numbers are available in small quantity packages.

For complete product information, order Catalog 65505

Products for Industrial & Commercial Applications
Dimensions are shown for reference purposes only.
Dimensions are in inches and millimeters unless otherwise specified. Values in brackets are metric equivalents.
Specifications subject to change.
Technical Support Center 1-800-522-6752 www.tycoelectronics.com

Flag Ring Tongue Terminals

Material and Finish:

Terminal Body — Copper per ASTM B-152

Plating — Tin per MIL-T-10727



Wire Size Circular Mils [mm²]	Stud Size	Style	Dimensions L Max.	Dimensions C Min.	Dimensions W	Material Thickness Max.	Wire Barrel I.D. Min.	Part Numbers
2 52,600–83,700 [26.7–42.4]	10	B	**1.437** 36.50	**.534** 13.56	**.713** 18.11	**.060** 1.52	**.357** 9.07	321063
	1/4 M6	B	**1.437** 36.50	**.534** 13.56	**.713** 18.11	**.060** 1.52	**.357** 9.07	321201
	5/16 M8	B	**1.437** 36.50	**.534** 13.56	**.713** 18.11	**.060** 1.52	**.357** 9.07	321064
	3/8	B	**1.437** 36.50	**.534** 13.56	**.713** 18.11	**.060** 1.52	**.357** 9.07	321253
1/0 83,700–119,500 [42.4–60.6]	5/16 M8	A	**1.733** 44.02	**.666** 16.92	**.875** 22.23	**.073** 1.85	**.444** 11.28	321580
	3/8	A	**1.733** 44.02	**.666** 16.92	**.875** 22.23	**.073** 1.85	**.444** 11.28	321066
2/0 119,500–150,500 [60.6–76.3]	5/16 M8	A	**1.848** 46.94	**.671** 17.04	**.920** 23.37	**.083** 2.11	**.504** 12.80	321582
	3/8	A	**1.848** 46.94	**.671** 17.04	**.920** 23.37	**.083** 2.11	**.504** 12.80	321584

Parallel Splices

Material and Finish:

Splice Body — Copper per ASTM B-152

Plating — Tin per MIL-T-10727



Wire Size Circular Mils[1] [mm²]	Dimensions L Max.	Dimensions I.D. Min.	Dimensions O.D. Max.	Material Thickness Max.	Part Numbers
22–16 509–3,260 [0.26–1.65]	**.301** 7.65	**.061** 1.55	**.141** 3.58	**.033** 0.84	34130*
16–14 2,050–5,180 [1.04–2.62]	**.301** 7.65	**.085** 2.16	**.165** 4.19	**.033** 0.84	34137*
12–10 5,180–13,100 [2.62–6.64]	**.343** 8.71	**.129** 3.28	**.226** 5.74	**.042** 1.07	34138*
8 13,100–20,800 [6.64–10.5]	**.375** 9.53	**.172** 4.37	**.296** 7.52	**.051** 1.30	34318*
1/0 83,700–119,500 [42.4–60.6]	**.734** 18.64	**.444** 11.28	**.613** 15.57	**.073** 1.85	36946*
2/0 119,500–150,500 [60.6–76.3]	**.734** 18.64	**.504** 12.80	**.703** 17.86	**.083** 2.11	36948*
3/0 150,500–190,000 [76.3–96.3]	**.749** 19.02	**.565** 14.35	**.775** 19.69	**.094** 2.39	36909
250–300 MCM 231,000–300,000 [117–152]	**1.062** 26.97	**.753** 19.13	**1.054** 26.77	**.130** 3.30	322275
300–350 MCM 300,000–380,000 [152–193]	**1.124** 28.55	**.819** 20.80	**1.137** 28.88	**.140** 3.56	322276
400 MCM 380,000–478,000 [193–242]	**1.249** 31.72	**.925** 23.50	**1.287** 32.69	**.158** 4.01	322277
500–600 MCM 478,000–600,000 [242–304]	**1.421** 36.09	**1.070** 27.18	**1.483** 37.67	**.182** 4.62	322278

* Part numbers are available in small quantity packages.

[1] When terminating two or more wires in a parallel splice, the combined cross sectional area must be within the listed circular mil area range (CMA)

For complete product information, order Catalog 65505

Products for Industrial & Commercial Applications

Dimensions are shown for reference purposes only.

Dimensions are in inches and millimeters unless otherwise specified. Values in brackets are metric equivalents.

Specifications subject to change.

Technical Support Center
1-800-522-6752
www.tycoelectronics.com

Parallel Splice –– Ovaled

Material and Finish:

Splice Body — Copper per ASTM B-152

Plating — Tin per MIL-T-10727

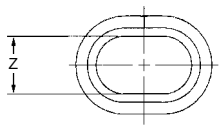

Wire Size Circular Mils[1] [mm²]	Dimensions		Material Thickness Max.	Part Numbers
	Length	Z		
13,100-20,800 [6.44-10.5]	**.385** 9.78	**.132** 3.35	**.048** 1.22	323271

Butt Splices

Material and Finish:

Splice Body — Copper per ASTM B-152

Plating — Tin per MIL-T-10727

Standard

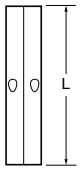

Sight Hole

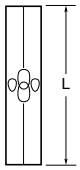

Strap

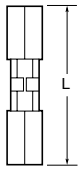

Wire Size Circular Mils[1] [mm²]	Style	Dimensions			Material Thickness Max.	Part Numbers
		L Max.	I.D. Min.	O.D. Max.		
26–22 202–810 [0.1–0.41]	Strap	**.385** 9.78	**.031** 0.79	**.082** 2.08	**.020** 0.51	321198*
24–20 320–1,290 [0.16–0.65]	Strap	**.490** 12.45	**.043** 1.09	**.105** 2.67	**.025** 0.64	324001*
22–16 509–3,260 [0.26–1.65]	Standard	**.578** 14.68	**.061** 1.55	**.141** 3.58	**.033** 0.84	31818* 2-31818-1
	Sight Hole	**.578** 14.68	**.061** 1.55	**.141** 3.58	**.033** 0.84	330367*
16–14 2,050–5,180 [1.04–2.62]	Strap	**.591** 15.01	**.085** 2.16	**.165** 4.19	**.033** 0.84	322459
	Standard	**.567** 14.40	**.085** 2.16	**.165** 4.19	**.033** 0.84	31819* 2-31819-1
	Strap	**.591** 15.01	**.085** 2.16	**.165** 4.19	**.033** 0.84	327025* (No Wire Stop)
	Sight Hole	**.567** 14.40	**.085** 2.16	**.165** 4.19	**.033** 0.84	330368*
14–12 3,260–8,230 [1.65–4.17]	Sight Hole	**.690** 17.53	**.098** 2.49	**.178** 4.52	**.033** 0.84	321280
12–10 5,180–13,100 [2.62–6.64]	Sight Hole	**.567** 14.40	**.129** 3.28	**.226** 5.74	**.042** 1.07	330369*
	Standard	**.565** 14.35	**.129** 3.28	**.226** 5.74	**.042** 1.07	32151*
	Strap	**.765** 19.43	**.129** 3.28	**.226** 5.74	**.042** 1.07	324893
8 13,100–20,800 [6.64–10.5]	Standard	**.827** 21.01	**.172** 4.37	**.296** 7.52	**.051** 1.30	34321*
	Sight Hole	**.827** 21.01	**.172** 4.37	**.296** 7.52	**.051** 1.30	36906*
6 20,800–33,100 [10.5–16.8]	Standard	**1.015** 25.78	**.232** 5.89	**.369** 9.37	**.060** 1.52	34322*
	Sight Hole	**1.015** 25.78	**.232** 5.89	**.369** 9.37	**.060** 1.52	36886*
4 33,100–52,600 [16.8–26.7]	Standard	**1.140** 28.96	**.296** 7.52	**.463** 11.76	**.073** 1.85	34323*
2 52,600–83,700 [26.7–42.4]	Standard	**1.265** 32.13	**.370** 9.40	**.539** 13.69	**.073** 1.85	35189*
	Sight Hole	**1.265** 32.13	**.370** 9.40	**.539** 13.69	**.073** 1.85	322246

* Part numbers are available in small quantity packages.

For complete product information, order Catalog 65505

Products for Industrial & Commercial Applications

Dimensions are shown for reference purposes only.

Dimensions are in inches and millimeters unless otherwise specified. Values in brackets are metric equivalents.

Specifications subject to change.

Technical Support Center
1-800-522-6752
www.tycoelectronics.com

Butt Splices

Material and Finish:

Splice Body — Copper per ASTM B-152

Plating — Tin per MIL-T-10727

A

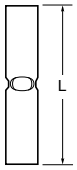

Wire Circular Mils[1] [mm²]	Style	Dimensions L Max.	Dimensions I.D. Min.	Dimensions O.D. Max.	Material Thickness Max.	Part Numbers
1/0 83,700–119,500 [42.4–60.6]	A	**1.412** 35.86	**.444** 11.28	**.613** 15.57	**.073** 1.85	36957*
2/0 119,500–150,500 [60.6–76.3]	A	**1.437** 36.50	**.504** 12.80	**.693** 17.60	**.083** 2.11	36958*
3/0 150,500–190,000 [76.3–96.3]	A	**1.480** 37.60	**.565** 14.35	**.775** 19.69	**.094** 2.39	36959*
4/0 190,000–231,000 [96.3–117]	A	**1.484** 37.69	**.635** 16.13	**.869** 22.07	**.105** 2.67	36960*
250–300 MCM 231,000–300,000 [117–152]	A	**2.093** 53.16	**.753** 19.13	**1.054** 26.77	**.130** 3.30	322279
300–350 MCM 300,000–380,000 [152–193]	A	**2.217** 56.31	**.819** 20.80	**1.137** 28.88	**.140** 3.56	322280
500–600 MCM 478,000–600,000 [242–304]	A	**2.811** 71.40	**1.070** 27.18	**1.483** 37.67	**.182** 4.62	322282

* Part numbers are available in small quantity packages.
[1] When terminating two or more wires in either end of a butt splice, the combined cross sectional area must be within the listed circular mil area range (CMA).

The DIAMOND GRIP Terminal

The DIAMOND GRIP product line of terminals and splices is designed for completely uniform reliability under the most critical conditions of vibration, thermal shock, corrosion, tension and current overload. The AMP mated tool/terminal concept represents a total approach to wire termination and takes into account all the factors of circuit termination.

The uniformity of appearance of AMP terminations is repeated by their uniformity in performance—made possible by designing the terminal and the tooling to match precisely. This promotes fast and easy crimping and assures precise crimping pressure for every wire size, regardless of the skill of the operator. The result is the best circuit termination at the lowest applied cost. And this is true for all terminations from first to last, week after week, month after month.

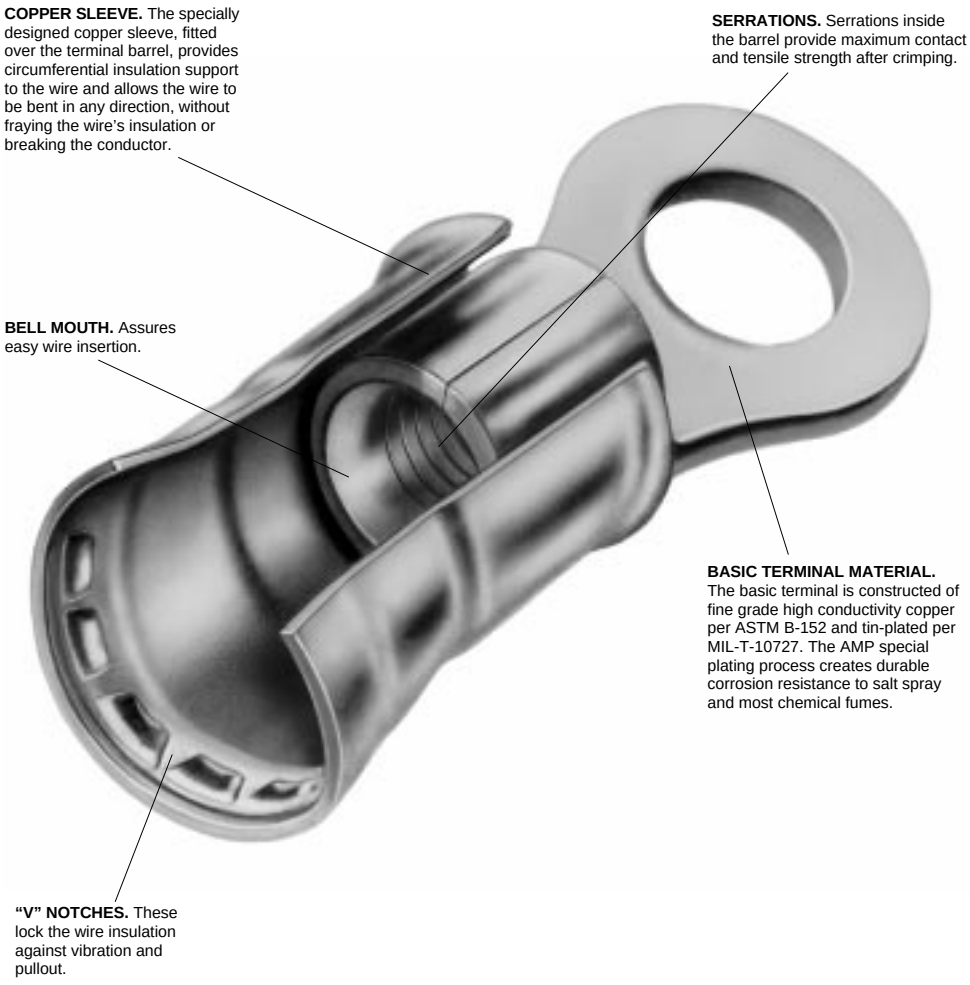

The Crimp

After the wire is inserted into the barrel, the matching dies in the AMP tool close over the barrel, exerting great pressure. This causes the wire strands to flow into the serrations of the terminal barrel as it is compressed around them, forming a homogenous mass of the strands and terminal barrel. This maximum contact assures optimum conductivity of the termination.

Temperature Rating: 170°C Max.

DIAMOND GRIP Terminals and Splices (Use DIAMOND GRIP Tooling)

AMP Wire Range	UL Listed	CSA LR 7189 Certified
22–16	22–16 Stranded	22–16 Stranded
16–14	16–14 Stranded	16–14 Stranded
16–14 HD	16–14 HD Stranded	—
12-10	12–10 Stranded	12–10 Stranded

For complete product information, order Catalog 65505

Products for Industrial & Commercial Applications
Dimensions are shown for reference purposes only.
Dimensions are in inches and millimeters unless otherwise specified. Values in brackets are metric equivalents.
Specifications subject to change.
Technical Support Center
1-800-522-6752
www.tycoelectronics.com

Ring Tongue Terminals

Material and Finish:

Terminal Body and Sleeve — Copper per ASTM B-152
Plating — Tin per MIL-T-10727

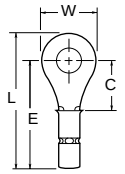

Wire Size Circular Mils [mm²]	Stud Size	Dimensions L Max.	E Max.	C Min.	W	Material Thickness Max.	Wire Insulation Dia. Max.	Part Numbers Loose Piece	Tape Mounted
26–22 202–810 [0.1–0.41]	2 M2	**.464** 11.79	**.391** 9.93	**.121** 3.07	**.140** 3.56	**.020** 0.51	**.082** 2.08	31518	2-31518-1
	4	**.585** 14.86	**.481** 12.22	**.211** 5.36	**.203** 5.16	**.020** 0.51	**.082** 2.08	31679	—
22-16 509–3,260 [0.26–1.65]	4	**.603** 15.32	**.491** 12.47	**.156** 3.96	**.218** 5.54	**.033** 0.84	**.125** 3.18	31094	—
	6 M3.5	**.603** 15.32	**.491** 12.47	**.156** 3.96	**.218** 5.54	**.033** 0.84	**.125** 3.18	31096	—
		.728 18.49	**.585** 14.86	**.250** 6.35	**.281** 7.14	**.033** 0.84	**.125** 3.18	31269	—
	8 M4	**.775** 19.69	**.616** 15.65	**.281** 7.14	**.312** 7.92	**.033** 0.84	**.125** 3.18	30996	—
	10	**.775** 19.69	**.616** 15.65	**.281** 7.14	**.312** 7.92	**.033** 0.84	**.125** 3.18	30997	—
		.728 18.49	**.585** 14.86	**.250** 6.35	**.281** 7.14	**.033** 0.84	**.140** 3.56	31398	—
16–14 2,050–5,180 [1.04–2.62]	8 M4	**.790** 20.07	**.616** 15.65	**.281** 7.14	**.343** 8.71	**.033** 0.84	**.170** 4.32	30927	—
	10	**.790** 20.07	**.616** 15.65	**.281** 7.14	**.343** 8.71	**.033** 0.84	**.170** 4.32	30928	—
		.790 20.07	**.616** 15.65	**.281** 7.14	**.343** 8.71	**.033** 0.84	**.150** 3.81	30993	—
12–10 5,180–13,100 [2.62–6.64]	8 M4	**.955** 24.26	**.796** 20.22	**.281** 7.14	**.312** 7.92	**.042** 1.07	**.230** 5.84	324523	—
	10	**1.007** 25.58	**.817** 20.75	**.302** 7.67	**.375** 9.53	**.042** 1.07	**.230** 5.84	31771	—

Note: "C" dimension applies from edge of metal wire barrel to center of stud hole.

Wire Size Range
AWG 26 to 6

Product Type	AMP Wire Size	Hand Tools	Pneumatic Tooling		Dies for 6-26, Tool 189721-1 Requires Straight Action Adapter 217200-1 or 318161-1 Dies Also Fit 69710-1 Hand Tool	Tooling For Tape Mounted Products
			Crimping Heads for 6-26, Tool 189721-1			Dies for 69875 AMP-TAPETRONIC AMP-O-LECTRIC[6] Requires Applicator AMPOMATOR CLS IV Requires Applicators
			Single Wire Range	Multiple Wire Range		
All SOLISTRAND terminals and splices except for Flag Tongue terminals	26-22	69363[2]	—	—	—	768625-1
	24-20					—
	22-16	49935[2] 58546-1[3]	314516-1	—	47812, 314925-1[5]	68240-1
	16-14		314517-1	679301-1	47813, 314926-1[5]	68241-1
	12-10 & 16-14 HD		—	—	47814[1]	68242-1
	14-12	49592[2]	314518-1	—	—	90566-1
	8	—	679302-1	—	—	68243-1
	6	—	679303-1	—	—	—
Flag Tongue terminals only	16-14	49975[2]	217204-1	—	—	Flag terminals not available in tape mounted form
	12-10	49965[2]	217203-1			
DIAMOND GRIP terminals and splices	26-22	48070	—	—	—	69902
	24-20	47784	—	—	—	—
	22-16	49512	—	—	—	69903
	16-14	49513	—	—	46251-2	69904
	12-10 & 16-14 HD	59054	—	—	—	69905

[1] For standard wire only.
[2] CERTI-CRIMP Hand Tool.
[3] Contains die set 58545-1. PRO-CRIMPER II commercial tool not approved for UL applications.
[4] Contains die set 58509-1. PRO-CRIMPER II commercial tool not approved for UL applications.
[5] With locator, for terminals only.

Application Tooling for SOLISTRAND Terminals and Splices

Wire Size Range
AWG 8 to 600 MCM

Product Type	AMP Wire Size	Pneumatic Tooling: Hand Tool	Pneumatic Tooling: 69015	Hydraulic Tools With Self Contained Dies: Hand Tool	Hydraulic Tools With Self Contained Dies: Latch Head	Hydraulic and Battery Powered Tools With Interchangeable Dies: 314999-1 Battery Tool[3], 59973-1 Hand Tool, 69065[2] & 69067[2] Latch Heads: Nest	Hydraulic and Battery Powered Tools With Interchangeable Dies: 314999-1 Battery Tool[3], 59973-1 Hand Tool, 69065[2] & 69067[2] Latch Heads: Indent	Hydraulic and Battery Powered Tools With Interchangeable Dies: 69097[2] "C" Head: Nest	Hydraulic and Battery Powered Tools With Interchangeable Dies: 69097[2] "C" Head: Indent	Hydraulic and Battery Powered Tools With Interchangeable Dies: 58445-1[2] Latch Head	Hydraulic and Battery Powered Tools With Interchangeable Dies: 69082[2] "C" Head	Hydraulic and Battery Powered Tools With Interchangeable Dies: 69099[2] "C" Head	Tooling For Tape Mounted Product: Dies for 69875 AMP-TAPETRONIC (Listed dies are single indent. See product information for proper tape application tooling selection)	Tooling For Tape Mounted Product: Dies for 68250-1 HD AMP-TAPETRONIC (Listed dies are single indent. See product information for proper tape application tooling selection)
Standard Terminals and Splices	8	69355[1]	49956			48126	48355	46146	46145			69216	68243-1	68312-1
	6	59083 No CERTI-CRIMP	48172	59975-1	69069[2]	48128		46134				69217	—	68313 -1
							48127		46133					
	4	59131	48173			48129		46135		—		69218	—	—
	2		48174			48130		46136				45433	—	—
	1/0		48183			48132		46138	46137			45436	—	—
	2/0					48133	48131					45439	—	—
	3/0					48134						45442	—	—
	4/0					300430						45445	—	—
	250-300 MCM	—	—							48816	69911			
	300-350 MCM				—					48817	69912	—	—	—
	400 MCM									48818	69913			
	500-600 MCM									48819	69914			
Heavy Duty Terminals	8 HD					48128-1								
	6 HD					48129-1	48127-1							
	4 HD			—		48130-1				—			—	—
	2 HD					48132-1	48131-1							
	1/0 HD					48133-1								
Tooling for Flag Terminals only	8	69354-1	48412			Only the 69067 head can be used for Flag terminals								
						48506	48505							
	6		48413			48508								
	4		N/A		—	48509	48507			—			—	—
	2		48415			48510								
	1/0	—[1]	N/A			48652								
	2/0					48805	48511							
	3/0		—[1]			48806								
	4/0					48807								

[1] CERTI-CRIMP Hand Tool.
[2] These crimping heads are recommended for use only with AMP Hydraulic Hand Pump 314979-1, DYNA-CRIMP Hydraulic Power Units 69120-1 (115 VAC) and 69120-2 (230 VAC), and with DYNA-CRIMP II Battery Operated Hydraulic Power Unit 122271-1.
[3] Battery operated hand tool includes crimping head P/N 318774-1 to crimp #8-4/0 SOLISTRAND Terminals and Splices, (2) 12 volt batteries, battery charger, and carrying case with tool strap.

For complete product information, order Catalog 65505

Product Facts

- **Product available in temperature ranges of 500°F [260°C], 550°F [288°C], 650°F [343°C] and 1200°F [649°C]**
- **Product employs the famous "W" and "C" crimp**
- **Wide range of wire sizes**
- **Complete line of related application tooling**
- **Accommodates solid and/or stranded conductors**



Photo #103097

Heat…extreme heat… searing temperatures up to 1200°F [649°C]. This is one of the most challenging environments that electrical/electronic circuitry has ever entered.

If heat is an unavoidable dimension in your circuit design and production, this product is an important ally. In this AMP line of STRATO-THERM terminals and splices, you'll find high temperature circuit hardware. You'll also find solutions to other more familiar circuit problems such as vibration, corrosion and flash-over, when they occur at high temperatures.

Different types of high temperature terminals and splices found in this catalog are as follows:

PIDG Terminals and Splices, and Pre-Insulated Spare Wire Caps — 550°F [288°C] Range

PIDG Insulation Restriction Terminals — 550°F [288°C] Range

Post-Insulated Terminals and Splices — 550°F [288°C] Range

Uninsulated Terminals and Splices — 650°F [343°C] Range

Uninsulated Terminals and Splices — 1200°F [649°C] Range

For complete product information, order Catalog 82011

Products for Industrial & Commercial Applications

Dimensions are shown for reference purposes only.

Dimensions are in inches and millimeters unless otherwise specified. Values in brackets are metric equivalents.

Specifications subject to change.

Technical Support Center
1-800-522-6752
www.tycoelectronics.com

Introduction

PIDG Terminals and Splices, and Pre-Insulated Spare Wire Caps 550°F [288°C] Range



Designed for reliable performance up to 550°F [288°C], this line of ring-tongue terminals, butt splices and spare wire caps features a pre-insulation sleeve of TEFLON TFE insulation material. A special funnel entry feature has been added to assure easy entry and proper seating of wire. The body is copper with a choice of gold over nickel plating or nickel plating. The terminal and splice barrel accommodates stranded wire conductors only. The spare wire caps are designed for unstripped wire.

PIDG Insulation Restriction Terminals



550°F [288°C] Range

These pre-insulated insulation restriction terminals prevent the insulation of thin-wall insulation wire from entering the terminal's wire crimp area during the crimping process.

Designed for reliable performance up to 550°F [288°C], these terminals feature a pre-insulation sleeve of TEFLON (TFE) insulation material.

Because of features such as a one-piece constructed inner sleeve and a wide funnel entry design which facilitates wire entry, standard STRATO-THERM PIDG tooling may be used to terminate this product.

Post-Insulated Terminals and Splices 550°F [288°C] Range



The temperature range of these terminals and splices is 550°F [288°C] for nickel plating and gold over nickel plated copper, and 500°F [260°C] for silver plating, These terminals and splices accommodate solid and/or stranded conductors.

Uninsulated Terminals and Splices



650°F [343°C] Range

These terminals and splices are available with and without wire insulation support. Both types are manufactured from electrolytic copper, plated with nickel. In the insulation support type, the support sleeve is fabricated from nickel-silver alloy. Both types accommodate solid or stranded conductors in various combinations. Wire size range is listed in the tabular data section.

Uninsulated Terminals and Splices 1200°F [649°C] Range



Nickel material is used for the body of both the terminal and splice. They are available with or without wire insulation support sleeve of nickel-silver alloy material. Accommodating either solid or stranded conductors in different combinations, these terminals and splices are made to cover a broad wire size range, listed in the tabular data section.

Terminals made of alumel and chromel material with nickel-silver alloy sleeves are available for thermo-couple applications. When using either alumel or chromel conductors, a terminal of the same material should be selected.

For complete product information, order Catalog 82011

Products for Industrial & Commercial Applications

Dimensions are shown for reference purposes only.

Dimensions are in inches and millimeters unless otherwise specified. Values in brackets are metric equivalents.

Specifications subject to change.

Technical Support Center
1-800-522-6752
www.tycoelectronics.com

Introduction

Ordering Information

All terminals and splices are listed according to wire size and type of terminal or splice. If the part number of the terminal or splice is known, refer to the Numerical Index, at the back of this catalog, for page location of tabular data.

In the Tabular Data Section, part numbers are available in either loose piece or tape mounted form.

When ordering tape mounted part numbers, specify the terminal or splice part number, the total quantity of parts desired (if applicable). The chart to the right lists by wire size the type of packaging available and the quantity per package.

Wire Range	Standard Quantities	
AWG	Loose Piece	Tape Mounted
26 – 14	1,000	5,000
26 – 22	—	2,500
12 – 10	500	2,500
8, 6, 4	100	—
2, 1/0	50	—

Note: Package quantities may vary with specific part numbers.

The Crimp

All five types of STRATO-THERM terminals and splices provide optimum corrosion and vibration resistance plus outstanding tensile characteristics.

All types, except the STRATO-THERM PIDG terminals, splices and pre-insulated spare wire caps, employ the famous “W” crimp which creates the precise electromechanical properties necessary for solid and/or stranded conductor combinations. A proper crimp will provide a uniform and permanent attachment. When mechanical pressure is applied to the terminal barrel, the wire inside is forced into the serrations or dimples of the barrel. Shown are four typical photomacrographs of the “W” crimp, illustrating the results of crimping various conductor combinations. In each case, the action of the crimp has compressed the conductors and the barrel into a homogenous mass.

“W” Crimp



One Solid



One Solid
Two Stranded



Two Solid



STRATO-THERM PIDG terminals and splices employ the equally reliable confined “C” crimp plus multiple position insulation support crimp for today’s smaller insulated wires. This “C” crimp is especially suited to crimping the terminal barrel and insulation sleeve to stranded wire conductors. The photomacrograph shows the results of “C” crimping. Virtually the same electromechanical properties are obtained as in the “W” crimp. Pre-insulated spare wire caps and post-insulated splices are crimped with an “O” crimp configuration.

Confined C



For complete product information, order Catalog 82011

Products for Industrial & Commercial Applications

Dimensions are shown for reference purposes only.

Dimensions are in inches and millimeters unless otherwise specified. Values in brackets are metric equivalents.

Specifications subject to change.

Technical Support Center
1-800-522-6752
www.tycoelectronics.com

Insulated Terminals and Splices

PIDG (Pre-Insulated DIAMOND GRIP) Ring Tongue Terminals

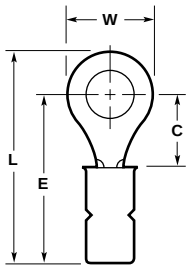

Temperature Rating, Material and Finish:

Insulation — TEFLON

Terminal Body — Copper per ASTM B152

Plating — Nickel per QQ-N-290, 550°F [288°C]. Gold per MIL-G-45204 over Nickel per QQ-N-290 500°F [260°C]

Metallic Sleeve — Copper per ASTM B152

Plating — Nickel per QQ-N-290, 550°F [288°C]

Related Product Data:

Application Tooling — page 7030

Wire Size Circular Mils [mm²]	Tongue Material Thickness Max.	Stud Size	Dimensions W	Dimensions C Min.	Dimensions E Max.	Dimensions L Max.	Terminal Insulation Color	Wire Insulation Diameter Max.	Body Plating[1]	Part Numbers Loose Piece
18-16 1,600-2,800 [0.81-1.42]	**.033** 0.84	4	**.218** 5.54	**.156** 3.96	**.560** 14.22	**.672** 17.07	Orange	**.135** 3.43	Nickel	50834
		8 M4	**.312** 7.92	**.281** 7.14	**.685** 17.40	**.844** 21.44	Orange	**.135** 3.43	Nickel	50836
		10	**.312** 7.92	**.281** 7.14	**.685** 17.40	**.844** 21.44	Orange	**.135** 3.43	Nickel	50836-1
12-10 5,180-13,100 [2.62-6.64]	**.042** 1.07	8 M4	**.375** 9.53	**.302** 7.67	**.893** 22.68	**1.083** 27.51	Black	**.214** 5.44	Nickel	50845-1
		10	**.375** 9.53	**.302** 7.67	**.893** 22.68	**1.083** 27.51	Black	**.214** 5.44	Nickel	50845-2
		1/4 M6	**.531** 13.49	**.437** 11.10	**1.012** 25.70	**1.280** 32.51	Black	**.214** 5.44	Nickel	50846

[1] Nickel plated parts are to be used with nickel plated wire. Gold plated parts are to be used with silver plated wire.
Note: "C" dimension applies from edge of metal wire barrel to center of stud hole.

Pre-Insulated Spare Wire Caps (For Unstripped Wire)





Tool Part Number
69272-1

Temperature Rating, Material and Finish:

Insulation — TEFLON

Ring — Copper per ASTM B152

Plating — Nickel per QQ-N-290, 550°F [288°C]

Related Product Data:

Application Tooling — shown to the right

Wire Insulation Diameter Range	Dimension L Max.	Ring Color	Tool Color Guide	Part Number
.075 – .087 1.91 – 2.21	**.500** 12.70	Black and Orange	Orange	328859

For complete product information, order Catalog 82011

Products for Industrial & Commercial Applications

Dimensions are shown for reference purposes only.

Dimensions are in inches and millimeters unless otherwise specified. Values in brackets are metric equivalents.

Specifications subject to change.

Technical Support Center
1-800-522-6752
www.tycoelectronics.com

Uninsulated Terminals and Splices

SOLISTRAND Heat Resistant Ring Tongue Terminals

Temperature Rating, Material and Finish:

Terminal Body — Copper per ASTM B152

Plating — Nickel per QQ-N-290, 650°F [343°C]

Related Product Data:

Application Tooling — page 7031

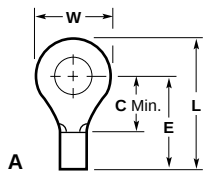

Non-Insulation Support

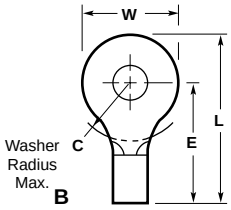

Non-Insulation Support (Wire Range 2 & 1/0)

Wire Size Circular Mils [mm²]	Tongue Material Thickness Max.	Stud Size	Style	Dimensions W	Dimensions C	Dimensions E Max.	Dimensions L Max.	Part Numbers Loose Piece
22-16 509-3,260 [0.26-1.65]	**.033** 0.84	6 M3.5	A	**.218** 5.54	**.156** 3.96	**.337** 8.56	**.449** 11.40	322797
			A	**.281** 7.14	**.250** 6.35	**.436** 11.07	**.574** 14.58	323219
		8 M4	A	**.281** 7.14	**.250** 6.35	**.436** 11.07	**.574** 14.58	322798
		10	A	**.281** 7.14	**.250** 6.35	**.436** 11.07	**.574** 14.58	322799
16-14 2,050-5,180 [1.04-2.62]	**.033** 0.84	10	A	**.343** 8.71	**.281** 7.14	**.462** 11.73	**.636** 16.15	322695*
		1/4 M6	A	**.469** 11.91	**.437** 11.10	**.618** 15.70	**.855** 21.72	322733
12-10 5,180-13,100 [2.62-6.64]	**.042** 1.07	10	A	**.375** 9.53	**.302** 7.67	**.575** 14.61	**.765** 19.43	323062
		5/16 M8	A	**.531** 13.49	**.468** 11.89	**.736** 18.69	**1.004** 25.50	323064
8 13,100-20,800 [6.64-10.5]	**.051** 1.30	10	A	**.406** 10.31	**.359** 9.12	**.743** 18.87	**.949** 24.10	323165
		1/4 M6	A	**.469** 11.91	**.359** 9.12	**.696** 17.68	**.933** 23.70	323166
		5/16 M8	A	**.562** 14.27	**.406** 10.31	**.790** 20.07	**1.074** 27.28	323167
6 20,800-33,100 [10.5-16.8]	**.060** 1.52	10	A	**.468** 11.89	**.531** 13.49	**.931** 23.65	**1.168** 29.67	323169
		3/8	A	**.625** 15.88	**.531** 13.49	**.931** 23.65	**1.246** 31.65	323172
4 33,100-52,600 [16.8-26.7]	**.073** 1.85	1/4 M6	A	**.500** 12.70	**.437** 11.10	**.946** 24.03	**1.199** 30.45	323173
2 52,600-83,700 [26.7-42.4]	**.073** 1.85	3/8	B	**.625** 15.88	**.540** 13.72	**1.212** 30.78	**1.527** 38.79	323177

*Available in small packaging quantities.

Uninsulated Terminals and Splices

SOLISTRAND Heat Resistant Splices

Temperature Rating, Material and Finish:

Splice Body — Copper per ASTM B152

Plating — Nickel per QQ-N-290, 650°F [343°C]

Related Product Data:

Application Tooling — page 7031

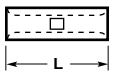

Style-A Non-Insulation Support Butt Splice

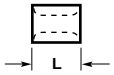

Style-B Non-Insulation Support Parallel Splice

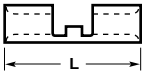

Style-C Non-Insulation Support Butt Splice

Wire Size Circular Mils [mm²]	Material Thickness Max.	Style	Dimensions L Max.	Dimensions ID Min.	Dimensions OD Max.	Part Numbers Loose Piece
22-16 509-3,260 [0.26-1.65]	**.033** 0.84	A	**.578** 14.68	**.061** 1.55	**.141** 3.58	323796
		B	**.301** 7.65	**.061** 1.55	**.141** 3.58	323030
		C	**.591** 15.01	**.061** 1.55	**.141** 3.58	322822
16-14 2,050-5,180 [1.04-2.62]	**.033** 0.84	A	**.567** 14.40	**.085** 2.16	**.165** 4.19	323795
		B	**.301** 7.65	**.085** 2.16	**.165** 4.19	323794
12-10 5,180-13,100 [2.62-6.64]	**.042** 1.07	A	**.565** 14.35	**.129** 3.28	**.226** 5.74	323755
		B	**.333** 8.46	**.129** 3.28	**.226** 5.74	323754
8 13,100-20,800 [6.64-10.5]	**.051** 1.30	B	**.375** 9.53	**.172** 4.37	**.296** 7.52	2-34318-1

SOLISTRAND High Temperature Ring Tongue Terminals

Temperature Rating and Material:

Terminal Body — Nickel per ASTM B162, 1200°F [649°C]

Related Product Data:

Application Tooling — page 7031

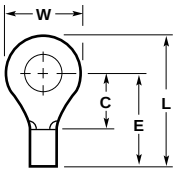

Non-Insulation Support

Wire Size Circular Mils [mm²]	Tongue Material Thickness Max.	Color Code	Stud Size	Dimensions W	Dimensions C Min.	Dimensions E Max.	Dimensions L Max.	Part Numbers Loose Piece
22-16 509-3,260 [0.26-1.65]	**.033** 0.84	Orange	4	**.218** 5.54	**.156** 3.96	**.337** 8.56	**.449** 11.40	321884
			5 M3	**.218** 5.54	**.156** 3.96	**.337** 8.56	**.449** 11.40	321885
			6 M3.5	**.281** 7.14	**.250** 6.35	**.431** 10.95	**.574** 14.58	321889*
			8 M4	**.281** 7.14	**.250** 6.35	**.431** 10.95	**.574** 14.58	321890*
			10	**.281** 7.14	**.250** 6.35	**.431** 10.95	**.574** 14.58	321891*
16-14 2,050-5,180 [1.04-2.62]	**.033** 0.84	Orange	6 M3.5	**.250** 6.35	**.171** 4.34	**.352** 8.94	**.480** 12.19	322329
			8 M4	**.343** 8.71	**.281** 7.14	**.462** 11.73	**.636** 16.15	322334*
			10	**.343** 8.71	**.281** 7.14	**.462** 11.73	**.636** 16.15	322335*
			1/4 M6	**.468** 11.89	**.437** 11.10	**.618** 15.70	**.855** 21.72	322339

*Available in small packaging quantities.

For complete product information, order Catalog 82011

Products for Industrial & Commercial Applications

Dimensions are shown for reference purposes only.

Dimensions are in inches and millimeters unless otherwise specified. Values in brackets are metric equivalents.

Specifications subject to change.

Technical Support Center
1-800-522-6752
www.tycoelectronics.com

Uninsulated Terminals and Splices

SOLISTRAND High Temperature Ring Tongue Terminals

Temperature Rating and Material:

Terminal Body — Nickel per ASTM B162, 1200°F [649°C]

Related Product Data:

Application Tooling — page 7031

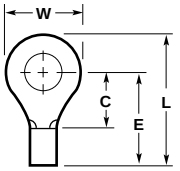

Non-Insulation Support

Wire Size Circular Mils [mm²]	Tongue Material Thickness Max.	Color Code	Stud Size	Dimensions W	Dimensions C Min.	Dimensions E Max.	Dimensions L Max.	Part Numbers Loose Piece
12-10 5,180-13,100 [2.62-6.64]	.042 1.07	Orange	8 M4	.375 9.53	.281 7.14	.549 13.94	.739 18.77	323745*
			10	.375 9.53	.281 7.14	.549 13.94	.739 18.77	323680*
			1/4 M6	.531 13.49	.468 11.89	.736 18.69	1.004 25.50	323683*
8 13,100-20,800 [6.64-10.5]	.051 1.30	Orange	10	.406 10.31	.359 9.12	.743 18.87	.949 24.10	328822

*Available in small packaging quantities.

SOLISTRAND High Temperature Splices

Temperature Rating and Material:

Splice Body — Nickel per ASTM B162, 1200°F [649°C]

Related Product Data:

Application Tooling — page 7031

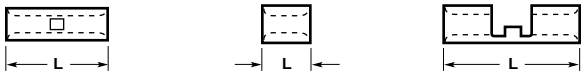

Style-A Non-Insulation Support Butt Splice

Style-B Non-Insulation Support Parallel Splice

Style-C Non-Insulation Support Butt Splice

Wire Size Circular Mils [mm²]	Material Thickness Max.	Color Code	Style	Dimensions L Max.	Dimensions ID Min.	Dimensions OD Max.	Part Numbers Loose Piece
22-16 509-3,260 [0.26-1.65]	.033 0.84	Orange	A	.578 14.68	.061 1.55	.141 3.58	322324*
			B	.301 7.65	.061 1.55	.141 3.58	322326
16-14 2,050-5,180 [1.04-2.62]	.033 0.84	Orange	A	.567 14.40	.085 2.16	.165 4.19	322345
			B	.301 7.65	.085 2.16	.165 4.19	322347
			C	.529 13.44	.085 2.16	.165 4.19	323878
12-10 5,180-13,100 [2.62-6.64]	.042 1.07	Orange	A	.567 14.40	.129 3.28	.226 5.74	323696*
			B	.333 8.46	.129 3.28	.226 5.74	323672
			C	.703 17.86	.129 3.28	.226 5.74	323698

*Available in small packaging quantities.

Uninsulated Terminals and Splices

DIAMOND GRIP Heat Resistant Ring Tongue Terminals

Temperature Rating, Material and Finish:

Terminal Body — Copper per ASTM B152

Plating — Nickel per QQ-N-290, 650°F [343°C]

Metallic Sleeve — Nickel Silver per ASTM B122

Related Product Data:

Application Tooling — page 7031

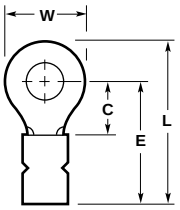

Insulation Support

Wire Size Circular Mils [mm²]	Tongue Material Thickness Max.	Stud Size	Dimensions W	C Min.	E Max.	L Max.	Wire Insulation Diameter Max.	Part Numbers Loose Piece	Part Numbers Tape Mounted
22-16 509-3,260 [0.26-1.65]	**.033** 0.84	4	**.218** 5.54	**.156** 3.96	**.512** 13.00	**.624** 15.85	**.140** 3.56	322363	—
		6 M3.5	**.218** 5.54	**.156** 3.96	**.530** 13.46	**.645** 16.38	**.110** 2.79	323151	—
			.281 7.14	**.250** 6.35	**.611** 15.52	**.749** 19.02	**.140** 3.56	323199	—
		8 M4	**.281** 7.14	**.250** 6.35	**.611** 15.52	**.749** 19.02	**.140** 3.56	322365	—
			.281 7.14	**.250** 6.35	**.629** 15.98	**.770** 19.56	**.110** 2.79	323152	—
		10	**.281** 7.14	**.250** 6.35	**.611** 15.52	**.749** 19.02	**.140** 3.56	322366	—
			.281 7.14	**.250** 6.35	**.629** 15.98	**.770** 19.56	**.110** 2.79	323153	—
16-14 2,050-5,180 [1.04-2.62]	**.033** 0.84	10	**.343** 8.71	**.281** 7.14	**.637** 16.18	**.811** 20.60	**.170** 4.32	322375	—
			.343 8.71	**.281** 7.14	**.659** 16.74	**.836** 21.23	**.130** 3.30	323161	—
12-10 5,180-13,100 [2.62-6.64]	**.042** 1.07	6 M3.5	**.375** 9.53	**.302** 7.67	**.841** 21.36	**1.034** 26.26	**.230** 5.84	323066	—
		10	**.375** 9.53	**.302** 7.67	**.841** 21.36	**1.034** 26.26	**.230** 5.84	323068	323068-1
		1/4 M6	**.531** 13.49	**.468** 11.89	**1.002** 25.45	**1.273** 32.33	**.230** 5.84	323069	—

Note: "C" dimension applies from edge of metal wire barrel to center of stud hole.

DIAMOND GRIP High Temperature Ring Tongue Terminals

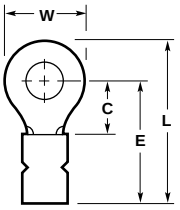

Insulation Support

Temperature Rating and Material:

Terminal Body — See table, 1200°F [649°C], Nickel per ASTM B162, Alumel —, Chromel —

Metallic Sleeve — Nickel Silver per ASTM B122

Related Product Data:

Application Tooling — page 7031

Wire Size Circular Mils [mm²]	Tongue Material Thickness Max.	Stud Size	Dimensions W	C Min.	E Max.	L Max.	Body Material	Sleeve Color Code	Wire Insulation Diameter Max.	Part Numbers Loose Piece
22-16 509-3,260 [0.26-1.65]	**.033** 0.84	6 M3.5	**.281** 7.14	**.250** 6.35	**.611** 15.52	**.749** 19.02	Nickel	Orange	**.140** 3.56	321892
		8 M4	**.281** 7.14	**.250** 6.35	**.611** 15.52	**.749** 19.02	Nickel	Orange	**.140** 3.56	321893
			.312 7.92	**.281** 7.14	**.637** 16.18	**.796** 20.22	Nickel	Orange	**.140** 3.56	321897
			.312 7.92	**.281** 7.14	**.637** 16.18	**.796** 20.22	Chromel	Gray	**.140** 3.56	1-321897-0
		10	**.281** 7.14	**.250** 6.35	**.611** 15.52	**.749** 19.02	Nickel	Orange	**.140** 3.56	321894
			.312 7.92	**.281** 7.14	**.637** 16.18	**.796** 20.22	Nickel	Orange	**.140** 3.56	321898
			.312 7.92	**.281** 7.14	**.637** 16.18	**.796** 20.22	Alumel	Green	**.140** 3.56	1-321898-0
		1/4 M6	**.468** 11.89	**.437** 11.10	**.793** 20.14	**1.031** 26.19	Nickel	Orange	**.140** 3.56	322320

Note: "C" dimension applies from edge of metal wire barrel to center of stud hole.

For complete product information, order Catalog 82011

Products for Industrial & Commercial Applications

Dimensions are shown for reference purposes only.

Dimensions are in inches and millimeters unless otherwise specified. Values in brackets are metric equivalents.

Specifications subject to change.

Technical Support Center
1-800-522-6752
www.tycoelectronics.com

Uninsulated Terminals and Splices

DIAMOND GRIP High Temperature Ring Tongue Terminals

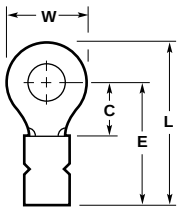

Insulation Support

Temperature Rating and Material:

Terminal Body — See table, 1200°F [649°C], Nickel per ASTM B162, Alumel —, Chromel —

Metallic Sleeve — Nickel Silver per ASTM B122

Related Product Data:

Application Tooling — page 7031

Wire Size Circular Mils [mm²]	Tongue Material Thickness Max.	Stud Size	Dimensions W	C Min.	E Max.	L Max.	Body Material	Sleeve Color Code	Wire Insulation Diameter Max	Part Numbers Loose Piece
16-14 2,050-5,180 [1.04-2.62]	**.033** 0.84	8 M4	**.343** 8.71	**.281** 7.14	**.637** 16.18	**.811** 20.60	Nickel	Orange	**.170** 4.32	322337
		10	**.343** 8.71	**.281** 7.14	**.637** 16.18	**.811** 20.60	Nickel	Orange	**.170** 4.32	322338
12-10 5,180-13,100 [2.62-6.64]	**.042** 1.07	8 M4	**.375** 9.53	**.281** 7.14	**.815** 20.70	**1.008** 25.60	Nickel	Orange	**.230** 5.84	323749
			.375 9.53	**.281** 7.14	**.815** 20.70	**1.008** 25.60	Chromel	Gray	**.230** 5.84	2-323749-1
		10	**.375** 9.53	**.281** 7.14	**.815** 20.70	**1.008** 25.60	Nickel	Orange	**.230** 5.84	323750
			.375 9.53	**.281** 7.14	**.815** 20.70	**1.008** 25.60	Alumel	Green	**.230** 5.84	2-323750-1
		1/4 M6	**.531** 13.49	**.468** 11.89	**1.002** 25.45	**1.273** 32.33	Nickel	Orange	**.230** 5.84	323751

Note: "C" dimension applies from edge of metal wire barrel to center of stud hole.

Application Tooling Information for STRATO-THERM Insulated Heat Resistant and High Temperature Terminals and Splices

Wire Size Range AWG 26-10

Product Type	AMP Wire Size	Hand Tools	Pneumatic Tooling: Dies for 626 Pneumatic Tools 189721-[ ] and 189722-[ ] require Straight Action Adapter[1] 217200-1 or "C" Head Adapter 318161-1 Dies also fit 69710-1 Hand Tool	Tooling For Tape Mounted Products: Dies for 69875 AMP-TAPETRONIC AMP-O-LECTRIC[2] Requires Applicator AMPOMATOR CLS IV[2] Requires Applicators
Pre-Insulated Terminals	26-24	69692-1	69731	—
	22-20		69732	69936
	18-16	69693-1	69733	69937
	14		69734	—
	12-10	—	69735	—
Pre-Insulated Splices	22-20	—	69327	—
	18-16	—	69328	—
	14-12	—	69329	—

[1] Straight Action Adapter 217200-1 is used with Tools 189721-1 or 189722-1. "C" Head Adapter 318161-1 is used with Tools 189721-2 or 189722-2. Both adapters require the use of non-ratchet tool holder 189928-1 or ratchet tool holder 356304-1.
[2] Call Technical Support Center for Machine and Applicator part numbers.

Wire Size Range AWG 26-6

Product Type	AMP Wire Size	Hand Tools	Hydraulic and Battery Powered Tools With Interchangeable Dies: 69097[2] "C" Head Nest	69097[2] "C" Head Indent	69099[2] "C" Head
Post Insulated Terminals and Splices	26-24	45730	—	—	—
	22-20	46467, 46468[1]	—	—	—
	18-16	46468	—	—	—
	8	—	46146	46145	69216
	6	—	46134	46133	69217

[1] Part Number 55235-1 only
[2] These crimping heads are recommended for use only with AMP Hydraulic Hand Pump 314979-1, DYNA-CRIMP Hydraulic Power Units 69120-1 (115 VAC) and 69120-2 (230 VAC), and with DYNA-CRIMP II Battery Operated Hydraulic Power Unit 122271-1.

For complete product information, order Catalog 82011

Products for Industrial & Commercial Applications
Dimensions are shown for reference purposes only.
Dimensions are in inches and millimeters unless otherwise specified. Values in brackets are metric equivalents.
Specifications subject to change.
Technical Support Center
1-800-522-6752
www.tycoelectronics.com

Application Tooling Information for STRATO-THERM Uninsulated Heat Resistant and High Temperature Terminals and Splices

Wire Size Range AWG 22-10

Product Type	AMP Wire Size	Hand Tools	Pneumatic Tooling	Tooling For Tape Mounted Products
			Crimping Heads for 626 Pneumatic Tool 189721-1 and 189722-1[1]	Dies for 69875 AMP-TAPETRONIC AMP-O-LECTRIC[2] Requires Applicator AMPOMATOR CLS IV[2] Requires Applicators
Uninsulated Terminals and Splices with Insulation Support	22-16	46673 46673-1	356744-1	69930
	16-14	46988 59294	356744-2	69931
	12-10	59461	904870-1	69932
Uninsulated Terminals and Splices with Non-Insulation Support	22-16	46447	217206-1	69954
	16-14			69955
	12-10			69956

[1] Crimping Heads require the use of non-ratchet tool holder 189767-1 or ratchet tool holder 356302-1.
[2] Call Technical Support Center for Machine and Applicator part numbers.

Wire Size Range AWG 8-1/0

Product Type	AMP Wire Size	Hand Tools	Pneumatic Tooling	Hydraulic Tools With Self Contained Dies		59973-1 Hand Tool, 69065[2] & 69067[2] Latch Heads		Hydraulic and Battery Powered Tools with Interchangeable Dies		
			69015 Head	Hand Tool	Latch Head	Nest	Indent	69097[2] "C" Head Nest	69097[2] "C" Head Indent	69099[2] "C" Head
Uninsulated Terminals and Splices with Non-Insulation Support	8	69355[1]	49956	59975-1	69069[2]	48126	48355	—	—	69216
	6	59083 No CERTI-CRIMP	48172			48128	48127	—	—	69217
	4	—	48173			48129		46135	46133	69218
	2	—	48174			48130		46136		45433
	1/0	—	48183	—	—	48132	48131	46138	46137	45436

[1] CERTI-CRIMP Hand Tool.
[2] These crimping heads are recommended for use only with AMP Hydraulic Hand Pump 314979-1, DYNA-CRIMP Hydraulic Power Units 69120-1 (115 VAC) and 69120-2 (230 VAC), and with DYNA-CRIMP II Battery Operated Hydraulic Power Unit 122271-1.

Product Facts

- **Designed for large cables and leads**
- **Ideally suited for power generation and distribution**
- **Accepts a wide range of stranded copper wires (6 AWG to 1000 MCM [13-507 mm²]—for terminals and up to 1500 MCM [760 mm²] for splices)**
- **Available in a variety of terminal and splice styles**
- **High-quality, seamless tubular copper for maximum conductivity**
- **Listed by Underwriters Laboratories, Inc. File No. E12388, Spec. 486**
- **Certified by the Canadian Standards Association File No. LR7189**



The AMPOWER product line is available in a variety of terminal and splice styles to suit your design requirements.

AMPOWER terminals and splices are ideally suited for power generation and distribution. This makes electrical equipment subject to continuous operation, such as generators, motors and welders, a perfect application for AMPOWER products. In addition, other applications include interconnections of power supplies to computers and peripheral equipment.

Technical Documents:

Instruction Sheets

408-1565
408-1602
408-1606
408-2464
408-2953

For complete product information, order Catalog 82025

Products for Industrial & Commercial Applications

Dimensions are shown for reference purposes only.

Dimensions are in inches and millimeters unless otherwise specified. Values in brackets are metric equivalents.

Specifications subject to change.

Technical Support Center
1-800-522-6752
www.tycoelectronics.com

Terminals

Base Material:

Annealed Copper — (ASTM B-188)[2]
Electrodeposited Tin Plate — (MIL-T-10727)

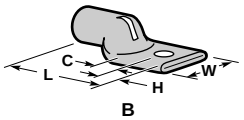

B

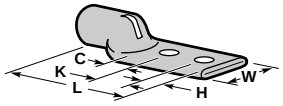

C[1]

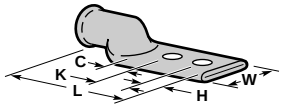

I[1]

Wire Size	Wire Range	Barrel I.D. Min.	Tongue Thickness Max.	Style	Stud Size	Dimensions L Max.	H Max.	C Min.	K	W Max.	Part Numbers
6 AWG[2] 13-15 mm²	20,800-33,100 CM	**.219** 5.56	**.08** 2.03	B	10 —	**1.41** 35.81	**.32** 8.13	**.42** 10.67	—	**.69** 17.53	328141
				B	1/4 M6	**1.41** 35.81	**.32** 8.13	**.42** 10.67	—	**.69** 17.53	328142
				B	5/16 M8	**1.41** 35.81	**.32** 8.13	**.42** 10.67	—	**.69** 17.53	328143
4 AWG[2] 21 mm²	33,100-52,600 CM	**.275** 6.99	**.08** 2.03	B	1/4 M6	**1.41** 35.81	**.32** 8.13	**.42** 10.67	—	**.69** 17.53	328162
				B	5/16 M8	**1.41** 35.81	**.32** 8.13	**.42** 10.67	—	**.69** 17.53	328163
				B	3/8 —	**1.41** 35.81	**.32** 8.13	**.42** 10.67	—	**.69** 17.53	328164
2 AWG 34-35 mm²	52,600-83,700 CM	**.362** 9.19	**.09** 2.29	B	1/4 M6	**1.62** 41.15	**.34** 8.64	**.50** 12.70	—	**.71** 18.03	325201
				B	5/16 M8	**1.62** 41.15	**.34** 8.64	**.50** 12.70	—	**.71** 18.03	325202
				B	3/8 —	**1.62** 41.15	**.34** 8.64	**.50** 12.70	—	**.71** 18.03	325203
				C	3/8 —	**2.63** 66.80	**.34** 8.64	**.50** 12.70	**1.00** 25.40	**.71** 18.03	326799
1/0 AWG 50-60 mm²	83,700-119,500 CM	**.458** 11.63	**.10** 2.54	B	1/4 M6	**1.97** 50.04	**.42** 10.67	**.62** 15.75	—	**.87** 22.10	325301
				B	5/16 M8	**1.97** 50.04	**.42** 10.67	**.62** 15.75	—	**.87** 22.10	325302
				B	3/8 —	**1.97** 50.04	**.42** 10.67	**.62** 15.75	—	**.87** 22.10	325303
				B	1/2 M12	**1.97** 50.04	**.42** 10.67	**.62** 15.75	—	**.87** 22.10	325305
				C	3/8 —	**2.98** 75.69	**.42** 10.67	**.62** 15.75	**1.00** 25.40	**.87** 22.10	326800
2/0 AWG 67-70 mm²	119,500-150,500 CM	**.513** 13.03	**.11** 2.79	B	1/4 M6	**2.11** 53.59	**.47** 11.94	**.62** 15.75	—	**.97** 24.64	325401
				B	5/16 M8	**2.11** 53.59	**.47** 11.94	**.62** 15.75	—	**.97** 24.64	325402
				B	3/8 —	**2.11** 53.59	**.47** 11.94	**.62** 15.75	—	**.97** 24.64	325403
				B	1/2 M12	**2.11** 53.59	**.47** 11.94	**.62** 15.75	—	**.97** 24.64	325405
				C	3/8 —	**3.12** 79.25	**.47** 11.94	**.62** 15.75	**1.00** 25.40	**.97** 24.64	326801
3/0 AWG 80-95 mm²	150,500-190,000 CM	**.576** 14.63	**.12** 3.05	B	5/16 M8	**2.26** 57.40	**.52** 13.21	**.62** 15.75	—	**1.08** 27.43	325502
				B	3/8 —	**2.26** 57.40	**.52** 13.21	**.62** 15.75	—	**1.08** 27.43	325503
				B	1/2 M12	**2.26** 57.40	**.52** 13.21	**.62** 15.75	—	**1.08** 27.43	325505
				C	3/8 —	**3.27** 83.05	**.52** 13.21	**.62** 15.75	**1.00** 25.40	**1.08** 27.43	326802
4/0 AWG 100-125 mm²	190,000-231,000 CM	**.648** 16.46	**.13** 3.30	B	5/16 M8	**2.45** 62.23	**.59** 14.99	**.62** 15.75	—	**1.19** 30.23	325602
				B	3/8 —	**2.45** 62.23	**.59** 14.99	**.62** 15.75	—	**1.19** 30.23	325603
				B	1/2 M12	**2.45** 62.23	**.59** 14.99	**.62** 15.75	—	**1.19** 30.23	325605
				C	3/8 —	**3.46** 87.88	**.59** 14.99	**.62** 15.75	**1.00** 25.40	**1.19** 30.23	326803
				C	1/2 M12	**4.21** 106.93	**.59** 14.99	**.62** 15.75	**1.75** 44.45	**1.19** 30.23	327284
				I	1/2 M12	**4.94** 125.48	**.59** 14.99	**.62** 15.75	**1.75** 44.45	**1.19** 30.23	53683-2

[1] Per NEMA specification.
[2] Terminals for wire sizes 6 AWG and 4 AWG are manufactured from annealed copper ASTM B-152.

Terminals

Base Material:

Annealed Copper — (ASTM B-188)
Electrodeposited Tin Plate — (MIL-T-10727)

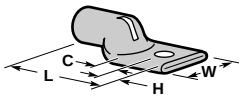

B

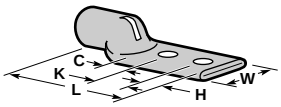

C[1]



E

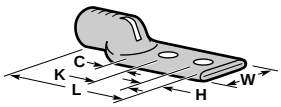

F[1]

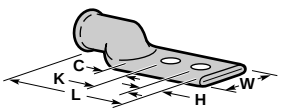

I[1]

Wire Size	Wire Range	Barrel I.D. Min.	Tongue Thickness Max.	Style	Stud Size	Dimensions L Max.	H Max.	C Min.	K	W Max.	Part Numbers
250 MCM 127 mm²	231-275 MCM	**.690** 17.53	**.15** 3.81	B	3/8 —	**2.58** 65.53	**.63** 16.00	**.62** 15.75	—	**1.28** 32.51	325703
				B	1/2 M12	**2.58** 65.53	**.63** 16.00	**.62** 15.75	—	**1.28** 32.51	325705
300 MCM 152 mm²	275-325 MCM	**.758** 19.25	**.16** 4.06	B	3/8 —	**2.69** 68.33	**.63** 16.00	**.62** 15.75	—	**1.40** 35.56	325803
				B	1/2 M12	**2.69** 68.33	**.63** 16.00	**.62** 15.75	—	**1.40** 35.56	325805
				B	5/8 —	**2.82** 71.63	**.63** 16.00	**.75** 19.05	—	**1.40** 35.56	325807
				C	3/8 —	**3.70** 93.98	**.63** 16.00	**.62** 15.75	**1.00** 25.40	**1.40** 35.56	326805
				C	3/8 —	**3.70** 93.98	**.63** 16.00	**.62** 15.75	**1.00** 25.40	**1.40** 35.56	326805-1*
				C	1/2 M12	**4.43** 112.52	**.63** 16.00	**.62** 15.75	**1.75** 44.45	**1.40** 35.56	327286
350 MCM 177mm²	325-375 MCM	**.819** 20.80	**.17** 4.32	B	3/8 —	**2.79** 70.87	**.63** 16.00	**.62** 15.75	—	**1.51** 38.35	325903
				B	1/2 M12	**2.79** 70.87	**.63** 16.00	**.62** 15.75	—	**1.51** 38.35	325905
				C	3/8 —	**3.79** 96.27	**.63** 16.00	**.62** 15.75	**1.00** 25.40	**1.51** 38.35	326806
				C	1/2 M12	**4.55** 115.57	**.63** 16.00	**.62** 15.75	**1.75** 44.45	**1.51** 38.35	327287
				C	1/2	**4.55** 115.57	**.63** 16.00	**.62** 15.75	**1.75** 44.45	**1.51** 38.35	327287-3
400MCM 203mm²	375-450 MCM	**.876** 22.25	**.18** 4.57	B	1/2 M12	**2.89** 73.41	**.63** 16.00	**.62** 15.75	—	**1.61** 40.89	326005
				C	3/8 —	**3.90** 99.06	**.63** 16.00	**.62** 15.75	**1.00** 25.40	**1.61** 40.89	326807
500MCM 253mm²	450-550 MCM	**.981** 24.92	**.20** 5.08	B	3/8 —	**3.29** 83.57	**.76** 19.30	**.75** 19.05	—	**1.80** 45.72	326103
				B	1/2 M12	**3.29** 83.57	**.76** 19.30	**.75** 19.05	—	**1.80** 45.72	326105
				C	1/2 M12	**4.80** 121.92	**.61** 15.49	**.62** 15.75	**1.75** 44.45	**1.80** 45.72	327289
				C	3/8 —	**4.05** 102.87	**.63** 16.00	**.62** 15.75	**1.00** 25.40	**1.80** 45.72	326808
				I	1/2 M12	**5.88** 149.35	**.63** 16.00	**.62** 15.75	**1.75** 44.45	**1.80** 45.72	53642-2
600MCM 304mm²	550-650 MCM	**1.075** 27.31	**.22** 5.59	F	3/8 —	**4.22** 107.19	**.63** 16.00	**.62** 15.75	**1.00** 25.40	**1.95** 49.53	326809-1*[2]
800MCM 405mm²	750-850 MCM	**1.242** 31.55	**.25** 6.35	E	1/2 —	**3.72** 94.49	**.76** 19.30	**.75** 19.05	—	**2.26** 57.40	326405[2]

* No sight hole.
[1] Per NEMA specifications
[2] Two crimps necessary.

Special Terminals

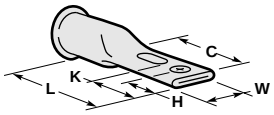

Slotted Stud Hole

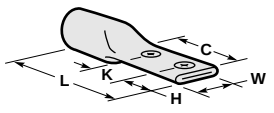

Centerline 2-Hole

Wire Size	Wire Range	Stud Size	Barrel I.D. Min.	Tongue Thickness Max.	Dimensions L Max.	H Max.	C Min.	K	W Max.	Part Numbers
Slotted Stud Hole										
400 MCM	375-450 MCM	3/8 —	**.876** 22.25	**.18** 4.57	**5.82** 147.83	**.44** 11.18	**3.29** 83.57	**1.30** 33.02	**1.61** 40.89	276963-1
500 MCM	450-550 MCM	3/8 —	**.981** 24.92	**.20** 5.08	**6.01** 6.35	**.44** 11.18	**3.25** 82.55	**1.30** 33.02	**1.80** 45.72	276964-1
Centerline 2-Hole										
444.4 MCM	444.4 MCM	3/8 —	**.991** 25.17	**.26** 6.60	**4.01** 101.85	**.45** 11.43	**2.00** 50.80	**1.00** 25.40	**1.26** 32.00	326151-1

For complete product information, order Catalog 82025

Products for Industrial & Commercial Applications
Dimensions are shown for reference purposes only.
Dimensions are in inches and millimeters unless otherwise specified. Values in brackets are metric equivalents.
Specifications subject to change.
Technical Support Center
1-800-522-6752
www.tycoelectronics.com

Butt Splices

Wire Size Range:
2 AWG to 1500 MCM
[34 to 760 mm²]

Base Material:
Annealed Copper — (ASTM B-188)
Electrodeposited Tin Plate — (MIL-T-10727)

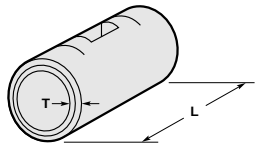

Wire Size	Wire Range	Barrel I.D. Min.	Dimensions T	Dimensions L Max.	Part Numbers
1/0 AWG	83,700-119,500 CM	**.468** 11.89	**.042** 1.07	**1.24** 31.50	324458
3/0 AWG	150,500-190,000 CM	**.586** 14.88	**.053** 1.35	**1.52** 38.61	324460
4/0 AWG	190-231 MCM	**.658** 16.71	**.059** 1.50	**1.65** 41.91	324461
250 MCM	231-275 MCM	**.700** 17.78	**.065** 1.65	**1.79** 45.47	324462
300 MCM	275-325 MCM	**.768** 19.51	**.071** 1.80	**1.93** 49.02	324463
300 MCM	275-325 MCM	**.768** 19.51	**.071** 1.80	**2.18** 55.37	2-324463-5
350 MCM	325-375 MCM	**.829** 21.06	**.077** 1.96	**2.06** 52.32	324464
500 MCM	450-550 MCM	**.991** 25.17	**.092** 2.34	**2.41** 61.21	324466
600 MCM[1]	550-650 MCM	**1.085** 27.56	**.101** 2.57	**2.61** 66.29	324467
700 MCM[1]	650-750 MCM	**1.172** 29.77	**.109** 2.77	**2.79** 70.87	324468
800 MCM[1]	750-850 MCM	**1.252** 31.80	**.118** 3.00	**2.96** 75.18	324469
1000 MCM[1]	950-1125 MCM	**1.400** 35.56	**.131** 3.33	**3.27** 83.06	324471

[1] Two crimps necessary on each end.

Long Barrel Butt Splices

Wire Size Range:
1/0 AWG to 500 MCM
[50 to 253 mm²]

Base Material:
Annealed Copper — (ASTM B-188)
Electrodeposited Tin Plate — (MIL-T-10727)

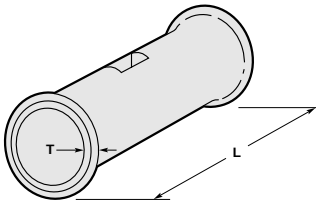

Wire Size	Wire Range	Barrel I.D. Min.	Dimensions T	Dimensions L Max.	Part Number
500 MCM	450-550 MCM	**.991** 25.17	**.092** 2.34	**4.75** 120.65	53089

Parallel Splices

Wire Size Range:
2 AWG to 1000 MCM
[34 to 507 mm²]

Base Material:
Annealed Copper — (ASTM B-188)
Electrodeposited Tin Plate — (MIL-T-10727)

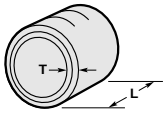

Wire Size	Wire Range	Barrel I.D. Min.	Dimensions T	Dimensions L Max.	Part Numbers
1/0 AWG	83,700-119,500 CM	**.468** 11.89	**.042** 1.07	**.58** 14.73	324443
2/0 AWG	119,500-190,000 CM	**.523** 13.28	**.047** 1.19	**.64** 16.26	324444
3/0 AWG	150,500-190,000 CM	**.586** 14.88	**.053** 1.35	**.71** 18.03	324445
4/0 AWG	190-231 MCM	**.658** 16.71	**.059** 1.50	**.77** 19.56	324446
250 MCM	231-275 MCM	**.700** 17.78	**.065** 1.65	**.83** 21.08	324447
300 MCM	275-325 MCM	**.768** 19.51	**.071** 1.80	**.89** 22.61	324448
350 MCM	325-375 MCM	**.829** 21.05	**.077** 1.96	**.96** 24.38	324449
400 MCM	375-450 MCM	**.886** 22.50	**.083** 2.11	**1.02** 25.91	324450
500 MCM	450-550 MCM	**.991** 25.17	**.092** 2.34	**1.11** 28.19	324451
700 MCM[1]	650-750 MCM	**1.172** 29.77	**.109** 2.77	**1.29** 32.77	324453
800 MCM[1]	750-850 MCM	**1.252** 31.80	**.118** 3.00	**1.36** 34.54	324454
1000 MCM[1]	950-1125 MCM	**1.400** 35.56	**.131** 3.33	**1.50** 38.10	324456

[1] Two crimps necessary.

For complete product information, order Catalog 82025

Products for Industrial & Commercial Applications
Dimensions are shown for reference purposes only.
Dimensions are in inches and millimeters unless otherwise specified. Values in brackets are metric equivalents.
Specifications subject to change.
Technical Support Center
1-800-522-6752
www.tycoelectronics.com

Tooling

DYNA-CRIMP Tool Heads and Dies



69099



68073-2



58445-1

69082



69065



69067

Hydraulic Hand Tool
Part No. 59973-1
(See chart for die numbers)



Part Numbers	Instruction Sheet	Wire Size	Dies
69099	408-2458	6 AWG	69133-1
		4 AWG	69134-2
		2 AWG	46765-3
		1/0 AWG	46766-2
		2/0 AWG	46767-2
		3/0 AWG	46749-2
		4/0 AWG	46750-2
		250 MCM	46751-2
		300 MCM	46752-2
		350 MCM	46753-2
69082	408-2456	350 MCM	69653
		400 MCM	46754-2
		500 MCM	46755-2
		600 MCM[1]	46756-2
		600 MCM HD[1]	59870-1
		700 MCM[1]	46757-2
		800 MCM[1]	46758-2
		900 MCM[1]	46759-2
		1000 MCM[1]	46760-2
68073-2	408-2449	1250 MCM[1]	68114-1
		1500 MCM[1]	68282-1
58445-1	408-9598	250 MCM	46751-2
69065 69067 59973-1 (Hand Tool)	408-2452 408-2454 408-6803	2 AWG	46321-3
		1/0 AWG	46322-2
		2/0 AWG	46323-2
		3/0 AWG	46324-2
		4/0 AWG	46325-2

[1] Terminals and splices, wire sizes 600 MCM through 1500 MCM, require two crimps for optimum mechanical and electrical performance.

For complete product information, order Catalog 82025

Products for Industrial & Commercial Applications
Dimensions are shown for reference purposes only.
Dimensions are in inches and millimeters unless otherwise specified. Values in brackets are metric equivalents.
Specifications subject to change.
Technical Support Center
1-800-522-6752
www.tycoelectronics.com

Product Facts

- Pre-insulated terminal designed for complete and uniform reliability in the most difficult circuit environments
- PIDG Terminals consist of tin plated copper or tin plated phosphor bronze body for spring spades with a copper sleeve and insulation sleeve fitted over terminal barrel
- Design of the tool dies and construction of the terminal insures uniform insulation thickness under crimping pressure, transmitting this pressure evenly to the center of the crimp area

The AMP Mated Tool/Terminal Concept

- AMP compression crimping produces crimps for a given size wire and terminal that are precisely alike in appear-ance and performance
- Terminal and crimping tool are designed as precisely matched devices
- Dies are precision-engineered from the finest hard-metal alloys
- Crimping pressure is controlled by a ratchet device on the hand tool or a correspond-ing pre-calibration in the crimping jaws of AMP automated crimping machines

The Crimp

- Crimping pressure can neither overstress nor understress the terminal barrel — machined dies fully bottom to the precise crimp height
- Resulting termination is free of contamination
- Resistant to shock and criti-cal environments
- Tensile strength approaches that of the wire itself
- PIDG Terminals meet or exceed the requirements of MIL-T-7928, Type II, Class 1 and 2

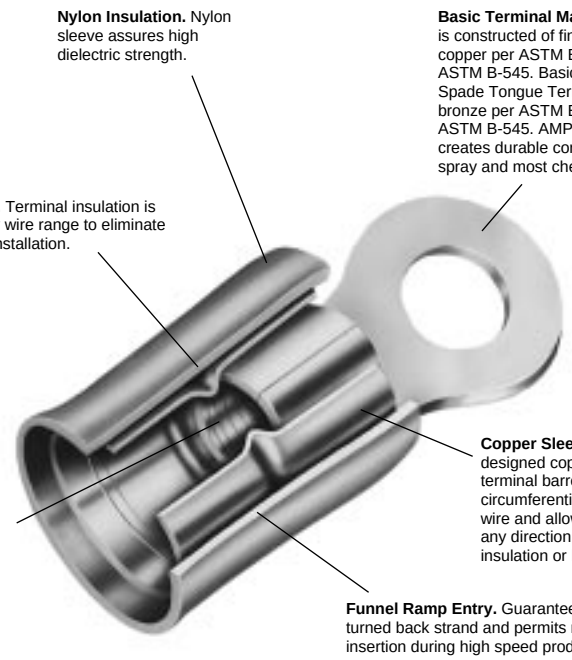

Temperature Rating: 105°C Max.

Note: Over size expansions are provided in vinyl insulation only.

AMP PIDG Terminals (Use PIDG Tooling)

AMP Wire Range	UL Listed	CSA LR7189 Certified
22-16	22-16 Solid or Stranded	300 V Max., 105°C. Max.[1]
16-14	16-14 Solid or Stranded	
12-10	12-10 Solid or Stranded	

Note: 22-16 terminals are stamped 22-18 in accordance with MIL-T-7928.

[1]UL & CSA — Nylon

AMP PIDG Nylon Butt Window Splice (Use PIDG Tooling)

AMP Wire Range	UL Listed	CSA LR7189 Certified
22-16	22-16 Stranded or Solid	300 V Max., 105°C. Max.
16-14	16-14 Stranded or Solid	
12-10	12-10 Stranded or Solid	

Note: 22-16 splices are stamped 22-18 in accordance with MIL-T-7928.

Ring Tongue Terminals-Nylon

Material and Finish:

Insulation — Nylon
Terminal Body and Metallic
Sleeve — Copper per ASTM B-152
Plating — Tin per ASTM B-545

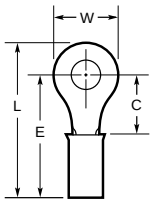

Wire Size Circular Mils [mm²]	Tongue Material Thickness Max.	Stud Size	Dimensions W	C Min.	E Max.	L Max.	Terminal Insulation Color	Wire Insulation Diameter Max.	Part Numbers Loose Piece	Part Numbers Tape Mounted
26-24 238-475 [0.12-0.24]	**.029** 0.74	2 M2	**.203** 5.16	**.211** 5.36	**.632** 16.05	**.739** 18.77	Yellow	**.105** 2.67	54310-1†	—
		4	**.203** 5.16	**.211** 5.36	**.632** 16.05	**.736** 18.69	Yellow	**.105** 2.67	52189†	—
		8 M4	**.281** 7.14	**.250** 6.35	**.671** 17.04	**.814** 20.68	Yellow	**.105** 2.67	54311-1†	—
26-22 202-810 [0.10-0.41]	**.020** 0.51	0	**.140** 3.56	**.121** 3.07	**.452** 11.48	**.525** 13.34	Yellow	**.082** 2.08	321013	—
		2 M2	**.140** 3.56	**.121** 3.07	**.452** 11.48	**.525** 13.34	Yellow	**.082** 2.08	—	2-323912-1
			.140 3.56	**.211** 5.36	**.542** 13.77	**.615** 15.62	Yellow	**.082** 2.08	329951*	—
			.203 5.16	**.211** 5.36	**.542** 13.77	**.646** 16.41	Yellow	**.082** 2.08	323913	—
		8 M4	**.250** 6.35	**.281** 7.14	**.612** 15.54	**.740** 18.80	Yellow	**.082** 2.08	—	2-323916-1
24-20 320-1,290 [0.16-0.65]	**.025** 0.64	4	**.281** 7.14	**.250** 6.35	**.631** 16.03	**.774** 19.66	Natural	**.100** 2.54	323985	—
		6 M3.5	**.281** 7.14	**.250** 6.35	**.631** 16.03	**.774** 19.66	Natural	**.100** 2.54	323986	—
		8 M4	**.312** 7.92	**.281** 7.14	**.662** 16.81	**.821** 20.85	Natural	**.100** 2.54	323989	—
		10	**.312** 7.92	**.281** 7.14	**.662** 16.81	**.821** 20.85	Natural	**.100** 2.54	323990	—
22-16 509-3,260 [0.26-1.65]	**.033** 0.84	2 M2	**.182** 4.62	**.172** 4.37	**.576** 14.63	**.669** 16.99	Red	**.125** 3.18	324158	—
			.218 5.54	**.156** 3.96	**.560** 14.22	**.672** 17.07	Red	**.125** 3.18	328657*	—
		4	**.182** 4.62	**.172** 4.37	**.576** 14.63	**.669** 16.99	Red/Green	**.125** 3.18	327654*	—
			.182 4.62	**.172** 4.37	**.576** 14.63	**.669** 16.99	Red	**.140** 3.56	320882*	2-320882-1
			.218 5.54	**.156** 3.96	**.560** 14.22	**.672** 17.07	Red	**.125** 3.18	—	2-320553-2
			.218 5.54	**.156** 3.96	**.560** 14.22	**.672** 17.07	Red	**.125** 3.18	36254[1]	
			.250 6.35	**.312** 7.92	**.716** 18.19	**.844** 21.44	Red	**.140** 3.56	330648	2-330648-1
		6 M3.5	**.218** 5.54	**.156** 3.96	**.560** 14.22	**.672** 17.07	Red	**.125** 3.18	—	2-36149-2
			.218 5.54	**.156** 3.96	**.560** 14.22	**.672** 17.07	Red	**.140** 3.56	36150*	2-36150-1
			.250 6.35	**.250** 6.35	**.654** 16.61	**.782** 19.86	Red	**.125** 3.18	51863*	51863-1
			.312 7.92	**.281** 7.14	**.685** 17.40	**.844** 21.44	Red	**.125** 3.18	323008	—
			.312 7.92	**.281** 7.14	**.685** 17.40	**.844** 21.44	Red	**.140** 3.56	326878	—
		8 M4	**.281** 7.14	**.250** 6.35	**.654** 16.61	**.797** 20.24	Red	**.125** 3.18	320554*	2-320554-1
		10	**.281** 7.14	**.250** 6.35	**.654** 16.61	**.797** 20.24	Red	**.140** 3.56	—	2-31887-1
			.312 7.92	**.281** 7.14	**.685** 17.40	**.844** 21.44	Red	**.125** 3.18	—	2-36153-2
			.344 8.74	**.297** 7.54	**.701** 17.81	**.876** 22.25	Red	**.125** 3.18	32836*	—
			.344 8.74	**.297** 7.54	**.701** 17.81	**.876** 22.25	Red	**.140** 3.56	32837*	32837-1

*Available in small packaging quantities.
[1] Slightly larger than standard #4 stud hole. (.128 in./3.25 mm.)
Note: "C" dimension applies from edge of metal wire barrel to center of stud hole.
†Must be crimped with 22-18 or 22-16 PIDG (red) Tooling

For complete product information, order Catalog 82042

Products for Industrial & Commercial Applications

Dimensions are shown for reference purposes only.

Dimensions are in inches and millimeters unless otherwise specified. Values in brackets are metric equivalents.

Specifications subject to change.

Technical Support Center
1-800-522-6752
www.tycoelectronics.com

Ring Tongue Terminals-Nylon

Material and Finish:

Insulation — Nylon
Terminal Body and Metallic Sleeve — Copper per ASTM B-152
Plating — Tin per ASTM B-545

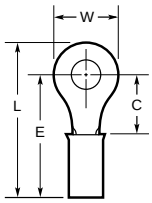

Wire Size Circular Mils [mm²]	Tongue Material Thickness Max.	Stud Size	Dimensions W	C Min.	E Max.	L Max.	Terminal Insulation Color	Wire Insulation Diameter Max.	Part Numbers Loose Piece	Part Numbers Tape Mounted
22-16 509-3,260 [0.26-1.65]	**.033** 0.84	5/16 M8	**.469** 11.91	**.437** 11.10	**.841** 21.36	**1.078** 27.38	Red	**.125** 3.18	320572*	2-320572-1
			.469 11.91	**.437** 11.10	**.841** 21.36	**1.078** 27.38	Red	**.140** 3.56	31895*	2-31895-1
			.531 13.49	**.546** 13.87	**.950** 24.13	**1.218** 30.94	Red	**.125** 3.18	324123	—
		3/8	**.531** 13.49	**.546** 13.87	**.950** 24.13	**1.218** 30.94	Red	**.125** 3.18	320573*	2-320573-4
			.531 13.49	**.546** 13.87	**.950** 24.13	**1.218** 30.94	Red	**.140** 3.56	31897*	2-31897-2
		1/2 M12	**.713** 18.11	**.530** 13.46	**.934** 23.72	**1.293** 32.84	Red	**.125** 3.18	328975*	—
16-14 2,050-5,180 [1.04-2.62]	**.033** 0.84	4	**.250** 6.35	**.171** 4.34	**.575** 14.61	**.703** 17.86	Blue	**.150** 3.81	324159*	2-324159-2
			.250 6.35	**.171** 4.34	**.575** 14.61	**.703** 17.86	Blue	**.170** 4.32	—	2-328996-1
			.250 6.35	**.281** 7.14	**.685** 17.40	**.813** 20.65	Blue	**.150** 3.81	323676	—
		6 M3.5	**.250** 6.35	**.171** 4.34	**.575** 14.61	**.703** 17.86	Blue	**.150** 3.81	—	2-320561-2
			.250 6.35	**.281** 7.14	**.685** 17.40	**.813** 20.65	Blue	**.170** 4.32	50881	50881-2
			.312 7.92	**.250** 6.35	**.654** 16.61	**.813** 20.65	Blue	**.170** 4.32	326882*	2-326882-1
			.343 8.71	**.281** 7.14	**.685** 17.40	**.859** 21.82	Blue	**.150** 3.81	36157*	—
		8 M4	**.312** 7.92	**.250** 6.35	**.654** 16.61	**.813** 20.65	Blue	**.170** 4.32	—	53941-2
			.343 8.71	**.281** 7.14	**.685** 17.40	**.859** 21.82	Blue	**.150** 3.81	320560*	2-320560-1
		10	**.312** 7.92	**.250** 6.35	**.654** 16.61	**.813** 20.65	Blue	**.170** 4.32	53942-1	53942-2
			.343 8.71	**.281** 7.14	**.685** 17.40	**.859** 21.82	Blue	**.150** 3.81	320574*	2-320574-2
			.469 11.91	**.437** 11.10	**.841** 21.36	**1.078** 27.38	Blue	**.170** 4.32	324533	—
		5/16 M8	**.469** 11.91	**.437** 11.10	**.841** 21.36	**1.078** 27.38	Blue	**.150** 3.81	320575*	2-320575-1
			.469 11.91	**.437** 11.10	**.841** 21.36	**1.078** 27.38	Blue	**.170** 4.32	328998*	2-328998-1
		3/8	**.531** 13.49	**.546** 13.87	**.950** 24.13	**1.218** 30.94	Blue	**.150** 3.81	320564*	—
			.531 13.49	**.546** 13.87	**.950** 24.13	**1.218** 30.94	Blue	**.170** 4.32	—	2-328999-1
		1/2 M12	**.713** 18.11	**.530** 13.46	**.934** 23.72	**1.293** 32.84	Blue	**.170** 4.32	328849*	—
16-14HD[1] 2,050-5,180 [1.04-2.62]	**.050** 1.27	6 M3.5	**.281** 7.14	**.219** 5.56	**.810** 20.57	**.953** 24.21	Yellow/Blk.	**.230** 5.84	320631*	—
			.281 7.14	**.219** 5.56	**.810** 20.57	**.953** 24.21	Yellow/Blk.	**.250** 6.35	35634*	—
		8 M4	**.343** 8.71	**.281** 7.14	**.872** 22.15	**1.046** 26.57	Yellow/Blk.	**.230** 5.84	320627*	—
			.343 8.71	**.281** 7.14	**.872** 22.15	**1.046** 26.57	Yellow/Blk.	**.250** 6.35	35106*	2-35106-1
		10	**.343** 8.71	**.281** 7.14	**.872** 22.15	**1.046** 26.57	Yellow/Blk.	**.230** 5.84	320630*	2-320630-2

*Available in small packaging quantities.
[1] Heavy duty for extra mechanical strength.
Note: "C" dimension applies from edge of metal wire barrel to center of stud hole.

For complete product information, order Catalog 82042

Products for Industrial & Commercial Applications

Dimensions are shown for reference purposes only.

Dimensions are in inches and millimeters unless otherwise specified. Values in brackets are metric equivalents.

Specifications subject to change.

Technical Support Center
1-800-522-6752
www.tycoelectronics.com

Ring Tongue Terminals-Nylon

Material and Finish:

Insulation — Nylon
Terminal Body and Metallic
Sleeve — Copper per ASTM B-152
Plating — Tin per ASTM B-545 except where noted.

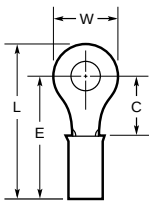

Wire Size Circular Mils [mm²]	Tongue Material Thickness Max.	Stud Size	Dimensions W	C Min.	E Max.	L Max.	Terminal Insulation Color	Wire Insulation Diameter Max.	Part Numbers Loose Piece	Part Numbers Tape Mounted
16-14HD[1] 2,050-5,180 [1.04-2.62]	**.050** 1.27	1/4 M6	**.500** 12.70	**.344** 8.74	**.935** 23.75	**1.188** 30.18	Yellow/Blk.	**.230** 5.84	34974*	2-34974-1
			.500 12.70	**.344** 8.74	**.935** 23.75	**1.188** 30.18	Yellow/Blk.	**.250** 6.35	323682	2-323682-1
			.531 13.49	**.437** 11.10	**1.028** 26.11	**1.296** 32.92	Yellow/Blk.	**.250** 6.35	34806*	—
		5/16 M8	**.531** 13.49	**.437** 11.10	**1.028** 26.11	**1.296** 32.92	Yellow/Blk.	**.250** 6.35	34810	—
		3/8	**.531** 13.49	**.437** 11.10	**1.028** 26.11	**1.296** 32.92	Yellow/Blk.	**.230** 5.84	330896	—
		1/2 M12	**.750** 19.05	**.625** 15.88	**1.216** 30.89	**1.594** 40.49	Yellow/Blk.	**.250** 6.35	35316*	—
			1.250 31.75	**1.000** 25.40	**1.591** 40.41	**2.219** 56.36	Yellow/Blk.	**.250** 6.35	36203	—
		3/4	**1.250** 31.75	**1.000** 25.40	**1.591** 40.41	**2.219** 56.36	Yellow/Blk.	**.250** 6.35	322724	—
12-10 5,180-13,100 [2.62-6.64]	**.042** 1.07	4	**.281** 7.14	**.219** 5.56	**.810** 20.57	**.953** 24.21	Yellow	**.250** 6.35	35148*	—
		6 M3.5	**.281** 7.14	**.219** 5.56	**.810** 20.57	**.953** 24.21	Yellow	**.230** 5.84	320634*	2-320634-1
			.281 7.14	**.219** 5.56	**.810** 20.57	**.953** 24.21	Yellow	**.250** 6.35	35149*	—
			.312 7.92	**.302** 7.67	**.893** 22.68	**1.052** 26.72	Yellow	**.230** 5.84	326886	—
			.375 9.53	**.302** 7.67	**.893** 22.68	**1.083** 27.51	Yellow	**.250** 6.35	—	2-35107-1
		8 M4	**.312** 7.92	**.281** 7.14	**.872** 22.15	**1.031** 26.19	Yellow	**.230** 5.84	35787*	1-35787-0
			.312 7.92	**.302** 7.67	**.893** 22.68	**1.052** 26.72	Yellow	**.230** 5.84	324915*	—
		10	**.312** 7.92	**.302** 7.67	**.893** 22.68	**1.052** 26.72	Yellow	**.230** 5.84	324918*	1-324918-0
			.343 8.71	**.281** 7.14	**.872** 22.15	**1.046** 26.57	Yellow	**.230** 5.84	—	1-32883-0
			.375 9.53	**.302** 7.67	**.893** 22.68	**1.083** 27.51	Yellow	**.230** 5.84	36161*	—
			.500 12.70	**.344** 8.74	**1.179** 29.95	**1.432** 36.37	Yellow	**.220** 5.59	329389	—
		1/4 M6	**.500** 12.70	**.344** 8.74	**.935** 23.75	**1.188** 30.18	Yellow	**.230** 5.84	35273*	—
			.531 13.49	**.468** 11.89	**1.054** 26.77	**1.322** 33.58	Yellow	**.230** 5.84	320569*	—
		5/16 M8	**.531** 13.49	**.468** 11.89	**1.054** 26.77	**1.322** 33.58	Yellow	**.250** 6.35	35111*	—
		3/8	**.593** 15.06	**.531** 13.49	**1.115** 28.32	**1.414** 35.92	Yellow	**.230** 5.84	320577*	2-320577-3
			.593 15.06	**.531** 13.49	**1.115** 28.32	**1.414** 35.92	Yellow	**.250** 6.35	35112*	—
		1/2 M12	**.750** 19.05	**.625** 15.88	**1.216** 30.89	**1.594** 40.49	Yellow	**.250** 6.35	35151*	—

*Available in small packaging quantities.
[1] Heavy duty for extra mechanical strength.
Note: "C" dimension applies from edge of metal wire barrel to center of stud hole.

Ring Tongue Terminals –– Vinyl

Material and Finish:

Insulation — Vinyl
Terminal Body and Metallic Sleeve — Copper per ASTM B-152
Plating — Tin per ASTM B-545 except where noted.

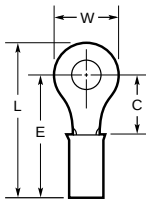

Wire Size Circular Mils [mm²]	Tongue Material Thickness Max.	Stud Size	Dimensions W	C Min.	E Max.	L Max.	Terminal Insulation Color	Wire Insulation Diameter Max.	Part Numbers Loose Piece	Tape Mounted
16-14HD[1] 2,050-5,180 [1.04-2.62]	**.050** 1.27	10	**.343** 8.71	**.281** 7.14	**.961** 24.41	**1.135** 28.83	Yellow/Blk.	**.300** 7.62	35363*	—
12-10 5,180-13,100 [2.62-6.64]	**.042** 1.07	6 M3.5	**.375** 9.53	**.302** 7.67	**.982** 24.94	**1.172** 29.77	Yellow	**.300** 7.62	35604	—
		8 M4	**.375** 9.53	**.302** 7.67	**.982** 24.94	**1.172** 29.77	Yellow	**.300** 7.62	35605*	2-35605-2
		10	**.375** 9.53	**.302** 7.67	**.982** 24.94	**1.172** 29.77	Yellow	**.300** 7.62	35364*	—
		1/4 M6	**.500** 12.70	**.344** 8.74	**1.024** 26.01	**1.277** 32.44	Yellow	**.300** 7.62	323763	—
			.531 13.49	**.468** 11.89	**1.148** 29.16	**1.416** 35.97	Yellow	**.300** 7.62	35345*	2-35345-1
		5/16 M8	**.531** 13.49	**.468** 11.89	**1.148** 29.16	**1.416** 35.97	Yellow	**.300** 7.62	35346*	2-35346-1
		3/8	**.593** 15.06	**.531** 13.49	**1.211** 30.76	**1.510** 38.35	Yellow	**.300** 7.62	35478	1-35478-0

*Available in small packaging quantities.
[1] Heavy duty for extra mechanical strength.
Note: "C" dimension applies from edge of metal wire barrel to center of stud hole.

Ring Tongue Terminals –– Insulation Restricting

Material and Finish:

Insulation — Nylon
Terminal Body — Copper per ASTM B-152
Plating — Tin per ASTM B-545
Metallic Sleeve — Copper per ASTM B-152
Plating — Nickel per QQ-N-290 or Tin per ASTM B-545

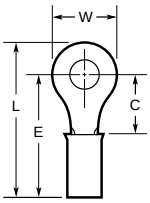

Wire Size Circular Mils [mm²]	Tongue Material Thickness Max.	Stud Size	Dimensions W	C Min.	E Max.	L Max.	Terminal Insulation Color Solid/Stripe	Wire Insulation Diameter Range	Part Numbers Loose Piece	Tape Mounted
24 475 [0.24]	**.020** 0.51	4	**.203** 5.16	**.211** 5.36	**.587** 14.91	**.691** 17.55	Yellow/Blue	**.031-.055** 0.79-1.40	2-323914-2	—
22 754 [0.38]	**.033** 0.84	4	**.218** 5.54	**.156** 3.96	**.622** 15.80	**.734** 18.64	Red/Green	**.038-.110** 0.97-2.79	52273*	—
		6 M3.5	**.218** 5.54	**.156** 3.96	**.622** 15.80	**.734** 18.64	Red/Green	**.038-.110** 0.97-2.79	2-36149-3*	—
			.250 6.35	**.250** 6.35	**.716** 18.19	**.844** 21.44	Red/Green	**.038-.110** 0.97-2.79	51863-2*	—
		8 M4	**.312** 7.92	**.281** 7.14	**.747** 18.97	**.906** 23.01	Red/Green	**.038-.110** 0.97-2.79	1-320551-2*	—
	.031 0.79	10	**.312** 7.92	**.281** 7.14	**.747** 18.97	**.906** 23.01	Red/Green	**.038-.110** 0.97-2.79	2-36153-3*	—

*Available in small packaging quantities.
[1] Heavy duty for extra mechanical strength.
[2] Terminal body plating — Gold per MIL-G-45204 Type II over Nickel per QQ-N-290.
[3] #10 stud may be substituted.
Note: "C" dimension applies from edge of metal wire barrel to center of stud hole.

For complete product information, order Catalog 82042

Products for Industrial & Commercial Applications

Dimensions are shown for reference purposes only.

Dimensions are in inches and millimeters unless otherwise specified. Values in brackets are metric equivalents.

Specifications subject to change.

Technical Support Center
1-800-522-6752
www.tycoelectronics.com

Ring Tongue Terminals –– Insulation Restricting

Material and Finish:

Insulation — Nylon
Terminal Body — Copper per ASTM B-152
Plating — Tin per ASTM B-545

Metallic Sleeve — Copper per ASTM B-152
Plating — Nickel per QQ-N-290 or Tin per ASTM B-545

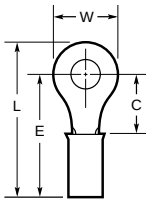

Wire Size Circular Mils [mm²]	Tongue Material Thickness Max.	Stud Size	Dimensions W	C Min.	E Max.	L Max.	Terminal Insulation Color Solid/Stripe	Wire Insulation Diameter Range	Part Numbers Loose Piece	Part Numbers Tape Mounted
20 1,186 [0.60]	.033 0.84	4	.218 5.54	.156 3.96	.622 15.80	.734 18.64	Red/Red	.046-.110 1.17-2.79	52273-1*	—
		6 M3.5	.218 5.54	.156 3.96	.622 15.80	.734 18.64	Red/Red	.046-.110 1.17-2.79	2-36149-4*	—
			.250 6.35	.250 6.35	.716 18.19	.844 21.44	Red/Red	.046-.110 1.17-2.79	51863-3	—
		8 M4	.312 7.92	.281 7.14	.747 18.97	.906 23.01	Red/Red	.046-.110 1.17-2.79	1-320551-3*	—
		10	.312 7.92	.281 7.14	.747 18.97	.906 23.01	Red/Red	.046-.110 1.17-2.79	2-36153-4*	—
		1/4 M6	.469 11.91	.437 11.10	.903 22.94	1.140 28.96	Red/Red	.046-.110 1.17-2.79	2-320571-4	—
		5/16 M8	.469 11.91	.437 11.10	.903 22.94	1.140 28.96	Red/Red	.046-.110 1.17-2.79	2-320572-3	—
18 1,900 [0.96]	.033 0.84	4	.218 5.54	.156 3.96	.622 15.80	.734 18.64	Red/White	.056-.110 1.42-2.79	52273-2*	—
		6 M3.5	.218 5.54	.156 3.96	.622 15.80	.734 18.64	Red/White	.056-.110 1.42-2.79	2-36149-5*	—
			.250 6.35	.250 6.35	.716 18.19	.844 21.44	Red/White	.056-.110 1.42-2.79	51863-4*	—
		10	.312 7.92	.281 7.14	.747 18.97	.906 23.01	Red/White	.056-.110 1.42-2.79	2-36153-5*	—
16 2,800 [1.42]	.033 0.84	4	.250 6.35	.171 4.34	.637 16.18	.765 19.43	Blue/Blue	.063-.130 1.60-3.30	52274	—
		6 M3.5	.250 6.35	.171 4.34	.637 16.18	.765 19.43	Blue/Blue	.063-.130 1.60-3.30	2-320561-3*	—
		8 M4	.312 7.92	.281 7.14	.747 18.97	.906 23.01	Blue/Blue	.063-.130 1.60-3.30	1-51864-0*	—
		10	.312 7.92	.281 7.14	.747 18.97	.906 23.01	Blue/Blue	.063-.130 1.60-3.30	51864-7*	—
		1/4 M6	.469 11.91	.437 11.10	.903 22.94	1.140 28.96	Blue/Blue	.063-.130 1.60-3.30	2-320563-3	—
		3/8	.531 13.49	.546 13.87	1.012 25.70	1.280 32.51	Blue/Blue	.063-.130 1.60-3.30	2-320564-1	—
14 4,234 [2.15]	.033 0.84	6 M3.5	.250 6.35	.171 4.34	.637 16.18	.765 19.43	Blue/Green	.078-.130 1.98-3.30	2-320561-4	—
			.312 7.92	.281 7.14	.747 18.97	.906 23.01	Blue/Green	.078-.130 1.98-3.30	51864-8*	—
		8 M4	.312 7.92	.281 7.14	.747 18.97	.906 23.01	Blue/Green	.078-.130 1.98-3.30	1-51864-1*	—
		10	.312 7.92	.281 7.14	.747 18.97	.906 23.01	Blue/Green	.078-.130 1.98-3.30	51864-9*	—
12 6,654 [3.37]	.042 1.07	6 M3.5	.375 9.53	.302 7.67	.958 24.33	1.148 29.16	Yellow/Yellow	.095-.200 2.41-5.08	2-36161-5	—
		8 M4	.375 9.53	.302 7.67	.958 24.33	1.148 29.16	Yellow/Yellow	.095-.200 2.41-5.08	2-320568-2*	—
		10	.375 9.53	.302 7.67	.958 24.33	1.148 29.16	Yellow/Yellow	.095-.200 2.41-5.08	2-36161-3*	—
		1/4 M6	.531 13.49	.468 11.89	1.124 28.55	1.392 35.36	Yellow/Yellow	.095-.200 2.41-5.08	2-320569-5	—
10 12,066 [6.11]	.042 1.07	6 M3.5	.375 9.53	.302 7.67	.958 24.33	1.148 29.16	Yellow/Brown	.119-.200 3.02-5.08	2-36161-6	—
		8 M4	.375 9.53	.302 7.67	.958 24.33	1.148 29.16	Yellow/Brown	.119-.200 3.02-5.08	2-320568-3*	—
		10	.375 9.53	.302 7.67	.958 24.33	1.148 29.16	Yellow/Brown	.119-.200 3.02-5.08	2-36161-4	—
		1/4 M6	.531 13.49	.468 11.89	1.124 28.55	1.392 35.36	Yellow/Brown	.119-.200 3.02-5.08	2-320569-6	—
		5/16 M8	.531 13.49	.468 11.89	1.124 28.55	1.392 35.36	Yellow/Brown	.119-.200 3.02-5.08	2-320576-3	—

*Available in small packaging quantities.
Note: "C" dimension applies from edge of metal wire barrel to center of stud hole.

For complete product information, order Catalog 82042

Products for Industrial & Commercial Applications

Dimensions are shown for reference purposes only.

Dimensions are in inches and millimeters unless otherwise specified. Values in brackets are metric equivalents.

Specifications subject to change.

Technical Support Center
1-800-522-6752
www.tycoelectronics.com

Rectangular Tongue Terminals

Material and Finish:

Insulation — Nylon
Terminal Body and Metallic
Sleeve — Copper per ASTM B-152 except where noted.
Plating — Tin per ASTM B-545

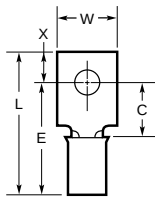

Wire Size Circular Mils [mm²]	Tongue Material Thickness Max.	Stud Size	Dimensions W	C Min.	E Max.	L Max.	X	Terminal Insulation Color	Wire Insulation Diameter Max.	Part Numbers Loose Piece	Tape Mounted
22-16 500 [0.26-1.65]	.033 0.84	4	**.237** 6.02	**.404** 10.26	**.810** 20.57	**1.015** 25.78	**.195** 4.95	Red	**.140** 3.56	327962	—
		6 M3.5	**.237** 6.02	**.404** 10.26	**.810** 20.57	**1.015** 25.78	**.195** 4.95	Red	**.140** 3.56	2-327956-1	—
16-14 2,050-5,180 [1.04-2.62]	**.033** 0.84	6 M3.5	**.244** 6.20	**.312** 7.92	**.716** 18.19	**.856** 21.74	**.125** 3.18	Blue	**.170** 4.32	33173*	—
		8 M4	**.302** 7.67	**.465** 11.81	**.872** 22.15	**1.109** 28.17	**.227** 5.77	Blue	**.150** 3.81	2-327946-4	—
12-10 5,180-13,100 [2.62-6.64]	**.042** 1.07	5 M3	**.277** 7.04	**.277** 7.04	**.889** 22.58	**1.042** 26.47	**.143** 3.63	Yellow	**.230** 5.84	327954	—
		6 M3.5	**.237** 6.02	**.404** 10.26	**.998** 25.35	**1.203** 30.56	**.195** 4.95	Yellow	**.230** 5.84	2-327960-1	—

*Available in small packaging quantities.
Note: "C" dimension applies from edge of metal wire barrel to center of stud hole.

Spade Tongue Terminals

Material and Finish:

Insulation — Nylon
Terminal Body and Metallic
Sleeve — Copper per ASTM B-152
Plating — Tin per ASTM B-545

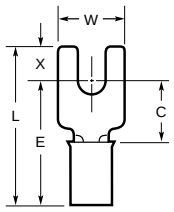

Wire Size Circular Mils [mm²]	Tongue Material Thickness Max.	Stud Size	Dimensions W	C Min.	E Max.	L Max.	X	Terminal Insulation Color	Wire Insulation Diameter Max.	Part Numbers Loose Piece	Tape Mounted
26-24 238-475 [0.12-0.24]	**.029** 0.74	6 M3.5	**.250** 6.35	**.211** 5.36	**.632** 16.05	**.709** 18.01	**.072** 1.83	Yellow	**.095** 2.41	—	53115-2
26-22 202-810 [0.10-0.41]	**.020** 0.51	4	**.203** 5.16	**.211** 5.36	**.542** 13.77	**.627** 15.93	**.076** 1.93	Yellow	**.082** 2.08	321035*	2-321035-1
22-16 509-3,260 [0.26-1.65]	**.033** 0.84	2 M2	**.182** 4.62	**.203** 5.16	**.607** 15.42	**.727** 18.47	**.115** 2.92	Red	**.140** 3.56	—	2-328394-1
		4	**.218** 5.54	**.156** 3.96	**.560** 14.22	**.674** 17.12	**.109** 2.77	Red	**.125** 3.18	1-327717-0	—
			.218 5.54	**.156** 3.96	**.560** 14.22	**.674** 17.12	**.109** 2.77	Red	**.140** 3.56	327717*	—
		6 M3.5	**.297** 7.54	**.203** 5.16	**.607** 15.42	**.753** 19.13	**.141** 3.58	Red	**.125** 3.18	34080*	2-34080-1
			.297 7.54	**.203** 5.16	**.607** 15.42	**.753** 19.13	**.141** 3.58	Red	**.140** 3.56	—	2-326861-1
		8 M4	**.375** 9.53	**.312** 7.92	**.716** 18.19	**.908** 23.06	**.187** 4.75	Red	**.125** 3.18	32050*	—
		10	**.375** 9.53	**.312** 7.92	**.716** 18.19	**.908** 23.06	**.187** 4.75	Red	**.125** 3.18	32051*	2-32051-1
			.375 9.53	**.312** 7.92	**.716** 18.19	**.908** 23.06	**.187** 4.75	Red	**.140** 3.56	32054*	2-32054-1

*Available in small packaging quantities.
Note: "C" dimension applies from edge of metal wire barrel to center of stud hole.

For complete product information, order Catalog 82042

Products for Industrial & Commercial Applications

Dimensions are shown for reference purposes only.

Dimensions are in inches and millimeters unless otherwise specified. Values in brackets are metric equivalents.

Specifications subject to change.

Technical Support Center
1-800-522-6752
www.tycoelectronics.com

Spade Tongue Terminals

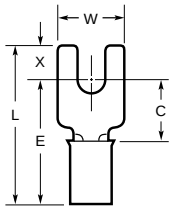

Material and Finish:

Insulation — Nylon
Terminal Body and Metallic Sleeve — Copper per ASTM B-152
Plating — Tin per ASTM B-545

Wire Size Circular Mils [mm²]	Tongue Material Thickness Max.	Stud Size	Dimensions W	C Min.	E Max.	L Max.	X	Terminal Insulation Color	Wire Insulation Diameter Max.	Part Numbers Loose Piece	Part Numbers Tape Mounted
16-14 2,050-5,180 [1.04-2.62]	**.033** 0.84	6 M3.5	**.297** 7.54	**.203** 5.16	**.607** 15.42	**.753** 19.13	**.141** 3.58	Blue	**.170** 4.32	—	2-35559-1
		10	**.385** 9.78	**.312** 7.92	**.716** 18.19	**.908** 23.06	**.187** 4.75	Blue	**.170** 4.32	—	2-32060-1
12-10 5,180-13,100 [2.62-6.64]	**.042** 1.07	6 M3.5	**.312** 7.92	**.296** 7.52	**.887** 22.53	**1.095** 27.81	**.203** 5.16	Yellow	**.230** 5.84	—	2-326859-1
		8 M4	**.406** 10.31	**.296** 7.52	**.887** 22.53	**1.095** 27.81	**.203** 5.16	Yellow	**.230** 5.84	—	2-32588-1
			.406 10.31	**.296** 7.52	**.887** 22.53	**1.095** 27.81	**.203** 5.16	Yellow	**.250** 6.35	35152*	—
		10	**.406** 10.31	**.296** 7.52	**.887** 22.53	**1.095** 27.81	**.203** 5.16	Yellow	**.230** 5.84	—	2-32589-1

*Available in small packaging quantities.
Note: "C" dimension applies from edge of metal wire barrel to center of stud hole.

Flanged Spade Tongue Terminals

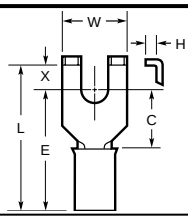

Material and Finish:

Insulation — Nylon
Terminal Body and Metallic Sleeve — Copper per ASTM B-152
Plating — Tin per ASTM B-545

Wire Size Circular Mils [mm²]	Tongue Material Thickness Max.	Stud Size	Dimensions W	C Min.	E Max.	L Max.	X	H Min.	Terminal Insulation Color	Wire Insulation Diameter Max.	Part Numbers Loose Piece	Part Numbers Tape Mounted
26-22 202-810 [0.10-0.41]	**.020** 0.51	2 M2	**.182** 4.62	**.203** 5.16	**.534** 13.56	**.649** 16.48	**.110** 2.79	**.026** 0.66	Yellow	**.082** 2.08	324597*	—
		4	**.193** 4.90	**.203** 5.16	**.534** 13.56	**.649** 16.48	**.110** 2.79	**.026** 0.66	Yellow	**.082** 2.08	52369*	—
		6 M3.5	**.250** 6.35	**.203** 5.16	**.534** 13.56	**.649** 16.48	**.110** 2.79	**.026** 0.66	Yellow	**.082** 2.08	—	51874-1
22-16 509-3,260 [0.26-1.65]	**.033** 0.84	2 M2	**.182** 4.62	**.203** 5.16	**.607** 15.42	**.727** 18.47	**.115** 2.92	**.041** 1.04	Red	**.125** 3.18	2-324608-2	—
			.182 4.62	**.203** 5.16	**.607** 15.42	**.727** 18.47	**.115** 2.92	**.041** 1.04	Red	**.140** 3.56	324608*	—
		6 M3.5	**.250** 6.35	**.203** 5.16	**.607** 15.42	**.737** 18.72	**.125** 3.18	**.046** 1.17	Red	**.125** 3.18	322777*	2-322777-1
			.296 7.52	**.203** 5.16	**.607** 15.42	**.737** 18.72	**.125** 3.18	**.046** 1.17	Red	**.125** 3.18	—	2-32561-1
			.296 7.52	**.203** 5.16	**.607** 15.42	**.737** 18.72	**.125** 3.18	**.046** 1.17	Red	**.140** 3.56	—	2-32562-1
		8 M4	**.416** 10.57	**.250** 6.35	**.654** 16.61	**.830** 21.08	**.171** 4.34	**.062** 1.57	Red	**.125** 3.18	32497	—
			.416 10.57	**.250** 6.35	**.654** 16.61	**.830** 21.08	**.171** 4.34	**.062** 1.57	Red	**.140** 3.56	32498*	2-32498-1
16-14 2,050-5,180 [1.04-2.62]	**.033** 0.84	6 M3.5	**.294** 7.47	**.203** 5.16	**.607** 15.42	**.737** 18.72	**.125** 3.18	**.047** 1.19	Blue	**.150** 3.81	2-320861-2	—
			.294 7.47	**.203** 5.16	**.607** 15.42	**.737** 18.72	**.125** 3.18	**.047** 1.19	Blue	**.170** 4.32	—	2-320861-1
		8 M4	**.294** 7.47	**.203** 5.16	**.607** 15.42	**.737** 18.72	**.125** 3.18	**.047** 1.19	Blue	**.170** 4.32	—	2-320862-1
			.416 10.57	**.250** 6.35	**.654** 16.61	**.830** 21.08	**.171** 4.34	**.062** 1.57	Blue	**.150** 3.81	33155*	—
			.416 10.57	**.250** 6.35	**.654** 16.61	**.830** 21.08	**.171** 4.34	**.062** 1.57	Blue	**.170** 4.32	33156	—
		10	**.294** 7.47	**.203** 5.16	**.607** 15.42	**.737** 18.72	**.125** 3.18	**.052** 1.19	Blue	**.170** 4.32	320863*	2-320863-2

*Available in small packaging quantities.
Note: "C" dimension applies from edge of metal wire barrel to center of stud hole.

For complete product information, order Catalog 82042

Products for Industrial & Commercial Applications

Dimensions are shown for reference purposes only.

Dimensions are in inches and millimeters unless otherwise specified. Values in brackets are metric equivalents.

Specifications subject to change.

Technical Support Center
1-800-522-6752
www.tycoelectronics.com

Flanged Spade Tongue Terminals

Material and Finish:

Insulation — Nylon
Terminal Body and Metallic Sleeve — Copper per ASTM B-152
Plating — Tin per ASTM B-545

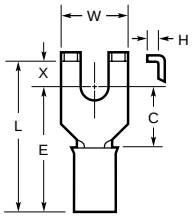

Wire Size Circular Mils [mm²]	Tongue Material Thickness Max.	Stud Size	Dimensions W	C Min.	E Max.	L Max.	X	H Min.	Terminal Insulation Color	Wire Insulation Diameter Max.	Part Numbers Loose Piece	Tape Mounted
12-10 5,180-13,100 [2.62-6.64]	**.042** 1.07	6 M3.5	**.328** 8.33	**.250** 6.35	**.841** 21.36	**1.017** 25.83	**.171** 4.34	**.052** 1.32	Yellow	**.230** 5.84	324587	—
		8 M4	**.416** 10.57	**.250** 6.35	**.841** 21.36	**1.017** 25.83	**.171** 4.34	**.052** 1.32	Yellow	**.230** 5.84	32510*	2-32510-1
		10	**.416** 10.57	**.250** 6.35	**.841** 21.36	**1.017** 25.83	**.171** 4.34	**.052** 1.32	Yellow	**.250** 6.35	324015*	2-324015-1

*Available in small packaging quantities.
Note: "C" dimension applies from edge of metal wire barrel to center of stud hole.

Short Spring Spade Tongue Terminals

Material and Finish:

Insulation — Nylon
Terminal Body — Phosphor Bronze per ASTM B-139
Metallic Sleeve — Copper per ASTM B-152
Plating — Tin per ASTM B-545

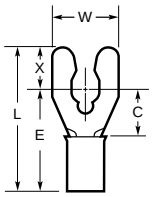

Wire Size Circular Mils [mm²]	Tongue Material Thickness Max.	Stud Size	Dimensions W	C Min.	E Max.	L Max.	X	Terminal Insulation Color	Wire Insulation Diameter Max.	Part Numbers Loose Piece	Tape Mounted
26-22 202-810 [0.10-0.41]	**.020** 0.51	4	**.203** 5.16	**.219** 5.56	**.550** 13.97	**.695** 17.65	**.140** 3.56	Yellow	**.082** 2.08	52922*	52922-1
		8 M4	**.375** 9.53	**.281** 7.14	**.612** 15.54	**.787** 19.99	**.170** 4.32	Yellow	**.082** 2.08	52925	52925-1
22-16 509-3,260 [0.26-1.65]	**.033** 0.84	4	**.203** 5.16	**.250** 6.35	**.654** 16.61	**.799** 20.29	**.140** 3.56	Red	**.125** 3.18	52927*	52927-1
		5 M3	**.250** 6.35	**.250** 6.35	**.654** 16.61	**.799** 20.29	**.140** 3.56	Red	**.125** 3.18	52928*	52928-1
		6 M3.5	**.250** 6.35	**.250** 6.35	**.654** 16.61	**.799** 20.29	**.140** 3.56	Red	**.125** 3.18	52929*	—
		8 M4	**.244** 6.20	**.281** 7.14	**.725** 18.42	**.895** 22.73	**.170** 4.32	Red	**.140** 3.56	—	55768-1
			.375 9.53	**.281** 7.14	**.685** 17.40	**.860** 21.84	**.170** 4.32	Red	**.125** 3.18	52930*	52930-1
			.375 9.53	**.281** 7.14	**.685** 17.40	**.860** 21.84	**.170** 4.32	Red	**.140** 3.56	—	52930-3
		10	**.406** 10.31	**.281** 7.14	**.685** 17.40	**.908** 23.06	**.218** 5.54	Red	**.125** 3.18	52931*	—
16-14 2,050-5,180 [1.04-2.62]	**.033** 0.84	5 M3	**.250** 6.35	**.250** 6.35	**.654** 16.61	**.799** 20.29	**.140** 3.56	Blue	**.170** 4.32	52934*	52934-1
		6 M3.5	**.250** 6.35	**.250** 6.35	**.654** 16.61	**.799** 20.29	**.140** 3.56	Blue	**.170** 4.32	52935*	52935-1
			.250 6.35	**.250** 6.35	**.654** 16.61	**.799** 20.29	**.140** 3.56	Blue	**.182** 4.62	52935-2*	52935-3
		8 M4	**.375** 9.53	**.281** 7.14	**.685** 17.40	**.860** 21.84	**.170** 4.32	Blue	**.170** 4.32	—	52936-1
			.375 9.53	**.281** 7.14	**.685** 17.40	**.860** 21.84	**.170** 4.32	Blue	**.182** 4.62	—	52936-3

*Available in small packaging quantities.
Note: "C" dimension applies from edge of metal wire barrel to center of stud hole.

Short Spring Spade Tongue Terminals

Material and Finish:

Insulation — Nylon

Terminal Body — Phosphor Bronze per ASTM B-139

Metallic Sleeve — Copper per ASTM B-152

Plating — Tin per ASTM B-545

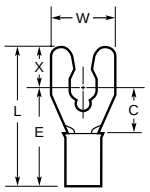

Wire Size Circular Mils [mm²]	Tongue Material Thickness Max.	Stud Size	Dimensions W	C Min.	E Max.	L Max.	X	Terminal Insulation Color	Wire Insulation Diameter Max.	Part Numbers Loose Piece	Part Numbers Tape Mounted
16-14 2,050-5,180 [1.04-2.62]	.033 0.84	10	.406 10.31	.281 7.14	.685 17.40	.908 23.06	.218 5.54	Blue	.170 4.32	52937*	52937-1
			.406 10.31	.281 7.14	.685 17.40	.908 23.06	.218 5.54	Blue	.182 4.62	52937-2*	52937-3
		1/4 M6	.625 15.88	.343 8.71	.747 18.97	1.033 26.24	.281 7.14	Blue	.170 4.32	52939	—
12-10 5,180-13,100 [2.62-6.64]	.042 1.07	8 M4	.375 9.53	.276 7.01	.877 22.28	1.052 26.72	.170 4.32	Yellow	.250 6.35	52942*	—
		1/4 M6	.625 15.88	.338 8.59	.939 23.85	1.225 31.12	.281 7.14	Yellow	.250 6.35	52945*	—

*Available in small packaging quantities.
Note: "C" dimension applies from edge of metal wire barrel to center of stud hole.

Long Spring Spade Tongue Terminals

Material and Finish:

Insulation — Nylon

Terminal Body — Phosphor Bronze per ASTM B-139

Metallic Sleeve — Copper per ASTM B-152

Plating — Tin per ASTM B-545

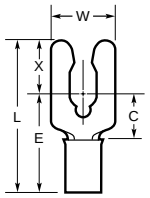

Wire Size Circular Mils [mm²]	Tongue Material Thickness Max.	Stud Size	Dimensions W	C Min.	E Max.	L Max.	X	Terminal Insulation Color	Wire Insulation Diameter Max.	Part Numbers Loose Piece	Part Numbers Tape Mounted
22-16 509-3,260 [0.26-1.65]	.033 0.84	6 M3.5	.250 6.35	.238 6.05	.652 16.56	.933 23.70	.276 7.01	Red	.125 3.18	52409*	52409-1
		8 M4	.281 7.14	.270 6.86	.684 17.37	.979 24.87	.290 7.37	Red	.125 3.18	—	52410-1
		10	.343 8.71	.283 7.19	.697 17.70	1.005 25.53	.303 7.70	Red	.125 3.18	—	52411-1
16-14 2,050-5,180 [1.04-2.62]	.033 0.84	6 M3.5	.250 6.35	.238 6.05	.652 16.56	.933 23.70	.276 7.01	Blue	.150 3.81	52420*	—
			.250 6.35	.238 6.05	.652 16.56	.933 23.70	.276 7.01	Blue	.170 4.32	52420-1*	52420-3
		8 M4	.281 7.14	.270 6.86	.684 17.37	.979 24.87	.290 7.37	Blue	.150 3.81	52421*	—
		10	.343 8.71	.283 7.19	.697 17.70	1.005 25.53	.303 7.70	Blue	.170 4.32	52422-1*	—
		1/4 M6	.437 11.10	.345 8.76	.759 19.28	1.102 27.99	.338 8.59	Blue	.150 3.81	52423	—
12-10 5,180-13,100 [2.62-6.64]	.042 1.07	8 M4	.375 9.53	.273 6.93	.874 22.20	1.174 29.82	.295 7.49	Yellow	.250 6.35	52431-1	—
		10	.375 9.53	.305 7.75	.906 23.01	1.219 30.96	.308 7.82	Yellow	.250 6.35	52432-1	—
		1/4 M6	.437 11.10	.345 8.76	.946 24.03	1.289 32.74	.338 8.59	Yellow	.250 6.35	52433-1	—

*Available in small packaging quantities.
Note: "C" dimension applies from edge of metal wire barrel to center of stud hole.

Slotted Ring Tongue Terminals

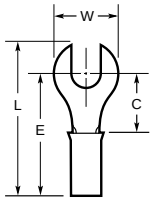

Material and Finish:

Insulation — Nylon
Terminal Body and Metallic Sleeve — Copper per ASTM B-152
Plating — Tin per ASTM B-545

Wire Size Circular Mils [mm²]	Tongue Material Thickness Max.	Stud Size	Dimensions W	C Min.	E Max.	L Max.	Terminal Insulation Color	Wire Insulation Diameter Max.	Part Numbers Loose Piece	Part Numbers Tape Mounted
26-22 202-810 [0.10-0.41]	**.020** 0.51	6 M3.5	**.250** 6.35	**.281** 7.14	**.612** 15.54	**.719** 18.26	Yellow	**.082** 2.08	323011	2-323011-2
22-16 509-3,260 [0.26-1.65]	**.033** 0.84	8 M4	**.281** 7.14	**.250** 6.35	**.654** 16.61	**.770** 19.56	Red	**.140** 3.56	36954*	—

*Available in small packaging quantities.
Note: "C" dimension applies from edge of metal wire barrel to center of stud hole.

Hook Tongue Terminals

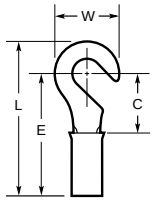

Material and Finish:

Insulation — Nylon
Terminal Body and Metallic Sleeve — Copper per ASTM B-152
Plating — Tin per ASTM B-545

Wire Size Circular Mils [mm²]	Tongue Material Thickness Max.	Stud Size	Dimensions W	C Min.	E Max.	L Max.	Terminal Insulation Color	Wire Insulation Diameter Max.	Part Numbers Loose Piece	Part Numbers Tape Mounted
16-14 2,050-5,180 [1.04-2.62]	**.033** 0.84	8 M4	**.343** 8.71	**.281** 7.14	**.685** 17.40	**.859** 21.82	Blue	**.170** 4.32	320306*	2-320306-1

*Available in small packaging quantities.
Note: "C" dimension applies from edge of metal wire barrel to center of stud hole.

Offset Ring Tongue Terminals

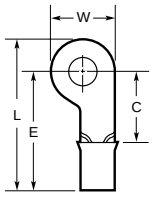

Material and Finish:

Insulation — Nylon
Terminal Body and Metallic Sleeve — Copper per ASTM B-152
Plating — Tin per ASTM B-545

Wire Size Circular Mils [mm²]	Tongue Material Thickness Max.	Stud Size	Dimensions W	C Min.	E Max.	L Max.	Terminal Insulation Color	Wire Insulation Diameter Max.	Part Numbers Loose Piece
22-16 509-3,260 [0.26-1.65]	**.033** 0.84	6 M3.5	**.375** 9.53	**.312** 7.92	**.716** 18.19	**.906** 23.01	Red	**.125** 3.18	323039

Note: "C" dimension applies from edge of metal wire barrel to center of stud hole.

Shur-Plug Terminal

Material and Finish:

Insulation — Nylon
Terminal Body and Metallic
Sleeve — Copper per ASTM B-152
Plating — Tin per ASTM B-545

.156 Series

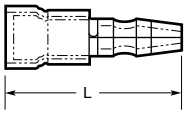

Wire Size Circular Mils [mm²]	Dimension L Max.	Terminal Insulation Color	Wire Insulation Diameter Max.	Part Numbers Loose Piece	Part Numbers Tape Mounted
16-14 2,050-5,180 [1.04-2.62]	**.790** 20.07	Blue	**.170** 4.32	—	2-324225-1

*Available in small packaging quantities.

Tabs

Material and Finish:

Insulation — Nylon
Terminal Body and Metallic
Sleeve — Copper per ASTM B-152
Plating — Tin per ASTM B-545

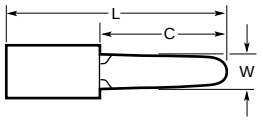

Wire Size Circular Mils [mm²]	Tongue Material Thickness Max.	Dimensions W	Dimensions C Min.	Dimensions L Max.	Dimensions D	Terminal Insulation Color	Wire Insulation Diameter Max.	Part Numbers Loose Piece
22-16 509-3,260 [0.26-1.65]	**.033** 0.84	**.140** 3.56	**.480** 12.19	**.904** 22.96	—	Red	**.140** 3.56	34294*

*Available in small packaging quantities.
Note: "C" dimension applies from edge of metal wire barrel to end of tab.

Knife Disconnect Splices

Material and Finish:

Insulation — Nylon
Splice Body and Metallic
Sleeve — Copper per ASTM B-152
Plating — Tin per ASTM B-545

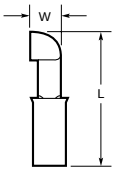

Wire Size Circular Mils [mm²]	Material Thickness	Dimensions W	Dimensions L Max.	Splice Insulation Color	Wire Insulation Diameter Max.	Part Numbers Loose Piece	Part Numbers Tape Mounted
22-16 509-3,260 [0.26-1.65]	**.031** 0.79	**.203** 5.16	**.878** 22.30	Red	**.125** 3.18	320555*	—
		.203 5.16	**.878** 22.30	Red	**.140** 3.56	32446*	2-32446-1
16-14 2,050-5,180 [1.04-2.62]	**.031** 0.79	**.203** 5.16	**.878** 22.30	Blue	**.150** 3.81	320566*	—
		.203 5.16	**.878** 22.30	Blue	**.170** 4.32	32448*	—
12-10 5,180-13,100 [2.62-6.64]	**.040** 1.02	**.281** 7.14	**1.234** 31.34	Yellow	**.230** 5.84	320620*	—
		.281 7.14	**1.260** 32.00	Yellow	**.250** 6.35	35762*	—

*Available in small packaging quantities.

For complete product information, order Catalog 82042

Products for Industrial & Commercial Applications

Dimensions are shown for reference purposes only.

Dimensions are in inches and millimeters unless otherwise specified. Values in brackets are metric equivalents.

Specifications subject to change.

Technical Support Center
1-800-522-6752
www.tycoelectronics.com

Butt Splices

Material and Finish:

Insulation Sleeve — Standard, Step Down Assembly and Nylon
Radiation Resistant – Polyvinylidene Fluoride (PVF_2)
Splice Body and Insulation Support Sleeve — Copper per ASTM B-152
Plating — Tin per ASTM B-545

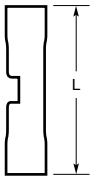

Standard and Radiation Resistant

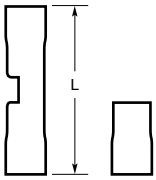

Step Down Assembly[1]

Wire Size Circular Mils[1] [mm²]	Style	Dimension L Max.	Splice Insulation Color	Wire Insulation Diameter Max.	Part Numbers	
					Loose Piece	Tape Mounted
26-24[2] 238-475 [0.12-0.24]	Standard	**.890** 22.61	Yellow	**.082** 2.08	323994	2-323994-1
26-22 202-810 [0.10-0.41]		**.890** 22.61	Yellow	**.082** 2.08	2-323994-2*	—
16-14 2,050-5,180 [1.04-2.62]		**1.265** 32.13	Blue	**.150** 3.81	—	2-320562-3
12-10 5,180-13,100 [2.62-6.64]		**1.656** 42.06	Yellow	**.220** 5.59	320570*	2-320570-3†
16-14 2,050-5,180 [1.04-2.62] to 22-18 509-1,900 [0.26-0.96]	Step Down Assembly	**1.265** 32.13	Blue	**.150/.115** 3.81/2.92	327583	2-327583-1
12-10 5,180-13,100 [2.62-6.64] to 22-18 509-1,900 [0.26-0.96]		**1.656** 42.06	Yellow	**.220/.140** 5.59/3.56	327639	—
12-10 5,180-13,100 [2.62-6.64] to 16-14 2,050-5,180 [1.04-2.62]		**1.656** 42.06	Yellow	**.220/.170** 5.59/4.32	327638	—
22-16[3] 509-3,260 [0.26-1.65]	Radiation Resistant	**1.265** 32.13	Natural w/ Red Stripes	**.125** 3.18	53548-1*	—
16-14 2,050-5,180 [1.04-2.62]		**1.265** 32.13	Natural w/ Blue Stripes	**.150** 3.81	53549-1*	—
12-10 5,180-13,100 [2.62-6.64]		**1.656** 42.06	Natural w/ Yellow Stripes	**.220** 5.59	53550-1*	—

*Available in small packaging quantities.
[1] When using two or more wires in either end of a butt splice, the combined cross sectional area must be within the (CMA) circular mil area range listed.
[2] 26-24 range in accordance with MIL-T-7928.
[3] 22-16 splices are 22-18 range in accordance with MIL-T-7928.
†Tapetronic only.

Radiation Resistant/150°C Pre-Insulated Terminals and Splices

Catalog 1307612
Revised 7-01

Product Facts

- **Select items have MIL-T-7928 approval under M7928/4 and /6**
- **Insulation is polyvinyl-idene fluoride (PVF_2) for high radiation resistance (to 200 megarads)**
- **Withstands 4 days of steam/chemical spray washdown which simulates LOCA (loss of coolant accident) conditions**
- **Temperature range of -65°C to +150°C**
- **Uses AMP standard PIDG and PLASTI-GRIP tooling**
- **Color coded for easy wire and tool match**
- **Covers wide range of wire sizes—AWG 26-2/0 [0.12-70 mm²]**
- **Tin-plated per MIL-T-10727**
- **Butt splice for wire sizes—AWG 26-10 [0.12-6 mm²]**



The line of AMP Radiation Resistant/150°C Pre-Insulated Terminals and Splices includes terminals and splices of the well-known PIDG designs. Radiation Resistant Terminals are made of fine grade, high conductivity copper with bright tin-plating and feature polyvinylidene fluoride (PVF_2) insulation for high resistance to radiation and solvents. PIDG terminals meet the performance requirements of MIL-T-7928. They are also tested by AMP and an independent test facility and have fulfilled all requirements including radiation testing to 200 megarads, operating temperature range from –65°C to +150°C and resistance to steam and various chemical solvents to simulate LOCA (loss of coolant accident) conditions.

These terminals and splices feature the outstanding qualities of standard AMP terminals such as tapered entry ramps to help eliminate bent wire strands and insulation support for stronger, more reliable connections. Serrated or dimpled wire barrels provide maximum contact and tensile strength after crimping, and color coded insulation with wire size stamped on the terminal tongue identifies the product and assists in proper terminal-wire match.

AMP Radiation Resistant/150°C Terminals are designed and engineered to successfully withstand extreme vibration, shock and structural stresses, and other conditions which can adversely affect the critical circuit requirements in complex equipment.

The matching AMP tooling precisely crimps all terminations. This uniformity increases reliability and also serves as a built-in quality control factor.

Technical Documents:

Instruction Sheets:

IS 1559	DAHT's for 26-10 AWG connectors
IS 1724	Crimping dies for 8-2/0 AWG connectors

For complete product information, order Catalog 82038

Products for Industrial & Commercial Applications

Dimensions are shown for reference purposes only.

Dimensions are in inches and millimeters unless otherwise specified. Values in brackets are metric equivalents.

Specifications subject to change.

Technical Support Center
1-800-522-6752
www.tycoelectronics.com

PIDG Terminal Style

Ring Tongue Terminals

Material and Finish:

Terminal Body—Copper per QQ-C-576 with tin plating per MIL-T-10727 or gold plating per MIL-G-45204 over nickel per QQ-N-290

Insulation Support Sleeve—Copper per QQ-C-576 with tin plating per MIL-T-10727

Insulation Sleeve—PVF_2, natural color

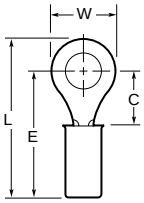

Wire Range AWG	Wire Range CMA	Tongue Thickness Max.	Wire Ins. Dia. Max.	Stripe Color Code	Stud Size	Dimensions C Min.	Dimensions W	Dimensions E Max.	Dimensions L Max.	Part Numbers Tin Plate Loose
26-24	202-509	**.029** 0.74	**.082** 2.09	Yellow	6 M3.5	**.243** 6.17	**.250** 6.35	**.664** 16.87	**.792** 20.12	53402-1
					8 M4	**.250** 6.35	**.281** 7.13	**.671** 17.05	**.814** 20.68	53403-1
22-16	509-3,250	**.033** 0.84	**.125** 3.18	Red	4	**.156** 3.96	**.218** 5.54	**.560** 14.23	**.672** 17.07	53405-1
					6 M3.5	**.156** 3.96	**.218** 5.54	**.560** 14.23	**.672** 17.07	53406-1
					6 M3.5	**.250** 6.35	**.250** 6.35	**.654** 16.62	**.782** 19.87	53407-1
					8 M4	**.281** 7.13	**.312** 7.91	**.685** 17.4	**.844** 21.44	53408-1
					10	**.281** 7.13	**.312** 7.92	**.685** 17.4	**.844** 21.44	53409-1
16-14	2,050-5,180	**.033** 0.84	**.150** 3.81	Blue	6 M3.5	**.171** 4.34	**.250** 6.35	**.575** 14.61	**.703** 17.86	53415-1
					6 M3.5	**.281** 7.13	**.312** 7.92	**.685** 17.4	**.844** 21.44	53416-1
					8 M4	**.281** 7.13	**.312** 7.92	**.685** 17.4	**.844** 21.44	53417-1
					10	**.281** 7.13	**.312** 7.92	**.685** 17.4	**.844** 21.44	53418-1
					1/4 M6	**.437** 11.09	**.469** 11.91	**.841** 21.37	**1.078** 27.39	53419-1
12-10	5,180-13,100	**.042** 1.07	**.230** 5.84	Yellow	6 M3.5	**.302** 7.67	**.375** 9.53	**.893** 22.69	**1.083** 27.51	53423-1*
					8 M4	**.302** 7.67	**.375** 9.53	**.893** 22.69	**1.083** 27.51	53424-1*
					10	**.302** 7.67	**.375** 9.53	**.893** 22.69	**1.083** 27.51	53425-1*
					1/4 M6	**.468** 11.88	**.531** 13.48	**1.054** 26.78	**1.322** 33.58	53426-1*
					5/16 M8	**.468** 11.88	**.531** 13.48	**1.054** 26.78	**1.322** 33.58	53427-1*

*Brazed body

Application Tooling


Short Handle Tool


Long Handle Tool


T-HEAD Tool


Heavy Head Tool

Wire Size Range AWG	Wire Size Range mm²	Hand Tools Style	Hand Tools Part Number	Pneumatic Tools Part Number	Pneumatic Tools Die Number	Pneumatic Tools Head Number
26-24 & 22-16	0.1-0.2 & 0.26-1.65	Short Handle	47386-2	69365	47806-2	—
		Long Handle	47386	46110-2	47806-2*	—
		T-HEAD Tool	59250	69011	—	47498
		T-HEAD Tool	59300	69012	—	46283
		—	—	69005	—	47516
		—	—	69010	—	46282
22-16	0.26-1.65	Long Handle	69151-1**	—	—	—
16-14	1.04-2.62	Short Handle	47387-2	69365	47807-1	—
		Long Handle	69152-1**	46110-2	47807-1*	—
		Long Handle	47387	69011	—	47499
		T-HEAD Tool	59250	69012	—	46285
		—	—	69005	—	47517
		—	—	69010	—	46284
12-10	2.62-6.64	Heavy Head	59239-4	69365	47808-6	—
		Heavy Head	69150-1**	69012	—	47500-1
		—	—	69010	—	47518-1

*Maximum tongue width of terminals for use with these dies is .469 [11.91] when used in tool **46110-2**. Flat tongues only.
**For wires with thin wall insulation.

For complete product information, order Catalog 82038

Products for Industrial & Commercial Applications

Dimensions are shown for reference purposes only.

Dimensions are in inches and millimeters unless otherwise specified. Values in brackets are metric equivalents.

Specifications subject to change.

Technical Support Center
1-800-522-6752
www.tycoelectronics.com

Product Facts

- **Pre-insulated PLASTI-GRIP solderless terminals and splices**
- **Designed specifically to answer the need for inexpensive, insulated electrical terminations**
- **Can be used in almost every type of commercial application**
- **Accommodate wire sizes from 22 AWG through 2/0 AWG**

The Crimp

- **Carefully engineered application tooling has been developed to ensure uniformly high quality terminations**
- **Tool and terminal have been designed as a team to promote ease and speed of application and at the same time to provide precise crimping pressure for every wire size**
- **The wire and the terminal barrel form a homogeneous mass of metal, providing a connection of maximum conductivity, tensile strength, and high resistance to corrosion**
- **The quality performance, the facility of installation and the inherent simplicity make them ideal for many industrial applications**

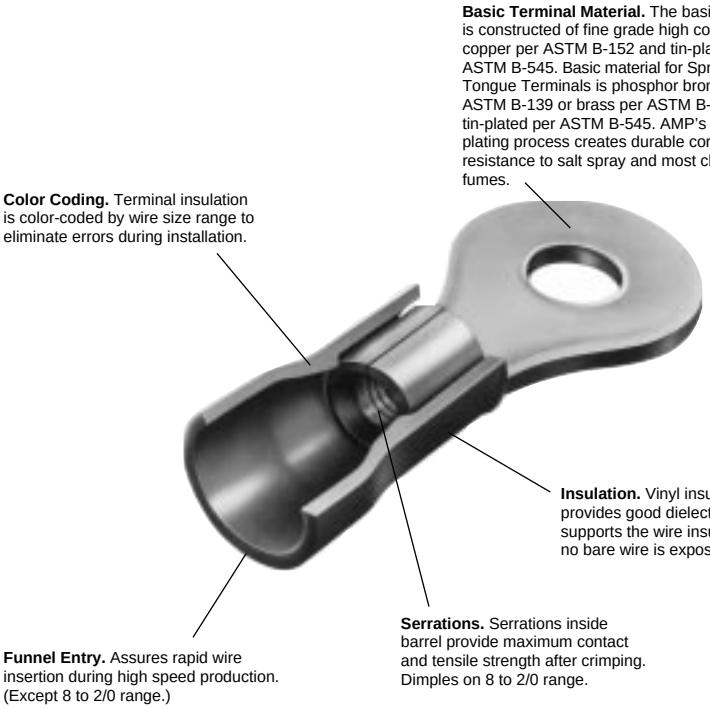

Temperature Rating: 90°C Max.

AMP PLASTI-GRIP Terminals and Splices (Use PLASTI-GRIP or PIDG Tooling)

AMP Wire Range	UL Listed	CSA LR 7189 Certified	8 thru 4/0 600V
	Except as noted with individual part number listing.		
22-16	Terminals, Butt & Parallel Splices 22-16 Solid or Stranded[1]	600 V Max. (1000 V Fixture or Sign) 90°C Max.	Recognized under the component program of Underwriters Laboratories Incorporated File No. E13288
16-14	Terminals, Butt & Parallel Splices 16-14 Solid or Stranded[1]		
12-10	Terminals, Butt & Parallel Splices 12-10 Solid or Stranded[1]		

Note: 22-16 terminals and splices are stamped 22-18 in accordance with MIL-T-7928.
[1]Stranded wire only using TETRA-CRIMP tooling.

For complete product information, order Catalog 82042

Ring Tongue Terminals

Material and Finish:

Insulation — Vinyl
Terminal Body — Copper per ASTM B-152
Plating — Tin per ASTM B-545

Related Product Data:

Application Tooling— page 7067

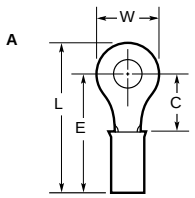

Wire Size Circular Mils [mm²]	Tongue Material Thickness Max.	Stud Size	Style	Dimensions W	C Min.	E Max.	L Max.	Terminal Insulation Color	Wire Insulation Diameter Max.	Part Numbers Loose Piece	Tape Mounted
22-16 509-3,260 [0.26-1.65]	**.033** 0.84	2 M2	A	**.218** 5.54	**.156** 3.96	**.572** 14.53	**.684** 17.37	Red	**.140** 3.56	34140*	2-34140-1
		4	A	**.218** 5.54	**.156** 3.96	**.572** 14.53	**.684** 17.37	Red	**.125** 3.18	32944*	—
				.218 5.54	**.156** 3.96	**.572** 14.53	**.684** 17.37	Red	**.140** 3.56	—	2-34141-1
				.281 7.14	**.250** 6.35	**.666** 16.92	**.809** 20.55	Red	**.140** 3.56	34143	2-34143-1
		6 M3.5	A	**.218** 5.54	**.156** 3.96	**.572** 14.53	**.684** 17.37	Red	**.125** 3.18	32945*	2-32945-1
				.218 5.54	**.156** 3.96	**.572** 14.53	**.684** 17.37	Red	**.140** 3.56	—	1-34142-1
				.281 7.14	**.250** 6.35	**.666** 16.92	**.809** 20.55	Red	**.125** 3.18	—	2-32947-1
				.281 7.14	**.250** 6.35	**.666** 16.92	**.809** 20.55	Red	**.140** 3.56	34144*	—
				.281 7.14	**.250** 6.35	**.666** 16.92	**.809** 20.55	Black	**.140** 3.56	—	2-326819-1
				.312 7.92	**.281** 7.14	**.697** 17.70	**.856** 21.74	Red	**.125** 3.18	—	2-32950-1
				.312 7.92	**.281** 7.14	**.697** 17.70	**.856** 21.74	Red	**.140** 3.56	34147*	—
		8 M4	A	**.281** 7.14	**.250** 6.35	**.666** 16.92	**.809** 20.55	Red	**.125** 3.18	32948*	2-32948-1
				.281 7.14	**.250** 6.35	**.666** 16.92	**.809** 20.55	Red	**.140** 3.56	34145*	2-34145-1
				.312 7.92	**.281** 7.14	**.697** 17.70	**.856** 21.74	Red	**.125** 3.18	32951*	—
				.312 7.92	**.281** 7.14	**.697** 17.70	**.856** 21.74	Red	**.140** 3.56	34148*	—
		10	A	**.281** 7.14	**.250** 6.35	**.666** 16.92	**.809** 20.55	Red	**.140** 3.56	34146*	2-34146-1
				.281 7.14	**.250** 6.35	**.666** 16.92	**.809** 20.55	Black	**.140** 3.56	—	2-34146-5
				.312 7.92	**.281** 7.14	**.697** 17.70	**.856** 21.74	Red	**.125** 3.18	32952*	2-32952-1
		1/4 M6	A	**.469** 11.91	**.437** 11.10	**.853** 21.67	**1.090** 27.69	Red	**.125** 3.18	—	2-32953-1
				.469 11.91	**.437** 11.10	**.853** 21.67	**1.090** 27.69	Red	**.140** 3.56	34150*	—
		5/16 M8	A	**.469** 11.91	**.437** 11.10	**.853** 21.67	**1.090** 27.69	Red	**.140** 3.56	34151*	2-34151-1
		3/8	A	**.531** 13.49	**.546** 13.87	**.962** 24.43	**1.230** 31.24	Red	**.140** 3.56	34152*	2-34152-2
16-14 2,050-5,180 [1.04-2.62]		4	A	**.250** 6.35	**.171** 4.34	**.587** 14.91	**.715** 18.16	Blue	**.170** 4.32	34157*	—
		6 M3.5	A	**.250** 6.35	**.171** 4.34	**.587** 14.91	**.715** 18.16	Blue	**.170** 4.32	—	2-34158-1
				.343 8.71	**.281** 7.14	**.697** 17.70	**.871** 22.12	Blue	**.145** 3.68	—	2-32958-1
				.343 8.71	**.281** 7.14	**.697** 17.70	**.871** 22.12	Blue	**.170** 4.32	34159*	2-34159-1

* Available in small packaging quantities.
Note: "C" dimension applies from edge of metal wire barrel to center of stud hole. (Styles A & E).

Ring Tongue Terminals

Material and Finish:

Insulation — Vinyl
Terminal Body — Copper per ASTM B-152
Plating — Tin per ASTM B-545

Related Product Data:

Application Tooling— page 7067

A

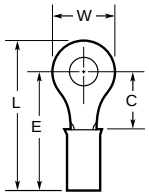

E

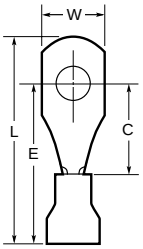

Wire Size Circular Mils [mm²]	Tongue Material Thickness Max.	Stud Size	Style	Dimensions W	C Min.	E Max.	L Max.	Terminal Insulation Color	Wire Insulation Diameter Max.	Part Numbers Loose Piece	Part Numbers Tape Mounted
16-14 2,050-5,180 [1.04-2.62]	**.033** 0.84	8 M4	A	**.312** 7.92	**.250** 6.35	**.666** 16.92	**.825** 20.96	Blue	**.170** 4.32	328527*	2-328527-1
				.343 8.71	**.281** 7.14	**.697** 17.70	**.871** 22.12	Blue	**.145** 3.68	32959*	2-32959-1
				.343 8.71	**.281** 7.14	**.697** 17.70	**.871** 22.12	Blue	**.170** 4.32	34160*	2-34160-1
		10	A	**.343** 8.71	**.281** 7.14	**.697** 17.70	**.871** 22.12	Blue	**.145** 3.68	—	2-32960-1
		1/4 M6	A	**.469** 11.91	**.437** 11.10	**.853** 21.67	**1.090** 27.69	Blue	**.145** 3.68	32961*	—
				.469 11.91	**.437** 11.10	**.853** 21.67	**1.090** 27.69	Blue	**.170** 4.32	34162*	—
		5/16 M8	A	**.469** 11.91	**.437** 11.10	**.853** 21.67	**1.090** 27.69	Blue	**.170** 4.32	34163*	2-34163-1
		3/8	A	**.531** 13.49	**.546** 13.87	**.962** 24.43	**1.248** 31.70	Blue	**.170** 4.32	34164*	2-34164-2
				.531 13.49	**.546** 13.87	**.962** 24.43	**1.248** 31.70	Black	**.170** 4.32	—	2-34164-4
16-14HD[1] 2,050-5,180 [1.04-2.62]	**.050** 1.27	10	A	**.343** 8.71	**.281** 7.14	**.872** 22.15	**1.046** 26.57	Yellow/Blk.	**.200** 5.08	—	2-34823-1[†]
				.343 8.71	**.281** 7.14	**.872** 22.15	**1.046** 26.57	Yellow/Blk.	**.250** 6.35	—	2-321518-1
		1/4 M6	A	**.500** 12.70	**.344** 8.74	**.935** 23.75	**1.188** 30.18	Yellow/Blk.	**.230** 5.84	35349	—
				.531 13.49	**.437** 11.10	**1.028** 26.11	**1.296** 32.92	Yellow/Blk.	**.200** 5.08	34824	—
		3/8	A	**.750** 19.05	**.625** 15.88	**1.216** 30.89	**1.594** 40.49	Yellow/Blk.	**.200** 5.08	34826	—
12-10 5,180-13,100 [2.62-6.64]	**.042** 1.07	6 M3.5	A	**.281** 7.14	**.219** 5.56	**.810** 20.57	**.953** 24.21	Yellow	**.250** 6.35	34852*	—
				.375 9.53	**.302** 7.67	**.893** 22.68	**1.098** 27.89	Yellow	**.230** 5.84	34168*	—
		10	A	**.312** 7.92	**.302** 7.67	**.953** 24.21	**1.111** 28.22	Yellow	**.300** 7.62	—	1-330518-2
				.375 9.53	**.302** 7.67	**.893** 22.68	**1.083** 27.51	Black	**.250** 6.35	—	2-328261-1
				.375 9.53	**.302** 7.67	**.893** 22.68	**1.098** 27.89	Yellow	**.250** 6.35	34854*	2-34854-1
		1/4 M6	E	**.400** 10.16	**.468** 11.89	**1.118** 28.40	**1.373** 34.87	Yellow	**.300** 7.62	—	55678-2
			A	**.500** 12.70	**.344** 8.74	**.994** 25.25	**1.247** 31.67	Black	**.300** 7.62	35492	—
				.531 13.49	**.468** 11.89	**1.059** 26.90	**1.327** 33.71	Yellow	**.250** 6.35	34855*	2-34855-1
		5/16 M8	A	**.531** 13.49	**.468** 11.89	**1.059** 26.90	**1.327** 33.71	Yellow	**.230** 5.84	34172*	2-34172-1
				.531 13.49	**.468** 11.89	**1.059** 26.90	**1.327** 33.71	Yellow	**.250** 6.35	34856*	2-34856-1
		3/8	A	**.593** 15.06	**.531** 13.49	**1.122** 28.50	**1.421** 36.09	Yellow	**.230** 5.84	—	2-34173-1
		1/2 M12	A	**.750** 19.05	**.625** 15.88	**1.216** 30.89	**1.594** 40.49	Yellow	**.250** 6.35	34837*	2-34837-4

[†] Not UL or CSA Approved or Listed.
* Available in small packaging quantities.
[1] Heavy Duty for extra mechanical strength.
Note: "C" dimension applies from edge of metal wire barrel to center of stud hole. (Styles A & E).

For complete product information, order Catalog 82042

Products for Industrial & Commercial Applications
Dimensions are shown for reference purposes only.
Dimensions are in inches and millimeters unless otherwise specified. Values in brackets are metric equivalents.
Specifications subject to change.
Technical Support Center 1-800-522-6752 www.tycoelectronics.com

Ring Tongue Terminals

Material and Finish:

Insulation — Vinyl
Terminal Body — Copper per ASTM B-152
Plating — Tin per ASTM B-545

Related Product Data:

Application Tooling — page 7068

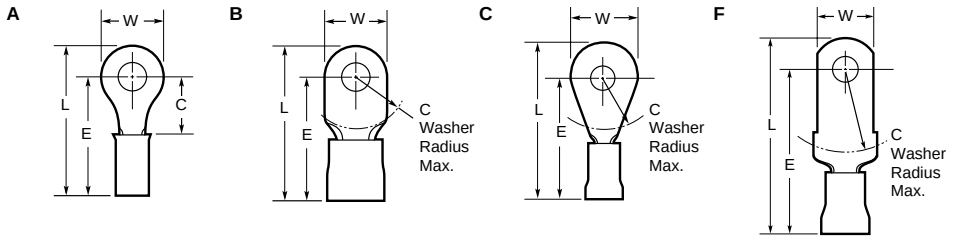

Wire Size Circular Mils [mm²]	Tongue Material Thickness Max.	Stud Size	Style	Dimensions W	C Min.	E Max.	L Max.	Terminal Insulation Color	Wire Insulation Diameter Max.	Part Numbers Loose Piece	Part Numbers Tape Mounted
8 13,100-20,800 [6.64-10.5]	**.043** 1.09	8 M4	C	**.478** 12.14	**.437** 11.10	**1.344** 34.14	**1.586** 40.28	Red	**.360** 9.14	52041	52041-6
		10	B	**.431** 10.95	**.437** 11.10	**1.338** 33.99	**1.556** 39.52	Red	**.360** 9.14	52263	52263-2
				.431 10.95	**.437** 11.10	**1.338** 33.99	**1.556** 39.52	Red	**.390** 9.91	—	52263-4
				.431 10.95	**.437** 11.10	**1.358** 34.49	**1.576** 40.03	Red	**.330** 8.38	52263-1	52263-3
		1/4 M6	C	**.431** 10.95	**.437** 11.10	**1.303** 33.10	**1.561** 39.65	Red	**.360** 9.14	—	55621-2
				.478 12.14	**.437** 11.10	**1.344** 34.14	**1.586** 40.28	Red	**.360** 9.14	52041-1	52041-7
				.478 12.14	**.437** 11.10	**1.358** 34.49	**1.600** 40.64	Red	**.330** 8.38	52041-3*	52041-9
		5/16 M8	C	**.587** 14.91	**.500** 12.70	**1.400** 35.56	**1.696** 43.08	Red	**.360** 9.14	52291*	52291-4
		3/8	C	**.587** 14.91	**.500** 12.70	**1.400** 35.56	**1.696** 43.08	Red	**.360** 9.14	52291-1*	52291-5
		1/2 M12	A	**.875** 22.23	**.625** 15.88	**1.420** 36.07	**1.860** 47.24	Red	**.330** 8.38	52262-1	—
6 20,800-33,100 [10.5-16.8]	**.048** 1.22	8 M4	C	**.500** 12.70	**.515** 13.08	**1.591** 40.41	**1.869** 47.47	Blue	**.360** 9.14	52042-2	—
		10	B	**.468** 11.89	**.421** 10.69	**1.482** 37.64	**1.719** 43.66	Blue	**.436** 11.07	52265*	52265-3
			C	**.500** 12.70	**.515** 13.08	**1.591** 40.41	**1.844** 46.84	Blue	**.436** 11.07	52042-4	—
		1/4 M6	F	**.398** 10.11	**.515** 13.08	**1.591** 40.41	**1.846** 46.89	Blue	**.450** 11.43	—	55679-2
			C	**.500** 12.70	**.515** 13.08	**1.591** 40.41	**1.844** 46.84	Blue	**.436** 11.07	52042-1	—
				.500 12.70	**.515** 13.08	**1.591** 40.41	**1.869** 47.47	Blue	**.360** 9.14	52042-3*	—
		5/16 M8	B	**.625** 15.88	**.515** 13.08	**1.591** 40.41	**1.906** 48.41	Blue	**.450** 11.43	52264*	52264-4
		3/8	B	**.625** 15.88	**.515** 13.08	**1.591** 40.41	**1.906** 48.41	Blue	**.450** 11.43	52264-1*	52264-5
		1/2 M12	C	**.815** 20.70	**.515** 13.08	**1.441** 36.60	**1.851** 47.02	Blue	**.436** 11.07	52350*	—
4 33,100-52,600 [16.8-26.7]	**.051** 1.30	10	B	**.546** 13.87	**.531** 13.49	**1.672** 42.47	**1.948** 49.48	Yellow	**.450** 11.43	52043-2	—
		1/4 M6	B	**.391** 9.93	**.531** 13.49	**1.672** 42.47	**1.927** 48.95	Yellow	**.450** 11.43	—	55680-2
				.546 13.87	**.531** 13.49	**1.672** 42.47	**1.948** 49.48	Yellow	**.450** 11.43	52043-3*	—
				.546 13.87	**.531** 13.49	**1.672** 42.47	**1.948** 49.48	Yellow	**.515** 13.08	52043-1	—
		5/16 M8	B	**.679** 17.25	**.531** 13.49	**1.672** 42.47	**2.014** 51.16	Yellow	**.450** 11.43	52266-3	—
		3/8	B	**.679** 17.25	**.531** 13.49	**1.672** 42.47	**2.014** 51.16	Yellow	**.450** 11.43	52266-4*	—
				.679 17.25	**.531** 13.49	**1.672** 42.47	**2.014** 51.16	Yellow	**.515** 13.08	52266-1	—

* Available in small packaging quantities.

For complete product information, order Catalog 82042

Products for Industrial & Commercial Applications
Dimensions are shown for reference purposes only.
Dimensions are in inches and millimeters unless otherwise specified. Values in brackets are metric equivalents.
Specifications subject to change.
Technical Support Center 1-800-522-6752 www.tycoelectronics.com

Ring Tongue Terminals

Material and Finish:

Insulation — Vinyl
Terminal Body — Copper per ASTM B-152
Plating — Tin per ASTM B-545

Related Product Data:

Application Tooling— page 7068

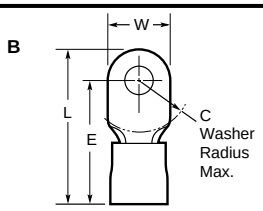

Wire Size Circular Mils [mm²]	Tongue Material Thickness Max.	Stud Size	Style	Dimensions W	Dimensions C Min.	Dimensions E Max.	Dimensions L Max.	Terminal Insulation Color	Wire Insulation Diameter Max.	Part Numbers Loose Piece
2 52,600-83,700 [26.7-42.4]	**.060** 1.52	1/4 M6	B	**.675** 17.15	**.578** 14.68	**1.731** 43.97	**2.071** 52.60	Red	**.560** 14.22	52267-1
				.675 17.15	**.578** 14.68	**1.731** 43.97	**2.071** 52.60	Red	**.632** 16.05	52267
		5/16 M8	B	**.711** 18.06	**.578** 14.68	**1.731** 43.97	**2.089** 53.06	Red	**.632** 16.05	52044-1
		3/8	B	**.711** 18.06	**.578** 14.68	**1.731** 43.97	**2.089** 53.06	Red	**.632** 16.05	52044-2
1/0 83,700-119,500 [42.4-60.6]	**.073** 1.85	5/16 M8	B	**.807** 20.50	**.625** 15.88	**2.041** 51.84	**2.447** 62.15	Blue	**.684** 17.37	52045-1
		3/8	B	**.807** 20.50	**.625** 15.88	**2.041** 51.84	**2.447** 62.15	Blue	**.665** 16.89	52045-5

Ring Tongue 90° Bend Terminals

Material and Finish:

Insulation — Vinyl
Terminal Body — Copper per ASTM B-152
Plating — Tin per ASTM B-545

Related Product Data:

Application Tooling— page 7068

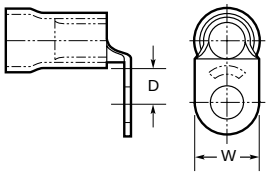

Wire Size Circular Mils [mm²]	Tongue Material Thickness Max.	Stud Size	Dimensions W	Dimensions D Min.	Terminal Insulation Color	Wire Insulation Diameter Max.	Part Numbers Loose Piece
8 13,100-20,800 [6.64-10.5]	**.043** 1.09	10	**.431** 10.95	**.311** 7.90	Red	**.360** 9.14	55654-1
6 20,800-33,100 [10.5-16.8]	**.048** 1.22	10	**.500** 12.70	**.310** 7.87	Blue	**.436** 11.07	54753-1
		1/4 M6	**.500** 12.70	**.379** 9.63	Blue	**.436** 11.07	54754-1

Spade Tongue Terminals

Material and Finish:

Insulation — Vinyl
Terminal Body — Copper per ASTM B-152
Plating — Tin per ASTM B-545

Related Product Data:

Application Tooling— page 7067

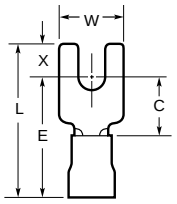

Wire Size Circular Mils [mm²]	Tongue Material Thickness Max.	Stud Size	Dimensions W	C Min.	E Max.	L Max.	X	Terminal Insulation Color	Wire Insulation Diameter Max.	Part Numbers Loose Piece	Tape Mounted
22-16 509-3,260 [0.26-1.65]	**.033** 0.84	6 M3.5	**.250** 6.35	**.312** 7.92	**.728** 18.49	**.858** 21.79	**.125** 3.18	Red	**.140** 3.56	327043*	2-327043-1
			.297 7.54	**.203** 5.16	**.619** 15.72	**.765** 19.43	**.141** 3.58	Red	**.125** 3.18	327735*	2-327735-1
			.297 7.54	**.203** 5.16	**.619** 15.72	**.765** 19.43	**.141** 3.58	Red	**.140** 3.56	—	2-320665-1
		8 M4	**.375** 9.53	**.312** 7.92	**.728** 18.49	**.920** 23.37	**.187** 4.75	Red	**.120** 3.18	32981	—
			.375 9.53	**.312** 7.92	**.728** 18.49	**.920** 23.37	**.187** 4.75	Red	**.140** 3.56	34155*	2-34155-1
		10	**.375** 9.53	**.312** 7.92	**.728** 18.49	**.920** 23.37	**.187** 4.75	Red	**.140** 3.56	34156*	2-34156-1
16-14 2,050-5,180 [1.04-2.62]	**.033** 0.84	6 M3.5	**.297** 7.54	**.203** 5.16	**.619** 15.72	**.765** 19.43	**.141** 3.58	Blue	**.145** 3.68	322994*	2-322994-1
		10	**.385** 9.78	**.312** 7.92	**.728** 18.49	**.920** 23.37	**.187** 4.75	Blue	**.170** 4.32	—	2-34167-1
12-10 5,180-13,100 [2.62-6.64]	**.042** 1.07	10	**.406** 10.31	**.296** 7.52	**.887** 22.53	**1.095** 27.81	**.203** 5.16	Yellow	**.230** 5.84	—	2-34176-1

* Available in small packaging quantities.
Note: "C" dimension applies from edge of metal wire barrel to center of stud hole.

Flanged Spade Tongue Terminals

Material and Finish:

Insulation — Vinyl
Terminal Body — Copper per ASTM B-152
Plating — Tin per ASTM B-545

Related Product Data:

Application Tooling— page 7067

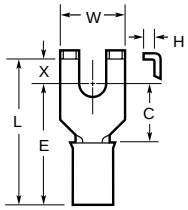

Wire Size Circular Mils [mm²]	Tongue Material Thickness Max.	Stud Size	Dimensions W	C Min.	E Max.	L Max.	X	H Min.	Terminal Insulation Color	Wire Insulation Diameter Max.	Part Numbers Loose Piece	Tape Mounted
22-16 509-3,260 [0.26-1.65]	**.033** 0.84	6 M3.5	**.296** 7.52	**.203** 5.16	**.619** 15.72	**.749** 19.02	**.125** 3.18	**.045** 1.14	Red	**.140** 3.56	322249*	1-322249-1
		8 M4	**.296** 7.52	**.203** 5.16	**.619** 15.72	**.749** 19.02	**.125** 3.18	**.045** 1.14	Red	**.140** 3.56	1-322249-0	1-322249-9
			.416 10.57	**.250** 6.35	**.666** 16.92	**.842** 21.39	**.171** 4.34	**.062** 1.57	Red	**.140** 3.56	324169*	—
		10	**.296** 7.52	**.203** 5.16	**.619** 15.72	**.749** 19.02	**.125** 3.18	**.045** 1.14	Red	**.140** 3.56	328516*	2-328516-1
16-14 2,050-5,180 [1.04-2.62]	**.033** 0.84	6 M3.5	**.294** 7.47	**.203** 5.16	**.619** 15.72	**.749** 19.02	**.125** 3.18	**.047** 1.19	Blue	**.170** 4.32	—	2-324165-1
		8 M4	**.294** 7.47	**.203** 5.16	**.619** 15.72	**.749** 19.02	**.125** 3.18	**.047** 1.19	Blue	**.170** 4.32	—	53874-2
12-10 5,180-13,100 [2.62-6.64]	**.042** 1.07	6 M3.5	**.296** 7.52	**.250** 6.35	**.841** 21.36	**1.017** 25.83	**.171** 4.34	**.052** 1.32	Yellow	**.230** 5.84	324581*	1-324581-1
		8 M4	**.416** 10.57	**.250** 6.35	**.841** 21.36	**1.017** 25.83	**.171** 4.34	**.052** 1.32	Yellow	**.230** 5.84	—	1-324172-0
		10	**.416** 10.57	**.250** 6.35	**.841** 21.36	**1.017** 25.83	**.171** 4.34	**.052** 1.32	Yellow	**.250** 6.35	—	52856-1

* Available in small packaging quantities.
Note: "C" dimension applies from edge of metal wire barrel to center of stud hole.

For complete product information, order Catalog 82042

Products for Industrial & Commercial Applications
Dimensions are shown for reference purposes only.
Dimensions are in inches and millimeters unless otherwise specified. Values in brackets are metric equivalents.
Specifications subject to change.
Technical Support Center 1-800-522-6752 www.tycoelectronics.com

Short Spring Spade Tongue Terminals

Material and Finish:

Insulation — Vinyl

Terminal Body — Phosphor Bronze per ASTM B-139 for wire sizes 24 to 14 Brass per ASTM B-36 for wire sizes 12 to 10

Plating — Tin per ASTM B-545 except where noted

Related Product Data:

Application Tooling— page 7067

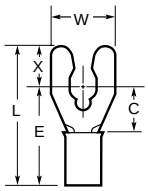

Wire Size Circular Mils [mm²]	Tongue Material Thickness Max.	Stud Size	Dimensions W	C Min.	E Max.	L Max.	X	Terminal Insulation Color	Wire Insulation Diameter Max.	Part Numbers Loose Piece	Part Numbers Tape Mounted
24-20 320-1,290 [0.16-0.65]	**.025** 0.64	4	**.203** 5.16	**.219** 5.56	**.624** 15.85	**.744** 18.90	**.115** 2.92	White	**.125** 3.18	—	53829-2
22-16 509-3,260 [0.26-1.65]	**.033** 0.84	4	**.203** 5.16	**.250** 6.35	**.666** 16.92	**.811** 20.60	**.140** 3.56	Red	**.140** 3.56	52947*	52947-1
		6 M3.5	**.234** 5.94	**.250** 6.35	**.666** 16.92	**.811** 20.60	**.140** 3.56	Red	**.140** 3.56	53240-1*	53240-2
			.250 6.35	**.250** 6.35	**.666** 16.92	**.811** 20.60	**.140** 3.56	Red	**.140** 3.56	52949*	52949-1
			.250 6.35	**.250** 6.35	**.715** 18.16	**.860** 21.84	**.140** 3.56	Red	**.200** 5.08	—	52949-3
		8 M4	**.244** 6.20	**.281** 7.14	**.697** 17.70	**.872** 22.15	**.170** 4.32	Red	**.140** 3.56	53241-1	53241-2
			.375 9.53	**.281** 7.14	**.697** 17.70	**.872** 22.15	**.170** 4.32	Red	**.140** 3.56	52950*	52950-1
		10	**.294** 7.47	**.281** 7.14	**.697** 17.70	**.920** 23.37	**.218** 5.54	Red	**.140** 3.56	53242-1*	53242-2
			.294 7.47	**.281** 7.14	**.746** 18.95	**.969** 24.61	**.218** 5.54	Red	**.200** 5.08	—	53242-6
			.406 10.31	**.281** 7.14	**.697** 17.70	**.920** 23.37	**.218** 5.54	Red	**.140** 3.56	—	52951-1
			.406 10.31	**.281** 7.14	**.746** 18.95	**.969** 24.61	**.218** 5.54	Red	**.200** 5.08	—	52951-3
16-14 2,050-5,180 [1.04-2.62]	**.033** 0.84	6 M3.5	**.250** 6.35	**.250** 6.35	**.666** 16.92	**.811** 20.60	**.140** 3.56	Blue	**.170** 4.32	52955*	52955-1
			.250 6.35	**.250** 6.35	**.715** 18.16	**.860** 21.84	**.140** 3.56	Blue	**.250** 6.35	52955-2	52955-3
		8 M4	**.244** 6.20	**.281** 7.14	**.697** 17.70	**.872** 22.15	**.170** 4.32	Blue	**.170** 4.32	53244-1*	53244-2
			.375 9.53	**.281** 7.14	**.697** 17.70	**.872** 22.15	**.170** 4.32	Blue	**.170** 4.32	52956*	52956-1
		10	**.294** 7.47	**.281** 7.14	**.697** 17.70	**.920** 23.37	**.218** 5.54	Blue	**.170** 4.32	53245-1	53245-2
			.294 7.47	**.281** 7.14	**.746** 18.95	**.969** 24.61	**.218** 5.54	Blue	**.250** 6.35	—	53245-6
			.406 10.31	**.281** 7.14	**.697** 17.70	**.920** 23.37	**.218** 5.54	Blue	**.170** 4.32	52957*	52957-1
			.406 10.31	**.281** 7.14	**.746** 18.95	**.969** 24.61	**.218** 5.54	Blue	**.250** 6.35	—	52957-3
12-10 5,180-13,100 [2.62-6.64]	**.042** 1.07	6 M3.5	**.250** 6.35	**.174** 4.42	**.775** 19.69	**.959** 24.36	**.179** 4.55	Yellow	**.200** 5.08	52961*	52961-1
			.250 6.35	**.174** 4.42	**.775** 19.69	**.959** 24.36	**.179** 4.55	Yellow	**.250** 6.35	53246-1*	—
		8 M4	**.312** 7.92	**.276** 7.01	**.877** 22.28	**1.052** 26.72	**.170** 4.32	Yellow	**.250** 6.35	53247-1*	53247-2
			.375 9.53	**.276** 7.01	**.877** 22.28	**1.052** 26.72	**.170** 4.32	Yellow	**.200** 5.08	52962*	52962-1
		10	**.406** 10.31	**.276** 7.01	**.877** 22.28	**1.100** 27.94	**.218** 5.54	Yellow	**.200** 5.08	52963	52963-1
			.406 10.31	**.276** 7.01	**.936** 23.77	**1.159** 29.44	**.218** 5.54	Yellow	**.300** 7.62	—	52963-5

* Available in small packaging quantities.
Note: "C" dimension applies from edge of metal wire barrel to center of stud hole.

Long Spring Spade Tongue Terminals

Material and Finish:

Insulation — Vinyl

Terminal Body — Phosphor Bronze per ASTM B-139 for wire sizes 22 to 14 Brass per ASTM B-36 for wire sizes 12 to 10

Plating — Tin per ASTM B-545

Related Product Data:

Application Tooling— page 7067

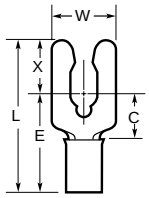

Wire Size Circular Mils [mm²]	Tongue Material Thickness Max.	Stud Size	Dimensions W	C Min.	E Max.	L Max.	X	Terminal Insulation Color	Wire Insulation Diameter Max.	Part Numbers Loose Piece	Tape Mounted
22-16 509-3,260 [0.26-1.65]	**.033** 0.84	6 M3.5	**.250** 6.35	**.238** 6.05	**.664** 16.87	**.945** 24.00	**.276** 7.01	Red	**.140** 3.56	52453*	52453-1
		8 M4	**.281** 7.14	**.270** 6.86	**.696** 17.68	**.991** 25.17	**.290** 7.37	Red	**.140** 3.56	52454*	52454-1
16-14 2,050-5,180 [1.04-2.62]	**.033** 0.84	6 M3.5	**.250** 6.35	**.238** 6.05	**.664** 16.87	**.945** 24.00	**.276** 7.01	Blue	**.170** 4.32	52463*	52463-1
		8 M4	**.281** 7.14	**.270** 6.86	**.696** 17.68	**.991** 25.17	**.290** 7.37	Blue	**.170** 4.32	—	52464-1
		10	**.343** 8.71	**.283** 7.19	**.709** 18.01	**1.017** 25.83	**.303** 7.70	Blue	**.170** 4.32	52465*	—

* Available in small packaging quantities.
Note: "C" dimension applies from edge of metal wire barrel to center of stud hole.

Multiple Stud Terminals

Material and Finish:

Insulation — Vinyl

Terminal Body — Copper per ASTM B-152

Plating — Tin per ASTM B-545

Related Product Data:

Application Tooling— page 7067

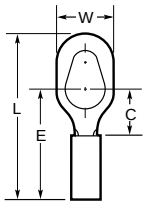

Wire Size Circular Mils [mm²]	Tongue Material Thickness Max.	Stud Size	Dimensions W	C Min.	E Max.	L Max.	Terminal Insulation Color	Wire Insulation Diameter Max.	Part Numbers Loose Piece	Tape Mounted
22-16 509-3,260 [0.26-1.65]	**.033** 0.84	6-8-10	**.325** 8.26	**.271** 6.88	**.691** 17.55	**.969** 24.61	Red	**.125** 3.18	54774-1	54774-2

Note: "C" dimension applies from edge of metal wire barrel to center of stud hole.

Butt Splices

Material and Finish:

Insulation — Vinyl
Splice Body — Copper per ASTM B-152
Plating — Tin per ASTM B-545

Related Product Data:

Application Tooling— page 7067

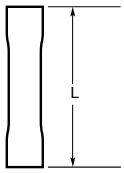

Wire Size Circular Mils[1] [mm²]	Dimension L Max.	Splice Insulation Color	Wire Insulation Diameter Max.	Part Numbers	
				Loose Piece	Tape Mounted
26-22 202-810 [0.10-0.41]	**.620** 15.75	Yellow	**.080** 2.03	321026*†	—
22-16[2] 509-3,260 [0.26-1.65]	**1.065** 27.05	Red	**.120** 3.05	—	2-34067-1
	1.065 27.05	Red	**.170** 4.32	34243*	—
	1.076 27.33	Natural w/ Red Letters	**.120** 3.05	324138*	—
	1.076 27.33	Natural w/ Red Stripes	**.140** 3.56	55792-1*	—
	1.065 27.05	Red	**.083 x .171** 2.11 x 4.34	34203[3]*	—
16-14 2,050-5,180 [1.04-2.62]	**1.065** 27.05	Blue	**.140** 3.56	34068*	—
	1.065 27.05	Natural w/ Blue Letters	**.140** 3.56	328427*	—
	1.065 27.05	Blue	**.170** 4.32	—	2-34071-1
	1.065 27.05	Natural w/ Blue Stripes	**.170** 4.32	55785-1*	55785-2
	1.065 27.05	Blue	**.215** 5.46	35244*	—
	1.105 28.07	Blue	**.170** 4.32	—	2-34071-3[2]
	1.065 27.05	Blue	**.135 x .245** 3.43 x 6.22	34204[3]*	—
12-10 5,180-13,100 [2.62-6.64]	**1.160** 29.46	Yellow	**.200** 5.08	34069	—
	1.160 29.46	Yellow	**.230** 5.84	—	2-34072-2
	1.160 29.46	Yellow	**.250** 6.35	34945*	—
	1.200 30.48	Yellow	**.250** 6.35	—	2-34945-2[2]

† Not UL or CSA Approved or Listed.
* Available in small packaging quantities.
[1] When using two or more wires in either end of a butt splice, the combined cross sectional area must be within the (CMA) circular mil range listed. (Not UL or CSA approved with use of multiple wires.)
[2] Funnel entry.

Parallel Splices

Material and Finish:

Insulation — Vinyl

Splice Body — Copper per ASTM B-152

Plating — Tin per ASTM B-545

Related Product Data:

Application Tooling— page 7067

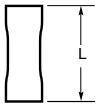

Wire Size Circular Mils[1] [mm²]	Dimension L Max.	Splice Insulation Color	Wire Insulation Diameter Max.	Part Numbers Loose Piece
22-16 509-3,260 [0.26-1.65]	**.760** 19.30	Red	**.120** 3.05	34131*
16-14 2,050-5,180 [1.04-2.62]	**.760** 19.30	Blue	**.170** 4.32	34134*
12-10 5,180-13,100 [2.62-6.64]	**.843** 21.41	Yellow	**.200** 5.08	34135
	.870 22.10	Yellow	**.230** 5.84	34136*

* Available in small packaging quantities.

[1] When using two or more wires in a parallel splice, the combined cross sectional area must be within the (CMA) circular mil area listed.

Shur-Plug (.156 Series)

Material and Finish: (.156 Series)

Insulation — Vinyl

Terminal Body — Copper per ASTM B-152

Plating — Tin per ASTM B-545

Related Product Data:

Application Tooling— page 7067

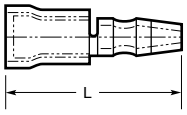

.156 Series

Wire Size Circular Mils [mm²]	Tongue Material Thickness Max.	Series	Dimension L Max.	Terminal Insulation Color	Wire Insulation Diameter Max.	Part Numbers Loose Piece
16-14 2,050-5,180 [1.04-2.62]	**.033** 0.84	.156	**.800** 20.32	Blue	**.170** 4.32	324227*†

† Not UL or CSA Approved or Listed.

* Available in small packaging quantities.

Wire Pins

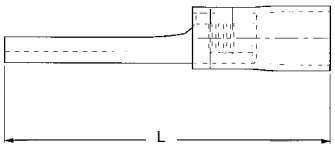

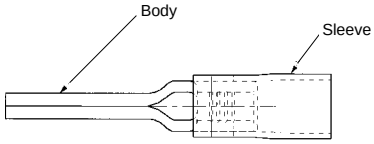

Wire Size Circular Mils [mm²]	Tab	Dimensions L Max.	Terminal Insulation Color	Wire Insulation Diameter Max.	Part Numbers
22-16 509-3,260 [0.26-1.65]	**.071** 1.80	**.906** 23.00	Red	**.138** 3.50	165167
16-14 2,050-5,180 [1.04-2.62]	**.070** 1.78	**.933** 23.70	Blue	**.195** 4.95	165171-0
12-10 5,180-13,100 [2.62-6.64]	**.102** 25.4	**1.147** 29.13	Yellow	**.250** 6.35	165085

For complete product information, order Catalog 82042

Products for Industrial & Commercial Applications
Dimensions are shown for reference purposes only.
Dimensions are in inches and millimeters unless otherwise specified. Values in brackets are metric equivalents.
Specifications subject to change.
Technical Support Center 1-800-522-6752 www.tycoelectronics.com

Product Facts

- **Designed to accommodate wire gauges 8 AWG through 4/0 AWG**
- **The first large wire terminal to feature vinyl insulation bonded to the terminal sleeve**
- **Terminals for wire sizes 8 AWG through 4/0 AWG meet the requirements of MIL-T-7928, Type II, Class 2**
- **Precision-engineered terminal offering the heavy-duty wire user uniformly high quality connections with permanent insulation support and complete protection against flash over**
- **Applied in a single effortless operation with the AMP DYNA-CRIMP tool**

Why Bonding?

- **Terminal insulators must withstand intense crimping pressures necessary for today's high wire-to-terminal contact requirements**
- **Bonded insulation transmits this pressure evenly to the center of the crimp area**
- **A positive bond assures uniform insulation thickness, maintains proper dielectric and tensile values and controls the extrusion of plastic under the crimping dies in the finished connection**

The Crimp

- **Because both wire and terminal are confined over a greater area during the crimp, a homogeneous mass is achieved**
- **Crimp is applied gradually to encourage full movement of the wire with minimum extrusion**
- **Compare this AMP method of applying pre-insulated solderless terminals to large gauge wires with the cumbersome mechanical fitting, brazing and manual insulating techniques still used in many plants**

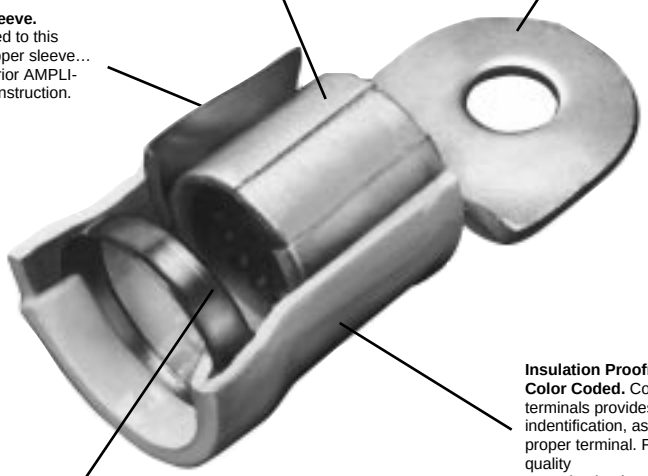

Barrel with Brazed Seam, Dimpled Inner Surface. Each AMPLI-BOND terminal body is individually brazed for ruggedness and deformation control during the crimping operation. Dimpling on inner barrel surface provides more contact area of wire to terminal and additional tensile strength.

Basic Terminal Material. The basic terminal is constructed of fine grade high conductivity copper per ASTM B-152 and tin-plated per ASTM B-545. AMP's special plating process creates durable corrosion resistance to salt spray and most chemical fumes.

Inner Bonding Sleeve. Insulation is bonded to this (ASTM B-152) copper sleeve… the secret of superior AMPLI-BOND terminal construction.

Insulation Proofmarked and Color Coded. Color coding of terminals provides rapid indentification, assures selection of proper terminal. For additional quality control, crimping die embosses wire size number on insulation.

Vinyl insulation extends minimum distance beyond terminal barrel to prevent exposure of conductor during stress and vibration.

Fully Protected Rear Insulation Support Ring. Separate metal ring provides insulation support to dampen vibration and prevent sharp bends on conductor. Steel (ASTM A-109, Tin plated per ASTM B-545).

Temperature Rating: 105°C Max.

For complete product information, order Catalog 82042

Products for Industrial & Commercial Applications

Dimensions are shown for reference purposes only.

Dimensions are in inches and millimeters unless otherwise specified. Values in brackets are metric equivalents.

Specifications subject to change.

Technical Support Center
1-800-522-6752
www.tycoelectronics.com

Ring Tongue Terminals

Material and Finish:

Insulation — Vinyl
Terminal Body — Copper per ASTM B-152
Insulation Support Ring — Steel per ASTM A-109

Plating — Tin per ASTM B-545 except where noted.

Related Product Data:

Application Tooling — page 7068

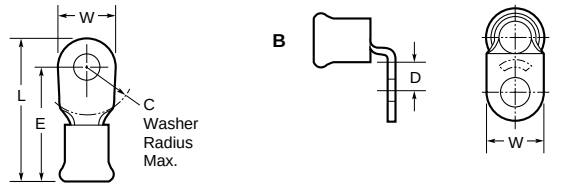

Wire Size Circular Mils [mm²]	Tongue Material Thickness Max.	Stud Size	Style	Dimensions W	C	E Max.	L Max.	D Min.	Terminal Insulation Color	Wire Insulation Diameter Max.	Part Numbers Loose Piece	Part Numbers Tape Mounted
8 13,100-20,800 [6.64-10.5]	**.043** 1.09	8 M4	A	**.375** 9.53	**.544** 13.82	**1.359** 34.52	**1.549** 39.34	—	Red	**.298** 7.57	330600	—
			A	**.478** 12.14	**.437** 11.10	**1.344** 34.14	**1.586** 40.28	—	Red	**.298** 7.57	322047	—
		10	A	**.375** 9.53	**.437** 11.10	**1.344** 34.14	**1.579** 40.11	—	Red	**.298** 7.57	323974	—
				.431 10.95	**.437** 11.10	**1.344** 34.14	**1.562** 39.67	—	Red	**.298** 7.57	322128	2-322128-2
				.431 10.95	**.437** 11.10	**1.344** 34.14	**1.562** 39.67	—	Red	**.377** 9.58	322154	—
				.478 12.14	**.437** 11.10	**1.344** 34.14	**1.586** 40.28	—	Red	**.298** 7.57	322048	—
			B	**.431** 10.95	—	—	—	**.318** 8.08	Red	**.298** 7.57	322880	—
		1/4 M6	A	**.478** 12.14	**.437** 11.10	**1.344** 34.14	**1.586** 40.28	—	Red	**.298** 7.57	322049	2-322049-5
				.478 12.14	**.437** 11.10	**1.344** 34.14	**1.586** 40.28	—	Red	**.377** 9.58	327268	—
			B	**.587** 14.91	—	—	—	**.381** 9.68	Red	**.298** 7.57	323869	—
		5/16 M8	A	**.587** 14.91	**.500** 12.70	**1.406** 35.71	**1.702** 43.23	—	Red	**.298** 7.57	322003	—
		3/8	A	**.587** 14.91	**.500** 12.70	**1.406** 35.71	**1.702** 43.23	—	Red	**.298** 7.57	322004	—
6 20,800-33,100 [10.5-16.8]	**.048** 1.22	10	A	**.468** 11.89	**.421** 10.69	**1.490** 37.85	**1.727** 43.87	—	Blue	**.377** 9.58	322153	—
				.500 12.70	**.515** 13.08	**1.599** 40.61	**1.852** 47.04	—	Blue	**.377** 9.58	322050	—
		1/4 M6	A	**.500** 12.70	**.515** 13.08	**1.599** 40.61	**1.852** 47.04	—	Blue	**.377** 9.58	322051	—
			B	**.500** 12.70	—	—	—	**.379** 9.63	Blue	**.377** 9.58	322888	—
		5/16 M8	A	**.625** 15.88	**.515** 13.08	**1.599** 40.61	**1.914** 48.62	—	Blue	**.377** 9.58	322006*	—
		3/8	A	**.625** 15.88	**.515** 13.08	**1.599** 40.61	**1.914** 48.62	—	Blue	**.377** 9.58	322007	—

* Available in small packaging quantities.

Products for Industrial & Commercial Applications
Dimensions are shown for reference purposes only.
Dimensions are in inches and millimeters unless otherwise specified. Values in brackets are metric equivalents.
Specifications subject to change.
Technical Support Center 1-800-522-6752 www.tycoelectronics.com

Ring Tongue Terminals

Material and Finish:

Insulation — Vinyl
Terminal Body — Copper per ASTM B-152
Insulation Support Ring — Steel per ASTM A-109

Plating — Tin per ASTM B-545 except where noted.

Related Product Data:

Application Tooling— page 7068

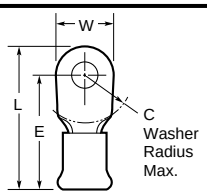

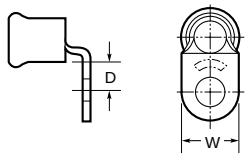

Wire Size Circular Mils [mm²]	Tongue Material Thickness Max.	Stud Size	Style	Dimensions W	C	E Max.	L Max.	D Min.	Terminal Insulation Color	Wire Insulation Diameter Max.	Part Numbers Loose Piece
4 33,100-52,600 [16.8-26.7]	**.051** 1.30	10	A	**.546** 13.87	**.531** 13.49	**1.632** 41.45	**1.908** 48.46	—	Yellow	**.436** 11.07	322052
		1/4 M6	A	**.546** 13.87	**.531** 13.49	**1.632** 41.45	**1.908** 48.46	—	Yellow	**.436** 11.07	322053
				.679 17.25	**.531** 13.49	**1.632** 41.45	**1.974** 50.14	—	Yellow	**.436** 11.07	321671
			B	**.546** 13.87	—	—	—	**.377** 9.58	Yellow	**.436** 11.07	322894
		5/16 M8	A	**.679** 17.25	**.531** 13.49	**1.632** 41.45	**1.974** 50.14	—	Yellow	**.436** 11.07	322010
		3/8	A	**.679** 17.25	**.531** 13.49	**1.632** 41.45	**1.974** 50.14	—	Yellow	**.436** 11.07	322011
2 52,600-83,700 [26.7-42.4]	**.060** 1.52	1/4 M6	A	**.675** 17.15	**.578** 14.68	**1.710** 43.43	**2.050** 52.07	—	Red	**.505** 12.83	322125
				.675 17.15	**.578** 14.68	**1.772** 45.01	**2.112** 53.64	—	Red	**.632** 16.05	322157
		5/16 M8	A	**.711** 18.06	**.578** 14.68	**1.710** 43.43	**2.068** 52.53	—	Red	**.505** 12.83	322074
		3/8	B	**.711** 18.06	—	—	—	**.465** 11.81	Red	**.505** 12.83	322902
1/0 83,700-119,500 [42.4-60.6]	**.073** 1.85	3/8	A	**.807** 20.50	**.625** 15.88	**2.063** 52.40	**2.469** 62.71	—	Blue	**.632** 16.05	322087
		1/2 M12	A	**.875** 22.23	**.625** 15.88	**2.063** 52.40	**2.501** 63.53	—	Blue	**.632** 16.05	321677
2/0 119,500-150,500 [60.6-76.3]	**.083** 2.11	3/8	A	**.926** 23.52	**.625** 15.88	**2.084** 52.93	**2.540** 64.52	—	Yellow	**.684** 17.37	322090

* Available in small packaging quantities.

Product Facts

- **Designed to provide insulated terminals and splices for large wire sizes, many of which are used in airborne and ground support applications**
- **Tested under the procedures stipulated by MIL Spec. MIL-T-7928, they meet and exceed all requirements**
- **Designed and engineered to successfully withstand extreme vibration, shock and structural stresses, elevated temperatures and other conditions which can adversely affect the critical circuit requirements in complex air and space flight equipment**
- **The use of matching AMP tooling assures precision crimping which makes all terminations precisely identical**
- **This uniformity assures maximum reliability and, coupled with tool die marks on the barrel indicating the wire size and color coding of the insulation sleeve, also serves as a built-in quality control factor**
- **Pre-insulated with color coded nylon which also acts as insulation support**
- **Wire size range of terminals is 8 AWG through 4/0 AWG**

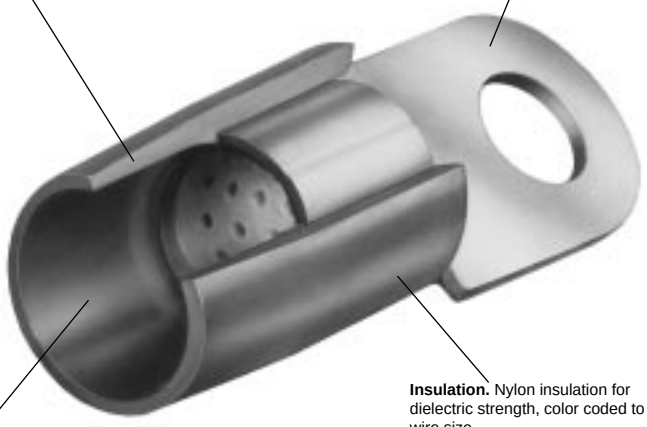

Temperature Rating: 105°C Max.

7 Terminals and Splices

For complete product information, order Catalog 82042

Products for Industrial & Commercial Applications
Dimensions are shown for reference purposes only.
Dimensions are in inches and millimeters unless otherwise specified. Values in brackets are metric equivalents.
Specifications subject to change.
Technical Support Center
1-800-522-6752
www.tycoelectronics.com

Ring Tongue Terminals

Material and Finish:

Insulation — Nylon
Terminal Body — Copper per ASTM B-152
Plating — Tin per ASTM B-545

Related Product Data:

Application Tooling— page 7068

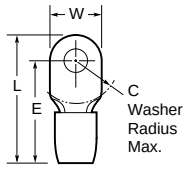

Wire Size Circular Mils [mm²]	Tongue Material Thickness Max.	Stud Size	Dimensions W	C	E Max.	L Max.	Terminal Insulation Color	Wire Insulation Diameter Max.	Part Numbers Loose Piece
8 13,100-20,800 [6.64-10.5]	**.043** 1.09	8 M4	**.478** 12.14	**.437** 11.10	**1.183** 30.05	**1.425** 36.20	Red	**.256** 6.50	53041
		10	**.431** 10.95	**.437** 11.10	**1.183** 30.05	**1.402** 35.61	Red	**.256** 6.50	324043
		1/4 M6	**.478** 12.14	**.437** 11.10	**1.183** 30.05	**1.425** 36.20	Red	**.256** 6.50	324082
		5/16 M8	**.587** 14.91	**.500** 12.70	**1.246** 31.65	**1.542** 39.17	Red	**.256** 6.50	324044
		3/8	**.587** 14.91	**.500** 12.70	**1.246** 31.65	**1.542** 39.17	Red	**.256** 6.50	324045
6 20,800-33,100 [10.5-16.8]	**.048** 1.22	10	**.398** 10.11	**.515** 13.08	**1.447** 36.75	**1.700** 43.18	Blue	**.314** 7.98	53119-1[1]
			.468 11.89	**.421** 10.69	**1.338** 33.99	**1.575** 40.01	Blue	**.314** 7.98	324046
		1/4 M6	**.500** 12.70	**.515** 13.08	**1.447** 36.75	**1.700** 43.18	Blue	**.314** 7.98	324047
		5/16 M8	**.625** 15.88	**.515** 13.08	**1.447** 36.75	**1.762** 44.75	Blue	**.314** 7.98	324048
		3/8	**.625** 15.88	**.515** 13.08	**1.447** 36.75	**1.762** 44.75	Blue	**.314** 7.98	324049
4 33,100-52,600 [16.8-26.7]	**.051** 1.30	8 M4	**.437** 11.10	**.265** 6.73	**1.155** 29.34	**1.376** 34.95	Yellow	**.382** 9.70	331456
		10	**.437** 11.10	**.265** 6.73	**1.155** 29.34	**1.376** 34.95	Yellow	**.382** 9.70	1-331456-0
			.546 13.87	**.531** 13.49	**1.536** 39.01	**1.812** 46.02	Yellow	**.382** 9.70	324111
		1/4 M6	**.546** 13.87	**.531** 13.49	**1.536** 39.01	**1.812** 46.02	Yellow	**.382** 9.70	324050
		5/16 M8	**.679** 17.25	**.531** 13.49	**1.536** 39.01	**1.878** 47.70	Yellow	**.382** 9.70	324051
		3/8	**.679** 17.25	**.531** 13.49	**1.536** 39.01	**1.878** 47.70	Yellow	**.382** 9.70	324052*
2 52,600-83,700 [26.7-42.4]	**.060** 1.52	1/4 M6	**.679** 17.25	**.578** 14.68	**1.705** 43.31	**2.045** 51.94	Red	**.468** 11.89	324053
		5/16 M8	**.711** 18.06	**.578** 14.68	**1.705** 43.31	**2.063** 52.40	Red	**.468** 11.89	324112
		3/8	**.711** 18.06	**.578** 14.68	**1.705** 43.31	**2.063** 52.40	Red	**.468** 11.89	324054
1/0 83,700-119,500 [42.4-60.6]	**.073** 1.85	5/16 M8	**.807** 20.50	**.625** 15.88	**2.033** 51.64	**2.426** 61.62	Blue	**.580** 14.73	324113
		3/8	**.807** 20.50	**.625** 15.88	**2.033** 51.64	**2.426** 61.62	Blue	**.580** 14.73	324057
2/0 119,500-150,500 [60.6-76.3]	**.083** 2.11	3/8	**.926** 23.52	**.625** 15.88	**2.026** 51.46	**2.416** 61.37	Yellow	**.610** 15.49	324084

* Available in small packaging quantities.
[1] Rectangular tongue terminal.

Tooling

Insulated Terminals and Splices — 30 to 10 AWG Wire Range

Description	AMP Wire Range	Tools for Loose Piece Termination					Tools for Tape Mounted Terminations				
		Hand Tools		Pneumatic Tools							
		Single Wire Range	Multi-Wire Range	Heads for 6-26 Single Wire Range	Heads for 6-26 Multi-Wire Range	Dies for 69365, 69365-2, 69710-1[3], 217200-1[4]	Tape Dies for 69875 TAPETRONIC No Applicator Required	Tape Dies for 354500-1 AMP-O-LECTRIC Model "G" Applicator 567200-3	Tape Dies for 818380-1 AUTO-PRO Applicator 818057-2	Tape Dies for AMPOMATOR CLS III G, CLS IV Applicator 687658-1	Tape Dies for 565435-5 AMP-O-LECTRIC Model "K" Applicator 567200-2
PIDG Terminals & Splices and PLASTI-GRIP Terminals	30-26	69163–uses 26-22 Terms.	—	—	—	—	—	—	—	—	—
	26-22	46121†	59275†	314537-1	—	69344	69877	69877	69877	69877	69877
	22-16	47386†	59250† 59824-1[1] 58433-3[2]	314270-3	679305-1	47806-2	69872* 59826-1[1]	69872* 59826-1[1]	69872* 59826-1[1]	69872* 59826-1[1]	69872* 59826-1[1]
	16-14	68343-1 (.250 exp.) 47387	59250† 59824-1[1] 58433-3[2]	314269-1	679305-1	47807-1	69873* 59827-1[1]	69873* 59827-1[1]	69873* 59827-1[1]	69873* 59827-1[1]	69873* 59827-1[1]
	12-10 16-14 HD	59239-4† 59287-2 (.300 exp.)	59824-1[1] 58433-3[2]	679300-1	679305-1	47808-6 Std. 47808-5 (.300 exp.)	69874* 69897 (.300 exp.) 59828-1[1]	69874* 69897 (.300 exp.) 59828-1[1]	69874* 69897 (.300 exp.) 59828-1[1]	69874* 69897 (.300 exp.) 59828-1[1]	69874* 69897 (.300 exp.) 59828-1[1]
PLASTI-GRIP Splices	26-22	46121 (butt spl. only)	—	—	—	—	—	—	—	—	—
	22-16	45160 (butt spl. only) 45449 (parallel spl. only)	58433-3[2] (butt spl. only)	314868-1 (butt spl. only)	—	—	69872 (butt spl. only)	69872 (butt spl. only)	69872 (butt spl. only)	69872 (butt spl. only)	69872 (butt spl. only)
	16-14	45575-1 (butt spl. only) 45450 (parallel spl. only)	58433-3[2] (butt spl. only)	314869-1 (butt spl. only)	—	—	69873 (butt spl. only)	69873 (butt spl. only)	69873 (butt spl. only)	69873 (butt spl. only)	69873 (butt spl. only)
	12-10 16-14 HD	59489 (butt spl. only) 59287-1 (.300 exp. butt spl. only) 59270 (parallel spl. only)	58433-3[2] (butt spl. only)	—	—	—	69874 (butt spl. only)	69874 (butt spl. only)	69874 (butt spl. only)	69874 (butt spl. only)	69874 (butt spl. only)

†Tooling with adjustable insulation crimp.
*Same die set/configuration as in hand tools.
[1]TETRA-CRIMP die configuration.
[2]PRO-CRIMPER II commercial tool not approved for UL applications.
[3]69710-1 hand tool.
[4]6-26 Pneumatic Tool Adapter

Tooling

Insulated Terminals and Splices — 8 to 4/0 AWG Wire Range

Description	Wire Size	Tools for Loose Piece Terminations				Tools for Tape Mounted Terminations	
		Hand Tools	Dies for Crimp Head 69051[1] & Hydraulic Hand Tool 59974-1	Dies for Crimp Head 69066[1] & 58422-1[1]	Head for Penumatic Hand Tool 69015	Dies for AMP Tapetronic Machine 68250-1	Dies for AMP Tapetronic Machine with Insulation Adjustment 68250-2
PLASTI-GRIP Terminals and Splices	8	69959	48752-1 47820[2]	—	—	68247-1[2]	1214512-1[4] 1214512-2[5]
	6	—	48753-1 47821[2]	—	68325-1	68248-1[2]	1213500-1[4] 1213500-2[5]
	4	—	48754-1 47822[2]	—	—	68249-1[2]	1213098-1[4] 1213098-2[5]
	2	—	48755-1 47823[2]	—	—	—	—
	1/0	—	—	48756-1	—	—	—
	2/0	—	—	48757-1	—	—	—
AMPLI-BOND Terminals	8	69959	48752-1	47236-1[3]	—	—	—
	6	—	48753-1	47237-1[3]	68325-1	—	—
	4	—	48754-1	47238-1[3]	—	—	—
	2	—	48755-1	47239-1[3]	—	—	—
	1/0	—	—	48756-1 47378-1[3]	—	—	—
	2/0	—	—	48757-1	—	—	—
	3/0	—	—	48758-1	—	—	—
	4/0	—	—	48759-1	—	—	—
TERMINYL Terminals and Splices	8	—	47820	—	68285-1	—	—
	6	—	47821	—	—	—	—
	4	—	47822	—	—	—	—
	2	—	47823	—	—	—	—
	1/0	—	—	47824	—	—	—
	2/0	—	—	47825	—	—	—
	3/0	—	—	47915	—	—	—
	4/0	—	—	47918	—	—	—
	4 HD	—	—	69463	—	—	—

[1] Heads for Power Units 69120-1, 69120-2, or 314979-1.
[2] No insulation crimp.
[3] Large expansion dies.
[4] Without insulation crimp.
[5] With insulation crimp.

Product Facts

- **Nylon window splice for military, commercial, aircraft, and missile applications that seals out vapors and fluids and imparts exceptional wire insulation support**
- **Metal rings at both ends of splice and permanently crimped to wire insulation for a moisture tight seal, even at altitude**
- **Designed to fit more than 100 insulation diameters in MIL-Spec wires from #24 to #10 AWG, and is available in three types**
  - **First type is made with a nylon ring adapter within the wire entrance**
  - **Second type, without nylon ring adapters**
  - **Third type with a nylon ring adapter in one end only**
- **Special notch feature on the outside of the splice allows locator in the crimping tool to precisely position splice before crimping and to prevent twisting or horizontal movement during crimping**
- **Window area of each splice permits visual inspection of the linear plane of the crimp in relation to the inner metal sleeve**
- **Wire-stops in splice barrel indicate exact insertion depth of stripped wire-ends**

Color Coding. The splice body is color coded by wire size: Tin plated for 24-20, Red for 22-18, Blue for 16-14, Yellow for 12-10. The metal rings are color coded green or orange to identify the presence of adapters.

Basic Splice Material. The basic splice body is constructed of fine grade high conductivity copper per ASTM B-152 and is either color coded or tin-plated per ASTM B-545. AMP's special plating process creates durable corrosion resistance to salt spray and most chemical fumes.

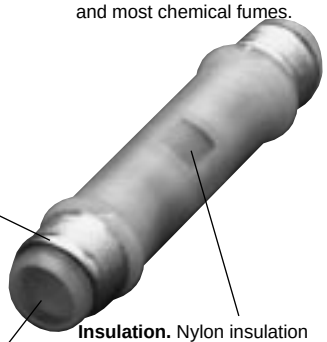

Rings. Metal rings at both ends permanently seal the splice to the wire insulation for a moisture tight seal.

Insulation. Nylon insulation assures high dielectric strength. Special notch feature allows crimping tool locator to position the splice to prevent twisting during crimping.

Adapters. Nylon ring adapter allows for smaller wire insulation diameters.

Splice

Material and Finish:

Insulation — Nylon

Splice Body — Copper per ASTM B-152

Plating — Tin per ASTM B-545 or Zinc Plate/Dye Chromate

Related Product Data:

Application Tooling — Below

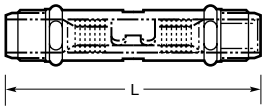

Splices with nylon wire insulation diameter adapters

Wire Size Circular Mils [mm²]	L Max.	Body Color	Ring Color	Wire Insulation Dia. Max.	Part Numbers	Hand Tool Part No.
24-20 320-1,290 [0.16-0.65]	**.970** 24.64	Tin Plated	Green	**.065** 1.65	324987	46073
16-14 2,050-5,180 [1.04-2.62]	**1.156** 29.36	Blue	Green	**.120** 3.05	324989	59282

Tooling



Tool Part Number 46073



Tool Part Number 59282

Hand tooling features the AMP CERTI-CRIMP ratchet which assures that operator fully closes tool so that crimping dies in tool head fully "bottom". Locator feature in head assures that splice is properly oriented in tool.

CERTI-SEAL Tools do not require wire insulation adjustment prior to crimping.

For complete product information, order Catalog 82042

Products for Industrial & Commercial Applications
Dimensions are shown for reference purposes only.
Dimensions are in inches and millimeters unless otherwise specified. Values in brackets are metric equivalents.
Specifications subject to change.
Technical Support Center
1-800-522-6752
www.tycoelectronics.com

Product Facts

- **For single and multiple wire applications**
- **Nylon or vinyl or PVF2 insulated**
- **Temperature ratings of 90°C, 105°C, 150°C**
- **300V, 600V or 1000V rated**
- **Crescent crimp configuration**
- **Covers wire ranges from 24 to 6 AWG [0.2 to 16 mm²] 509 to 42,700 CMA**
- **Copper or steel splice material**
- **Plated or unplated**
- **Solid or stranded copper wire**
- **and approved**



AMP Pre-insulated Closed End Splices have been designed specifically to answer the need for inexpensive, insulated electrical terminations. They can be used in almost every type of commercial application where multiple wires need to be brought together for a reliable termination. (e.g. large and small appliances and the lighting industry).

The Closed End Splice products described in this catalog accommodate wire sizes from 24 through 6 AWG [0.2 to 16 mm²] 509 to 42,700 CMA. The appeal of Closed End Splice products lies in their broad range of wire sizes, built in pre-insulation, ease and speed of application, uniform reliability, and low installed cost.

As is true of all AMP terminal and splice lines, carefully engineered application tooling has been developed for the Closed End Splice line to provide uniformly high quality terminations. Tool and terminal have been designed as a team to promote ease and speed of application and at the same time to provide precise crimping pressure for every wire size combination. This connection provides maximum conductivity, tensile strength, and high resistance to corrosion.

The quality of performance, the facility of installation and the inherent simplicity of Closed End Splices make them ideal for many industrial applications.

Need more information?

Call the Technical Support Center: 1-800-522-6752

The Technical Support Center is staffed with specialists well versed in all AMP products. The Center can provide you with:

- Engineering Support
- Catalogs
- Technical Documents
- Product Samples
- AMP Authorized Distributor Locations

For complete product information, order Catalog 65472

Products for Industrial & Commercial Applications

Dimensions are shown for reference purposes only.

Dimensions are in inches and millimeters unless otherwise specified. Values in brackets are metric equivalents.

Specifications subject to change.

Technical Support Center
1-800-522-6752
www.tycoelectronics.com

Vinyl BOMB-TAIL Splices –– VS, ECV

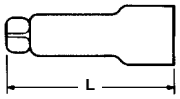

Wire Size [mm²] Circular Mils	Wire Combination Charts	Insulation Color	L Dim. Max.	Opening Dia. Min.	Material	Plating	Splice Marking* (Voltage & Temp. Rating Code)	Part Numbers	
								Loose Piece	Tape Mounted
22-16 [0.3-1.4] 3,248-4,872	408-1396	Blue	**.750** 19.05	**.173** 4.39	Copper	Tin	VS	34306	—
		Blue	**.800** 20.32	**.215** 5.46	Copper	Tin	VS	34864	—
22-16 [0.3-1.4] 3,248-4,872	408-2228	Trans.	**1.093** 27.76	**.255** 6.48	Steel	Tin	ECV	50920	—
	408-1395	Trans.	**1.000** 25.40	**.265** 6.73	Steel	Tin	ECV	328890	—
		Trans.	**.825** 20.96	**.265** 6.73	Steel	Tin	ECV	330021	1-330021-0
22-14 [0.3-2.0] 509-5,180	408-1394	Red	**.729** 18.52	**.156** 3.96	Copper	Tin	VS	34304	—
		Purple	**.740** 18.80	**.187** 4.75	Copper	Tin	VS	—	2-36964-2
		Purple	**.775** 19.69	**.235** 5.97	Copper	None	VS	2-328375-3	—
	408-9850	Purple	**.900** 22.96	**.235** 5.97	Copper	None	ECV	55843-1	—
22-12 [0.3-3.0] 3,248-11,400	408-1479	Trans.	**1.500** 34.10	**.360** 9.14	Copper	None	ECV	53234-1†	—
		Trans.	**1.125** 28.58	**.360** 9.14	Copper	None	ECV	—	2-329251-1†
22-10 [0.3-6.0] 3,248-13,100	408-1029	Purple	**1.010** 25.65	**.312** 7.92	Copper	Tin	VS	36965	1-36965-1
	408-1002	Purple	**1.125** 28.88	**.360** 9.14	Copper	Tin	ECV	321519	—
22-10 [0.3-6.0] 5,180-13,100	408-1397	Yellow	**.975** 24.76	**.235** 5.97	Copper	Tin	VS	34308	—
18-8 [0.8-8.0] 10,320-20,820	408-1008	Black	**1.263** 31.08	**.500** 12.70	Copper	Tin	ECV	55808-1	—
		Green	**1.575** 40.01	**.500** 12.70	Copper	Tin	ECV	320788	—
18-6 [0.8-16] 19,500-42,700	408-2605	Blue	**1.600** 40.64	**.500** 12.70	Copper	None	ECV	53891-1	—

† Stranded Wire Only

Nylon Molded Splices –– ECN, EC

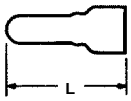

Wire Size [mm²] Circular Mils	Wire Combination Charts	Insulation Color	L Dim. Max.	Opening Dia. Min.	Material	Plating	Splice Marking* (Voltage & Temp. Rating Code)	Part Numbers	
								Loose Piece	Tape Mounted
22-14 [0.3-2.0] 509-5,180	408-1271	Trans.	**.680** 17.27	**.250** 6.35	Copper	Tin	ECN	—	1-35115-0
	408-8806	Black	**.680** 17.27	**.250** 6.35	Copper	Tin	ECN††	55927-1	—
22-10 [0.3-6.0] 3,248-13,100	408-1021	Trans.	**.775** 19.69	**.375** 9.53	Copper	Tin	ECN	35653	2-35653-1
	408-8807	Black	**.970** 24.64	**.370** 9.40	Copper	Tin	EC††	55929-1	—
	408-1003	Trans.	**.970** 24.64	**.370** 9.40	Copper	Tin	EC	53915-1	53915-2
		Trans.	**.720** 18.29	**.375** 9.53	Copper	Tin	EC	328730	—

***Splice Marking**
VS — 300V, 90°C
ECV — 600V max. Building Wiring
—1,000V max. Fixtures and Signs, 105°C UL, 90°C CSA
ECN — 300V 105°C
EC — 600V max. Building Wiring
—1,000V max. Fixtures and Signs 105°C
†† — Max. Recommended Operating Temperature, 150°C

For complete product information, order Catalog 65472

Products for Industrial & Commercial Applications
Dimensions are shown for reference purposes only.
Dimensions are in inches and millimeters unless otherwise specified. Values in brackets are metric equivalents.
Specifications subject to change.
Technical Support Center 1-800-522-6752 www.tycoelectronics.com

Vinyl and Nylon Tooling

Manually Operated Tools

Our top-of-the-line crimping tools feature the original CERTI-CRIMP ratcheted crimp control. All tools are designed to exacting specifications and manufactured using the highest quality materials to provide long service life for low production runs, repairs and prototype work — any application requiring consistent, highly reliable terminations. Models are available providing double action, in which crimping dies travel in an arc-like path, or straight action, which prevents possible rotation of the terminal due to die arcing. A heavy-head style terminates large heavy-gauge wire.



Heavy Head Hand Tool (HHHT)



Long Handle Tool (DAHT)



AMP-TAPETRONIC Machine Part Number 69875 (Requires Dies)

Vinyl

Wire Size [mm²] Circular Mils	Wire Combination Chart	Tools for Loose Piece Splices: Hand Tool	Crimping Head for 69005 or (69010)	Die for[4] Model 2614**	Die for Model 1210**	Die Assembly[3] for 69365, 69365-2, 69710, 46110-2 & 69319-1	Crimping Jaws for 68068 & 68068-3[2]	For Tape Mounted Splices: Die Assembly for 69875[2]	Part Numbers: Loose Piece	Part Numbers: Tape Mounted
22-16 [03-1.4] 3,248-4,872	408-1396	45329 CC 45330 Insul. Crimp CC	45328 CC	—	—	68022 CC	—	—	34306	—
		45329 CC	45328 CC	—	—	68022 CC	—	—	34349	—
									34864	—
22-16 [03-1.4] 3,248-4,872	408-2228	—	—	—	—	69820 Insulation Crimp C	—	—	50920	—
									50920-1[1]	—
	408-1395	69145 C	69238-1 Requires Die 69239 C	—	—	69303-2 C	—	69973 C	328890	2-328890-1
									330021	1-330021-0
22-14 [0.3-2.0] 509-5,180	408-1394	45216 CO 48087 CC* 48208 C	45217 CO 302219† C	354422-1CO 314833-1CO	—	45218 CO	—	69951 CO	34304	—
									36964	2-36964-2
									2-36964-5[1]	—
									2-328375-3	—
	408-9850								55843-1	—
22-12 [0.3-3.0] 3,248-11,400	408-1479	46866 C	69430 C (46516) C	—	314592-1C	47811 C	—	69952 C	53234-1	—
									329251	2-329251-1
									2-329251-2[1]	—
22-10 [0.3-6.0] 3,248-13,100	408-1029	45219-2 CO 48208 C	37836† C 302219† C (45220) CO	—	314621-1CO	45221 CO	—	69950 CO	36965	1-36965-1
									1-36965-3[1]	—
	408-1002								321519	2-321519-2
22-10 [0.3-6.0] 5,180-13,100	408-1397	45324 CC	45323 CC (45325) CC	—	—	45221 CO	—	—	34308	—
									34865	—
18-8 [0.8-8.0] 10,320-20,820	408-1008	69335 C	(69244) C	—	—	—	68245-1CO	—	55808-1	—
									320788	—
18-6 [0.8-16] 19,500-42,700	408-2605	—	—	—	—	—	68268-1CO	—	53891-1	—

*For p/n **34304** and **36964** only (insulation crimp)
**Where listed Model 2614 or 1210 are the recommended tool
[1] Bulk packaged
[2] With foot pedal control
[3] These dies may be used with Model 2614 Pneumatic Tool and Straight Action Adapter part number **354173-1**
[4] Model 2614 may be ordered with either a foot pedal or hand actuator

For complete product information, order Catalog 65472

Products for Industrial & Commercial Applications
Dimensions are shown for reference purposes only.
Dimensions are in inches and millimeters unless otherwise specified. Values in brackets are metric equivalents.
Specifications subject to change.
Technical Support Center 1-800-522-6752 www.tycoelectronics.com

Nylon and Vinyl Tooling

Pneumatic Tools

Designed for medium production, these semi-automatic power tools offer the convenience of hand tools plus the effortless precision and speed of machines. They are built for long, rugged service and are equipped with removable crimping dies for terminating a variety of AMP products.



Pneumatic Tool Part Number 69005 or 69010



Pneumatic Tool Part Number 46110-2



Pneumatic Tool Model No. 2614 or 1210



Pneumatic Tool Part Number 69365-2

Nylon

Wire Size [mm²] Circular Mils	Wire Combination Chart	Tools for Loose Piece Splices: Hand Tool	Crimping Head for 69005 or (69010)	Die for[4] Model 2614**	Die for Model 1210**	Die Assembly[3] for 69365, 69365-2, 69710, 46110-2 & 69319-1	For Tape Mounted Splices: Die Assembly 69875[2]	Part Numbers: Loose Piece	Part Numbers: Tape Mounted
22-14 [0.3-2.0] 509-5.180	408-1271	45216 CO 48208 C	45217† CO 302219† C	354422-1CO 314833-1CO	—	45218 CO	69951 CO	35115	1-35115-0
								1-35115-2[1]	—
	408-8806							55927-1	1-55927-0
22-10 [0.3-6.0] 3,248-13,100	408-1021	45219-2 CO 48208 C	37836† CO 302219† C (45220) CO	—	314621-1CO	45221 CO	69950 CO	35653	2-35653-1
								2-35653-2[1]	—
	408-8807	46866 C	69430 C	354422-2[5]C	314592-1C	47811 C	69952 C	55929-1	—
	408-1003							53915-1	53915-2
								53915-4	—
								328730	2-328730-1
								328730-1	—

** Where listed Model 2614 or 1210 are the recommended tool.
[1] Bulk packaged.
[2] With foot pedal control.
[3] These dies may be used with Model 2614 Pneumatic Tool and Straight Action Adaptor Part Number **354173-1**.
[4] Model 2614 may be ordered with either a foot pedal or hand actuator.
[5] Limited wire size. See Instruction Sheet 408-9906.

Type of Crimp

C — C Crimp
CC — Confined Crescent
CO — Crescent Oval

† Stranded Wire Only

Spare Wire Caps and Tooling

Material:
Copper Tin plated
Insulation — Nylon

For Unstripped Wire

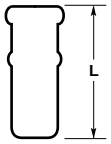

For Stripped Wire

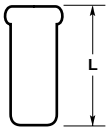

Wire Size [mm²] Circular Mils	Style	Dimension L Max.	Cap Insulation Color	Wire Insulation Diameter Range	Wire Insulation Diameter Max.	Part Numbers	Tooling		
						Loose Piece	Hand Tool	T-Head	Die For 69875
—	Unstripped Wire	**.515** 13.08	Yellow	**.150-.220** 3.81-5.59	—	324487	46063	—	—
22-18 [0.3-0.8.5] 509-3,248	Stripped Wire	**.430** 10.92	Red	—	**.124** 3.15	328307*	47386[1]	59250	—
16-14 [1.4-2.0] 2,050-5,180	Stripped Wire	**.430** 10.92	Blue	—	**.149** 3.78	328308*	47387[1]	59250	68169-1
12-10 [3.0-6.0] 5,180-13,100	Stripped Wire	**.478** 12.14	Yellow	—	**.210** 5.33	328309*	59239-4[2]	—	—
—	Unstripped Wire	**.515** 13.08	Trans.	**.048-.075** 1.22-1.91	—	324693[3]	46063	—	—
		.515 13.08	Blue	**.120-.145** 3.05-3.68	—	324695[3]	46063	—	—

[1] Long Handle Tool
[2] Heavy Head Tool
[3] Moisture resistant
*See Table I

Table I: Military Cross Reference (meets MIL-T-7928)

Military			Part Number
Part Number	Dash	Class	
MS 25274	-2	1 & 2	328307
	-3	1 & 2	328308
		2	2-328308-1
	-4	1 & 2	328309

For additional tooling information, consult Technical Support Center at 1-800-722-1111

For complete product information, order Catalog 65472

Products for Industrial & Commercial Applications
Dimensions are shown for reference purposes only.
Dimensions are in inches and millimeters unless otherwise specified. Values in brackets are metric equivalents.
Specifications subject to change.
Technical Support Center 1-800-522-6752 www.tycoelectronics.com

Introduction

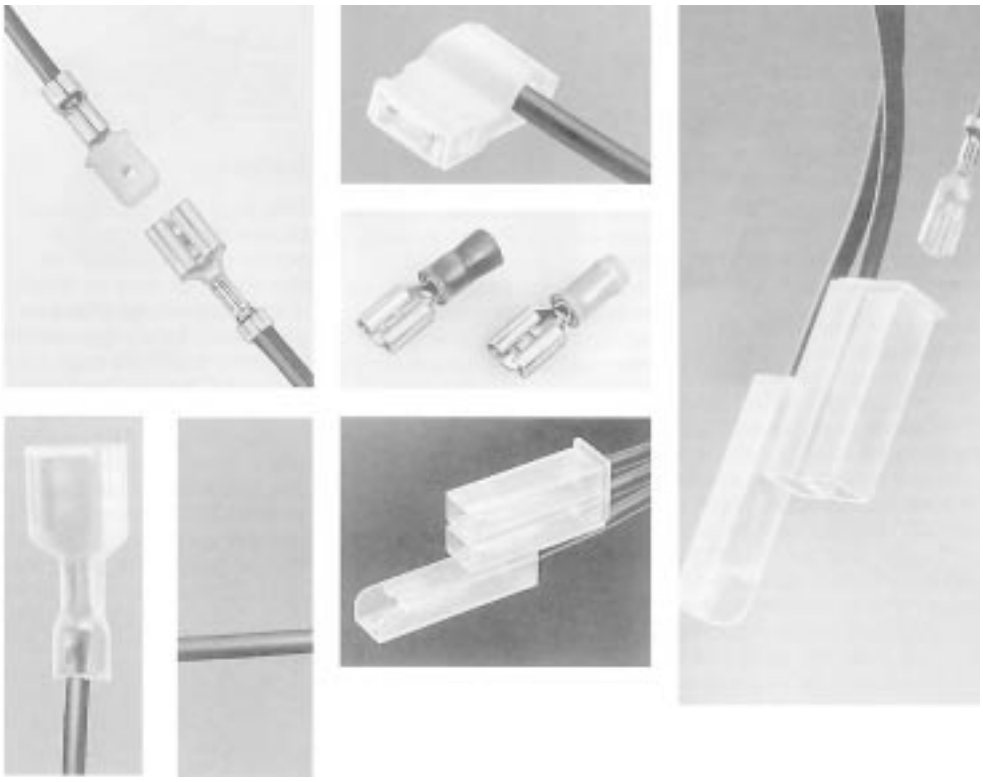

The AMP FASTON Terminals product line, including Ultra-Fast and Ultra-Fast Plus fully insulated terminals, as well as Positive Lock receptacles consists of receptacles, tabs and splices specifically designed for quick connections. FASTON products are grouped according to tab width dimensions in series “312”, “250”, “205”, “187”, “125” and “110”. This product line offers speed of application, uniform reliability and low per line cost. These advantages have made FASTON products the number one choice of leaders in the appliance and automotive industries. Other industries for FASTON products are computer and peripheral equipment, industrial controllers, test equipment and telecommunications equipment manufacturers.

Speed of application is achieved through the use of application tools for which a complete line has been developed specifically for these terminals. See application tooling section in back of catalog for general information. Specific rates and capabilities can be obtained by contacting the Technical Support Center at 1-800-522-6752.

Over thirty years of history has proven the reliability of this product line. Built-in features also add to the reliability of FASTON products which include: crimping dimensions for each terminal which are precisely controlled providing all connections with excellent performance; low per line cost derived from low initial product cost, high application speeds, and plug-in assemblies of the finished termination as well. The combination of these features brings the user the lowest overall costs for quick connect/disconnect terminations.

For complete product information, order Catalog 82004

Products for Industrial & Commercial Applications
Dimensions are shown for reference purposes only.
Dimensions are in inches and millimeters unless otherwise specified. Values in brackets are metric equivalents.
Specifications subject to change.
Technical Support Center 1-800-522-6752 www.tycoelectronics.com

FASTON Receptacle Lines

The AMP family of quick connects provides the right product for every application. All styles provide the necessary features for quality and reliable interconnections. All lines meet the applicable requirements of UL 310.

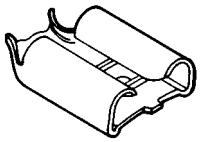

Premier
The receptacle configuration of the Premier, with its resilient rolls and double slot bottom allows maximum compliancy while retaining the high normal forces necessary to provide good wiping action and highly reliable interface. The secret to the resilience of the Premier receptacle is in the thermal stress relieving each terminal receives. This extra processing step relieves the residual stresses the stamping process imparts and allows the receptacle to resist the effects of over-stressing, while retaining the normal forces which provide good cleaning action and low, stable resistance under a variety of operating conditions.

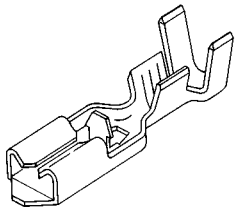

Positive Lock
Positive Lock receptacles are designed with reduced mating forces, and a large locking dimple on a flexible latch. This locking feature ackknowledges proper mating with an audible "snap" of the dimple into the mating hole. This enhances safety and reliability of the mated pair for isolated and hard to reach areas. Until the release latch is depressed manually the receptacle cannot be removed.

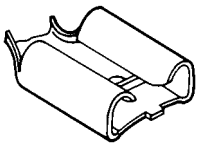

Budget
The Budget line of receptacles has receptacle construction similar to the Premier and is easily distinguished by the single slot. The single most important difference between the Budget and Premier line is that the Budget does not receive the special processing of the Premier. In addition, in the .250 series, the Budget receptacles are constructed of lighter .016 brass.

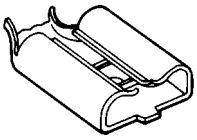

Economy
The Economy receptacle is separated from its counterparts by the large lead-in provided by its flaired, relatively low, roll construction. This roll construction and lead-in, with tab contact coming on the mill finish of the brass instead of a profiled edge, makes for lower average insertion forces at relatively high normal forces.

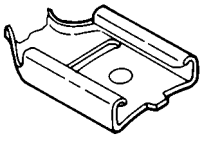

Commercial
The commercial receptacles, with their abbreviated roll construction, conserve stock, have generally higher insertion forces and somewhat lower tolerance for abuse.

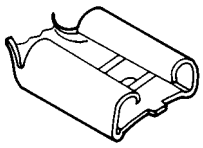

Hermetic
The Hermetic receptacle is a Premier receptacle which has been designed to mate with the posted header tabs in hermetic motor applications. This receptacle provides all the features and benefits of the Premier line.

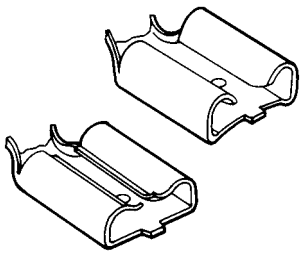

Moldable
The moldable receptacle is available in many of the same configurations shown and is produced without slots or openings in the floor of the receptacle to facilitate over-molding.

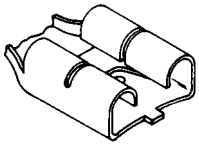

Low Insertion Force
The Low Insertion Force receptacle offers lower insertion forces than the other receptacle styles thru the unique design features of a two-stage receptacle and a cantilever mounted locking dimple.

For complete product information, order Catalog 82004

Products for Industrial & Commercial Applications
Dimensions are shown for reference purposes only.
Dimensions are in inches and millimeters unless otherwise specified. Values in brackets are metric equivalents.
Specifications subject to change.
Technical Support Center
1-800-522-6752
www.tycoelectronics.com

312 Series Receptacles – Straight Insulation Support

Low Insertion Force Line

(.312 x .032 [7.92 x 0.81] tab fit)
Stock Thickness: .016 [0.41]

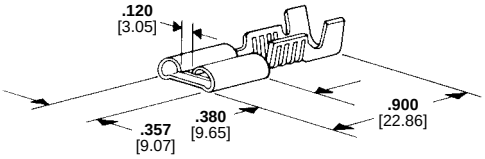

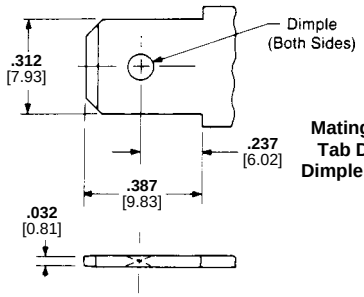

Mating 312 Series Tab Dimensions Dimple (Both Sides)

Wire Range AWG	Insulation Diameter	Material and Finish	Terminal Part Number	Quick-Change Applicator No.*
16-12	**.160 or (2) .110** 4.06 or 2.79 Max.	Tin Plated Brass	63677-1[1]	687944-2

[1] Stress relieved.

250 Series Receptacles, Straight Insulation Support

Premier Line

(.250 x .032 [6.35 x 0.81] tab fit)

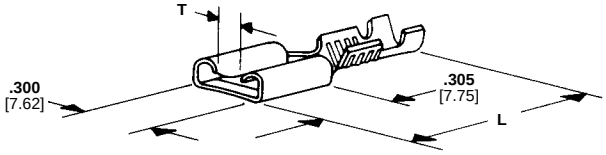

Wire Range AWG	Insulation Diameter	Stock Thickness	Dimensions L	Dimensions T	Material and Finish	Terminal Part Numbers	UL	CSA	Quick-Change Applicator No.*
22-18	**.060-.100** 1.52-2.54	**.016** .401	**.755** 19.18	**.090** 2.29	Tin Plated Brass	42640-2	X	—	X	687931-2
16-12 or (2) 18	**.210-.265** 5.33-6.73	**.018** .456	**.830** 21.08	**.072** 1.83	Nickel Plated Steel	42579-1	—	X	X	466284-7
14-10 or (2) 14	**.225-.227 or (2) .140 Max.** 5.72-5.77 or (2) 3.56 Max.	**.018** .456	**.755** 19.18	**.090** 2.29	Brass	60635-3[1]	X	—	X	466018-3
12-10	**.150-.200** 3.81-5.08	**.018** .456	**.755** 19.18	**.090** 2.29	Tin Phos. Brz.	62428-3	X	—	X	466532-1

[1] 9,600 CMA max.

Budget Line

(.250 x .032 [6.35 x 0.81] tab fit)
Stock Thickness: .016 [0.41]

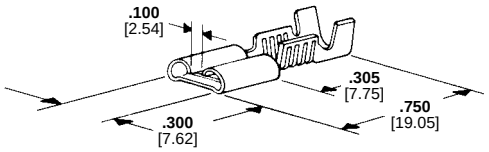

Wire Range AWG	Insulation Diameter	Material and Finish	Terminal Part Numbers	UL	CSA	Quick-Change Applicator No.*
22-18	**.090–.130** 2.29-3.30	Brass	42510-1	X	—	X	687875-2
		Tin Plated Brass	42510-2	X	—	X	687875-2
20-14	**.085–.135** 2.16-3.43	Tin Plated Brass	63648-2[2]	—	—	—	680109-2
18-14	**.120–.170** 3.05-4.32	Brass	42400-1	X	—	X	466649-2
		Tin Plated Brass	42400-2	X	—	X	466649-2
		Silver Plated Brass[3]	61107-1	X	—	X	687823-2
14-10	**.150–.200** 3.81-5.08	Silver Plated Brass	61095-1[1,3]	X	—	X	687857-1

[1] .018 stock, .100 = .065
[2] .012 stock (multiple circuit housings).
[3] 9600 CMA max.

***** Quick-Change Applicator for AMP-O-LECTRIC Machine 565435-5. For AMPOMATOR Machine and other machines not listed, consult Tyco Electronics.

For complete product information, order Catalog 82004

Products for Industrial & Commercial Applications
Dimensions are shown for reference purposes only.
Dimensions are in inches and millimeters unless otherwise specified. Values in brackets are metric equivalents.
Specifications subject to change.
Technical Support Center
1-800-522-6752
www.tycoelectronics.com

250 Series Receptacles – Straight Insulation Support

Economy Line

(.250 x .032 [6.35 x 0.81] tab fit)
Stock Thickness: .016 [0.41]

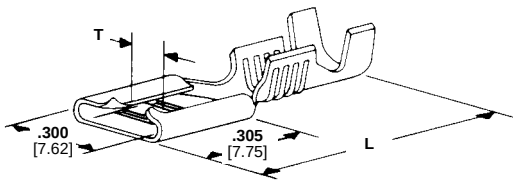

Wire Range AWG	Insulation Diameter	Dimensions L	Dimensions T	Material and Finish	Terminal Part Numbers	UL	CSA	SP	Quick-Change Applicator No.*
18-14	**.120-.170** 3.05-4.32	**.755** 19.18	**.115** 2.92	Brass	42660-1	X	—	X	466649-2
	.150-.210 3.81-5.33	**.780** 19.81	**.115** 2.92	Brass	42692-2	X	—	X	687941-2

Low Insertion Force Line — Premier

(.250 x .032 [6.35 x 0.81] tab fit)

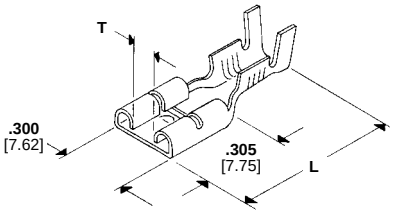

Wire Range AWG	Insulation Diameter	Stock Thickness	Dimensions L	Dimensions T	Material and Finish	Terminal Part Numbers	UL	CSA	SP	Quick-Change Applicator No.*
22-18	**.090-.130** 2.29-3.30	**.016** 0.41	**.755** 19.18	**.096** 2.44	Brass	63609-1	X	—	X	687875-2
					Tin Plated Brass	63609-2	X	—	X	687875-2
18-14	**.120-.170** 3.05-4.32	**.018** 0.46	**.755** 19.18	**.096** 2.44	Brass	63537-1	X	—	X	567687-2
	.120-.170 3.05-4.32	**.016** 0.41	**.755** 19.18	**.076** 1.93	Nickel Plated Steel	63674-1	—	—	—	466649-2
14-10	**.225-.275 or (2) .190 max.** 5.72-6.99 or (2) 4.83	**.018** 0.46	**.775** 19.18	**.065** 1.65	Tin Plated Brass	63539-1[1]	X	—	X	466018-3

Low Insertion Force Line — Budget

(.250 x .032 [6.35 x 0.81] tab fit)

Wire Range AWG	Insulation Diameter	Stock Thickness	Dimensions L	Dimensions T	Material and Finish	Terminal Part Numbers	UL	CSA	SP	Quick-Change Applicator No.*
18-14	**.120-.170** 3.05-4.32	**.016** 0.41	**.775** 19.18	**.096** 2.44	Brass	63306-1	X	—	X	466649-2
					Tin Plated Brass	63306-2	X	—	X	466649-2
14-10	**.150-.200** 3.81-5.08	**.018** 0.46	**.775** 19.18	**.065** 1.65	Brass	63365-1[1]	X	—	X	687857-3
					Tin Plated Brass	63365-2[1]	X	—	X	687857-3

[1] 9600 CMA max.

AMPLIVAR FASTON Receptacles (for use with magnet wire)

(.250 x .032 [6.35 x 0.81] tab fit)
Stock Thickness: .016 [0.41]

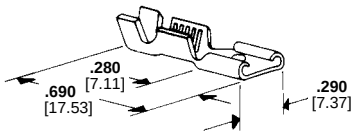

Wire Range AWG	Insulation Diameter	Material and Finish	Terminal Part Number	Quick-Change Applicator No.*
20-16 or (2) 23 or (2) 20	**.100–.140 or (2) .060 Max.** 2.54-3.56 or (2) 1.52	Brass	60384-1	466010-1

***** Quick-Change Applicator for AMP-O-LECTRIC Machine 565435-5. For AMPOMATOR Machine and other machines not listed, consult Tyco Electronics.

For complete product information, order Catalog 82004

Products for Industrial & Commercial Applications
Dimensions are shown for reference purposes only.
Dimensions are in inches and millimeters unless otherwise specified. Values in brackets are metric equivalents.
Specifications subject to change.
Technical Support Center 1-800-522-6752 www.tycoelectronics.com

250 Series Receptacles – Straight Insulation Support

Moldable Line

(.250 x .032 [6.35 x 0.81] tab fit)
Stock Thickness: .016 [0.41]

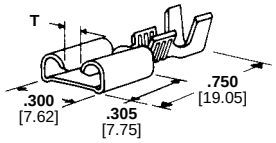

Wire Range AWG	Insulation Diameter	Dimension T	Material and Finish	Terminal Part Numbers	UL	CSA	Quick-Change Applicator No.*
22-18	**.090–.130** 2.29-3.32	**.100** 2.54	Brass	63127-1	—	—	687875-2
18-14	**.120–.170** 3.05-4.32	**.100** 2.54	Brass	60650-1	X	X	466649-2
			Tin Plated Brass	60650-2	X	X	466649-2

Premier Line FASTON Receptacles for Hermetic Header Tabs

(.250 x .032 [6.35 x 0.81] tab fit)
Stock Thickness: .018 [0.46]

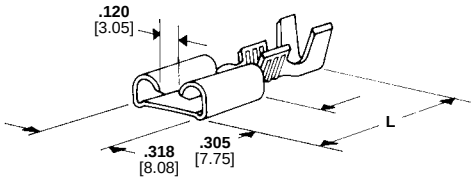

Wire Range AWG	Insulation Diameter	Dimension L	Material and Finish	Terminal Part Numbers	UL	CSA	Quick-Change Applicator No.*
18-14	**.120-.170** 3.05-4.32	**.750** 19.05	Tin Plated Brass[1]	41832	X	X	687823-2
			Tin Plated Phos. Brz.[2]	41774	X	X	687823-2
14-10	**.150-.200** 3.81-5.08	**.770** 19.56	Tin Plated Phos. Brz.[2]	42437-5[3]	X	X	687857-3

[1] Recommended for external use only.
[2] For internal or external use.
[3] 9600 CMA max.

Economy Line (Receptacle and Tab Combination)

(.250 x .032 [6.35 x 0.81] tab fit)

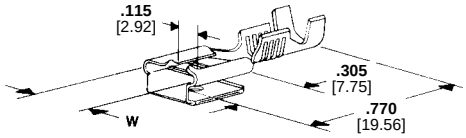

Wire Range AWG	Insulation Diameter	Stock Thickness	Dimensions W	Material and Finish	Terminal Part Numbers	UL	CSA	Quick-Change Applicator No.*
22-18	**.060-.100** 1.52-2.54	**.015** 0.38	**.300** 7.62	Tin Plated Brass	61988-2	X	X	466500-2
18-14	**.120-.170** 3.05-4.32	**.032-.016**[1] 0.81-0.41	**.300** 7.62	Brass	62109-1	X	X	466502-2
				Tin Plated Brass	62109-2	X	X	466502-2
	.120-.170 3.05-4.32	**.015** 0.38	**.300** 7.62	Brass	62223-1[1]	X	X	466502-1

[1] Stress relieved.

***** Quick-Change Applicator for AMP-O-LECTRIC Machine 565435-5. For AMPOMATOR Machine and other machines not listed, consult Tyco Electronics.

For complete product information, order Catalog 82004

Products for Industrial & Commercial Applications
Dimensions are shown for reference purposes only.
Dimensions are in inches and millimeters unless otherwise specified. Values in brackets are metric equivalents.
Specifications subject to change.
Technical Support Center
1-800-522-6752
www.tycoelectronics.com

250 Series Receptacles – Straight Non-Insulation Support

Economy Line

(.250 x .032 [6.35 x 0.81] tab fit)
Stock Thickness: .016 [0.41]

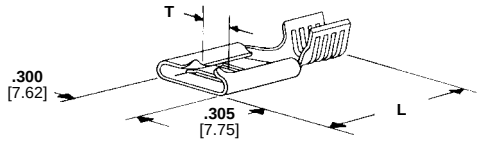

Wire Range AWG	Dimensions L	Dimensions T	Material and Finish	Terminal Part Numbers	UL	CSA	SA	Quick-Change Applicator No.*
18-14	**.595** 15.11	**.115** 2.92	Tin Plated Brass	42845-2	X	—	X	687942-2
	.753 19.13	**.115** 2.92	Tin Plated Brass	60713-1	X	—	X	687942-2

Moldable Line

(.250 x .032 [6.35 x 0.81] tab fit)
Stock Thickness: .016 [0.41]

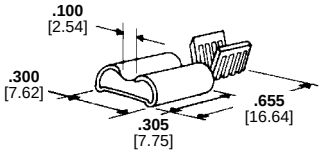

Wire Range AWG	Material and Finish	Terminal Part Number	UL	CSA	SA	Quick-Change Applicator No.*
18-14	Tin Plated Brass	60938-2	X	—	X	687943-2

***** Quick-Change Applicator for AMP-O-LECTRIC Machine 565435-5. For AMPOMATOR Machine and other machines not listed, consult Tyco Electronics.

For complete product information, order Catalog 82004

Products for Industrial & Commercial Applications
Dimensions are shown for reference purposes only.
Dimensions are in inches and millimeters unless otherwise specified. Values in brackets are metric equivalents.
Specifications subject to change.
Technical Support Center
1-800-522-6752
www.tycoelectronics.com

250 Series Receptacle – Flag Tab-Lock Insulation Support

Premier Line Flag

(.250 x .032 [6.35 x 0.81] tab fit)
Insulation Diameter: .110-.210 [2.79-5.33]

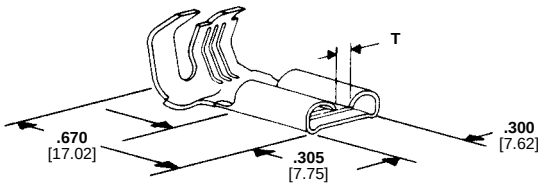

Wire Range AWG	Stock Thickness	Dimension T	Material and Finish	Terminal Part Numbers[1]	UL	CSA	
18-12	**.018** 0.46	**.060** 1.52	Brass	41531	X	—	X
		.065 1.65	Nickel Plated Steel	41531-1	—	X	X
	.016 0.41	**.065** 1.65	Nickel Plated Steel	42404-1	—	X	X

[1] Contact Technical Support Center for Application Tooling.

Budget Line Flag

(.250 x .032 [6.35 x 0.81] tabfit)
Insulation Diameter: .110-.210 [2.79-5.33]
Stock Thickness: .016 [0.41]

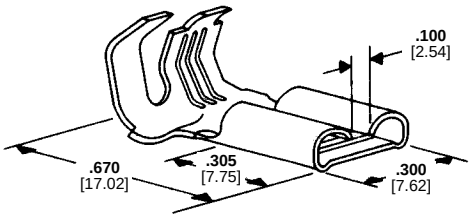

Wire Range AWG	Material and Finish	Terminal Part Numbers[1]	UL	CSA	
18-12	Brass	42511-1	X	—	X
	Tin Plated Brass	42511-2	X	—	X

[1] Contact Technical Support Center for Tooling Application

250 Series Receptacle – Flag Tab-Lock Insulation Support

Low Insertion Force Premier Line Flag

(.250 x .032 tab [6.35 x 0.81] fit)

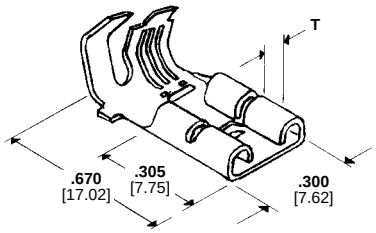

Wire Range AWG	Insulation Diameter	Stock Thickness	Dimension T	Material and Finish	Terminal Part Numbers[1]	UL	CSA
18-12	**.110-.210** 2.79-5.33	**.016** 0.41	**.105** 2.67	Brass	63445-1	X	X
				Tin Plated Brass	63445-2	X	X
				Tin Plated Brass	63445-4[2]	X	X
			.090 2.29	Nickel Plated Steel	63604-1	—	—
		.018 0.46	**.065** 1.65	Tin Plated Brass	63555-2	X	X

[1] Contact Technical Support Center for Application Tooling.
[2] Mates to tab with hole, not dimple.

Moldable Line Flag

(.250 x .032 [6.35 x 0.81] tab fit)

Insulation Diameter: .110–.210 [2.79-5.33]

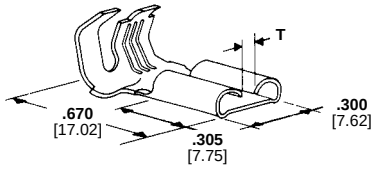

Wire Range AWG	Stock Thickness	Dimension T	Material and Finish	Terminal Part Number[1]	UL	CSA
18-12	**.016** 0.41	**.100** 2.54	Brass	60641-1	X	—	X

[1] Contact Technical Support Center for Application Tooling.
[2] Stress relieved.

Flag FASTON Receptacles for Hermetic Header Tabs

(.250 x .032 [6.35 x 0.81] tab fit)

Insulation Diameter: .110–.210 [2.79-5.33]

Stock Thickmess: .018 [0.46]

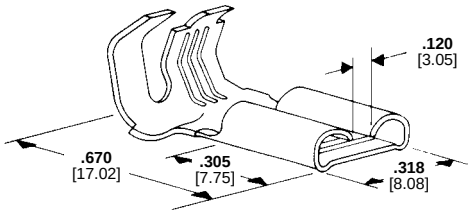

Wire Range AWG	Wire Range CMA	Material and Finish	Terminal Part Numbers[3]	UL	CSA
18-12	—	Tin Plated Phos. Brz.	41800[2]	X	—	X
		Tin Plated Brass	41802[1]	X	—	X
		Silver Plated Phos. Brz.	42041[2]	X	—	X
12-10	6,000–10,600	Silver Plated Brass	60851-2[1]	X	—	X
		Tin Plated Phos. Brz.	42563-8[2]	X	—	X

[1] Recommended for external use only.
[2] For internal or external use.
[3] Contact Technical Support Center for Application Tooling.

For complete product information, order Catalog 82004

Products for Industrial & Commercial Applications
Dimensions are shown for reference purposes only.
Dimensions are in inches and millimeters unless otherwise specified. Values in brackets are metric equivalents.
Specifications subject to change.
Technical Support Center 1-800-522-6752 www.tycoelectronics.com

250 Series – Flag "F-Crimp" Insulation Support

Premier Line Flag

(.250 x .032 [6.35 x 0.81] tab fit)
Stock Thickness: .016 [0.41]

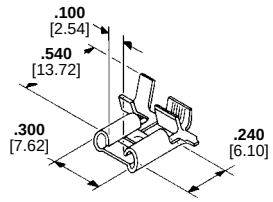

Right Handed Flag

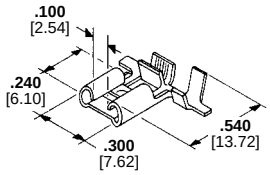

Left Handed Flag

Wire Range AWG	Insulation Diameter	Material and Finish	Terminal Part Numbers	UL	CSA	Quick-Change Applicator No.*
22-18	**.060-.100** 1.52-2.54	Brass	62813-1[1]	X	—	X	466725-2
		Brass	62814-1[2]	X	—	X	466725-2
		Tin Plated Brass	62814-2[2]	X	—	X	466725-2
18-14	**.110-.160** 2.79-4.06	Tin Plated Brass	62811-2[1]	X	—	X	466725-2
		Brass	63011-1[1]	X	—	X	567006-2
		Tin Plated Brass	63011-2[1]	X	—	X	567006-2
		Tin Plated Brass	63012-2[2]	X	—	X	567006-2

[1] Left handed flag.
[2] Right handed flag.

Budget Line Flag

(.250 x .032 [6.35 x 0.81] tab fit)
Stock Thickness: .016 [0.41]

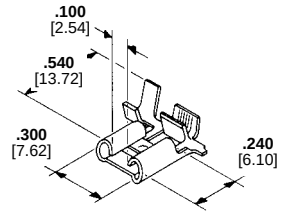

Right Handed Flag

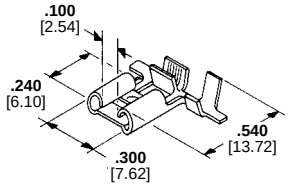

Left Handed Flag

Wire Range AWG	Insulation Diameter	Material and Finish	Terminal Part Numbers	UL	CSA	Quick-Change Applicator No.*
22-18	**.060-.100** 1.52-2.54	Brass	62718-1[2]	X	—	X	466725-2
18-14	**.110-.160** 2.79-4.06	Tin Plated Brass	63009-2[1]	X	—	X	567006-2
		Brass	63010-1[2]	X	—	X	567006-2

[1] Left handed flag.
[2] Right handed flag.

Economy Line Flag

(.250 x .032 [6.35 x 0.81] tab fit)
Stock Thickness: .016 [0.41]

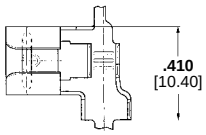

Wire Range AWG	Insulation Diameter	Material and Finish	Terminal Part Number	UL	CSA	Quick-Change Applicator No.*
18-14	**.110-.160** 2.79-4.06	Brass	63096-1	X	—	X	567006-2

Low Insertion Force Line

(.250 x .032 [6.35 x 0.81] tab fit)
Stock Thickness: .016 [0.41]

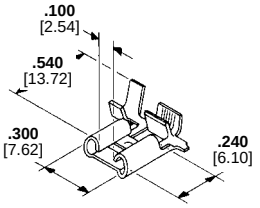

Right Handed Flag

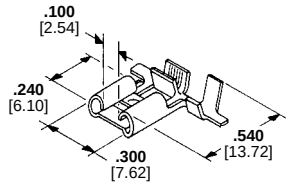

Left Handed Flag

Wire Range AWG	Insulation Diameter	Material and Finish	Terminal Part Numbers	UL	CSA	Quick-Change Applicator No.*
18-14 2(18)	**.110-.200** 2.79-5.08	Brass	63538-1[1]	X	—	X	466678-1
	.110-.160 2.79-4.06	Tin Plated Brass	63901-1[2]	X	—	X	567006-1

[1] Left handed flag. [2]Right handed flag.

***** Quick-Change Applicator for AMP-O-LECTRIC Machine 565435-5. For AMPOMATOR Machine and other machines not listed, consult Tyco Electronics.

For complete product information, order Catalog 82004

Products for Industrial & Commercial Applications
Dimensions are shown for reference purposes only.
Dimensions are in inches and millimeters unless otherwise specified. Values in brackets are metric equivalents.
Specifications subject to change.
Technical Support Center
1-800-522-6752
www.tycoelectronics.com

250 Series – Flag "F-Crimp" Insulation Support

Piggyback Flag

(.250 x .032 [6.35 x 0.81] tab fit)

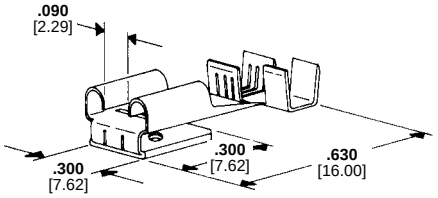

Wire Range AWG	Insulation Diameter	Material and Finish	Terminal Part Numbers	UL	CSA	Standard Applicator No.*
18-14	**.120-.170** 3.05-4.32	Brass	151321-1	X	—	X	575143
		Tin Plated Brass	151321-2	X	—	X	575143

Reversible Flag FASTON Receptacles Straight End Feed

(.250 x .032 [6.35 x 0.81] tab fit)

Stock Thickness: .016 [0.41]

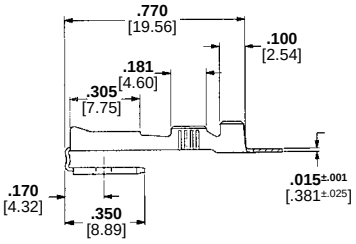

Wire Range AWG	Insulation Diameter	Material and Finish	Terminal Part Number	UL	CSA	Quick-Change Applicator No.*
18-14	**.090-.130** 2.29-3.30	Brass	62048-1	X	—	X	466154-6
		Tin Plated Brass	62048-2			

250 Series Flag Tab-Lok Non-Insulation Support

Economy Line Flag

(.250 x .032 [6.35 x 0.81] tab fit)

Stock Thickness: .016 [0.41]

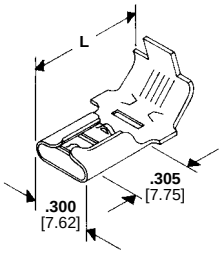

Wire Range AWG	Dimension L	Material and Finish	Terminal Part Number[2]	UL	CSA
12-10 or (2) 14	**.670** 17.02	Tin Plated Brass	62011-2[1]	X	—	X

[1] Right or left handed. Carrier out front for thru splicing.
[2] Contact Technical Support Center for Tooling Application.

Flag FASTON Receptacles for Hermetic Header Tabs

Stock Thickness: .018 [0.46]

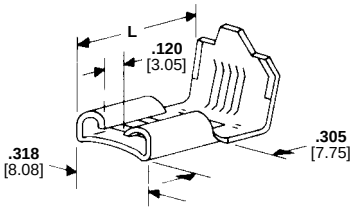

Wire Range AWG	Dimension L	Material and Finish	Terminal Part Numbers[4]	UL	CSA
18-12	**.600** 15.24	Tin Plated Phos. Brz.	62056-6[2]	X	—	X
		Tin Plated Phos. Brz.	62056-7[3]	X	—	X
12-10	**.670** 17.02	Tin Plated Phos. Brz.	62057-8[3]	X	—	X
		Tin Plated Brass	62022-2[1]	X	—	X

[1] Right or left handed. Carrier is in front to facilitate thru splicing.
[2] Right hand. Reverse reel.
[3] Left hand for external or internal use. Reverse reel.
[4] Contact Technical Support Center for Tooling Application.

***** Quick-Change Applicator for AMP-O-LECTRIC Machine 565435-5. For AMPOMATOR Machine and other machines not listed, consult Tyco Electronics.

For complete product information, order Catalog 82004

Products for Industrial & Commercial Applications
Dimensions are shown for reference purposes only.
Dimensions are in inches and millimeters unless otherwise specified. Values in brackets are metric equivalents.
Specifications subject to change.
Technical Support Center
1-800-522-6752
www.tycoelectronics.com

205 Series Receptacles Straight Insulation Support and Straight Non-Insulation Support

Economy Line Insulation Support

Stock Thickness: .012 [0.30]

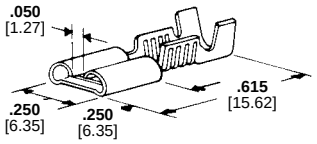

Wire Range AWG	Conf.	Fits Tab	Insulation Diameter	Dimension T	Material and Finish	Terminal Part Numbers	UL	CSA	Quick-Change Applicator No.*
22-18	1	**.020** 0.51	**.085–.125** 2.16-3.18	**.050** 1.27	Brass	42710-1	X	—	X	687927-3
					Tin Plated Brass	42710-2	X	—	X	687927-3

205 Series Flag Tab-Lock Insulation Support

Premier Line Flag

Insulation Diameter: .110–.170 [2.79-4.32]

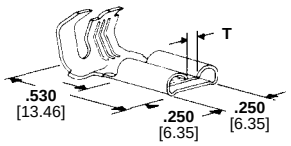

Wire Range AWG	Conf.	Fits Tab	Stock Thickness	Dimension T	Material and Finish	Terminal Part Number[1]	UL	CSA
20-16	1	**.020** 0.51	**.012** 0.30	**.055** 1.40	Tin Plated Brass	42199-2	X	—	X

[1] Consult Technical Support Center for Application Tooling.

Economy Line Flag

Insulation Diameter: .100–.170 [2.54-4.32]

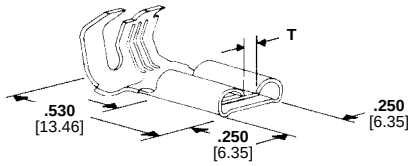

Wire Range AWG	Conf.	Fits Tab	Stock Thickness	Dimension T	Material and Finish	Terminal Part Numbers[1]	UL	CSA
20-14	1	**.032** 0.81	**.016** 0.41	**.025** 0.64	Brass	60195-1[2]	X	—	X
					Tin Plated Brass	60195-2[2]	X	—	X

[1] Consult Technical Support Center for Application Tooling.
[2] Moldable.

***** Quick-Change Applicator for AMP-O-LECTRIC Machine 565435-5. For AMPOMATOR Machine and other machines not listed, consult Tyco Electronics.

For complete product information, order Catalog 82004

Products for Industrial & Commercial Applications
Dimensions are shown for reference purposes only.
Dimensions are in inches and millimeters unless otherwise specified. Values in brackets are metric equivalents.
Specifications subject to change.
Technical Support Center 1-800-522-6752 www.tycoelectronics.com

187 Series Receptacles – Straight Insulation Support

Premier Line

Stock Thickness: .012 [0.30]

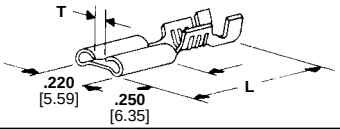

Wire Range AWG	Fits Tab	Insulation Diameter	Dimensions L	Dimensions T	Material and Finish	Terminal Part Numbers	UL	CSA	SP	Quick-Change Applicator No.*
24-20	**.020** 0.51	**.040-.070** 1.02-1.78	**.590** 14.99	**.060** 1.52	Brass	60573-2	X[1]	—	X[1]	687852-2
					Tin Plated Phos. Brz.	62187-2	X	—	X	687852-2
	.020 0.51	**.060-.110** 1.52-2.79	**.585** 14.86	**.060** 1.52	Brass	62138-2	X[1]	—	X[1]	687938-2
	.032 0.81	**.040-.070** 1.02-1.78	**.590** 14.99	**.060** 1.52	Tin Plated Brass	62181-1	X[1]	—	X[1]	687852-2
	.020 0.51	**.040-.070** 1.02-1.78	**.585** 14.86	**.060** 1.52	Tin Plated Brass	1217129-1	X[1]	—	X[1]	687938-2
20-16	**.020** 0.51	**.090-.130** 2.29-3.30	**.590** 14.99	**.060** 1.52	Nickel Plated Steel	60621-1	—	X	X	687928-2
	.020 0.51	**.060-.110** 1.52-2.79	**.585** 14.86	**.060** 1.52	Tin Plated Brass	62137-2	X	—	X	687928-2
18-16 or (2) 18	**.032** 0.81	**(2) .105 max.** 2.67	**.590** 14.99	**.040** 1.02	Tin Plated Brass	61945-1	X	—	X	687870-2

[1] UL listed and CSA certified for 22-20 AWG

Budget Line

Insulation Diameter: .090–.130 [2.29-3.30]

Stock Thickness: .012 [0.30]

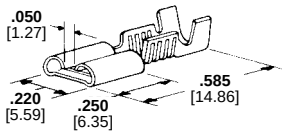

Wire Range AWG	Fits Tab	Material and Finish	Terminal Part Numbers	UL	CSA	SP	Quick-Change Applicator No.*
20-16	**.020** 0.51	Brass	42617-1	X	—	X	687928-2
		Nickel Plated Steel	63959-1	—	X	X	687928-2
	.032 0.81	Brass	61919-1	X	—	X	687928-2

Economy Line

Stock Thickness: .012 [0.30]

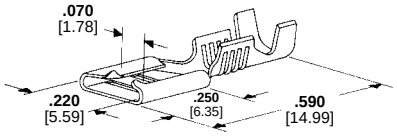

Wire Range AWG	Fits Tab	Insulation Diameter	Material and Finish	Terminal Part Numbers	UL	CSA	SP	Quick-Change Applicator No.*
20-16	**.020** 0.51	**.090-.130** 2.29-3.30	Brass	42801-1	X	—	X	687928-2
	.032 0.81	**.090-.130** 2.29-3.30	Brass	60196-1	X	—	X	687928-2
			Tin Plated Brass	60196-2	X	—	X	687928-2
	.039 0.99	**.090-.130** 2.29-3.30	Tin Plated Brass	63751-1	—	—	—	687928-2

Low Insertion Force Line — Premier

Stock Thickness: .012 [0.30]

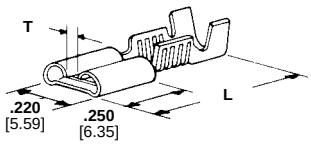

Wire Range AWG	Insulation Diameter	Fits Tab	Dimensions L	Dimensions T	Material and Finish	Terminal Part Numbers	UL	SP	Quick-Change Applicator No.*
20-16	**.090-.130** 2.29-3.30	**.032** 0.81	**.585** 14.86	**.072** 1.83	Tin Plated Brass	63608-2	X	X	687928-2
						63477-1	X	X	687928-2

***** Quick-Change Applicator for AMP-O-LECTRIC Machine 565435-5. For AMPOMATOR Machine and other machines not listed, consult Tyco Electronics.

For complete product information, order Catalog 82004

Products for Industrial & Commercial Applications
Dimensions are shown for reference purposes only.
Dimensions are in inches and millimeters unless otherwise specified. Values in brackets are metric equivalents.
Specifications subject to change.
Technical Support Center 1-800-522-6752
www.tycoelectronics.com

187 Series Receptacles – Straight Insulation Support

Low Insertion Force Line — Budget

Stock Thickness: .012 [0.30]

Wire Range AWG	Insulation Diameter	Fits Tab	Dimensions L	Dimensions T	Material and Finish	Terminal Part Numbers	UL	CSA	Quick-Change Applicator No.*
20-16	**.090-.130** 2.29-3.30	**.020** 0.51	**.585** 14.86	**.052** 1.32	Tin Plated Brass	63475-2	X	X	687928-2
		.032 0.81	**.585** 14.86	**.072** 1.83	Tin Plated Brass	63477-2	X	X	687928-2

Commercial Line

Stock Thickness: .014 [0.36]

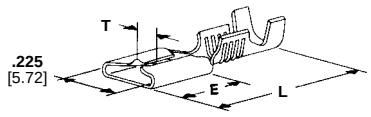

Wire Range AWG	Fits Tab	Insulation Diameter	Dimensions L	Dimensions E	Dimensions T	Material and Finish	Terminal Part Numbers	UL	VDE	CSA	Quick-Change Applicator No.*
18-14	**.020** 0.51	**.150-.190** 3.81-4.83	**.640** 16.26	**.250** 6.35	**.030** 0.76	Brass	62016-1	X	—	X	466300-2
	.032 0.81	**.150-.190** 3.81-4.83	**.640** 16.26	**.250** 6.35	**.030** 0.76	Pre-Tin Brass	63697-1	X	—	X	466300-2
18-14 or 2 (16)	**.020** 0.51	**.180-.230** **(2) .110 max**	**.640** 16.26	**.250** 6.35	**.030** 0.76	Tin Plated Brass	60742-2	X	—	X	466409-2
	.032 0.81	4.57-5.84 or (2) 2.79 max				Brass	63596-1	X	—	X	466409-2

Moldable Line

Insulation Diameter: .090–.130 [2.29-3.30]

Stock Thickness: .012 [0.30]

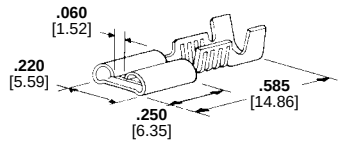

Wire Range AWG	Fits Tab	Material and Finish	Terminal Part Numbers	UL	VDE	CSA	Quick-Change Applicator No.*
20-16	**.020** 0.51	Brass	60214-1	X	—	X	687928-2
		Tin Plated Brass	60214-2	X	—	X	687928-2

Commercial Line (Receptacle and Tab Combination)

Tab Stock Thickness: .020 [0.51]

Receptacle Stock Thickness: .014 [0.36]

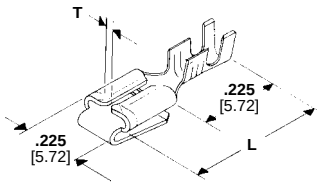

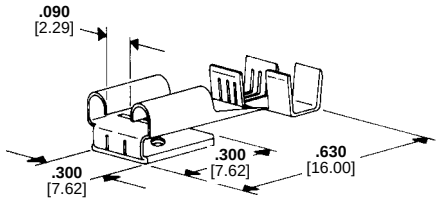

Wire Range AWG	Fits Tab	Insulation Diameter	Dimensions L	Dimensions T	Material and Finish	Terminal Part Numbers	UL	VDE	CSA	Quick-Change Applicator No.*
20-16	**.020** 0.51	**.090-.130** 2.29-3.30	**.615** 15.62	**.030** 0.76	Brass	62026-2	X	—	X	466503-4
					Tin Plated Brass	63646-2	X	—	X	
	.032 0.81	**.090-.130** 2.29-3.30	**.615** 15.62	**.030** 0.76	Brass	63646-1	X	—	X	

***** Quick-Change Applicator for AMP-O-LECTRIC Machine 565435-5. For AMPOMATOR Machine and other machines not listed, consult Tyco Electronics.

For complete product information, order Catalog 82004

Products for Industrial & Commercial Applications
Dimensions are shown for reference purposes only.
Dimensions are in inches and millimeters unless otherwise specified. Values in brackets are metric equivalents.
Specifications subject to change.
Technical Support Center 1-800-522-6752 www.tycoelectronics.com

187 Series Receptacles – Straight Non-Insulation Support

Moldable Line

Stock Thickness: .012 [0.30]

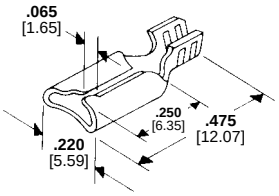

Wire Range AWG	Fits Tab	Material and Finish	Terminal Part Number	UL	CSA	Quick-Change Applicator No.*
20-16	**.032** 0.81	Tin Plated Brass	61969-1	X	—	X	687933-2

187 Series Flag Tab-Lock Insulation Support

Premier Line Flag

Stock Thickness: .012 [0.30]

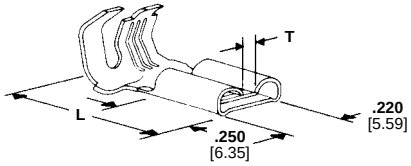

Wire Range AWG	Fits Tab	Insulation Diameter	Dimensions L Max.	Dimensions T	Material and Finish	Terminal Part Number[1]	UL	CSA
20-16	**.032** 0.81	**.110–.170** 2.79-4.32	**.530** 13.46	**.038** 0.97	Nickel Plated Steel	63696-1	—	X	—

[1] Consult Technical Support Center for Tooling Application.

Budget Line Flag

Stock Thickness: .012 [0.30]

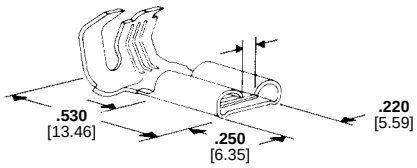

Wire Range AWG	Fits Tab	Insulation Diameter	Dimensions L Max.	Dimensions T	Material and Finish	Terminal Part Number[1]	UL	CSA
20-16	**.020** 0.51	**.110-.170** 2.79-4.32	**.530** 13.46	**.050** 1.27	Brass	42618-1	X	—	X

[1] Consult Technical Support Center for Tooling Application.

Economy Line Flag

Insulation Diameter:
.110–.170 [2.79-4.32]
Stock Thickness: .012 [0.30]

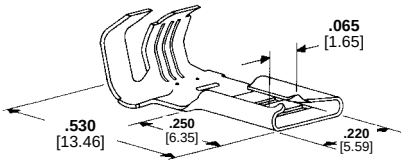

Wire Range AWG	Fits Tab	Material and Finish	Terminal Part Numbers[1]	UL	CSA
20-16	**.020** 0.51	Tin Plated Brass	42800-2	X	—	X
	.032 0.81	Brass	60529-1	X	—	X
		Tin Plated Brass	60529-2	X	—	X

[1] Consult Technical Support Center for Tooling Application.

***** Quick-Change Applicator for AMP-O-LECTRIC Machine 565435-5. For AMPOMATOR Machine and other machines not listed, consult Tyco Electronics.

For complete product information, order Catalog 82004

Products for Industrial & Commercial Applications
Dimensions are shown for reference purposes only.
Dimensions are in inches and millimeters unless otherwise specified. Values in brackets are metric equivalents.
Specifications subject to change.
Technical Support Center
1-800-522-6752
www.tycoelectronics.com

187 Series – Flag Tab-Lock Insulation Support

Low Insertion Force Flag

Insulation Diameter: .110–.170 [2.79-4.32]
Stock Thickness: .012 [0.30]

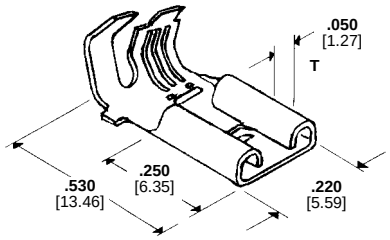

Wire Range AWG	Fits Tab	Dimension T	Material and Finish	Terminal Part Numbers[1]	UL	CSA
20-16	**.020** 0.51	**.052** 1.32	Brass	63476-1	X	X
			Tin Plated Brass	63476-2	X	X
	.032 0.81	**.072** 1.83	Brass	63748-1	X	X

[1] Consult Technical Support Center for Tooling Application.

Moldable Line Flag

Insulation Diameter: .110–.170 [2.79-4.32]
Stock Thickness: .012 [0.30]

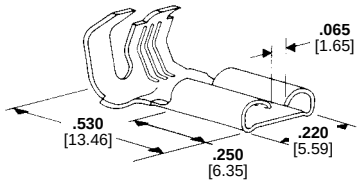

Wire Range AWG	Fits Tab	Material and Finish	Terminal Part Numbers[1]	UL	CSA
20-16	**.020** 0.51	Brass	61029-1	X	X
		Tin Plated Brass	61029-2	X	X

[1] Consult Technical Support Center for Tooling Application.

187 Series Flag "F-Crimp" Receptacles

187 Series Center Strip Flag Insulation Support

Stock Thickness: .016 [0.41]

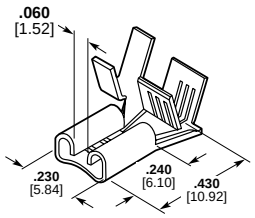

Wire Range AWG	Fits Tab	Insulation Diameter	Material and Finish	Terminal Part Numbers	UL	CSA	Quick-Change Applicator No.*
20-16	**.020** 0.51	**.110-.170** 2.79-4.32	Tin Plated Brass	63417-2	X	X	567288-2
18-14	**.020** 0.51	**.060-.150** 1.52-3.81	Brass	63512-1	X	X	819528-1

187 Series Commercial Line Flag Insulation Support

Stock Thickness: .012 [0.30]

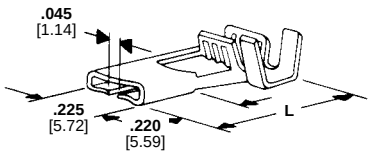

Wire Range AWG	Fits Tab	Insulation Diameter	Dimension L	Material and Finish	Terminal Part Numbers	UL	CSA	Quick-Change Applicator No.*
22-18	**.020** 0.51	**.060-.070** 1.52-1.78	**.535** 13.59	Tin Plated Brass	62085-2	X	X	687801-3
20-16	**.020** 0.51	**.090-.130** 2.29-3.30	**.545** 13.84	Tin Plated Brass	60755-2	X	X	686262-5

***** Quick-Change Applicator for AMP-O-LECTRIC Machine 565435-5. For AMPOMATOR Machine and other machines not listed, consult Tyco Electronics.

For complete product information, order Catalog 82004

Products for Industrial & Commercial Applications
Dimensions are shown for reference purposes only.
Dimensions are in inches and millimeters unless otherwise specified. Values in brackets are metric equivalents.
Specifications subject to change.
Technical Support Center
1-800-522-6752
www.tycoelectronics.com

110 Series Receptacles – Straight Insulation Support

Faston Receptacles

Stock Thickness: .010 [0.25]

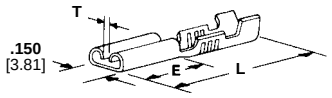

Wire Range AWG	Fits Tab Type	Fits Tab	Insulation Diameter	Dimensions L	E	T	Material and Finish	Terminal Part Numbers	UL	CSA	VDE	Quick-Change Applicator No.*
24-22	1	**.016** 0.41	**.040-.060** 1.02-1.52	**.635** 16.13	**.250** 6.35	**.025** 0.64	Pre-Tin Brass	42415-1	—	—	—	687896-2
22-18	1	**.016** 0.41	**.060-.100** 1.52-2.54	**.635** 16.13	**.250** 6.35	**.025** 0.64	Pre-Tin Brass	60118-1	—	—	—	687892-3
		.025 0.64	**.120-.140** 3.05-3.56	**.635** 16.13	**.250** 6.35	**.020** 0.51	Pre-Tin Brass	61158-1	—	—	—	687967-3
		.032 0.81	**.060-.100** 1.52-2.54	**.635** 16.13	**.250** 6.35	**.025** 0.64	Pre-Tin Brass	60197-1	X	—	X	687892-3
	3	**.032** 0.81	**.060-.100** 1.52-2.54	**.635** 16.13	**.250** 6.35	**.025** 0.64	Pre-Tin Brass	60577-1	—	—	X	687892-3
	1	**.020** 0.51	**.060-.100** 1.52-2.54	**.635** 16.13	**.250** 6.35	**.025** 0.64	Nickel Plated Steel	1217102-1	X	—	X	466141-2
		.032 0.81	**.120-.140** 3.05-3.56	**.635** 16.13	**.250** 6.35	**.020** 0.51	Pre-Tin Brass	62050-1	X	—	X	466060-3
20-16	2	**.032** 0.81	**.120-.140** 3.05-3.56	**.635** 16.13	**.250** 6.35	**.025** 0.64	Pre-Tin Brass	63703-1	X	—	X	466060-3

[1] UL listed 22 AWG wire only.

Commercial Line (Receptacle and Tab Combination)

Tab Thickness: .020 [0.51]

Receptacle Stock Thickness: .010 [0.25]

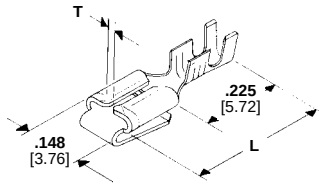

Wire Range AWG	Fits Tab	Insulation Diameter	Dimensions L	T	Material and Finish	Terminal Part Numbers	UL	CSA	VDE	Quick-Change Applicator No.*
22-18	**.018** 0.46	**.080-.120** 2.03-3.05	**.630** 16.00	**.025** 0.64	Brass	63242-1	X	—	X	466501-2
	.025 0.64	**.080-.120** 2.03-3.05	**.600** 15.24	**.025** 0.64	Brass	1217083-1	X	—	X	466501-2
	.032 0.81	**.080-.120** 2.03-3.05	**.600** 15.24	**.025** 0.64	Brass	1217145-1	X	—	X	466501-2

110 Series Receptacles – Straight Non-Insulation Support

Faston Receptacles

Stock Thickness: .010 [0.25]

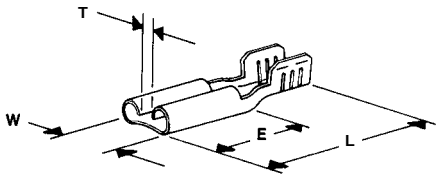

Wire Range AWG	Fits Tab Type	Fits Tab	Dimensions W	L	E	T	Material and Finish	Terminal Part Numbers	UL	CSA	VDE	Quick-Change Applicator No.*
26-22	1	**.016** 0.41	**.138** 3.51	**.327** 8.31	**.140** 3.56	**.028** 0.71	Brass	1217198-1	—	—	—	466090-2
		.020 0.51	**.138** 3.51	**.327** 8.31	**.140** 3.56	**.028** 0.71	Tin Plated Brass	63837-1	X	—	X	466090-2
20-18 or (2) 20	1	**.020** 0.51	**.148** 3.76	**.475** 12.07	**.250** 6.35	**.028** 0.71	Pre-Tin Brass	42399-1	X	—	X	687954-2
		.032 0.81	**.148** 3.76	**.475** 12.07	**.250** 6.35	**.028** 0.71	Pre-Tin Brass	60601-1	X	—	X	687954-2
20-18	1, 2, 3	**.020** 0.51	**.148** 3.76	**.380** 9.65	**.200** 5.08	**.028** 0.71	Tin Plated Brass	62850-2[1]	X	—	X	687954-2

[1] No dimple.

***** Quick-Change Applicator for AMP-O-LECTRIC Machine 565435-5. For AMPOMATOR Machine and other machines not listed, consult Tyco Electronics.

For complete product information, order Catalog 82004

110 Series – "F-Crimp" Insulation Support

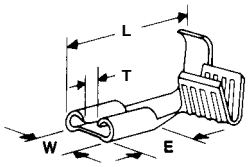

A
Fits Tab Type 1

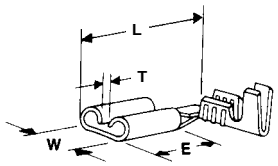

B
Fits Tab Type 1

Wire Range AWG	Style	Fits Tab	Insulation Diameter	Stock Thickness	Dimensions W	L Max.	E	T	Material and Finish	Terminal Part Numbers	UL	CSA	Quick-Change Applicator No.*
22-18	A	**.016** 0.41	**.065-100** 1.65-2.54	**.010** 0.25	**.148** 3.76	**.460** 11.68	**.200** 5.08	**.030** 0.76	Pre-Tin Brass	61459-1	—	—	466299-4
		.025 0.64	**.065-100** 1.65-2.54	**.010** 0.25	**.148** 3.76	**.460** 11.68	**.200** 5.08	**.032** 0.81	Pre-Tin Brass	61530-1	—	—	466299-4
		.032 0.81	**.065-.100** 1.65-2.54	**.010** 0.25	**.148** 3.76	**.460** 11.68	**.200** 5.08	**.030** 0.76	Pre-Tin Brass	61971-1	X	X	466299-4
	B	**.020** 0.51	**.060-.100** 1.65-2.54	**.012** 0.25	**.148** 3.76	**.430** 11.68	**.200** 5.08	**.030** 0.76	Brass	61070-2	X	X	687113-3
		.025 0.64	**.060-.100** 1.65-2.54	**.010** 0.25	**.148** 3.76	**.430** 11.68	**.200** 5.08	**.035** 0.89	Pre-Tin Brass	1217138-1	X	X	466415-2
		.032 0.81	**.060-.100** 1.65-2.54	**.010** 0.25	**.148** 3.76	**.430** 11.68	**.200** 5.08	**.035** 0.89	Pre-Tin Brass	62336-1	X	X	466415-2

110 Series – "Flag-Crimp" Non-Insulation Support

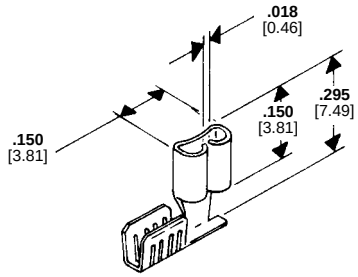

Wire Range AWG	Fits Tab Type	Fits Tab	Stock Thickness	Material and Finish	Terminal Part Numbers	UL	CSA	Quick-Change Applicator No.*
22-16	1	**.020** 0.51	**.010** 0.25	Pre-Tin Brass	62321-1	X[1]	—	X	466377-2
	—	**.020** 0.51	**.010** 0.25	Pre-Tin Brass	63233-1	X	—	X	466377-2

[1] UL listed and CSA certified for 22-18 AWG wire range.

***** Quick-Change Applicator for AMP-O-LECTRIC Machine 565435-5. For AMPOMATOR Machine and other machines not listed, consult Tyco Electronics.

For complete product information, order Catalog 82004

Products for Industrial & Commercial Applications
Dimensions are shown for reference purposes only.
Dimensions are in inches and millimeters unless otherwise specified. Values in brackets are metric equivalents.
Specifications subject to change.
Technical Support Center
1-800-522-6752
www.tycoelectronics.com

FASTON Tabs



Tyco Electronics offers a complete product line of printed circuit, crimp tabs and printed circuit board receptacles.

Printed circuit board tabs are available in .110, .187, and .250 widths with various heights. Printed circuit tab configurations are: vertical, right angle, and angled. The legs are designed for soldering in thru-hole applications. The legs can also be clinched automatically in our insertion equipment for additional mechanical retention. Other tab mounting to a printed circuit board can be by rivets or screws.

AMP printed circuit board tabs are designed to accept FASTON and Ultra-Fast crimp receptacle products. These items are listed in this catalog on page 24.

Printed circuit board vertical receptacles are available in .250/.205 widths and will accept tab thicknesses of .025 and .032. The printed circuit board receptacles can easily be inserted semi or fully automatically. The legs of the receptacles can be clinched after insertion into the printed circuit board for additional mechanical strength. Printed circuit board receptacles can accept tab thicknesses of .025-.032, and are available in standard or low insertion force. These receptacles are designed to accept FASTON or Ultra-Fast crimp tabs as well as automotive fuses.

AMP Modular insertion equipment to install the printed circuit board tabs and receptacles can be found in Tyco Electronics Catalog 296059. Semi and fully automatic insertion equipment utilize the same insertion heads with a change over time of about 15 minutes.

AMP tab and receptacle product is also compatible with most industry insertion equipment.

For complete product information, order Catalog 82004

Products for Industrial & Commercial Applications
Dimensions are shown for reference purposes only.
Dimensions are in inches and millimeters unless otherwise specified. Values in brackets are metric equivalents.
Specifications subject to change.
Technical Support Center
1-800-522-6752
www.tycoelectronics.com

250 Series FASTON Tabs – Stud Mount

Stock Thickness: .032 [0.81]
Dimple (Both Sides)

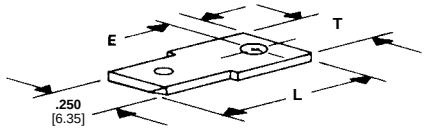

A

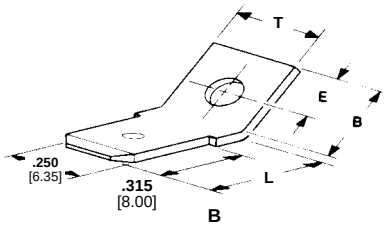

B

Style	Stud Diameter	Dimensions B	L	E	T	Material and Finish	Terminal Part Numbers	UL	CSA	SP
A	**.177** 4.50	—	**.715** 18.16	**.170** 4.32	**.295** 7.49	Brass	63038-2	—	X	—
						Tin Plated Brass	63038-1	—	X	X
	—	—	**.635** 16.13	—	**.295** 7.49	Nickel Plated Steel	42559-1	—	X	X
B	**.130** 3.30	**.300** 7.62	**.400** 10.16	**.170** 4.32	**.295** 7.49	Tin Plated Brass	42822-2	—	X	X
	.145 3.68	**.300** 7.62	**.400** 10.16	**.170** 4.32	**.295** 7.49	Tin Plated Brass	42822-4	—	X	X
	.171 4.34	**.375** 9.53	**.331** 8.41	**.170** 4.32	**.295** 7.49	Brass	60465-1	—	X	X
						Tin Plated Brass	60465-3	—	X	X
	.197 5.00	**.330** 8.38	**.375** 9.53	**.170** 4.32	**.295** 7.49	Tin Plated Brass	61499-1	—	X	X
	.203 5.16	—	**.375** 9.52	**.132** 3.35	**.295** 7.49	Tin Plated Brass	1217252-1	—	X	X

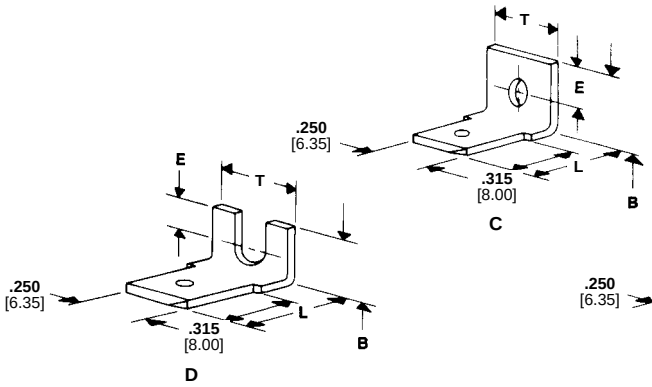

C D E

Style	Stud Diameter	Dimensions B	L	E	T	Material and Finish	Terminal Part Numbers	UL	CSA	SP
C	**.097** 2.46	**.250** 6.35	**.440** 11.18	**.093** 2.36	**.295** 7.49	Brass	41339	—	X	X
	.130 3.30	**.330** 8.38	**.440** 11.18	**.170** 4.32	**.295** 7.49	Tin Plated Brass	42095-1	—	X	X
	.171 4.34	**.330** 8.38	**.440** 11.18	**.170** 4.32	**.295** 7.49	Brass	42214-1	—	X	X
D	**.171** 4.34	**.330** 8.38	**.440** 11.18	**.120** 3.05	**.205** 5.21	Brass	62166-1	—	X	X
E	**.130** 3.30	**.068** 1.73	**.615** 15.62	**.093** 2.36	**.295** 7.49	Tin Plated Brass	42506-2	—	X	X

For complete product information, order Catalog 82004

Products for Industrial & Commercial Applications
Dimensions are shown for reference purposes only.
Dimensions are in inches and millimeters unless otherwise specified. Values in brackets are metric equivalents.
Specifications subject to change.
Technical Support Center
1-800-522-6752
www.tycoelectronics.com

250 Series FASTON Tabs – Stud Mount

Stock Thickness: .032 [0.81]
Dimple (Both Sides)

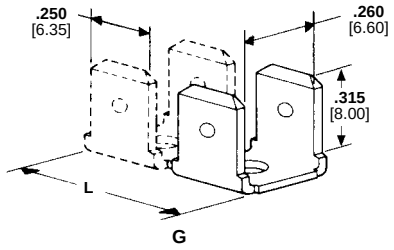

Style	Pairs	Stud Diameter	Dimension L	Material and Finish	Terminal Part Numbers	UL	CSA	VDE
G	1	**.097** 2.46	**.315** 8.00	Tin Plated Brass	60080-2	—	X	X
	1	**.130** 3.30	**.315** 8.00	Brass	41290	—	X	X
				Tin Plated Brass	41480	—	X	X
	2	**.130** 3.30	**.690** 17.53	Tin Plated Brass	41481	—	X	X
				Brass	41291	—	X	X
	3	**.130** 3.30	**1.065** 27.05	Brass	41292	—	X	X
	4	**.130** 3.30	**1.440** 36.58	Brass	41370	—	X	X
	—	**.130** 3.30	—	Tin Plated Brass	42115-4[1]	—	X	X
	1	**.171** 4.34	**.315** 8.00	Brass	41619	—	X	X
				Tin Plated Brass	42802-1	—	X	X

[1] In continuous strip-form.

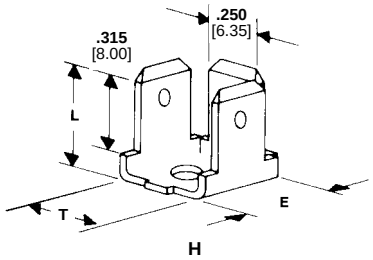

Style	Stud Diameter	Dimensions L	Dimensions E	Dimensions T	Material and Finish	Terminal Part Number	UL	CSA	VDE
H	**.130** 3.30	**.425** 10.80	**.406** 10.31	**.470** 11.94	Brass	62261-1	—	X	X

For complete product information, order Catalog 82004

Products for Industrial & Commercial Applications
Dimensions are shown for reference purposes only.
Dimensions are in inches and millimeters unless otherwise specified. Values in brackets are metric equivalents.
Specifications subject to change.
Technical Support Center
1-800-522-6752
www.tycoelectronics.com

250 Series FASTON Tabs – Wire Crimp

Tab Thickness: .032 [0.81]

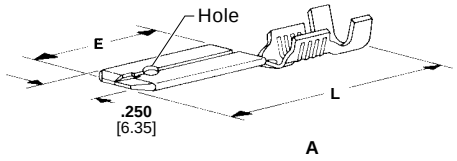

A

Wire Range AWG	Style	Insulation Diameter	Stock Thickness	Dimensions L	Dimensions E	Material and Finish	Terminal Part Numbers	UL	CSA	TÜV	Quick-Change Applicator No.*
22-18	A	**.080-.120** 2.03-3.05	**.016** 0.41	**.815** 20.70	**.370** 9.40	Tin Plated Brass	42475-4	—	X	X	466432-2
18-14	A	**.110-.150** 2.79-3.81	**.016** 0.41	**.810** 20.57	**.370** 9.40	Brass	42474-3	—	X	X	466431-2
						Tin Plated Brass	42474-4	—	X	X	466431-2
14-12	A	**.110-.170** 2.79-4.32	**.016** 0.41	**.810** 20.57	**.370** 9.40	Silver Plated Brass	61362-2	—	X	X	466467-4

250 Series FASTON Tabs – Printed Circuit Board

Stock Thickness: .032 [0.81]
Board Hole Size: .055 ± .002 [1.40 ± 0.05] on Centers
[1]Loose Piece Board Hole Size: .060 ± .053 [1.52 ± 1.35] on Centers

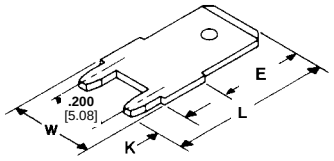

Material and Finish	Dimensions W	Dimensions L	Dimensions K	Dimensions E	Terminal Part Numbers	UL	TÜV	CSA
Tin Plated Brass	**.295** 7.49	**.622** 15.80	**.125** 3.18	**.312** 7.92	62409-1[1]	—	X	X
	.280 7.11	**.622** 15.80	**.125** 3.18	**.452** 11.48	63755-1[2]	—	—	—
	.312 7.92	**.650** 16.50	**.150** 3.81	**.410** 10.41	1217126-1	—	—	X
	.312 7.92	**.582** 14.78	**.180** 4.57	**.312** 7.92	1217136-1	—	—	X
	.312 7.92	**.780** 19.81	**.150** 3.81	**.540** 13.72	1217167-1	—	—	X

[1] Loose piece only.
[2] Insertion equipment available.

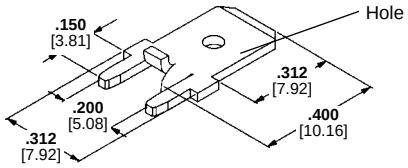

Material and Finish	Terminal Part Number	UL	TÜV	CSA
Tin Plated Brass	63849-1[1]	—	X	X

[1] Loose piece only

***** Quick-Change Applicator for AMP-O-LECTRIC Machine 565435-5. For AMPOMATOR Machine and other machines not listed, consult Tyco Electronics.

For complete product information, order Catalog 82004

Products for Industrial & Commercial Applications
Dimensions are shown for reference purposes only.
Dimensions are in inches and millimeters unless otherwise specified. Values in brackets are metric equivalents.
Specifications subject to change.
Technical Support Center
1-800-522-6752
www.tycoelectronics.com

250 Series FASTON Printed Circuit Board Receptacle

.250/.205 Printed Circuit Board Receptacle

Stock Thickness: .020 [0.51]

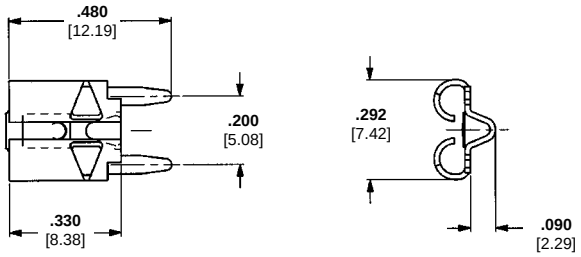

Material and Finish	Fits Tab	Strip Part Numbers	UL	CSA	SEV
Tin	**.032** (LIF) 0.81	63968-1	—	X	X
		63969-1	—	X	X
	.020 0.51	63994-1	—	X	X
Tin Plated Brass	**.025** 0.64	1217137-1	—	X	X
		1217180-1	—	X	X

205 Series FASTON Tabs – Printed Circuit Board Only*

Stock Thickness: .020 [0.51]
*Tab Configuration 1

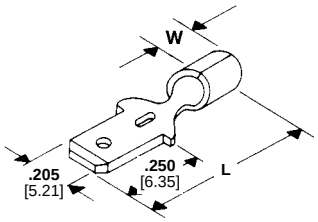

Board Hole Size	Dimensions L	Dimensions W	Material and Finish	Terminal Part Number	UL	CSA	SEV
.100-.095 Dia. 2.54-2.41	**.545** 13.84	**.160** 4.06	Tin Plated Brass	60284-2[1]	—	X	X

[1] Loose piece only.

For complete product information, order Catalog 82004

Products for Industrial & Commercial Applications
Dimensions are shown for reference purposes only.
Dimensions are in inches and millimeters unless otherwise specified. Values in brackets are metric equivalents.
Specifications subject to change.
Technical Support Center 1-800-522-6752
www.tycoelectronics.com

187 Series FASTON Tabs

Stud Mount Type Tabs
Hole In Tab

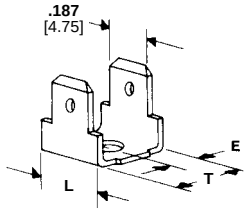

A

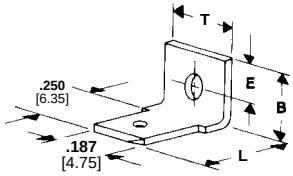

C

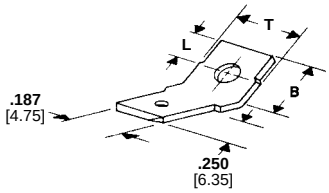

D

Style	Stud Diameter	Stock Thickness	Dimensions L	E	T	B	Material and Finish	Terminal Part Numbers	UL	CSA	TÜV
A	**.130** 3.30	**.020** 0.51	**.295** 7.49	**.217** 5.51	**.435** 11.05	—	Tin Plated Brass	61951-1	—	X	X
C	**.145** 3.68	**.020** 0.51	**.320** 8.13	**.125** 3.18	**.295** 7.49	**.300** 7.62	Tin Plated Brass	61407-3	—	X	X
D	**.130** 3.30	**.020** 0.51	—	**.125** 3.18	**.295** 7.49	**.300** 7.62	Tin Plated Brass	61761-2[1]	—	X	X
	.145 3.68	**.020** 0.51	—	**.125** 3.18	**.295** 7.49	**.300** 7.62	Brass	62576-1[1]	—	X	X

[1] Bent 45°

Wire Crimp Type Tabs

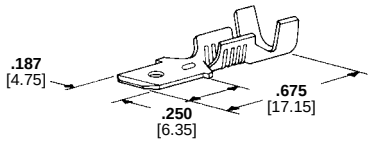

Wire Range AWG	Tab Thickness	Insulation Diameter	Material and Finish	Terminal Part Numbers	UL	CSA	TÜV	Quick-Change Applicator No.*
22-18	**.020** 0.51	**.080-.120** 2.03-3.05	Brass	42490-4	X	—	X	466441-5
18-14	**.020** 0.51	**.120-.150** 3.05-3.81	Tin Plated Brass	60850-2	X	—	X	466444-2

***** Quick-Change Applicator for AMP-O-LECTRIC Machine 565435-5. For AMPOMATOR Machine and other machines not listed, consult Tyco Electronics.

For complete product information, order Catalog 82004

Products for Industrial & Commercial Applications
Dimensions are shown for reference purposes only.
Dimensions are in inches and millimeters unless otherwise specified. Values in brackets are metric equivalents.
Specifications subject to change.
Technical Support Center 1-800-522-6752
www.tycoelectronics.com

187 Series FASTON PCB Tabs

Printed Circuit Board Tabs

Stock Thickness: .020 [0.51]

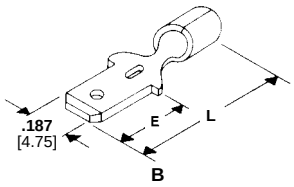

Type	Board Thickness	Dimensions T	L	E	H	Material and Finish	Terminal Part Number	UL	CSA	VDE
B	**.062** 1.57	—	**.545** 13.84	**.250** 6.35	—	Pre-Plated Brass	61907-1[1]	—	X	X

[1] Loose piece only.

Printed Circuit Board Tab

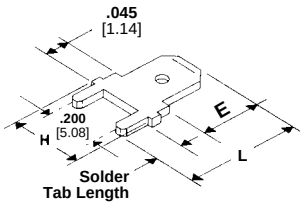

Tab Thickness	Solder Tab Length	Dimensions L	E	H	Material and Finish	Terminal Part Numbers	UL	CSA	VDE
.032 0.81	**.125** 3.18	**.487** 12.37	**.250** 6.35	**.280** 7.11	Tin Plated Brass	63525-1[1]	—	X	X
.020 0.51	**.125** 3.18	**.487** 12.37	**.250** 6.35	**.280** 7.11	Tin Plated Brass	63603-1[2]	—	X	X

[1] Dimple
[2] .055 Hole

Printed Circuit Board Tab

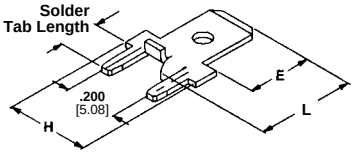

Tab Thickness	Solder Tab Length	Dimensions L	E	H	Material and Finish	Terminal Part Number	UL	CSA	VDE
.020 0.51	**.150** 3.81	**.490** 12.45	**.250** 6.35	**.312** 7.92	Tin Plated Brass	63982-1[2]	—	X	X

[2] .055 Hole

Right Angle Printed Circuit Board Tab

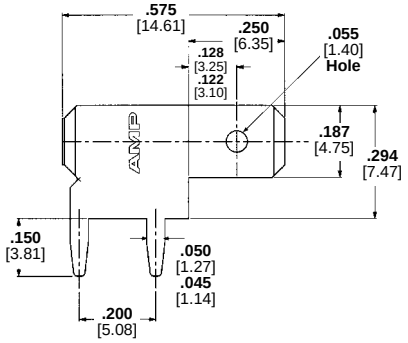

Stock Thickness	Board Hole Size	Material and Finish	Terminal Part Number	UL	CSA	VDE
.020 0.51	**.054** 1.37 / **.050** 1.27	Tin Plated Brass	1217156-1[2]	—	—	—

[2] .055 Hole

For complete product information, order Catalog 82004

Products for Industrial & Commercial Applications
Dimensions are shown for reference purposes only.
Dimensions are in inches and millimeters unless otherwise specified. Values in brackets are metric equivalents.
Specifications subject to change.
Technical Support Center
1-800-522-6752
www.tycoelectronics.com

110 Series FASTON Tabs

.110 Series Wire Crimp Type Tabs

Stock Thickness: .020 [0.51]

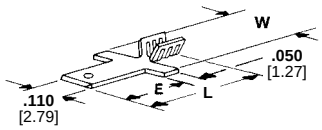

Wire Range AWG	Dimensions L	E	W	Material and Finish	Terminal Part Number	UL	CSA	Quick-Change Applicator No.*
22-18	**.565** 14.35	**.280** 7.11	**.155** 3.94	Pre-Tin Brass	62384-1	X	—	X	466508-2

.110 Series Printed Circuit Board Only

Stock Thickness: .020 [0.51]

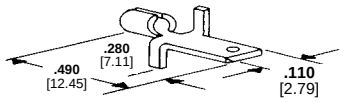

A

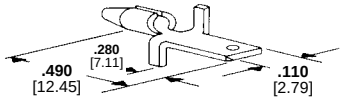

B

Style	Mating Hole Diameter	Dimension L	Material and Finish	Terminal Part Numbers	UL	CSA	CSA
A	**.060-.055** 1.52-1.40	**.490** 12.45	Tin Brass	61134-3[1]	—	X	X
B	**.067-.063** 1.70-1.60	**.490** 12.45	Tin Brass	62437-1[1]	—	X	X

[1] Loose piece only.

***** Quick-Change Applicator for AMP-O-LECTRIC Machine 565435-5. For AMPOMATOR Machine and other machines not listed, consult Tyco Electronics.

For complete product information, order Catalog 82004

Products for Industrial & Commercial Applications
Dimensions are shown for reference purposes only.
Dimensions are in inches and millimeters unless otherwise specified. Values in brackets are metric equivalents.
Specifications subject to change.
Technical Support Center 1-800-522-6752
www.tycoelectronics.com

250 Series FASTON Tabs

The AMP high-temperature tab is designed to crimp to heating element wire. The tab end protrudes through a ceramic/high-temperature housing for mating with a standard 250 or FASTON receptacle.

Stock Thickness: .032

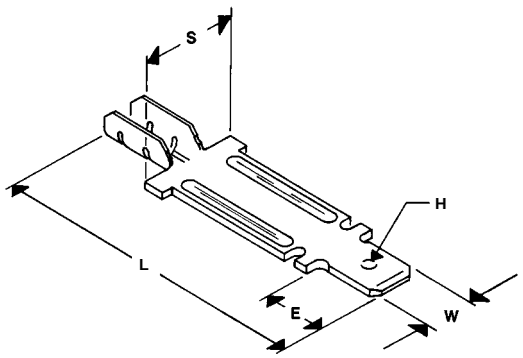

Series	Solid Wire Range AWG	Tab Thickness	Dimensions					Material and Finish	Terminal Part Number[1]
			L	W	E	S	H		
250	20-15	**.032** 0.81	**1.500** 38.10	**.250** 6.35	**.312** 7.92	**.500** 12.70	Dimple	Nickel Plated Steel	63301-1

[1] Contact Customer Assistance Hotline for Tooling Application.

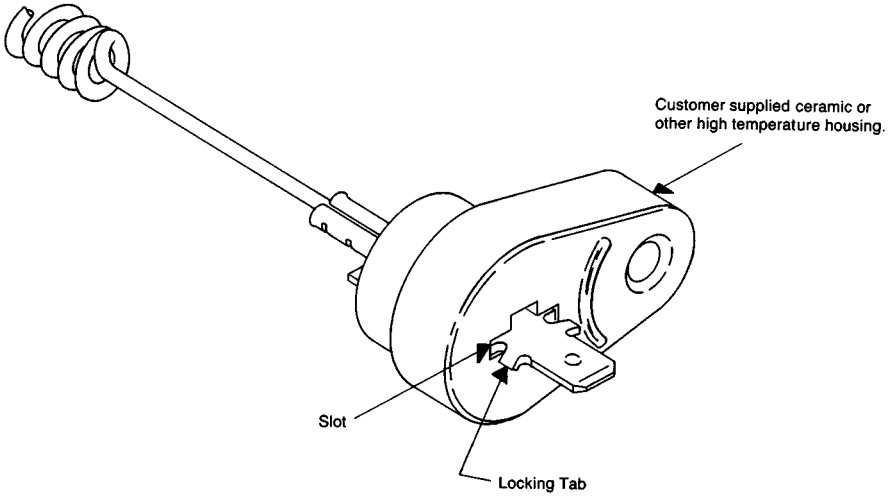

Recommended Housing Dimensions	
Slot = H x W	L
.070 x .390 1.78 x 9.91	**.640** 16.26

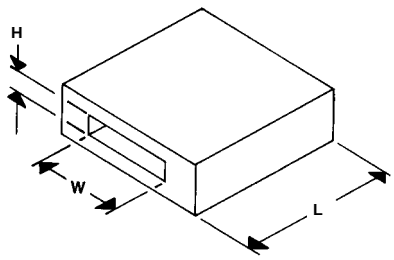

For complete product information, order Catalog 82004

Products for Industrial & Commercial Applications
Dimensions are shown for reference purposes only.
Dimensions are in inches and millimeters unless otherwise specified. Values in brackets are metric equivalents.
Specifications subject to change.
Technical Support Center
1-800-522-6752
www.tycoelectronics.com

250 Series Test Tabs

250 Series Test Tabs Mate with all "250" Series FASTON Receptacles

Test Tabs

The mechanical tab is mounted onto AMP gauge 100505 for testing of receptacle insertion/ extraction requirements. Double-ended test tabs are also available for electrical and temperature rise testing. Tyco Electronics has readily available a variety of NEMA DC2 constructed tabs for mechanical testing of FASTON, Ultra-Fast and Positive Lock receptacles. These tabs are designed for electrical test setups as outlined in UL 310. (See instruction sheet 408-7432 for recommended procedure mechanical test)

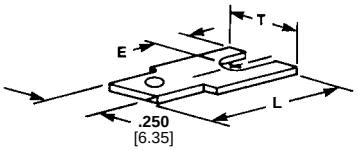

Mechanical
A

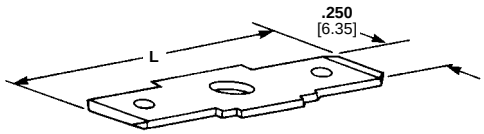

Electrical
B

Style	Stud Diameter	Dimensions			Material and Finish	Terminal Part Numbers
		L	E	T		
B	**.145** 3.68	**1.010** 25.65	—	—	Tin Plated Steel	62627-1
					Brass	62627-2

187 Series Test Tabs

187 Series Test Tabs Mates with all "187" Series Receptacles

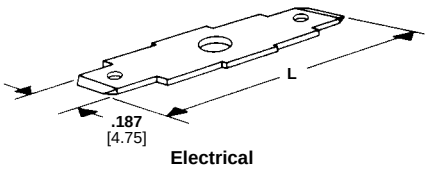

Electrical
B

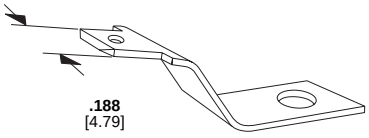

C

Style	Pairs	Stud Diameter	Stock Thickness	Dimension	Material and Finish	Terminal Part Numbers
				L		
B	1	**.145** 3.68	**.020** 0.51	**1.276** 32.41	Brass	60920-1
C	—	**.145** 3.68	**.032** 0.81	—	Brass	62162-1

110 Series Test Tabs

110 Series Test Tabs Mates with all "110" Series Receptacles

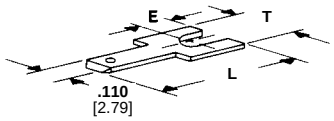

Mechanical
A

Style	Stud Diameter	Stock Thickness	Dimensions			Material and Finish	Terminal Part Numbers
			L	E	T		
A	**.125** 3.18	**.020** 0.51	**.570** 14.48	**.090** 2.29	**.295** 7.49	Brass	62061-1
	.125 3.18	**.032** 0.81	**.570** 14.48	**.090** 2.29	**.295** 7.49	Brass	62061-2

For complete product information, order Catalog 82004

Products for Industrial & Commercial Applications
Dimensions are shown for reference purposes only.
Dimensions are in inches and millimeters unless otherwise specified. Values in brackets are metric equivalents.
Specifications subject to change.
Technical Support Center
1-800-522-6752
www.tycoelectronics.com

FASTON Terminals – Loose Piece

FASTON Terminals Strip/Loose Piece Cross Reference

Faston terminals have been designed for speed of application using selected terminating machines; however, hand tools are available for those terminals listed.

Receptacles 250 Series

Wire Range AWG	Strip Part Numbers	Loose Piece Part Numbers	Description	Hand Tool Part Numbers
22-18	—	60878-2	Premier Receptacle	90166-1
	—	62274-1	Receptacle/Tab Combination	90166-1
18-14	—	60705-1	Premier Receptacle	—
	—	60279-1	Piggyback Receptacle	—
18-12	—	41898	Tab-Lok Flag	—
	—	60102-1	Tab-Lok Flag	—
16-12	—	42021	Premier Receptacle	47094
14-10	—	61227-1	Premier Receptacle	90120
	62049-2	—	Piggyback	—
12-10	—	60851-3	Hermetic Flag	—

Receptacles 187 Series

Wire Range AWG	Strip Part Number	Loose Piece Part Number	Description	Hand Tool Part Number
20-16	—	42638-2	Premier (No Insulation)	—

Receptacles 110 Series

Wire Range AWG	Strip Part Number	Loose Piece Part Number	Description	Hand Tool Part Number
22-18	—	62112-2	Receptacle/Tab Combination	—

250 Series Tabs

Wire Range AWG	Strip Part Number	Loose Piece Part Number	Description	Hand Tool Part Number
18-14	—	41778	Crimp Type	—

FASTON Tab Adapters

250 Series FASTON Tab Adapters

Fits Tab: .032 [0.81]

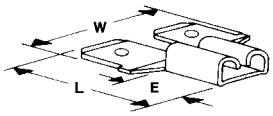

A

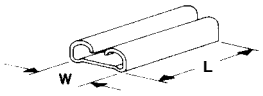

B

Style	Dual Thickness	Dimensions W	Dimensions L	Dimensions E	Material and Finish	Terminal Part Numbers	UL	CSA	VDE
A	**.018-.032** 0.46-0.81	**.650** 16.51	**.770** 19.56	**.305** 7.75	Brass	61765-1	—	X	—
					Tin Plated Brass	61765-2[1]	—	X	—
B	—	**.300** 7.62	**.700** 17.78	—	Tin Plated Brass	61810-2	—	X	—

[1] No Tab stop on Receptacle

187 Series FASTON Tab Adapters

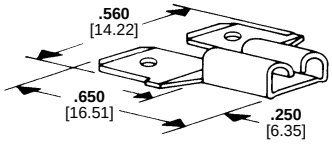

Stock Thickness	Receptacle Fits Tab	Material and Finish	Terminal Part Numbers	UL	CSA	VDE
.013 x .020 0.33 x 0.51	**.020** 0.51	Tin Plated Brass	61045-2	—	X	X
.013 x .032 0.33 x 0.81	**.032** 0.81	Tin Plated Brass	63699-1	—	X	—

For complete product information, order Catalog 82004

Products for Industrial & Commercial Applications
Dimensions are shown for reference purposes only.
Dimensions are in inches and millimeters unless otherwise specified. Values in brackets are metric equivalents.
Specifications subject to change.
Technical Support Center 1-800-522-6752 www.tycoelectronics.com

FASTON Tab Receptacles

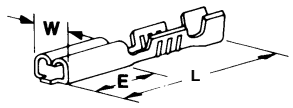

B

Type	Wire Range AWG	Wire Range mm²	Insul. Dia. Range	Stock Thk.	Material and Finish	Fits Tab	Dimensions E	Dimensions L	Dimensions W	Part Numbers	Hand Tool No.	Applicator No.
B	24-20	0.2-0.6	**.040-.080** 1.02-2.03	**.010** 0.25	Tin Plated Brass	**.031 x .062** 0.79 x 1.57	**.187** 4.75	**.462** 11.73	**.090** 2.29	60900-4[1]	—	466449-2
	22-18	0.3-0.9	**.050-.085** 1.27-2.16	**.010** 0.25	Pre-Tin Brass	**.010 x .093** 0.25 x 2.36	**.190** 4.83	**.480** 12.19	**.120** 3.05	63391-1[2,3]	90204-5	—

[1] Reverse reel of 60900-1.
[2] Loose piece form, of Part No. 63391-2.
[3] Compliant base.

FASTON Tab Caps and Splices

Tab Caps 187 and 250 Series

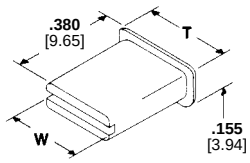

Tab Size	Material	UL 94[1]	Color	Dimensions T	Dimensions W	Insulator Part Numbers
"187" Series .020 [0.51] Thick	Nylon	V2	Natural	**.320** 8.13	**.260** 6.60	360041-1
"250" Series .032 [0.81] Thick	Nylon	V2	Natural	**.380** 9.65	**.320** 8.13	360042-1

[1] Flammability rating.

For complete product information, order Catalog 82004

Products for Industrial & Commercial Applications
Dimensions are shown for reference purposes only.
Dimensions are in inches and millimeters unless otherwise specified. Values in brackets are metric equivalents.
Specifications subject to change.
Technical Support Center 1-800-522-6752 www.tycoelectronics.com

FASTON Receptacle Housings

AMPIP Post-Insulation Pods

Flag Style Receptacle Housings

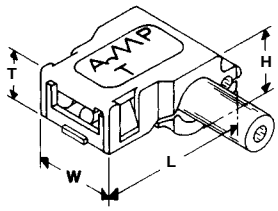

A
.250 Series

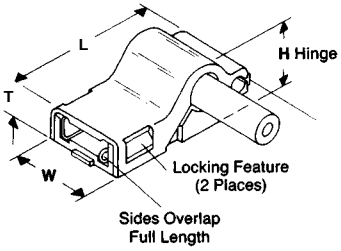

B
.250 Series

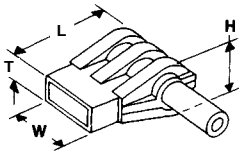

C
.250 Series

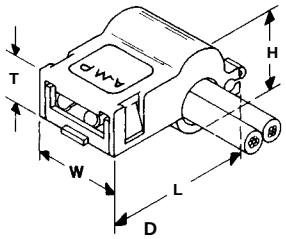

D
.187 Series

Style	Type	Material	UL 94[1]	Color	Insulation Dia. Max.	Dimensions L	T	W	H	Part Number	Accepts Terminal[2]	UL	CSA
A	Loose Piece	Nylon	V2	Natural	**.210** 5.33	**.787** 19.99	**.266** 6.76	**.448** 11.38	**.360** 9.14	1-480307-1	"250" Series Flag FASTON Tab-Lok Receptacles 41531, 41532, 42511,	X	X
B	Continuous Strip / Loose Piece	Nylon	V2	Natural	**.140 or (2) .110** 3.56 or (2) 2.79	**.732** 18.59	**.180** 4.57	**.460** 11.68	**.315** 8.00	1-480306-1	"250" Series Flag FASTON F-Crimp Receptacle 60290, 60736, 62418	X	X
C	Loose Piece	Vinyl	HB	Blue	**.150** 3.81	**.710** 18.03	**.210** 5.33	**.380** 9.65	**.400** 10.16	480019-6	"250" Series Flag FASTON	—	—
D	Loose Piece	Nylon	V2	Natural	**.175** 4.45	**.699** 17.75	**.230** 5.84	**.430** 10.92	**.320** 8.13	1-480487-2	"187" Series Flag FASTON[3]	X	—

[1] Flammability rating of plastic material.
[2] For dimensions and plating, refer to Terminal Specifications on pages 7077-7089.
[3] Does not accept commercial series.

Straight Style Receptacle Housing

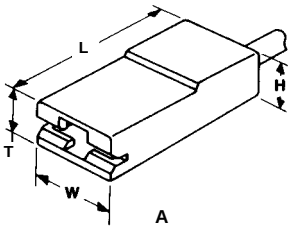

A
.250 Series

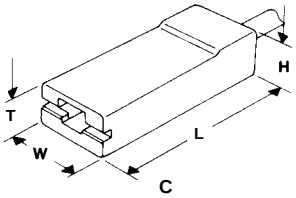

C
.205/.187 Series

Style	Type	Material	UL 94[1]	Color	Insulation Dia. Max.	Dimensions L	T	W	H	Part Number	Accepts Terminal[2]	UL	CSA
A	Loose Piece	Nylon	V2	Black	**.200** 5.08	**.920** 23.37	**.260** 6.60	**.390** 9.91	**.298** 7.57	1-480416-1	"250" Series FASTON Receptacles 41143, 41194, 41202, 41274, 41771, 41772, 42285, 42400, 42510, 42640, 42643, 60650, 60938, 61107, 61368, 61375, 63306, 63365	X	X
C	Loose Piece	Nylon	V2	Natural	**.180** 4.57	**.775** 19.69	**.225** 5.72	**.338** 8.59	**.245** 6.22	1-480418-0	"205" Series FASTON Receptacles 42197, 42198, 42710, 42712[3], 42713, 60904, 60523	X	X

[1] Flammability rating of plastic material.
[2] For dimensions and plating, refer to Terminal Specifications on pages 7077-7089.
[3] Except 42712-3.

For complete product information, order Catalog 82004

Products for Industrial & Commercial Applications
Dimensions are shown for reference purposes only.
Dimensions are in inches and millimeters unless otherwise specified. Values in brackets are metric equivalents.
Specifications subject to change.
Technical Support Center 1-800-522-6752 www.tycoelectronics.com

FASTON Receptacle Housings

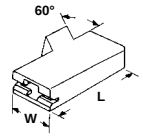

V
.110/.187 Series

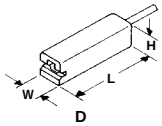

.110 Series

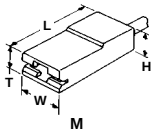

.250 Series

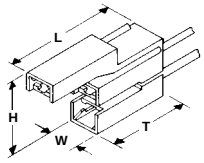

.187 Series

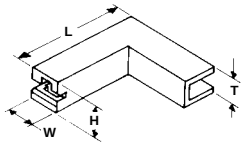

.110 Series

Style	Type	Material	UL 94[1]	Color	Insulation Dia. Max.	Dimensions L	T	W	H	Part Numbers	Accepts Terminal[2]		
V	Loose Piece	Nylon / Stanyl	V2	Natural	—	**.825** 20.95	—	**.290** 7.37	—	520978-1	".110" Series FASTON 42067, 42608, 42236,42398, 42399, 42415, 42604, 60118, 60197, 60577, 60601, 60729, 61158, 61400, 61457, 61818, 62050, 62094, 62191, 62345 ".187 Series FASTON 42452, 42453, 42373, 42374, 42616, 60487, 60573, 62137, 62187, 63475, 63477, 40617, 60573, 62137, 62138	X	X
D	Loose Piece	Nylon	V2	Black	**.150** 3.81	**.790** 20.07	—	**.235** 5.97	**.240** 6.10	1-480417-1	"110" Series FASTON Receptacles 42067, 42608, 42236, 42398, 42399, 42415, 42604, 60118, 60197, 60577, 60601, 60729, 61158, 61400, 61457, 61818, 62050, 62094, 62191, 62345	X	X
E	Loose Piece	Nylon	V2	Natural	**.170** 4.32	**1.655** 42.04	**.845** 21.46	**.317** 8.05	**.875** 22.23	520212-1	"187" Series FASTON Receptacles 42452, 42453, 42373, 42374, 42617, 60487, 60573, 62137, 62187	X	X
F	Loose Piece	Nylon	V2	Natural	—	**.550** 13.97	**.205** 5.21	**.225** 5.72	**.200** 5.08	360040-1	"110" Series FASTON 61070, 61481, 62336	X	X
M	Loose Piece	Nylon	V2	Natural	—	**1.030** 26.162	**.265** 6.731	**.375** 9.526	—	521053-1	".250" Series FASTON 41143, 41194, 41202, 41274, 41771, 41772, 42285, 42400, 42510, 42640, 42643, 60650, 60938, 61107, 61368, 61375, 63306, 63365, 63365-1	X	X

[1] Flammability rating of plastic materials.
[2] For dimensions and plating, refer to terminal specifications on pages 7077-7091.

Defrost Timer Housing

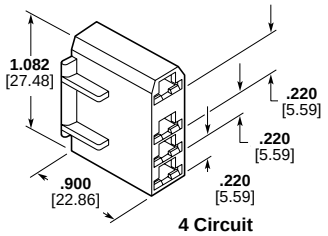

4 Circuit
.250 Series
FASTON Housing

Material	UL 94[1]	Color	Part Numbers	Accepts Terminals		
Nylon	V2	Black	520987-1	.250 Low Insertion Terminals	X	X
		Natural	520987-2	.250 Low Insertion Terminals	X	X

[1] Flammability rating of plastic material.

For complete product information, order Catalog 82004

Products for Industrial & Commercial Applications
Dimensions are shown for reference purposes only.
Dimensions are in inches and millimeters unless otherwise specified. Values in brackets are metric equivalents.
Specifications subject to change.
Technical Support Center 1-800-522-6752 www.tycoelectronics.com

FASTON Receptacle Housings

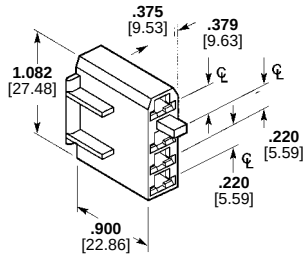

Material	UL 94[1]	Color	Part Numbers	Accepts Terminals		
Nylon	V2	Natural	521065-1	.250 LIF	X	X
			521066-1	.250 LIF	X	X

[1] Flammability rating of plastic material.

250 Series Housing

Water Valve Coil Connector

This connector is designed to mate with the Appliance Industry's Standard Water Valve Coil. The connector is suitable for such applications as washing machine mixing valves, dishwasher fill valves, and refrigerators with automatic ice makers. The housing has a unique internal cavity design to accommodate either two Positive Lock or two Budget and LIF FASTON receptacles.

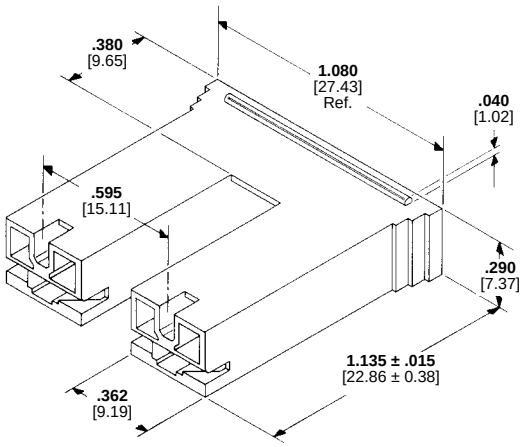

Product Facts

- **Prevents terminal back-out of housing through plastic retention feature**
- **Higher disengagement forces possible with Positive Lock or Low Insertion Force (LIF) FASTON receptacles (Hole required in mating tab)**
- **Recognized under the Component Program of Underwriters Laboratories, Inc., File Nos. E28476 and E13288.**

Material	UL 94[3]	Color	Part Numbers	Accepts Terminals[1]		
Nylon	V2	Natural	520935-1	"250" Series FASTON with .095 min "T" Receptacles 42400, 42510, 63097[2], 63119[2], 63239[2], 63306	X	X
		Red	520935-2			
		Black	520935-3[4]			

[1] For dimensions and plating, refer to Terminal Specifications on pages 7077 thru 7091.
[2] For Positive Lock Mark II Receptacles.
[3] Flammability rating of plastic material.
[4] Weather resistant material.

Recommended Mating Tab Dimensions

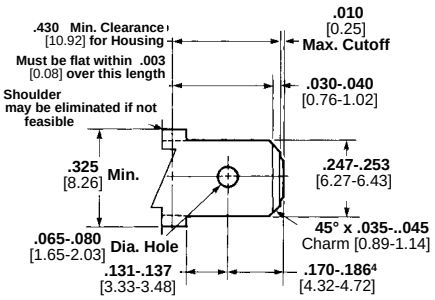

[4] Use when shoulder is eliminated.

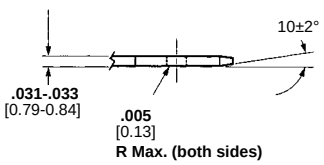

For complete product information, order Catalog 82004

FASTIN-FASTON Line

FASTIN-FASTON Connectors

These are the multiple-connector version of the basic FASTON Line. Primarily used as harness connectors, they make possible simultaneous and quick attachment of up to eight separate circuits with a maximum of 19 leads. Some housings can be panel mounted or left free-hanging and is ideally suited for such applications as electric ranges, washers, dryers and other appliances and automotive wiring. Receptacles and tabs, with the exception of small locking lances to help retention in housing, are similar to those in the FASTON Line. FASTIN-FASTON connectors are CSA approved and recognized under the component program of Underwriters Laboratories Inc.

Notes: Temperature range of housing is rated at up to 125°C to permit use of assembly in areas of relatively high temperatures. Circuits are identified by numbered points on both male and female housings.

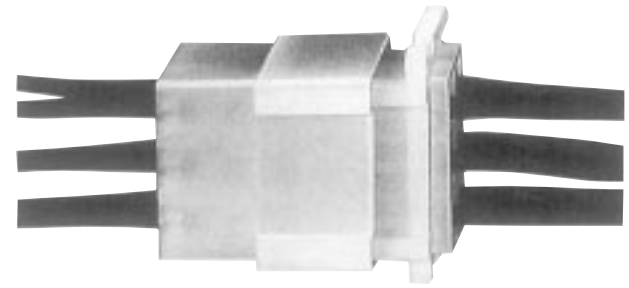





250 Series FASTIN-FASTON Connectors

Single Circuit Connectors (Housings)

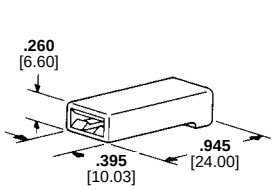

RECEPTACLE HOUSING

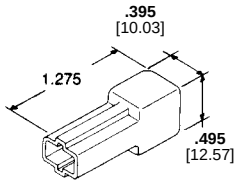

TAB HOUSING

Material	UL 94[1]	Color	Part Numbers			
			Receptacle	Tab		
Nylon	V2	Black	480054-4	—	X	X
		Red	480054-5	480053-5	X	X

[1] Flammability rating.

Receptacles (For use with single circuit connectors)

Fits Tab: .032 [0.81]
Stock Thickness: .016 [0.41]
Mating Dimple

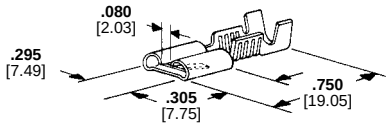

Wire Range AWG	Insulation Diameter	Material and Finish	Terminal Part Numbers			Quick-Change Applicator No.*
18-14	**.120-.160** 3.05-4.06	Tin Plated Brass	42281-2	X	X	687940-2
		Brass	60634-1[1]	X	X	687940-2
16-12	**.160-.220 or (2) .130 Max.** 4.06-5.59 or (2) 3.30 Max.	Tin Plated Brass	60249-2[2]	X	X	466057-2

[1] No front slot.
[2] Also capable of accepting (2) 16 AWG wire.

Tabs (For use with single or multiple circuit connectors)

Stock Thickness: .015 [0.38]

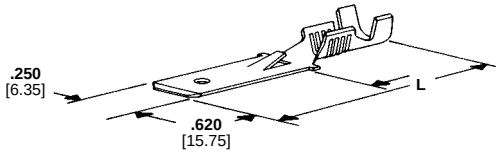

Wire Range AWG	Tab Thickness	Insulation Diameter	Dimension L	Material and Finish	Terminal Part Number			Quick-Change Applicator No.*
18-14	**.016** 0.41	**.120-.145** 3.05-3.68	**1.100** 27.94	Tin Plated Brass	42580-2[1]	X	X	687839-2

[1] Used for back-to-back with a combined thickness of .032.

***** Quick-Change Applicator for AMP-O-LECTRIC Machine 565435-5. For AMPOMATOR Machine and other machines not listed, consult Tyco Electronics.

For complete product information, order Catalog 82004

Products for Industrial & Commercial Applications
Dimensions are shown for reference purposes only.
Dimensions are in inches and millimeters unless otherwise specified. Values in brackets are metric equivalents.
Specifications subject to change.
Technical Support Center 1-800-522-6752
www.tycoelectronics.com

250 Series FASTIN-FASTON Connectors

Six Circuit Connectors (Housings)

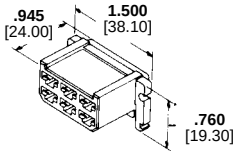

Receptacle Housing

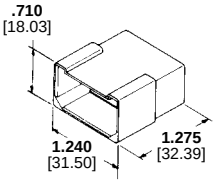

Tab Housing

Material	UL 94[1]	Color	Part Numbers			
			Receptacle	Tab		
Nylon	V2	Natural	480003-5	480004-5	X	X

[1] Flammability rating.

8 Circuit Connectors (Housings)

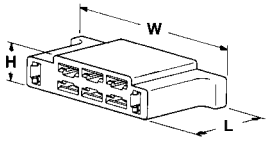

Mating Face

Eight Circuit Connectors (Receptacle Housing)

Material	UL 94[1]	Color	Dimensions			Housing Number		
			W	H	L			
Nylon	V2	Natural	**2.125** 53.98	**.525** 13.34	**.945** 24.00	480173-1	X	X

[1] Flammability rating of plastic material.
[2] All circuits accept receptacles without locking dimple.

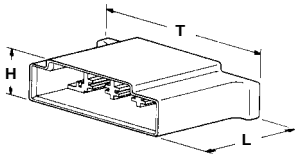

Mating Face

Eight Circuit Connectors (Tab Housings)

Material	UL 94[1]	Color	Dimensions			Housing Number		
			W	H	L			
Nylon	V2	Natural	**2.240** 56.90	**.658** 16.71	**1.275** 32.39	480174-1	X	X

[1] Flammability rating.

Positive Lock Receptacles

Product Facts

- Reduced insertion force
- Locks onto tabs containing holes
- Housing insulates and serves as a removal tool
- "Snap" action tells assembler receptacle is mated properly
- Mark I 250 Series accepts 20-10 AWG wire
- Mark II 187 Series accepts 24-16 AWG wire, while 250 Series accepts 22-10 AWG wire
- Mark III 250 Series accepts 18-12 AWG wire
- Terminated by automatic or semi-automatic equipment
- Single and multiple circuit housings available
- Recognized under the Component Program of Underwriters Laboratories Inc., File Nos. E66717 and E28476
- Certified by Canadian Standards Association File No. LR7189A

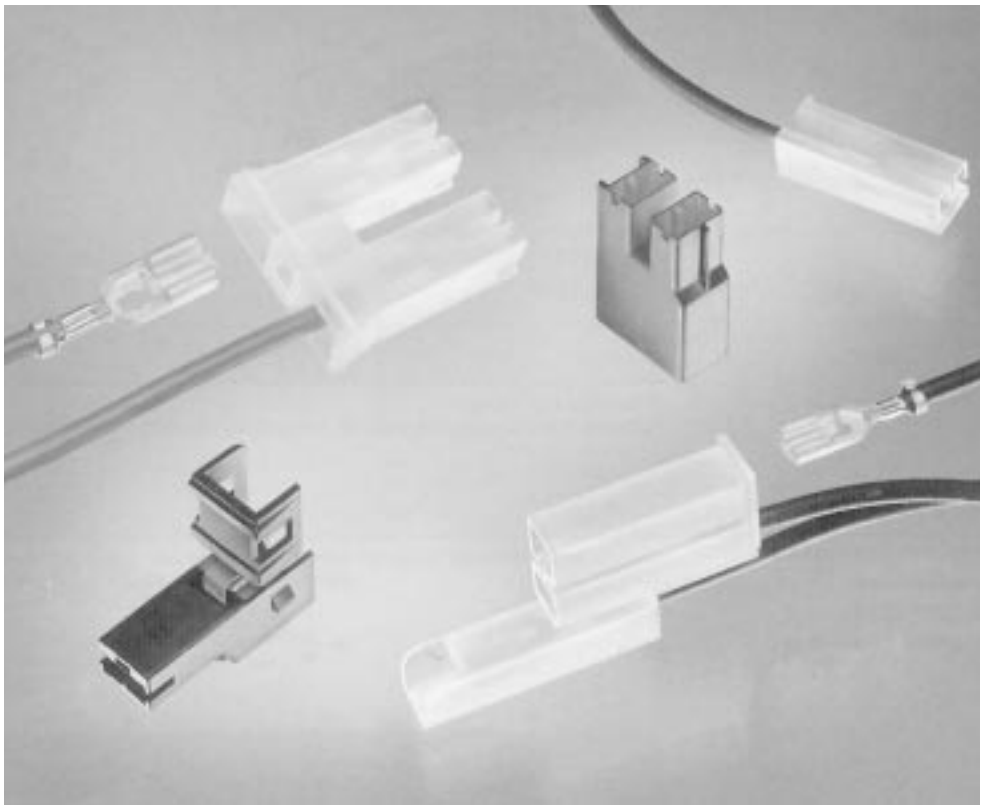

Positive Lock receptacles are specifically designed to provide ease of assembly and secure retention to mating tabs. These unique features are attainable by the reduced insertion force of the product and the locking dimple. The receptacle locks onto mating tabs containing holes and is removable only by deflecting an integrally designed depressor prior to withdrawal. The depressor can be deflected manually by thumb pressure, or automatically by a cam inside a specially designed nylon housing. If the housing is employed, removal of the terminal from the tab is performed by simply applying withdrawal force to the housing. In addition to providing a means of disconnecting the terminal, the housing performs its traditional insulating function.

Aside from reduced insertion forces, Positive Lock receptacles give the assembler a definite mechanical "snap" when the terminal is correctly seated over the mating tab. This facilitates correct assembly in hard-to-reach areas such as under dashboards, recessed switch tabs, etc.

Safety is enhanced by the locking capability of the product. Unless the depressor is deliberately deflected, either manually or by withdrawal force applied directly to the optional housing, a terminal will not easily come off of the tab. Thus, the danger from exposed live parts or disruption of critical circuitry due to improperly seated or accidentally removed terminals is greatly reduced.

For complete product information, order Catalog 82004

Products for Industrial & Commercial Applications
Dimensions are shown for reference purposes only.
Dimensions are in inches and millimeters unless otherwise specified. Values in brackets are metric equivalents.
Specifications subject to change.
Technical Support Center
1-800-522-6752
www.tycoelectronics.com

Positive Lock Receptacles

Mark I 250 Series Receptacles

Stock Thickness: .016

■ **Recognized under the Component Program of Underwriters Laboratories Inc., UL File No. E28476**

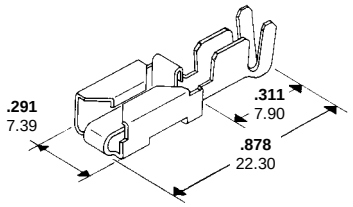

Wire Range AWG	Insulation Diameter	Material and Finish	Part Numbers			
			Receptacle		Quick Change Applicator No. ■	Hand Tool
20-16	**.090–.130** 2.29-3.30	Brass/Pre-Tin	1-160759-1	X	567181-2	654174-1
18-14	**.135–.195** 3.43-4.95	Brass/Tin	63812-1[1]	X	680140-2	—
	.095–.155 2.41-3.94	Brass/Tin	154718-3	X	466542-3	525651
13-11	**.140–.170** 3.56-4.32	Brass/Tin	154717-3	X	466883-2	525651
12-10	**.135–.200** 3.43-5.08	Brass/Tin	790319-2	—	567417-2	—
12-10	**.135–.200** 3.43-5.08	Brass/Pre-Tin	790319-3	—	567417-2	—

[1]"A" Style Housing only
[2] Quick-Change Applicator for AMP-O-LECTRIC Machine 565435-5. For AMPOMATOR Machine and other machines not listed, contact Tyco Electronics.

Receptacle Housings

Material:
94 V-2, 6/6 nylon

1 Position

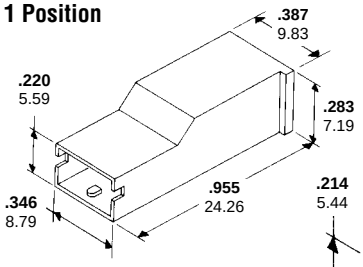

A

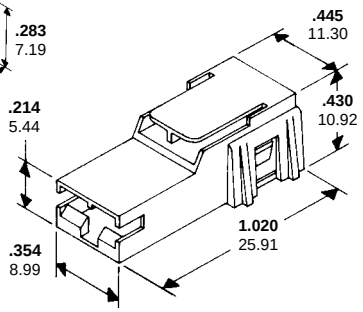

B

Part No.	Style	Color
154719-0	A	Black
154719-1	A	Natural
520961-1[1]	B	Black

[1]Press-to-release with secondary lock

2 Position

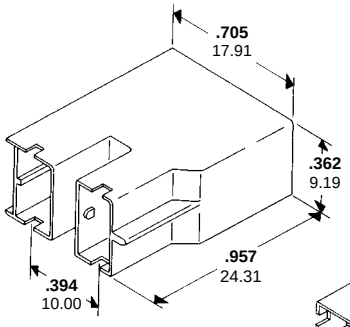

H-TYPE

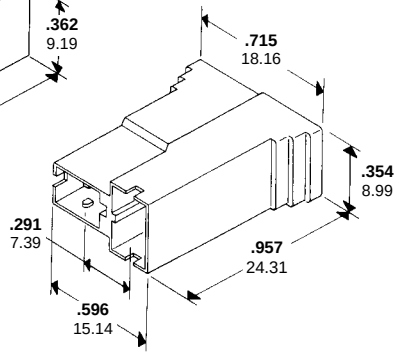

T-TYPE

Part No.	Style	Color
926521-2	H	Black

Part No.	Style	Color
926522-1	T	Black
926522-2	T	Natural

For complete product information, order Catalog 82004

Positive Lock Receptacles

Mark II 187 Series Receptacles

- Recognized under the Component Program of Underwriters Laboratories Inc., File No. E66717 and E28476
- CSA Certified Report LR 7189A

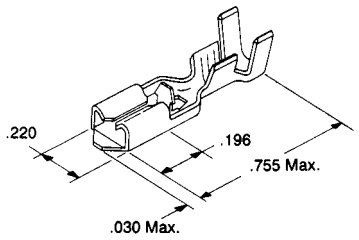

Wire Range AWG	Insulation Diameter	Tab Size	Material and Finish	Part Numbers	
				Receptacles	Quick Change Applicator No.*
24-20	**.060–.110** 1.52-2.79	**.020** 0.51	Brass/Pre-Tin	63407-2[1]	567110
20-16	**.090–.130** 2.29-3.30	**.032** 0.81	Brass/Tin	63313-1[1]	567109
	.090–.130 2.29-3.30	**.020** 0.51	Brass/Pre-Tin	63232-1[1]	567109
				63520-1	567109-2

[1] Low profile—not for use in housing.

Receptacle Housings

Material:
94 V-2, 6/6 nylon

Color:
Natural

- Recognized under the Component Program of Underwriters Laboratories Inc., File No. E28476
- CSA Certified Report LR 7189A

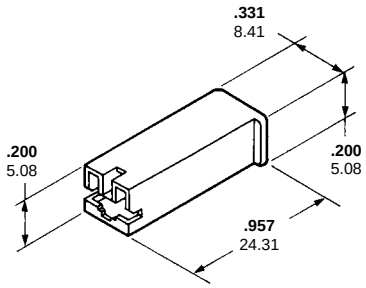

Part No. 521125-1 (.187 x .032)

Recommended Mating Tab Dimensions

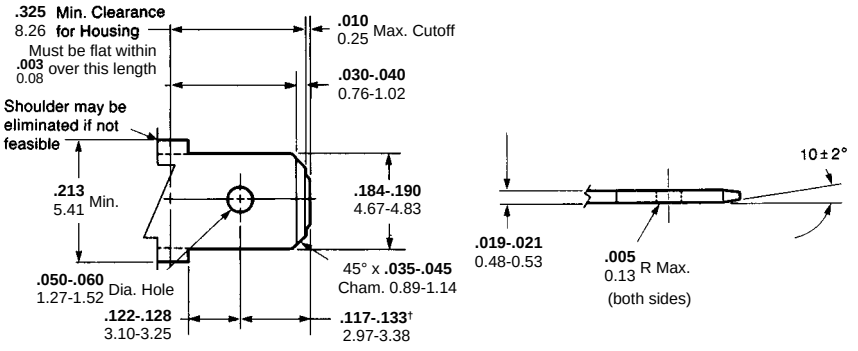

†Use when shoulder is eliminated

* Quick-Change Applicator for AMP-O-LECTRIC Machine 565435-5. For AMPOMATOR Machine and other machines not listed, consult Tyco Electronics.

For complete product information, order Catalog 82004

Products for Industrial & Commercial Applications
Dimensions are shown for reference purposes only.
Dimensions are in inches and millimeters unless otherwise specified. Values in brackets are metric equivalents.
Specifications subject to change.
Technical Support Center 1-800-522-6752
www.tycoelectronics.com

Positive Lock Receptacles

Mark III 250 Series Receptacles

Stock Thickness: .016 Accepts .032 Tab

- **Recognized under the Component Program of Underwriters Laboratories Inc., File No. E28476**
- **CSA Certified Report LR 7189A**

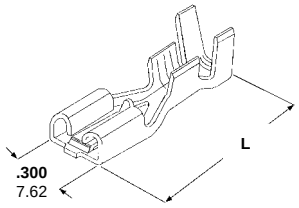

Wire Range AWG	Insulation Diameter	L	Material and Finish	Part Numbers	
				Receptacles	Quick Change Applicator No.
16-12 or 2 #18's	**.120-.170** 3.05-4.32	**.771** 19.58	Brass	1217092-1	680161-2
			Tin Plated Brass	1217092-2	
18-14	**.090-.155** 2.29-3.94	**.771** 19.58	Brass	63854-1	680161-2
			Tin Plated Brass	63854-2	
22-18	**.060-.110** 1.52-2.79	**.770** 19.56	Brass	63933-1	680161-2
			Tin Plated Brass	63933-2	

[1] Quick-Change Applicator Part No. with -1 is for a "T" terminating unit used in automatic machines; -2 is for a "K" AMP-O-LECTRIC bench machine.
[3] Low profile—not for use in housing.

Receptacle Housings

Material: 94 V-2, 6/6 nylon
Color: Natural

- **Recognized under the Component Program of Underwriters Laboratories Inc., File No. E28476**
- **CSA Certified Report LR 7189A**

Water Valve

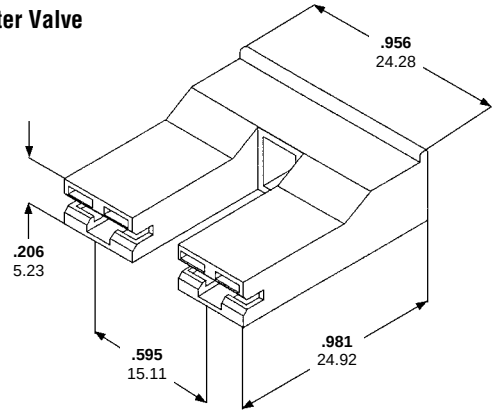

Part No. 521119-1

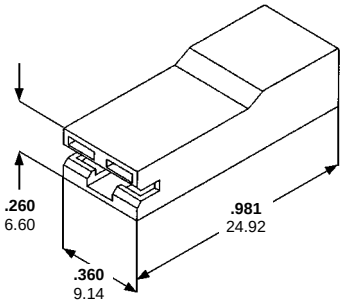

Part No. 521120-1

AMP Positive Lock RAST 5 Connector System

Product Facts

- Meets UL-310 specification for quick connect terminals
- 2 through 8 position housings
- Keying and polarization features
- Utilizes AMP Positive Lock Mark III Receptacles
- Terminals available for 18-14 AWG single wire or 18-16 AWG double wire applications
- Plain brass and tin plated terminals available

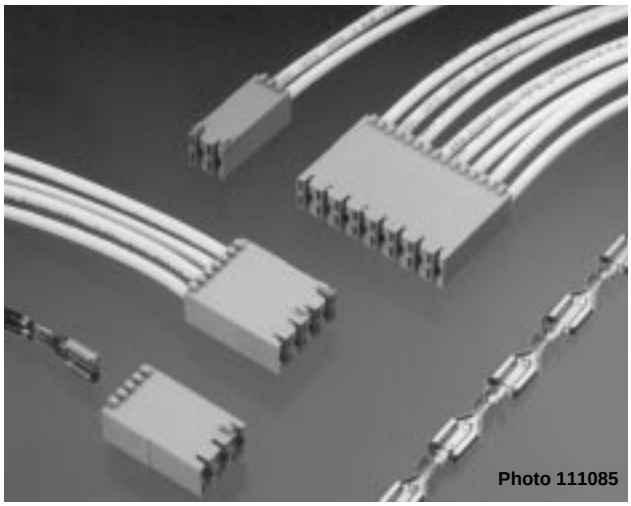

Material:

Housing: Type 6/66 Nylon, UL 94V-0 rated

Receptacles: Tin plated or plated brass, .013 material thickness

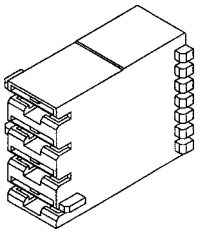
(4 position shown)

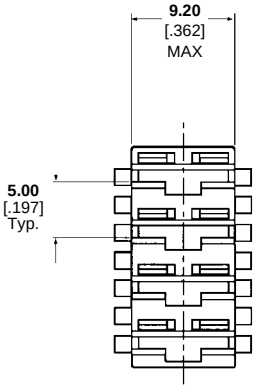

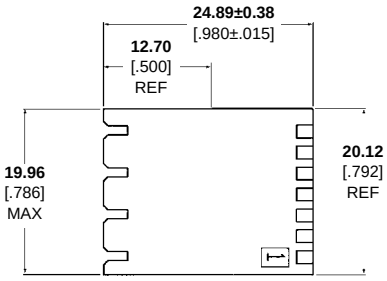

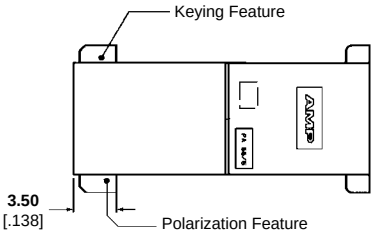

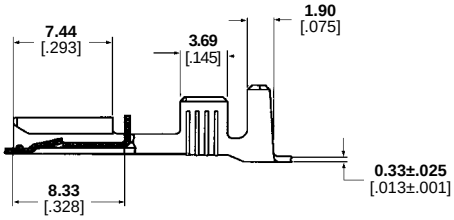

Housing Description	Housing Part Number
2 position	521204-1
3 position	521205-1
4 position	521206-1
5 position	521207-1
6 position	521208-1
7 position	521209-1
8 position	521210-1

Terminal Description	Terminal Part Number
18-14 AWG, brass	1217094-1
18-14 AWG, tin-plated brass	1217094-2
16-12 AWG or two 18 AWG wires, brass	1217095-1
16-12 AWG or two 18 AWG wires, tin plated brass	1217095-2

For complete product information, order Catalog 82004

Products for Industrial & Commercial Applications

Dimensions are shown for reference purposes only.

Dimensions are in inches and millimeters unless otherwise specified. Values in brackets are metric equivalents.

Specifications subject to change.

Technical Support Center
1-800-522-6752
www.tycoelectronics.com

Ultra–Fast Fully Insulated FASTON Receptacles and Tabs

Performance Capabilities

- **Meets UL-310 specification for quick connect terminals**
- **Meets CSA C22.2 No. 153 Specification for quick connect terminals**
- **Meets NEMA DC-2 Standard for quick connect terminals (Flag meets mechanical standard only)**
- **600 volt application capability [1000 volts for signs and fixtures]**

Product Facts

- **One-piece Fully Insulated Premier quality FASTON Receptacle prevents shock and short hazards**
- **Designed to ensure correct lead-in of tab**
- **Designed to ensure full mating with a variety of tab styles including those with shoulders**
- **Funnel wire entry**
- **Wire stop**
- **Visual inspection of crimp and wire brush**
- **Assemblies are color coded by wire size**
- **Assemblies contain wire size and tab size designation**
- **Tab thickness marked on terminal and visible through housing**
- **Standard and large insulation diameter product**
- **Application tooling available to meet production requirements**
- **Tin-plated copper alloy terminals**
- **UL rated at +105°C**
- **Terminates 26-10 AWG solid, fused and stranded wire (Flags terminate stranded wire only)**

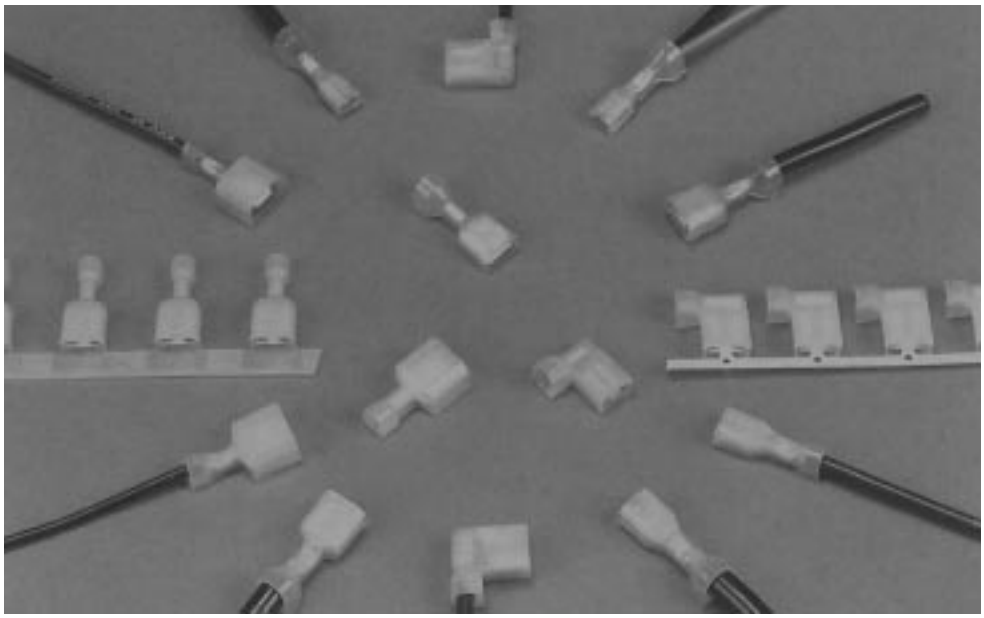

The Ultra-Fast Fully Insulated FASTON Receptacle and Tab offers the advantage of a completely protected terminal and a wire crimp with comparable electromechanical performance to open barrel "F" crimp FASTON Terminals. The "User-Friendly" design combines easy mating with rounded corners. The .187 and .250 series receptacles incorporate a two-stage roll configuration and a cantilever mounted dimple which provides easy insertion and multiple independent points of contact for reduced tab interface resistance.

Ultra-Fast Fully Insulated FASTON Receptacles, Flag Receptacles and Tabs preclude the need for costly electrical safety interlocks or special protective shields to prevent shock hazards. In addition, electrical short circuits from exposed leads are eliminated, even in equipment requiring close contact spacing.

The Ultra-Fast Receptacle, Flag Receptacle and Tab are preinsulated assemblies featuring a housing molded from type 6/6 nylon material with a +125°C UL temperature rating.

The Ultra-Fast Receptacle housing completely encloses a tin-plated copper alloy Premier FASTON receptacle which has been stress-relieved for increased durability and resistance to abuse. The FASTON receptacle is recessed sufficiently within the housing to allow its use in 600-volt applications. The front end of the terminal is designed for positive mating with a variety of tabs, including those with shoulders. The housing has a slotted membrane which is displaced by two tab shoulders allowing proper engagement of tab and receptacle while maintaining the fully insulated characteristic.

Positive entry and lead-in of the tab is assured by the inner housing wall and the lead-in on the terminal rolls. This permits positive engagement, even in blind mating locations.

The Ultra-Fast Tab housing completely encloses a tin-plated copper alloy FASTON tab. The FASTON tab is recessed sufficiently within the housing to allow its use in 600-volt applications. The housing is designed to completely encapsulate the tab and receptacle when the two are mated.

Quality control is easily maintained. The nylon housing is translucent, allowing visual inspection of the termination. In addition, a crimp code on the hand tool is indented into the housing during the crimping operation which identifies that the proper crimp dies were used.

Depending on production requirements, Tyco Electronics provides a complete selection of terminating equipment including the AMP-O-LECTRIC terminating machine and fully automatic AMPOMATOR, CLS II and CLS III lead-making machines.

- **UL Listed under File No. E66717**
- **CSA Certified under File No. LR 7189**
- **VDE tested according to DIN VDE Reg. No.0627/9.91, VDE Reg. No. 5193**

For complete product information, order Catalog 82004

Ultra–Fast Fully Insulated FASTON Receptacles and Tabs

Ultra-Fast Fully Insulated FASTON Receptacles

Material:

Housing—Nylon Type 6/6
Terminal—Tin-plated, copper alloy
Color Code (Translucent)
Violet—26-22 AWG
Red—22-18 AWG
Blue—16-14 AWG
Yellow—12-10 AWG

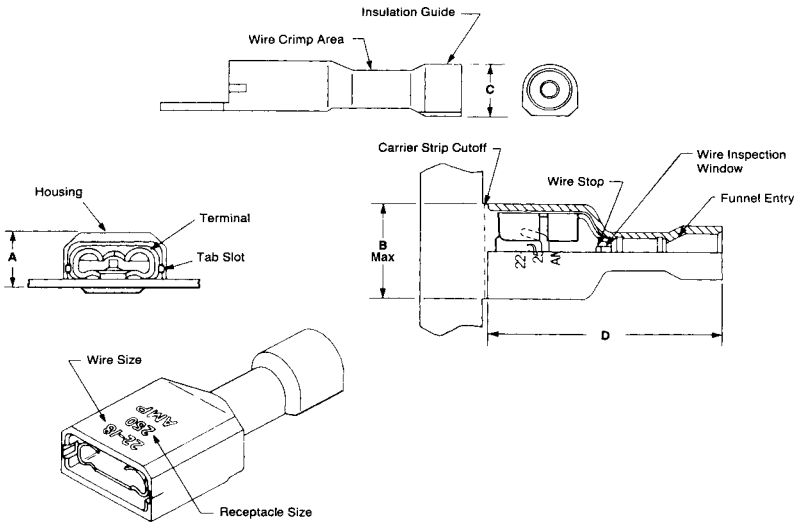

Description	Wire Range AWG	Ins. Dia. Max.	Dimensions A	B	C	D	Mating Tab	Terminal Base Material	Part Numbers Strip	Loose Piece
.110/.125 Series	26-22	**.100** 2.54	**.145** 3.68	**.275** 6.99	**.138** 3.51	**.735** 18.67	**.020 x .110/.125** 0.51 x 2.79/3.18	Brass	7-520365-2[1]	7-520366-2[1]
	22-18	**.120** 3.05	**.160** 4.06	**.275** 6.99	**.167** 4.24	**.735** 18.67	**.016 x .110/.125** 0.41 x 2.79/3.18	Brass	2-520080-2[1]	2-520081-2[1]
							.020 x .110/.125 0.51 x 2.79/3.18	Brass	2-520083-2	2-520084-2
							.032 x .110/.125 0.81 x 2.79/3.18	Brass	2-520272-2	2-520273-2
		.230 5.84	**.155** 3.94	**.275** 6.99	**.295** 7.49	**.865** 21.97	**.020 x .110/.125** 0.51 x 2.79/3.18	Brass	2-520306-2	—
							.032 x .110/.125 0.81 x 2.79/3.18	Brass	2-520310-2	—
	16-14	**.260** 6.60	**.175** 4.45	**.275** 6.99	**.325** 8.26	**.865** 21.97	**.020 x .110/.125** 0.51 x 2.79/3.18	Brass	3-520370-2[2]	—
.187 Series	22-18	**.135** 3.43	**.165** 4.19	**.336** 8.53	**.200** 5.08	**.855** 21.72	**.020 x .187** 0.51 x 4.75	Brass	2-520181-2	2-520182-2
							.032 x .187 0.81 x 4.75	Brass	2-520193-2	2-520194-2
		.230 5.84	**.165** 4.19	**.336** 8.53	**.295** 7.49	**.935** 23.75	**.020 x .187** 0.51 x 4.75	Brass	2-520261-2	—
							.032 x .187 0.81 x 4.75	Brass	2-520274-2	2-520275-2
	16-14	**.160** 4.06	**.185** 4.70	**.336** 8.53	**.225** 5.72	**.855** 21.72	**.020 x .187** 0.51 x 4.75	Brass	3-350815-2	3-350816-2
							.032 x .187 0.81 x 4.75	Brass	3-520124-2	3-520125-2
		.260 6.60	**.185** 4.70	**.336** 8.53	**.325** 8.26	**.935** 23.75	**.020 x .187** 0.51 x 4.75	Brass	3-520150-2	3-520151-2
							.032 x .187 0.81 x 4.75	Brass	3-520276-2	—
.205 Series	22-18	**.135** 3.43	**.195** 4.95	**.409** 10.39	**.200** 5.08	**.855** 21.72	**.032 x .205** 0.81 x 5.21	Brass	2-521308-2	—
.250 Series	22-18	**.135** 3.43	**.195** 4.95	**.409** 10.39	**.200** 5.08	**.855** 21.72	**.032 x .250** 0.81 x 6.35	Brass	2-520183-2	2-520184-2
								Phos. Brz.	2-520183-4	2-520184-4
		.230 5.84	**.195** 4.95	**.409** 10.39	**.295** 7.49	**.935** 23.75	**.032 x .250** 0.81 x 6.35	Brass	2-520263-2	2-520264-2
								Phos. Brz.	2-520263-4	—
	16-14	**.160** 4.06	**.195** 4.95	**.409** 10.39	**.225** 5.72	**.855** 21.72	**.032 x .250** 0.81 x 6.35	Brass	3-350819-2	3-350820-2
								Phos. Brz.	3-520116-2	3-520117-2
		.260 6.60	**.195** 4.95	**.409** 10.39	**.325** 8.26	**.935** 23.75	**.032 x .250** 0.81 x 6.35	Brass	3-520140-2	3-520141-2
								Phos. Brz.	3-520140-4	—
	12-10	**.320** 8.13	**.250** 6.35	**.409** 10.39	**.388** 9.86	**.935** 23.75	**.032 x .250** 0.81 x 6.35	Brass	4-520447-2	4-520448-2

[1] UL Recognized, CSA Certified.
[2] UL Recognized 8 AMPS Max. CSA Certified.

For complete product information, order Catalog 82004

Products for Industrial & Commercial Applications
Dimensions are shown for reference purposes only.
Dimensions are in inches and millimeters unless otherwise specified. Values in brackets are metric equivalents.
Specifications subject to change.
Technical Support Center
1-800-522-6752
www.tycoelectronics.com

Ultra–Fast Fully Insulated FASTON Receptacles and Tabs

Ultra-Fast Fully Insulated FASTON Tabs

Material:

Housing—Nylon Type 6/6
Terminal—Tin-plated, copper alloy
Color Code (Translucent)
Red—22-18 AWG
Blue—16-14 AWG

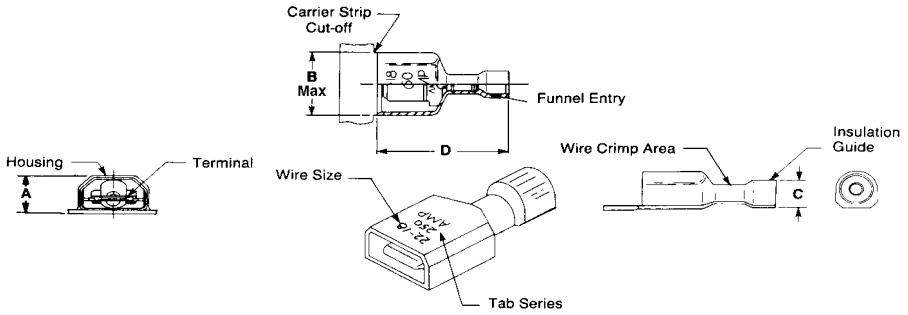

Description	Wire Range AWG	Ins. Dia Max.	Dimensions A	B	C	D	Tab Size	Terminal Base Material	Part Numbers Strip	Loose Piece
.250 Series	22-18	**.135** 3.43	**.290** 7.37	**.522** 13.26	**.205** 5.21	**.855** 21.72	**.032 x .250** 0.81 x 6.35	Brass	2-520102-1	2-520103-2
		.230 5.84	**.290** 7.37	**.522** 13.26	**.295** 7.49	**.935** 23.75	**.032 x. 250** 0.81 x 6.35	Brass	2-521144-2	2-521192-2
	16-14	**.160** 4.06	**.290** 7.37	**.522** 13.26	**.230** 5.84	**.855** 21.72	**.032 x. 250** 0.81 x 6.35	Brass	3-520106-2	3-520107-2
		.260 6.60	**.290** 7.37	**.522** 13.26	**.325** 8.26	**.935** 23.75	**.032 x. 250** 0.81 x 6.35	Brass	3-521142-2	3-521191-2
	12-10	**.320** 8.13	**.352** 8.94	**.522** 13.26	**.388** 9.86	**.935** 23.75	**.032 x .250** 0.81 x 6.35	Brass	4-521097-2	4-521098-2
.187 Series	22-18	**.135** 3.43	**.250** 6.35	**.448** 11.38	**.205** 5.21	**.793** 20.14	**.020 x .187** 0.51 x 4.75	Brass	2-521102-2	2-521103-2
							.032 x .187 0.81 x 4.75	Brass	2-521104-2	2-521105-2

Ultra-Fast Fully Insulated FASTON Flag Receptacles

Material:

Housing—Nylon Type 6/6
Terminal—Tin-plated, copper alloy
Color Code (Translucent)
Red—22-18 AWG
Blue—16-14 AWG

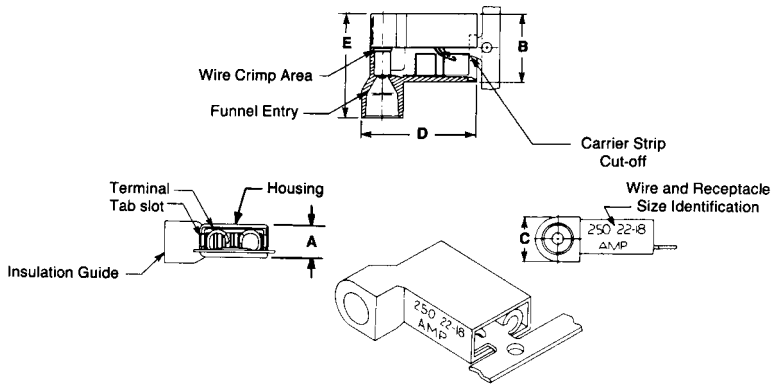

Description	Wire Range[1] AWG	Ins. Dia. Max.	Dimensions A	B	C	D	E	Mating Tab	Terminal Base Material	Part Numbers Strip	Loose Piece
.187 Series	22-18	**.165** 4.19	**.187** 4.75	**.320** 8.13	**.235** 5.97	**.636** 16.15	**.515** 13.08	**.020 x .187** 0.51 x 4.75	Brass	2-520334-2	2-520335-2
								.032 x .187 0.81 x 4.75	Brass	2-520336-2	2-520337-2
	16-14	**.185** 4.70	**.187** 4.75	**.320** 8.13	**.255** 6.48	**.632** 16.05	**.515** 13.08	**.020 x .187** 0.51 x 4.75	Brass	3-520338-2	3-520339-2
								.032 x .187 0.81 x 4.75	Brass	3-520340-2	—
		.260 6.60	**.187** 4.75	**.320** 8.13	**.325** 8.26	**.668** 16.97	**.565** 14.35	**.020 x .187** 0.51 x 4.75	Brass	3-520997-2	—
								.032 x .187 0.81 x 4.75	Brass	3-521247-2	—
.205 Series	22-18	**.165** 4.19	**.187** 4.75	**.385** 9.78	**.235** 5.97	**.636** 16.15	**.580** 14.73	**.032 x .205** 0.81 x 5.21	Brass	2-521164-2	—
.250 Series	22-18	**.165** 4.19	**.187** 4.75	**.385** 9.78	**.235** 5.97	**.636** 16.15	**.580** 14.73	**.032 x .250** 0.81 x 6.35	Brass	2-520128-2	2-520129-2
		.230 5.84	**.187** 4.75	**.385** 9.78	**.295** 7.49	**.665** 16.89	**.630** 16.00	**.032 x .250** 0.81 x 6.35	Brass	2-520856-2	—
	16-14	**.185** 4.70	**.187** 4.75	**.385** 9.78	**.255** 6.48	**.632** 16.05	**.580** 14.73	**.032 x .250** 0.81 x 6.35	Brass	3-520132-2	3-520133-2
		.260 6.60	**.187** 4.75	**.385** 9.78	**.325** 8.26	**.668** 16.97	**.630** 16.00	**.032 x .250** 0.81 x 6.35	Brass	3-521013-2	—

[1] Stranded wire only.

For complete product information, order Catalog 82004

Ultra–Fast Plus—Fully Insulated FASTON Receptacles and Tabs

Product Facts

- One-piece Fully Insulated Premier quality FASTON Receptacle with insulation crimp prevents shock and short hazards
- Designed to ensure correct lead-in of tab
- Designed to ensure full mating with a variety of tab styles including those with shoulders
- Funnel wire entry
- Wire stop
- Visual inspection of crimp and wire brush
- Assemblies are color-coded by wire size
- Assemblies contain wire size and tab size designation
- Tab thickness marked on terminal and visible through housing
- Application tooling available to meet production requirements
- Tin-plated copper alloy terminals
- UL rated at +105°C
- Terminates 22-14 AWG solid, fused and stranded wire
- Complies with the IEC 380, 601, 950, and UL 1950 requirements for a secondary means of insulation fixing

Performance Capabilities

- Meets UL-310 specification for quick connect terminals; UL listed under File No. E-66717
- Meets CSA C22.2, No.153 Specification for quick connect terminals; CSA Certified under File No. LR 7189
- VDE tested according to DIN VDE 0627/ 9.91, VDE Reg. No. 5193

- Meets NEMA DC-2 standard for quick connect terminals
- 600-volt application capability (1,000 volts for signs and fixtures)
- Tested by TUV File No. E9071003 as suitable for end product certification to the following standards:

EN 60 950/09.87

DIN IEC 380/VDE 0806/08.81

DIN IEC 601-1 Part 1/VDE 0750 T1/05.82

DIN VDE 0700 T1/02.81

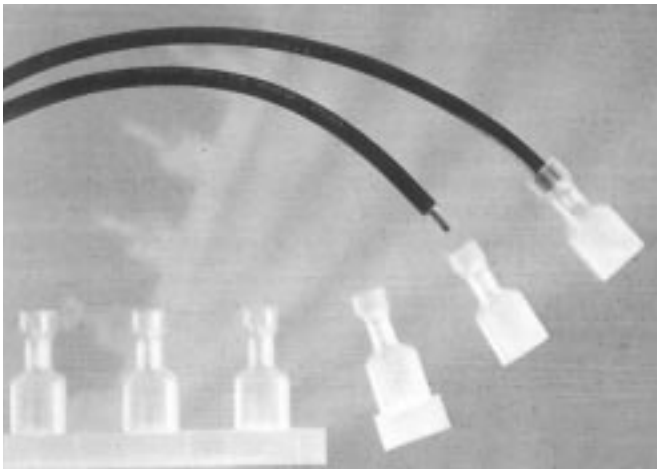

Ultra-Fast Plus Fully Insulated FASTON Receptacles and Tabs offer all the advantages of the standard Ultra-Fast product plus an insulation crimp.

Ultra-Fast Plus Fully Insulated FASTON Receptacles and Tabs preclude the need for costly electrical safety interlocks or special protective shields to prevent shock hazards. In addition, electrical short circuits from exposed leads are eliminated, even in equipment requiring close contact spacing.

Ultra-Fast Plus Receptacles and Tabs are preinsulated assemblies featuring a co-molded housing produced from two different nylon materials. The receptacle/ tab and wire barrel portions of the housing are molded from type 6/6 nylon material with a +125°C UL temperature rating. The insulation barrel is molded from a premium grade nylon selected to retain the insulation crimp shape. This premium nylon exhibits minimal springback, thus providing actual insulation crimp tensile strength as well as strain relief for applications where extreme wire dressing and/or vibration are present.

The Ultra-Fast Plus Receptacle housing completely encloses a tin-plated copper alloy Premier FASTON receptacle which has been stress relieved for increased durability and resistance to operator abuse. The FASTON receptacle is recessed sufficiently within the housing to allow its use in

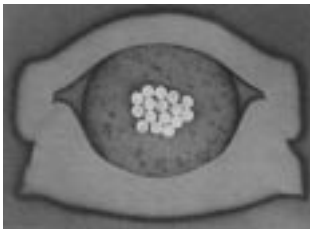

600-volt applications. The front end of the terminal is designed for positive mating with a variety of tabs, including those with shoulders. The housing has a slotted membrane which is displaced by two tab shoulders allowing proper engagement of tab and receptacle while maintaining the fully insulated characteristics.

Positive entry and lead-in of the tab is assured by the inner housing wall and the lead-in on the terminal rolls. This permits positive engagement, even in blind mating locations.

The Ultra-Fast Plus Tab housing completely encloses a tin-plated copper alloy FASTON tab. The FASTON tab is recessed sufficiently within the housing to allow its use in 600-volt applications. The housing is designed to completely encapsulate the tab and receptacle when the two are mated.

Quality control is easily maintained. The nylon housing is translucent, allowing visual inspection of the termination.

Depending on production requirements, Tyco Electronics provides a complete selection of terminating equipment including the AMP-O-LECTRIC terminating machine and the fully automatic AMPOMATOR, CLSII and CLSIII lead-making machines.

For complete product information, order Catalog 82004

Products for Industrial & Commercial Applications

Dimensions are shown for reference purposes only.

Dimensions are in inches and millimeters unless otherwise specified. Values in brackets are metric equivalents.

Specifications subject to change.

Technical Support Center
1-800-522-6752
www.tycoelectronics.com

Ultra–Fast Plus—Fully Insulated FASTON Receptacles and Tabs

Ultra-Fast Plus—Fully Insulated FASTON Receptacles

Material:

Housing—Nylon
Terminal—Tin plated, copper alloy
Color Code (Translucent)
Red—22-18 AWG
Blue—16-14 AWG

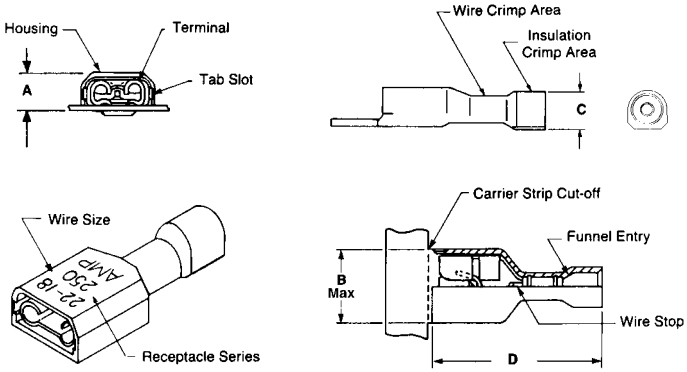

Description	Wire Range AWG	Ins. Dia. Range	Dimensions A	B	C	D	Mating Tab	Terminal Base Material	Part Numbers Strip	Loose Piece
.110/.125 Series	22-18	**.060-.120** 1.52-3.05	**.160** 4.06	**.275** 6.99	**.167** 4.24	**.735** 18.67	**.032 x .110/.125** 0.81 x 2.79/3.18	Brass	2-520979-2	—
							.020 x .110/.125 0.51 x 2.79/3.18	Brass	2-520932-2	—
.187 Series	22-18	**.060-.135** 1.52-3.43	**.165** 4.24	**.336** 8.53	**.200** 5.08	**.855** 21.72	**.020 x .187** 0.51 x 4.75	Brass	2-520401-2	2-520409-2
							.032 x .187 0.81 x 4.75	Brass	2-520403-2	2-520411-2
	16-14	**.090-.160** 2.29-4.06	**.185** 4.70	**.336** 8.53	**.225** 5.72	**.855** 21.72	**.020 x .187** 0.51 x 4.75	Brass	3-520402-2	3-520410-2
							.032 x .187 0.81 x 4.75	Brass	3-520404-2	3-520412-2
.250 Series	22-18	**.060-.135** 1.52-3.43	**.195** 4.95	**.409** 10.39	**.200** 5.08	**.855** 21.72	**.032 x .250** 0.81 x 6.35	Brass	2-520405-2	2-520407-2
	16-14	**.090-.160** 2.29-4.06	**.195** 4.95	**.409** 10.39	**.225** 5.72	**.855** 21.72	**.032 x .250** 0.81 x 6.35	Brass	3-520406-2	3-520408-2

Ultra-Fast Plus—Fully Insulated FASTON Tabs

Material:

Housing—Nylon Type 6/6
Terminal—Tin plated, copper alloy
Color Code (Translucent)
Red—22-18 AWG
Blue—16-14 AWG

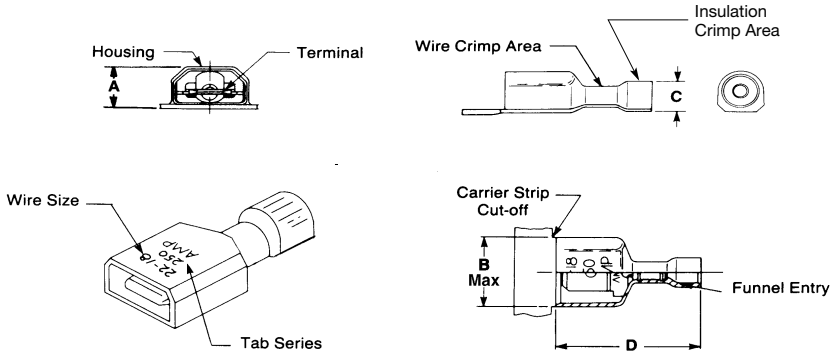

Description	Wire Range AWG	Ins. Dia. Range	Dimensions A	B	C	D	Mating Tab	Terminal Base Material	Part Numbers Strip	Loose Piece
.250 Series	22-18	**.060-.135** 1.52-3.43	**.290** 7.37	**.522** 13.26	**.205** 5.21	**.855** 21.72	**.032 x .250** 0.81 x 6.35	Brass	2-521055-2	—
	16-14	**.090-.160** 2.29-4.06	**.290** 7.37	**.522** 13.26	**.230** 5.84	**.855** 21.72	**.032 x .250** 0.81 x 6.35	Brass	3-521057-2	—

For complete product information, order Catalog 82004

Products for Industrial & Commercial Applications
Dimensions are shown for reference purposes only.
Dimensions are in inches and millimeters unless otherwise specified. Values in brackets are metric equivalents.
Specifications subject to change.
Technical Support Center
1-800-522-6752
www.tycoelectronics.com

Ultra–Pod Fully Insulated FASTON Receptacles and Tabs

Product Facts

- **Reduced insertion force**
- **Designed to ensure correct lead-in of tab**
- **Mates with typical NEMA DC-2 187 and 250 Series tab styles including those with shoulders**
- **UL rated at +105°C**
- **187 Series accepts 20-16 AWG [0.5–1.4mm2] wire and 250 Series accepts 22-12 AWG [0.3–3 mm2] wire**
- **Visual inspection of crimp and wire brush**
- **Terminated by automatic or semi-automatic equipment to meet production requirements**
- **Complies with the IEC 380, 601 and 950 and UL 1950 requirements for a secondary means of insulation fixing**
- **Listed by Underwriters Laboratories Inc., File No. E66717**
- **CSA Certified, File No. LR 7189**
- **VDE tested according to DIN VDE 0627/ 9.91, VDE Reg. No. 5193**

Technical Documents:

Product Specification
108-1285

Application Specification
114-2124

Hand Tools—Insertion
187 Series—314920-1
250 Series—314916-1
250 Series Flag—314919-1

Hand Tools—Extraction
187 Series—314918-1
250 Series—314917-1

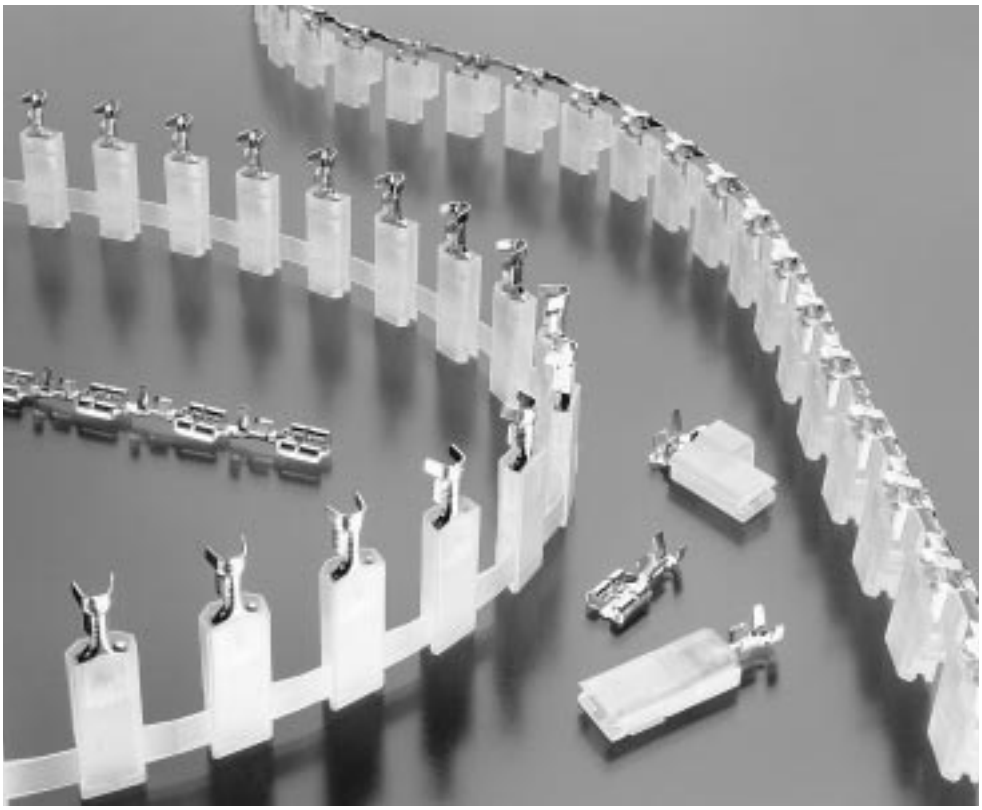

Ultra-Pod Fully Insulated Receptacles offer the newest in one-step automatic application of insulated quick connects. The unique integral plastic carrier designed specifically for this product allows insulated F-Crimp terminations to be produced quickly and easily. Applied cost savings are attainable with either bench or high-speed automatic termination equipment and the elimination of any secondary insulation operations. Both the crimping of the terminal and the terminal insulating occur in a single stroke of the press and applicator—the crimping on the down-stroke and the insulating on the up-stroke.

The receptacles contained within the Ultra-Pod FASTON Receptacle assemblies are proven, tested and customer qualified and can be immediately used in existing applications where insulation has been accomplished by other means. The low insertion force design provides easier tab insertion, reduces operator fatigue and improves the productivity and reliability of the end assembly operation.

The translucent insulating housing is produced by a unique molding process which provides an integral carrier and eliminates the crimp location problems related to secondary carriers. This housing, produced from 125°C rated 6/6 nylon, covers the FASTON receptacle sufficiently to provide for use in 600-volt applications. Most importantly, this insulating system eliminates the workplace hazards and labor costs of chemically expanded or heat shrink tubing.

Depending on production requirements, Tyco Electronics provides a complete selection of terminating equipment including the AMP-O-LECTRIC terminating machine and fully automatic AMPOMATOR, CLSII, and CLSIII lead-making machines.

For complete product information, order Catalog 82004

Products for Industrial & Commercial Applications
Dimensions are shown for reference purposes only.
Dimensions are in inches and millimeters unless otherwise specified. Values in brackets are metric equivalents.
Specifications subject to change.
Technical Support Center
1-800-522-6752
www.tycoelectronics.com

Ultra–Pod Fully Insulated FASTON Receptacles and Tabs

Insulation Support

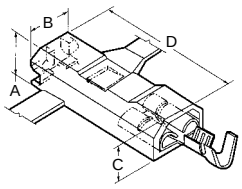

Description	Wire Range	Ins. Dia. Range	Dimensions A	B	C	D	Mating Tab	UL94[1]	Color	Material and Finish	Part Numbers
.110 Series	22-18	**.080-.120** 2.03-3.05	**.151** 3.82	**.224** 5.69	**.205** 5.21	**.805** 20.45	**.020 x .187** 0.51 x 4.75	V2	Natural	Brass	521288-1
										Tin Plated Brass	521288-2
.187 Series	20-16	**.090-.130** 2.29-3.30	**.170** 4.32	**.295** 7.49	**.200** 5.08	**.775** 19.68	**.020** 0.51	V2	Natural	Brass	520973-1
										Tin Plated Brass	520973-2
								V0	Natural	Brass	521225-1
										Tin Plated Brass	521225-2
							.032 0.81	V0	Natural	Brass	520982-1
										Tin Plated Brass	520982-2
								V2	Natural	Brass	521284-1
										Tin Plated Brass	521284-2
	18-16	**.105-.210** 2.67-5.33	**.170** 5.33	**2.95** 7.49	**.200** 5.08	**.775** 19.68	**.020** 0.51	V2	Natural	Brass	521293-1
										Tin Plated Brass	521293-2
.250 Series	22-18	**.090-.130** 2.29-3.30	**.195** 4.95	**.370** 9.40	**.225** 5.72	**.945** 24.13	**.032** 0.81	V2	Natural	Brass	520988-1
										Tin Plated Brass	520988-2
								V0	Natural	Brass	521368-1
										Tin Plated Brass	521368-2
	18-14	**.120-.170** 3.05-4.32	**.195** 4.95	**.370** 9.4	**.225** 5.72	**.950** 24.13	**.032** 0.81	V2	Natural	Brass	520963-1
										Tin Plated Brass	520963-2
								V0	Natural	Brass	521367-1
										Tin Plated Brass	521367-2
								V2	Black	Tin Plated Brass	521011-2
										Nickel Plated Steel	521011-1
	14-10	**.130-.180** 3.30-4.57	**.195** 4.95	**.370** 9.4	**.225** 5.72	**.950** 24.13	**.032** 0.81	V2	Natural	Brass	520974-1
										Tin Plated Brass	520974-2
								V0	Natural	Brass	521366-1
										Tin Plated Brass	521366-2

[1] Flammability rating of plastic material.

Flag Insulation Support

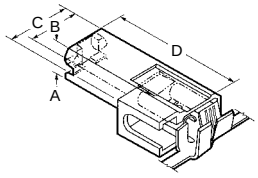

Description	Wire Range AWG	Ins. Dia. Range	Dimensions A	B	C	D	Mating Tab	UL 94[1]	Color	Material and Finish	Part Numbers
.250 Series	22-18	**.110–.160** 2.79–4.06	**.200** 5.08	**.370** 9.39	**.585** 14.86	**.680** 17.27	**.032** 0.81	V2	Natural	Tin Plated Brass	521050-2
	18-14	**.110–.160** 2.79–4.06	**.200** 5.08	**.370** 9.39	**.585** 14.86	**.680** 17.27	**.032** 0.81	V2	Natural	Brass	520971-1
										Tin Plated Brass	520971-2
									Black	Tin Plated Brass	520971-4
								V0	Natural	Brass	521282-1
										Tin Plated Brass	521282-2
	18-14 (2)-20	**(2) .105 Max.** 2.66	**.200** 5.08	**.370** 9.39	**.585** 14.86	**.680** 17.27	**.032** 0.81	V2	Natural	Brass	521112-1

[1] Flammability rating of plastic material.

Ultra–Pod Fully Insulated FASTON Receptacles and Tabs

Positive Lock Insulation Support

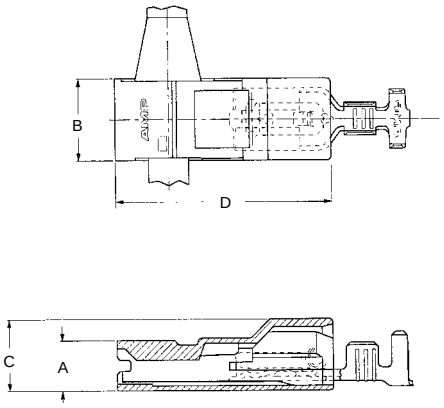

Description	Wire Range	Ins. Dia. Range	Dimensions A	B	C	D	Mating Tab	UL94[1]	Color	Material and Finish	Part Numbers
.187 Series	18-14	**.110-.180** 2.79-4.57	**.186** 4.72	**.307** 7.80	**.265** 6.73	**.812** 20.62	**.020** 0.51	V2	Natural	Brass	521271-1
										Tin Plated Brass	521271-2
.250 Series	18-14	**.110-.180** 2.79-4.57	**.205** .521	**.370** 9.40	**.245** 6.22	**.950** 24.13	**.032** 0.81	V2	Natural	Brass	521213-1
										Tin Plated Brass	521213-2
								V0	Natural	Brass	521317-1
										Tin Plated Brass	521317-2

[1] Flammability rating of plastic material.

Tabs Insulation Support

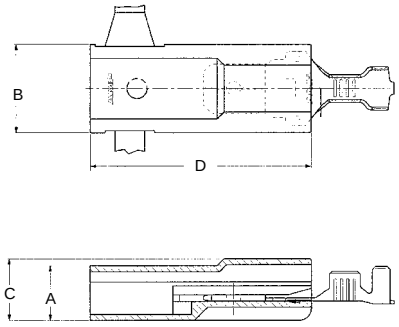

Description	Wire Range	Ins. Dia. Range	Dimensions A	B	C	D	Tab	UL94[1]	Color	Material and Finish	Part Numbers
.250 Series	18-14	**.130-.180** 3.30-4.57	**.275** 6.99	**.450** 11.43	**.310** 7.87	**1.120** 28.45	**.032** 0.81	V2	Natural	Brass	521217-1
										Tin Plated Brass	521217-2

[1] Flammability rating of plastic material.

For complete product information, order Catalog 82004

Products for Industrial & Commercial Applications
Dimensions are shown for reference purposes only.
Dimensions are in inches and millimeters unless otherwise specified. Values in brackets are metric equivalents.
Specifications subject to change.
Technical Support Center 1-800-522-6752 www.tycoelectronics.com

PIDG FASTON Receptacles

Product Facts

- Basic terminal is tin-plated brass
- Color-coded by wire range to help eliminate errors during installation
- Serrations, inside barrel, provide maximum contact and tensile strength after crimping
- Special designed copper sleeve fits over terminal barrel, providing circumferential insulation support to the wire
- Temperature rating of 105°C

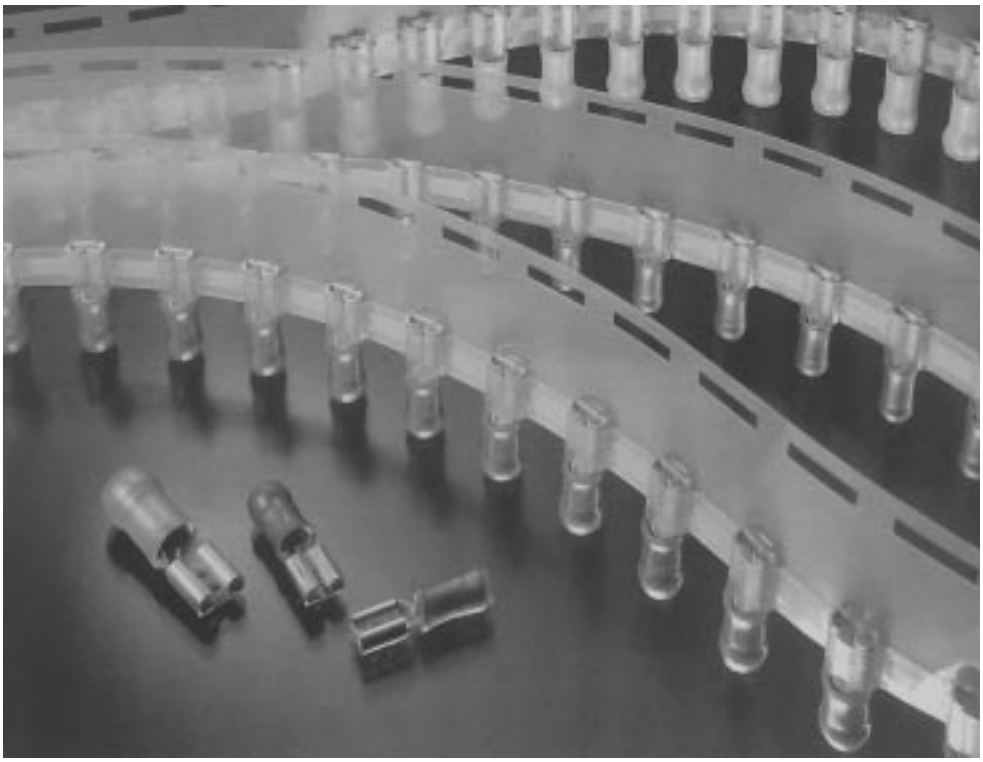

Here is a pre-insulated terminal designed for complete and uniform reliability in the most difficult circuit environment. Each PIDG Terminal consists of a tin-plated brass body with a specially designed copper sleeve and insulation sleeve fitted over the terminal barrel. The design of the tool dies and the construction of the terminal insures uniform insulation thickness under crimping pressure, transmitting this pressure evenly to the center of the crimp area.

AMP compression crimping produces crimps for a given size wire and terminal that are precisely alike in appearance and performance. This is a calculated result made possible by designing the terminal and the crimping tool as precisely matched devices. The dies are precision-engineered from the finest hard-metal alloys. Crimping pressure is controlled by a ratchet device on the hand tool or a corresponding pre-calibration in the crimping jaws of AMP automated crimping machines.

Crimping pressure can neither over-stress nor understress the terminal-barrel–machined dies fully bottom to the precise crimp height required.

The resulting termination is free of contamination, is extremely resistant to shock and critical environments, and its tensile strength approaches that of the wire itself.

Temperature Rating: 105°C

Wire Range	E66717 Recognized	LR7189 Certified
22-16	22-16 Stranded	300 V Max., 105°C Max.[1]
16-14	16-14 Stranded	
12-10	12-10 Stranded	

[1] UL and CSA—Nylon.

For complete product information, order Catalog 82004

Products for Industrial & Commercial Applications
Dimensions are shown for reference purposes only.
Dimensions are in inches and millimeters unless otherwise specified. Values in brackets are metric equivalents.
Specifications subject to change.
Technical Support Center 1-800-522-6752 www.tycoelectronics.com

PIDG FASTON Receptacles

Receptacle Style

A—No dimple with wire stop
B—Dimple with wire stop

Material:

Receptacle—Brass per MIL-C-50 or Phos. Bronze per QQ-B-750
Metallic Sleeve—Copper per QQ-C-576
Plating—Tin plate per MIL-T-10727
Insulation—Nylon

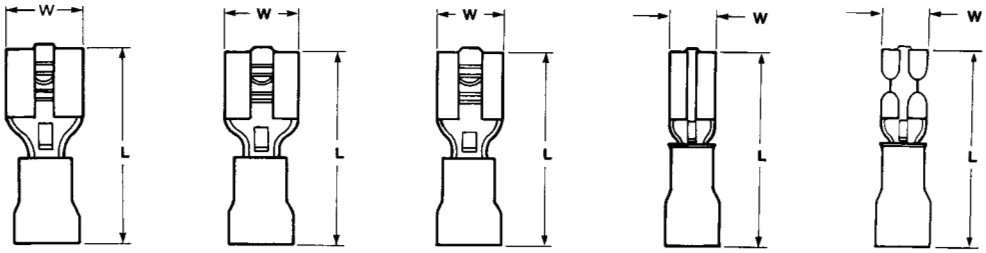

.250 Series | **.205 Series** | **.187 Series** | **.110 Series (Standard)** | **.110 Series (Low Insertion)**

Series	Style	Wire Size Range AWG	Wire Size Range CMA	Dimensions W Nom.	Dimensions L Max.	Terminal Insulation Color	Wire Insulation Diameter Max.	Recept. Matl.	Stock Thk.	Fits Tab Thk.	Part Numbers Loose Piece	Part Numbers Tape Mounted	Part Numbers Strip Form
.250	B	14-12	3,831–6,654	**.300** 7.62	**1.012** 25.70	Green	**.250** 6.35	Brass	**.018** 0.46	**.032** 0.81	—	—	60544-3[3*]
								Phos. Brz.	**.018** 0.46	**.032** 0.81	42844-2[3*]	—	—
.205	B	22-18	509–1,900	**.250** 6.35	**.800** 20.32	Red	**.135** 3.43	Brass	**.016** 0.41	**.020** 0.51	640909-1	640909-2	—
										.032 0.81	640911-1	640911-2	—
	B	16-14	2,050–5,180	**.250** 6.35	**.800** 20.32	Blue	**.170** 4.32	Brass	**.016** 0.41	**.020** 0.51	640913-1	640913-2	—
										.032 0.81	640915-1	640915-2	—
.187	B	26-24	238–475	**.230** 5.84	**.700** 17.78	Yellow	**.085** 2.16	Brass	**.016** 0.41	**.020** 0.51	641321-1[3*]	—	—
	B	22-18	509–1,900	**.230** 5.84	**.800** 20.32	Red	**.135** 3.43	Brass	**.016** 0.41	**.020** 0.51	—	—	640916-1
	B	16-14	2,050–5,180	**.230** 5.84	**.800** 20.32	Blue	**.170** 4.32	Brass	**.016** 0.41	**.020** 0.51	—	—	640918-1
.110	B	22-18	509–1,900	**.148** 3.76	**.734** 18.64	Trans.	**.100** 2.54	Brass	**.012** 0.30	**.016** 0.41	61048-1[1,3*]	—	—
	A	22-18	509–1,900	**.148** 3.76	**.734** 18.64	Trans.	**.100** 2.54	Brass	**.012** 0.30	**.020** 0.51	—	61060-2[1,3*]	—
	B	22-18	509–1,900	**.148** 3.76	**.734** 18.64	Trans.	**.100** 2.54	Brass	**.012** 0.30	**.032** 0.81	60894-1[1,3*]	60894-2[1,3*]	—
	A	22-18	509–1,900	**.160** 4.06	**.800** 20.32	Red	**.140** 3.56	Brass	**.016** 0.41	**.020** 0.51	640923-1[2]	640923-2[2]	640922-1[2]
	A	16-14	2,050–5,180	**.160** 4.06	**.800** 20.32	Blue	**.170** 4.32	Brass	**.016** 0.41	**.020** 0.81	640929-1[2]	640929-2[2]	—
											640931-1[2]	640931-2[2]	—

[1] Standard receptacle.
[2] Low insertion receptacle.
[3] Contact Technical Support Center for Tooling Application.
Note: All the above part numbers are UL Recognized and CSA Certified except those part numbers followed by an asterisk(*).

PIDG FASTON Tooling

Wire Size	Hand Tool	Tools for Tape Mounted Terminations: Tape Dies for 69875 TAPETRONIC No Applicator Required	Tools for Tape Mounted Terminations: Tape Dies for AMP-O-LECTRIC[1] Model "G" Applicator 567200-3	Tools for Tape Mounted Terminations: Tape Dies for AMPOMATOR CLS III G, CLS IV Applicator 687658-1	Tools for Strip Form Terminations: AMPOMATOR CLS III G, CLS IV Applicators
26-24	48518-2	69877-2	69877-2	69877-2	—
22-18	59824-1	59826-1	59826-1*	59826-1	466788-3[2]
22-18 (Natural)	90185-1	90248-2	90248-2	90248-2	466554-3
16-14	59824-1	59827-1	59827-1*	59827-1	466789-3[2]
14-12	90246-1	90240-2	90240-2	90240-2	—
12-10	59824-1	59828-1	59828-1*	59828-1	466790-4[2]

*Only UL and CSA approved.
[1]AMP-O-LECTRIC Model "K" 565435-5 uses applicator 567200-2.
[2]Die included with applicator.

For complete product information, order Catalog 82004

Products for Industrial & Commercial Applications
Dimensions are shown for reference purposes only.
Dimensions are in inches and millimeters unless otherwise specified. Values in brackets are metric equivalents.
Specifications subject to change.
Technical Support Center 1-800-522-6752 www.tycoelectronics.com

Technical Documents

Various technical documents are available for your use:

Production Specifications describe technical performance, characteristics and verification tests. They are intended for the Design, Component and Quality Engineer.

108-2000	.250 Hermetic
108-2002	.187 Modular FASTIN–FASTON
108-2017	Ultra-Fast FASTON Tabs
108-2043	Ultra-Fast FASTON Receptacles
108-2044	Ultra-Fast Plus FASTON Receptacles
108-1033	PIDG FASTON Receptacles
108-1062	PIDG FASTON Receptacles TETRA-CRIMP Hand Tool
108-1285	Ultra-Pod FASTON Receptacles
108-3017	Positive Lock Mark I
108-5126	.187 Positve Lock Mark II
108-5127	.250 Positive Lock Mark II

Application Specifications describe requirements for using the product in its intended application and/or crimping information. They are intended for the Packaging Design Engineer and the Machine Setup Person.

114-2023	FASTIN-FASTON Receptacle and Tab Contacts, 187 Series
114-2025	FASTIN-FASTON Receptacles and Tab Contacts, 250 Series
114-2028	Flag Receptacle Contacts, .110 Series
114-2032	Reversible Flag, 250 Series
114-2036	FASTON Receptacle Contacts, All Series (110, 187, 205, 250 and 312)
114-2065	FASTIN-FASTON Receptacle Contacts, All Series (110, 187, 205 and 312)
114-2070	AMPLIVAR FASTON Tab Contact
114-2074	Positive Lock Receptacles, Mark II and Mark III
114-2078	FASTON Tab-Lok Contacts, 187, 205 and 250 Series
114-2079	F-Crimp Flag Receptacle
114-2082	Piggyback Flag Tab, All Series
114-2097	High-temperature FASTON Tab
114-2123	Ultra-Fast, Ultra-Fast Flag and Ultra-Fast Plus FASTON Terminals
114-2124	Ultra-Pod FASTON Fully Insulated Receptacles
114-2126	Center Strip Flag FASTON
114-2144	AMPLIVAR Receptacles, All Series
114-2146	AMPLIVAR F–F Tabs
114-2152	AMPLIVAR Tabs and Receptacles
114-35000	Wire Preparation and Crimp Inspection Guide

Instruction Sheets provide instructions for assembling or applying the product. They are intended for the Manufacturing Assembler or Operator.

Introduction

Operating Temperatures of Materials and Finishes

Brass, phosphor bronze and steel are the normal materials for AMP Terminals. Various finishes are available.

Brass

Plain

Allowable Connection Temperature: 90°C

Plain brass is used frequently, where applications have optional environmental conditions.

Tin Plated

Allowable Connection Temperature: 100°C

Tin plating of receptacle and tab creates satisfactory operation at higher temperatures, and in addition protects the connection against corrosion.

Silver Plated

Allowable Connection Temperature: 130°C

Silver plating connections allow the highest operating temperature for brass and a higher current carrying capacity than plain and tin plated brass.

Phosphor Bronze

Plain

Allowable Connection Temperature: 90°C

Phosphor bronze is used in applications where brass would normally be corroded, for example the various freezing mixtures and ammonias.

Tin Plated

Allowable Connection Temperature: 110°C

Tin plated phosphor bronze for higher temperatures; additional corrosion protection over plain phosphor bronze.

Silver Plated

Allowable Connection Temperature: 130°C

Silver plated connections allow the highest operating temperature for phosphor bronze and higher current carrying capacity than plain and tin plated phosphor bronze.

Steel

Nickel Plated

Allowable Connection Temperature: 250°C

This combination allows a reliable connection at high temperatures, for example in stoves, cooking appliances, etc. To assure optimum performance, these nickel-plated receptacles are used with compatible lead wires and tabs that can be welded to heating units.

Many Part Numbers are recognized under the Component Program of Underwriters Laboratories, Inc., File No. E13288 and Certified by Canadian Standards Association File No. LR 7189.

Contact Product Engineering for details.

Ring Tongue Terminals, Insulation Support

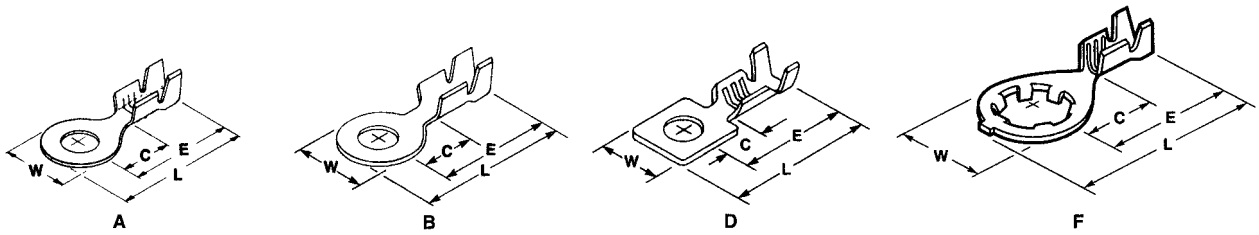

Type	Wire Range AWG	Wire Range mm²	Insul. Size	Stud Size/ Dia.	Stock Thk.	Material and Finish	Dimensions W	Dimensions L	Dimensions E	Dimensions C	Part Numbers	Quick Change Applicator Numbers Model K	Quick Change Applicator Numbers Model T
D	26-24	0.12–0.6	**.035–.065** 0.89–1.65	**.094** 2.39	**.012** 0.31	Brass	**.156** 3.96	**.375** 9.53	**.295** 7.49	**.109** 2.77	61653-1	466185-2	466185-1
A	24-20	0.2–0.6	**.080–.100** 2.03–2.54	8	**.020** 0.51	Tin-Plated Brass	**.290** 7.37	**.630** 16.00	**.485** 12.32	**.250** 6.35	41581	687881-3	687881-1
				10	**.020** 0.51	Tin-Plated Brass	**.290** 7.37	**.630** 16.00	**.485** 12.32	**.250** 6.35	41582	687881-3	687881-1
			.048–.078 1.22–1.98	8	**.020** 0.51	Tin-Plated Brass	**.312** 7.93	**.770** 19.56	**.615** 15.62	**.405** 10.29	42508-2	687961-2	687961-1
A	22-18	0.3–0.9	**.070–.100** 1.78–2.54	1/4"	**.030** 0.76	Tin-Plated Brass	**.468** 11.89	**.982** 24.92	**.748** 19.00	**.437** 11.10	41711	687843-2	687843-1
			.080–.110 2.03–2.79	8	**.020** 0.51	Brass	**.296** 7.52	**.662** 16.81	**.514** 13.06	**.234** 5.94	42036-1	687873-2	687873-1
			.080–.110 2.03–2.79	10	**.020** 0.51	Brass	**.296** 7.52	**.662** 16.81	**.514** 13.06	**.234** 5.04	42036-2	687873-2	687873-1
			.080–.110 2.03–2.79	8	**.020** 0.51	Tin-Plated Brass	**.296** 7.52	**.662** 16.81	**.514** 13.06	**.234** 5.04	42037-1	687832-2	687873-1
			.080–.110 2.03–2.79	10	**.020** 0.51	Tin-Plated Brass	**.296** 7.52	**.662** 16.81	**.514** 13.06	**.234** 5.04	42037-2	687832-2	687873-1
			.120–.170 3.05–4.32	8	**.020** 0.51	Nickel-Plated Steel	**.296** 7.52	**.637** 16.18	**.494** 12.55	**.234** 5.94	485003-1	466446-2	466446-1
F	22-16	0.3–1.4	**.100–.140** 2.54–3.56	**.181** 4.60	**.025** 0.64	Tin-Plated Steel	**.370** 9.40	**.772** 19.61	**.587** 14.91	**.282** 7.16	61556-1	466123-2	466123-1
A	20-16	0.5–1.4	**.100–.140** 2.54–3.56	8	**.025** 0.64	Tin-Plated Brass	**.342** 8.69	**.784** 19.91	**.612** 15.54	**.312** 7.93	41456	687855-2	687855-1
B	20-16	0.5–1.4	**.090–.120** 2.29–3.05	6	**.025** 0.64	Brass	**.230** 5.59	**.460** 11.68	**.352** 8.94	**.165** 4.19	61764-1	466370-2	—
			.100–.135 2.54–3.43	**.156** 3.96	**.025** 0.64	Tin-Plated Brass	**.246** 6.25	**.467** 11.86	**.352** 8.94	**.165** 4.19	41472	687819-2	687819-1
D	20-16	0.5–1.4	**.075–.110** 1.91–2.79	3	**.025** 0.64	Brass	**.204** 5.18	**.460** 11.68	**.352** 8.94	**.165** 4.19	42065	687821-3	687821-1
B	20-16	0.5–1.4	**.075–.110** 1.91–2.79	**.132** 3.35	**.025** 0.64	Brass	**.246** 6.25	**.460** 11.68	**.352** 8.94	**.165** 4.19	42721-1	687821-3	687821-1
A	20-16	0.5–1.4	**.100–.140** 2.54–3.56	10	**.030** 0.76	Br. Tin-Plated Brass	**.342** 8.69	**.784** 19.91	**.612** 15.54	**.312** 7.92	640008-1	466052-2	466052-1
A	20-16	0.5–1.4	**.080–.120** 2.03–3.05	1/4"	**.020** 0.51	Brass	**.468** 11.89	**.982** 24.94	**.748** 19.00	**.437** 11.10	60700-3	466094-2	466094-1
A	18-14	0.8–2.0	**.100–.140** 2.54–3.56	6	**.030** 0.76	Tin-Plated Brass	**.342** 8.69	**.784** 19.91	**.613** 15.57	**.305** 7.75	40723	687858-3	687858-1
			.100–.140 2.54–3.56	10	**.030** 0.76	Brass	**.342** 8.69	**.784** 19.91	**.613** 15.57	**.305** 7.75	40661	687858-3	687858-1
			.100–.140 2.54–3.56	10	**.030** 0.76	Tin-Plated Brass	**.342** 8.69	**.784** 19.91	**.613** 15.57	**.305** 7.75	40725	687858-3	687858-1
			.120–.170 3.05–4.32	6	**.020** 0.51	Brass	**.296** 7.52	**.640** 16.26	**.494** 12.55	**.234** 5.94	41558	687811-3	687811-1

Note: The part numbers listed are for use with existing machine models. For Model "G" applicators part numbers, call the Technical Support Center at 1-800-522-6752.

Ring Tongue Terminals, Insulation Support

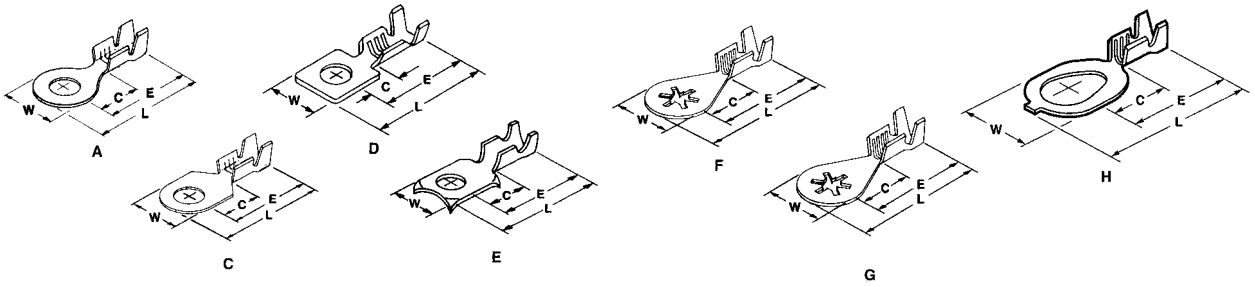

Type	Wire Range AWG	Wire Range mm²	Insul. Size	Stud Size/ Dia.	Stock Thk.	Material and Finish	Dimensions W	Dimensions L	Dimensions E	Dimensions C	Part Numbers	Quick Change Applicator Numbers Model K	Quick Change Applicator Numbers Model T
A	18-14	0.8–2.0	**.120–.170** 3.05–4.32	8	**.020** 0.51	Brass	**.296** 7.52	**.640** 16.26	**.494** 12.55	**.234** 5.94	41559*	687811-3	687811-1
				8	**.020** 0.51	Tin-Plated Brass	**.296** 7.52	**.640** 16.26	**.494** 12.55	**.234** 5.94	41332*	687811-3	687811-1
				10	**.020** 0.51	Brass	**.296** 7.52	**.640** 16.26	**.494** 12.55	**.234** 5.94	41560*	687811-3	687811-1
				10	**.020** 0.51	Tin-Plated Brass	**.296** 7.52	**.640** 16.26	**.494** 12.55	**.234** 5.94	41333*	687811-3	687811-1
			.100–.140 2.54–3.56	8	**.018** 0.46	Brass	**.295** 7.49	**.734** 18.64	**.586** 14.88	**.282** 7.16	60771-1	466095-2	466095-1
				8	**.018** 0.46	Tin-Plated Brass	**.295** 7.49	**.734** 18.64	**.586** 14.88	**.282** 7.16	60771-2	466095-2	466095-1
				1/4"	**.025** 0.64	Tin-Plated Brass	**.342** 8.69	**.783** 19.89	**.612** 15.55	**.305** 7.75	60625-1	466065-2	466065-1
			.080–.150 2.03-3.81	1/4"	**.030** 0.76	Tin-Plated Brass	**.490** 12.45	**1.050** 26.68	**.810** 20.57	**.460** 11.68	61867-2	687784-2	687784-1
F	18-14	0.8–2.0	**.105–.145** 2.67–3.68	8	**.024** 0.61	Stainless Steel	**.370** 9.40	**.772** 19.61	**.587** 14.91	**.282** 7.16	640051-1*	466192-5	466192-4
				8	**.025** 0.64	Tin-Plated Steel	**.370** 9.40	**.772** 19.61	**.587** 14.91	**.282** 7.16	61794-1	466192-5	466192-4
				8	**.025** 0.64	Brass	**.370** 9.40	**.772** 19.61	**.587** 14.91	**.282** 7.16	61794-4	466192-5	466192-4
				10	**.025** 0.64	Tin-Plated Steel	**.370** 9.40	**.772** 19.61	**.587** 14.91	**.282** 7.16	350436-2	466192-5	466192-4
				10	**.025** 0.64	Tin-Plated Brass	**.445** 11.30	**.772** 19.61	**.587** 14.91	**.282** 7.16	61795-3	466192-5	466192-4
				1/4"	**.025** 0.64	Stainless Steel	**.687** 17.45	**1.245** 31.62	**.908** 23.06	**.495** 12.57	63602-1*	687787-2	687787-1
C	18-14	0.8–2.0	**.085–.140** 2.16–3.56	1/4"	**.025** 0.64	Tin-Plated Brass	**.470** 11.94	**.930** 23.62	**.705** 17.91	**.340** 8.64	485029-1	687436-8	687436-4
A	18-14	0.8–2.0	**.120–.170** 3.05–4.32	8	**.020** 0.51	Tin-Plated Brass	**.296** 7.52	**.640** 16.26	—	**.234** 5.94	1217160-1	687811-3	687811-1
H	18-14	0.8–2.0	**.120–.170** 2.03–4.32	6–10	**.016** 0.41	Pre-Tin-Plated Brass	**.300** 7.62	**.755** 19.18	**.595** 15.11	**.280** 7.11	350981-2	466649-2	466649-1
A	18-14	0.8–2.0	**.140–.190** 3.56–4.83	8	**.030** 0.76	Tin-Plated Brass	**.342** 8.69	**.784** 19.91	**.608** 15.44	**.305** 7.75	640102-1	466140-2	466140-1
A	16-14	1.4–2.0	**.120–.180** 3.05–4.57	**.257** 6.53	**.030** 0.76	Tin-Plated Brass	**.470** 11.94	**1.046** 26.57	**.811** 20.60	**.384** 9.75	42751-2	687969-2	687969-1
				.257 6.53	**.030** 0.76	Phos. Bronze	**.470** 11.94	**1.046** 26.57	**.811** 20.60	**.384** 9.75	42751-3	687969-2	687969-1
				.281 7.14	**.030** 0.76	Tin-Plated Brass	**.470** 11.94	**1.046** 26.57	**.811** 20.60	**.384** 9.75	42938-2	687969-2	687969-1
				.323 8.20	**.030** 0.76	Tin-Plated Brass	**.470** 11.94	**1.046** 26.57	**.811** 20.60	**.384** 9.75	42752-2	687969-2	687969-1
D	14-12	2.0–3.0	**.170–.210** 4.32–5.33	10	**.040** 1.02	Tin-Plated Brass	**.425** 10.80	**.972** 24.69	**.750** 19.05	**.344** 8.74	42639-1	671366-1[1]	—
G	12-10	3–6	**.125–.220** 3.18–5.59	10	**.025** 0.64	Tin-Plated Steel	**.470** 11.94	**.995** 25.27	**.770** 19.56	**.340** 8.64	62613-2	466647-2	466647-1
A	12-10	3–6	**.150–.210** 3.81–5.33	10	**.030** 0.76	Tin-Plated Brass	**.470** 11.94	**1.072** 27.23	**.839** 21.31	**.406** 10.31	41124	687832-5	687832-4
				.323 8.20	**.030** 0.76	Tin-Plated Brass	**.470** 11.94	**1.072** 27.23	**.839** 21.31	**.406** 10.31	41126	687832-5	687832-4

Note: The part numbers listed are for use with existing machine models. For Model "G" applicators part numbers, call the Technical Support Center at 1-800-522-6752.
*Not recommended for two wire applications. **Stainless steel wire connectors cannot be certified under the current CSA Standard.
[1] Requires use of AMP-O-LECTRIC Terminating Machine 1-471273-2.

For complete product information, order Catalog 82227

Products for Industrial & Commercial Applications

Dimensions are shown for reference purposes only.

Dimensions are in inches and millimeters unless otherwise specified. Values in brackets are metric equivalents.

Specifications subject to change.

Technical Support Center
1-800-522-6752
www.tycoelectronics.com

Ring Tongue Terminals, Insulation Support

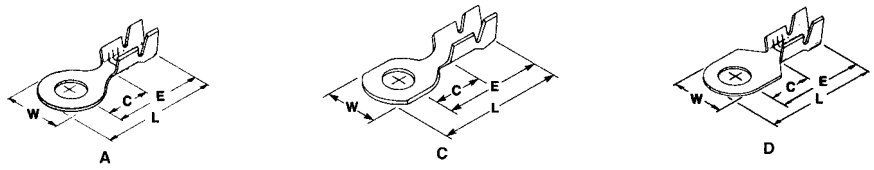

Type	Wire Range AWG	Wire Range mm²	Insul. Size	Stud Size/ Dia.	Stock Thk.	Material and Finish	Dimensions W	Dimensions L	Dimensions E	Dimensions C	Part Numbers	Quick Change Applicator Numbers Model K	Quick Change Applicator Numbers Model T
C	12-10	3–6	**.150–.210** 3.81–5.33	10	**.030** 0.76	Brass	**.470** 11.94	**1.072** 27.23	**.839** 21.31	**.406** 10.31	42722-1	687832-5	687832-4
			.170–.210 4.32–5.33	8	**.040** 1.02	Tin-Plated Brass	**.343** 8.71	**.921** 23.39	**.750** 19.05	**.344** 8.74	42863-2	687727-2	687727-1
			.150–.210 3.81–5.33	1/4"	**.030** 0.76	Tin-Plated Brass	**.470** 11.94	**1.072** 27.23	**.839** 21.31	**.406** 10.31	62691-2	687832-5	687832-4
D	10-6	5–15	**.220–.315** 5.59–8.00	1/4"	**.040** 1.02	Tin-Plated Brass	**.550** 13.97	**1.105** 28.07	**.830** 21.08	**.350** 8.89	42899-2	671510-7[1]	—
D	10-6	5–15	**.220–.315** 5.59–8.00	5/16"	**.040** 1.02	Tin-Plated Brass	**.550** 13.97	**1.105** 28.07	**.830** 21.08	**.350** 8.89	42913-2	671510-7[1]	—
A	10-6	5–15	**.145–.290** 3.68–7.37	1/4"	**.040** 1.02	Tin-Plated Brass	**.490** 12.45	**1.110** 28.19	**.870** 22.10	**.460** 11.68	61868-1	566263-1[1]	—

Note: The part numbers listed are for use with existing machine models. For Model "G" applicators part numbers, call the Technical Support Center at 1-800-522-6752.
[1] Requires use of AMP-O-LECTRIC Terminating Machine 1-471273-2.

Ring Tongue Terminals, Non-Insulation Support

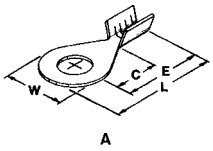

Type	Wire Range AWG	Wire Range mm²	Stud Size/ Dia.	Stock Thk.	Material and Finish	Dimensions W	Dimensions L	Dimensions E	Dimensions C	Part Numbers	Quick Change Applicator Numbers Model K	Quick Change Applicator Numbers Model T
A	20-16	0.5–1.4	2	**.020** 0.51	Brass	**.175** 4.45	**.360** 9.14	**.270** 6.86	**.125** 3.18	40668	687861-2	687861-1
			4	**.020** 0.51	Brass	**.175** 4.45	**.360** 9.14	**.270** 6.86	**.125** 3.18	40777	687861-2	687861-1
			4	**.020** 0.51	Tin-Plated Brass	**.260** 6.60	**.400** 10.16	**.270** 6.86	**.145** 3.63	40810	687864-3	687864-1
A	18-14	0.8–2.0	**.096** 2.44	**.020** 0.51	Brass	**.175** 4.45	**.338** 8.58	**.250** 6.35	**.125** 3.18	41006	687817-2	687817-1
			6	**.020** 0.51	Brass	**.300** 7.62	**.535** 13.59	**.380** 9.65	**.230** 5.84	34848	687813-3	687813-1
			8	**.020** 0.51	Brass	**.300** 7.62	**.535** 13.59	**.380** 9.65	**.230** 5.84	34812	687813-3	687813-1
			10	**.020** 0.51	Tin-Plated Brass	**.343** 8.71	**.611** 15.02	—	**.275** 6.99	40977	687806-3	687806-1
			8	**.020** 0.51	Pre-Ni Plated Steel	**.300** 7.62	**.535** 13.59	**.385** 9.78	**.230** 5.84	41346	687813-3	687813-1
			10	**.020** 0.51	Brass	**.300** 7.62	**.535** 13.59	**.380** 9.65	**.230** 5.84	34839	687813-3	687813-1
			10	**.020** 0.51	Tin-Plated Brass	**.300** 7.62	**.535** 13.59	**.380** 9.65	**.230** 5.84	40595	687813-3	687813-1
			6	**.025** 0.64	Brass	**.300** 7.62	**.570** 14.48	**.420** 10.67	**.230** 5.84	42110-1	687815-5	687815-4
			10	**.025** 0.64	Brass	**.300** 7.62	**.570** 14.48	**.420** 10.67	**.230** 5.84	42110-3	687815-5	687815-4
A	12-10	3–6	10	**.040** 1.02	Brass	**.343** 8.71	**.677** 17.20	**.501** 12.73	**.281** 7.14	41911	687803-5	687803-4

Note: The part numbers listed are for use with existing machine models. For Model "G" applicators part numbers, call the Technical Support Center at 1-800-522-6752.

For complete product information, order Catalog 82227

Ring Tongue Terminals, Insulation Support

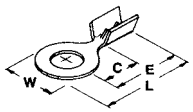

A

Insulation Piercing

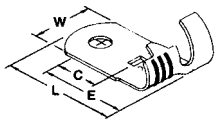

B

Flag

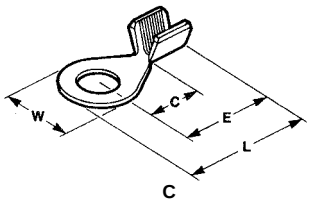

C

AMPLIVAR

Insulation Piercing

Type	Wire Range AWG	Wire Range mm²	Insul. Size	Stud Size/ Dia.	Stock Thk.	Material and Finish	Dimensions W	Dimensions L	Dimensions E	Dimensions C	Part Number	Quick Change Applicator Numbers Model K	Quick Change Applicator Numbers Model T
A	22-20	0.3–0.6	**.050–.065** 1.27–1.65	2	**.013** 0.33	Nickel-Plated Brass	**.165** 4.19	**.417** 10.59	**.300** 7.62	**.125** 3.18	60422-3	466071-2	466071-1

Flag

Type	Wire Range AWG	Wire Range mm²	Insul. Size	Stud Size/ Dia.	Stock Thk.	Material and Finish	Dimensions W	Dimensions L	Dimensions E	Dimensions C	Part Numbers	Quick Change Applicator Numbers Model K	Quick Change Applicator Numbers Model T
B	18-12	0.8–3	**.110–.210** 2.79–5.33	**.172** 4.37	**.018** 0.46	Tin-Plated Brass	**.376** 9.55	**.720** 18.29	**.532** 13.51	**.263** 6.68	42190-1	566510-1[1]	687393-1
				.203 5.16	**.018** 0.46	Tin-Plated Brass	**.376** 9.55	**.720** 18.29	**.532** 13.51	**.263** 6.68	42191-1	566510-1[1]	687393-1

AMPLIVAR

Type	Wire Range AWG	Wire Range mm²	Insul. Size	Hole Dia.	Stud Size/ Dia.	Stock Thk.	Material and Finish	Dimensions W	Dimensions L	Dimensions E	Dimensions C	Part Number	Quick Change Applicator Numbers Model K	Quick Change Applicator Numbers Model T
C	18-14	1.024-1.628	**.100–.140** 2.54-3.56	**.171** 4.34	8	**.020** 0.51	Tin-Plated Brass	**.342** 8.69	**.833** 21.16	**.662** 16.81	**.312** 7.92	60320-2	466691-2	—

[1] Requires use of AMP-O-LECTRIC Terminating Machine 1-471273-2.

Spade Tongue Terminals, Insulation Support

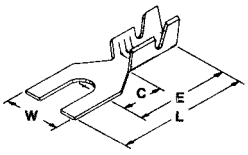

A

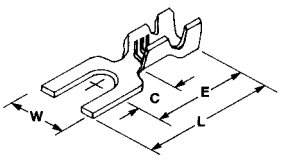

C

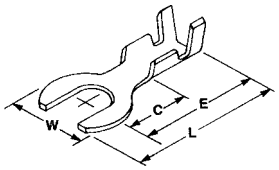

D

Type	Wire Range AWG	Wire Range mm²	Insul. Size	Stud Size/ Dia.	Stock Thk.	Material and Finish	Dimensions W	Dimensions L	Dimensions E	Dimensions C	Part Numbers	Quick Change Applicator Numbers Model K	Quick Change Applicator Numbers Model T
A	26-20	0.12–0.6	**.048–.078** 1.22-1.98	6	**.020** 0.51	Tin-Plated Brass	**.250** 6.35	**.563** 14.30	**.422** 10.72	**.215** 5.46	60124-2	687962-2	687962-1
A	20-16	0.5–1.4	**.090–.130** 2.29–3.30	8	**.020** 0.51	Tin-Plated Brass	**.275** 6.98	**.657** 16.69	**.465** 11.81	**.175** 4.44	41343	687841-2 687841-4†	687841-1 687841-3†
C	20-16	0.5–1.4	**.100–.140** 2.54–3.56	6	**.020** 0.51	Brass	**.280** 7.11	**.755** 19.18	**.525** 13.33	**.225** 5.71	60389-1	466211-4 466211-2†	466211-3 466211-1†
A	18-14	0.8–2	**.100–.140** 2.54–3.56	8	**.018** 0.46	Tin-Plated Brass	**.296** 7.52	**.750** 19.05	**.540** 13.72	**.235** 5.97	60774-2	466095-2 466085-2†	466095-1 466085-1†
				10	**.018** 0.46	Brass	**.296** 7.52	**.750** 19.05	**.540** 13.72	**.235** 5.97	60775-1	466095-2 466085-2†	466095-1 466085-1†
D	10-6	5–15	**.145–.290** 3.68–7.37	10	**.040** 1.02	Tin-Plated Brass	**.375** 9.52	**1.015** 25.78	**.810** 20.57	**.400** 10.16	61855-1	566263-1[1]	—

†Terminals flangable by designated applicator.
[1] Requires use of AMP-O-LECTRIC Terminating Machine 1-471273-2.
Note: The part numbers listed are for use with existing machine models. For Model "G" applicators part numbers, call the Technical Support Center at 1-800-522-6752.

For complete product information, order Catalog 82227

Products for Industrial & Commercial Applications

Dimensions are shown for reference purposes only.

Dimensions are in inches and millimeters unless otherwise specified. Values in brackets are metric equivalents.

Specifications subject to change.

Technical Support Center
1-800-522-6752
www.tycoelectronics.com

Ring Tongue Terminals, Insulation Support

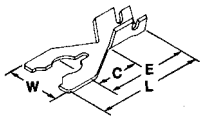

A
Insulation Support

Type	Wire Range AWG	Wire Range mm²	Insul. Size	Stud Size/ Dia.	Stock Thk.	Material and Finish	Dimensions W	Dimensions L	Dimensions E	Dimensions C	Part Numbers	Quick Change Applicator Numbers Model K	Quick Change Applicator Numbers Model T
A	18-14	0.8–2	**.100–.140** 2.54–3.56	8	**.030** 0.76	Tin-Plated Brass	**.343** 8.71	**.752** 19.10	**.612** 15.54	**.312** 7.92	42168-2	687859-2	687859-1
				10	**.030** 0.76	Tin-Plated Brass	**.343** 8.71	**.752** 19.10	**.612** 15.54	**.312** 7.92	42169-2	687859-2	687859-1

Spade Tongue Terminals

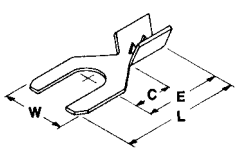

A

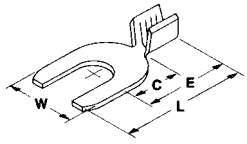

B

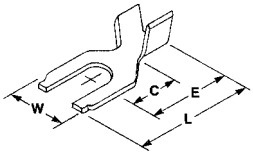

D

Non-Insulation Support

Type	Wire Range AWG	Wire Range mm²	Insul. Size	Stud Size/ Dia.	Stock Thk.	Material and Finish	Dimensions W	Dimensions L	Dimensions E	Dimensions C	Part Numbers	Quick Change Applicator Numbers Model K	Quick Change Applicator Numbers Model T
D	18-14	0.8–2	—	8	**.025** 0.64	Brass	**.275** 6.99	**.482** 12.24	**.295** 7.49	**.175** 4.45	40705	687810-6 687810-8†	687810-5 687810-7†
				8	**.025** 0.64	Tin-Plated Brass	**.275** 6.99	**.482** 12.24	**.295** 7.49	**.175** 4.45	41473	687810-6 687810-8†	687810-5 687810-7†
B	12-10	3–6	—	8	**.030** 0.76	Tin-Plated Brass	**.312** 7.92	**.688** 17.48	**.450** 11.43	**.235** 5.97	42113-2	687833-2 687833-3†	687833-1 —

Spade Insulation Piercing

Type	Wire Range AWG	Wire Range mm²	Insul. Size	Stud Size/ Dia.	Stock Thk.	Material and Finish	Dimensions W	Dimensions L	Dimensions E	Dimensions C	Part Number	Quick Change Applicator Numbers Model K	Quick Change Applicator Numbers Model T
A	28-22	0.08–0.4	**.035–.040** 0.89–1.02	5	**.016** 0.41	Tin-Plated Brass	**.250** 6.35	**.578** 14.68	**.422** 10.72	**.215** 5.46	61498-2	466003-2	—

† Terminals flangable by designated applicator.

Splices

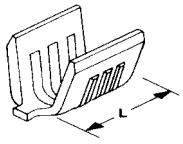

A
Side Feed Splices
Non-Insulation Support

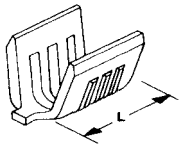

A
End Feed Splices
Non-Insulation Support

Side Feed

Type	Wire Range CMA	Wire Range mm²	Stock Thk.	Material	Dim. L	Part Numbers	Applicator Numbers
A	10000–16000	5.07-8.11	**.031** 0.79	Brass	**.265** 6.73	61299-3	566347-1
			.031 0.79	Tin-Plated Brass	**.265** 6.73	61299-2	566347-1
			.031 0.79	Tin-Plated Steel	**.250** 6.35	63414-1	566347-1

End Feed

Type	Wire Range CMA	Wire Range mm²	Stock Thk.	Material	Dim. L	Part Numbers	Applicator Numbers
A	2000–5300	1.01-2.69	**.020** 0.51	Tin-Plated Brass	**.156** 3.94	40868	670786-3
A	3232–8282	1.64-4.2	**.020** 0.51	Tin-Plated Brass	**.152** 3.84	40552	672180-4

For complete product information, order Catalog 82227

Products for Industrial & Commercial Applications

Dimensions are shown for reference purposes only.

Dimensions are in inches and millimeters unless otherwise specified. Values in brackets are metric equivalents.

Specifications subject to change.

Technical Support Center
1-800-522-6752
www.tycoelectronics.com

Receptacles

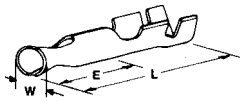

A

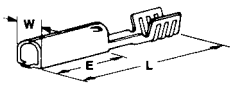

C

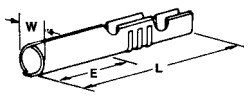

F

Type	Wire Range		Insul. Size	Stud Size/ Dia.	Stock Thk.	Material and Finish	Dimensions			Part Numbers	Quick Change Applicator Numbers	
	AWG	mm²					W	L	E		Model K	Model T
A	24-20	0.2–0.6	**.048–.071** 1.22–1.80	**.040** 1.02	**.012** 0.31	Tin-Plated Phos. Br.	**.095** 2.41	**.450** 11.43	**.220** 5.59	42428-5[1]	466388-2	466388-1
F	24-20	0.2–0.6	**.090–.130** 2.27–3.30	**.093** 2.36	**.010** 0.25	Brass	**.115** 2.92	**.560** 14.23	**.250** 6.35	60469-1	466089-2	466089-1
A	24-20	0.2–0.6	**.048–.071** 1.22–1.80	**.055** 1.40	**.013** 0.33	Tin-Plated Phos. Br.	**.095** 2.41	**.450** 11.43	**.220** 5.59	60885-2[2]	466388-2	466388-1
C	18-14	0.9–2.0	—	**.109** 2.77	**.014** 0.36	Tin-Plated Brass	**.133** 3.38	**.645** 16.38	**.300** 7.62	61012-3[3]	466061-3	466061-1

[1] Reverse reel of 42428-2.
[2] Reverse reel of 42429-2.
[3] Can be molded.

SHUR-PLUG Terminals

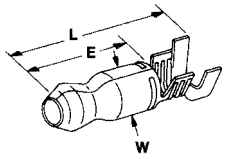

A

.180 [4.57] Diameter

Type	Wire Range		Insul. Size	Stock Thk.	Material and Finish	Dimensions			Part Number	Quick Change Applicator Numbers	
	AWG	mm²				E	L	W		Model K	Model T
A	18-14	0.9–2	**.090–.125** 2.29–3.18	**.018** 0.46	Tin-Plated Brass	**.447** 11.35	**.740** 18.80	**.180** 4.57	62739-1[1]	466081-2	466081-1

[1] Can be molded.

SHUR-PLUG Receptacles

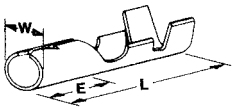

B

.156 [3.96] Diameter

Type	Wire Range		Insul. Size	Stock Thk.	Material and Finish	Dimensions			Part Number	Quick Change Applicator Numbers	
	AWG	mm²				E	L	W		Model K	Model T
B	18-14	0.9–2	**.130–.175** 3.30–4.45	**.016** 0.41	Brass	**.345** 8.76	**.690** 17.53	**.190** 4.83	42142-2	687914-3	687914-1

Note: The part numbers listed are for use with existing machine models. For Model "G" applicators part numbers, call the Technical Support Center at 1-800-522-6752.

For complete product information, order Catalog 82227

SHUR-PLUG Receptacles

.180 [4.57] Diameter

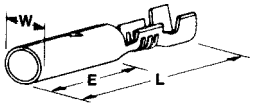

A

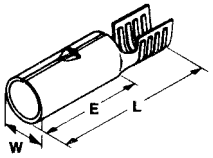

C

Type	Wire Range		Insul. Size	Stock Thk.	Material and Finish	Dimensions			Part Numbers	Quick Change Applicator Numbers	
	AWG	mm²				E	L	W		Model K	Model T
A	18-14	0.9–2	**.090–.125** 2.29–3.18	**.016** 0.41	Tin-Plated Brass	**.420** 10.67	**.785** 19.94	**.208** 5.28	60798-4	466093-2	466093-1
			.090–.125 2.29–3.18	**.016** 0.41	Brass	**.420** 10.67	**.785** 19.94	**.208** 5.28	60799-2[1]	466093-2	466093-1
			.090–.125 2.29–3.18	**.016** 0.41	Tin Ni-Plated Brass	**.420** 10.67	**.785** 19.94	**.208** 5.28	60799-4[1]	466093-2	466093-1
			.090–.125 2.29–3.18	**.016** 0.41	Tin-Plated Brass	**.420** 10.67	**.895** 22.73	**.208** 5.28	60799-5	466093-2	466093-1
			.120–.175 3.05–4.45	**.016** 0.41	Tin-Plated Brass	**.420** 10.67	**.785** 19.94	**.208** 5.28	61412-2	466175-3	466175-1
C	14-10	2–6	—	**.016** 0.41	Tin-Plated Brass	**.420** 10.67	**.720** 18.29	**.208** 5.28	42868-2	466643-2	466643-1
			—	**.016** 0.41	Brass	**.420** 10.67	**.720** 18.29	**.208** 5.28	42891-1[1]	466643-2	466643-1
			—	**.016** 0.41	Tin-Plated Brass	**.420** 10.67	**.720** 18.29	**.208** 5.28	42891-2[1]	466643-2	466643-1

[1] No indent.

Note: The part numbers listed are for use with existing machine models. For Model "G" applicators part numbers, call the Technical Support Center at 1-800-522-6752.

Tab Receptacles

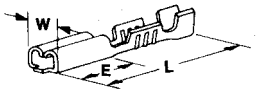

B

Type	Wire Range		Insul. Size	Stock Thk.	Material and Finish	Fits Tab	Dimensions			Part Number
	AWG	mm²					E	L	W	
B	24-20	0.2–0.6	**.040–.080** 1.02–2.03	**.010** 0.25	Tin-Plated Brass	**.031 x .062** 0.79 x 1.57	**.187** 4.75	**.462** 11.73	**.090** 2.29	61454-1[1]

[1] Loose Piece form, of Part No. 60900-1.

Technical Documents

Various technical documents are available for your use:

Product Specifications describe technical performance characteristics and verification tests. They are intended for the Design, Component and Quality Engineer.

108-16000	Crimping AMPLIVAR ring terminals
108-16001	Crimping extruding ring terminals
108-1376	Grounding clip
108-2027	.156 [3.96] diameter SHUR-PLUG and receptacles

Application Specifications describe requirements for using the product in its intended applications and/or crimping information. They are intended for the Packaging and Design Engineer and the Machine Setup Person.

114-2084	Ring and spade terminals
114-2089	Flanged spade terminals
114-2109	Insulation piercing ring and spade terminals
114-2080	Pin receptacle contacts
114-2083	Pin receptacle contact
114-2042	.156 [3.96] diameter SHUR-PLUG and receptacle
114-2017	.180 [4.57] diameter SHUR-PLUG and receptacle
114-2088	Pigtail and thru splices
114-2093	Carbon brush contacts
114-2129	Grounding clip

Product Facts

- **Compression crimp eliminates cold solder points, weld burns and wire enbrittlement usually connected with thermal-type terminations**
- **Excellent tensile strength—vibration resistant**
- **Provides a superior electrical connection that is free of contaminants such as stripper residue and solder flux**
- **Precision formed, strip-fed terminals and splices terminated in AMP Automatic Machines assure highest possible production rates at the lowest applied cost**
- **Low wire consumption and the elimination of rejects caused by solder flux or heat damage results**
- **Precisely controlled crimp termination helps eliminate human error for maximum reliability**

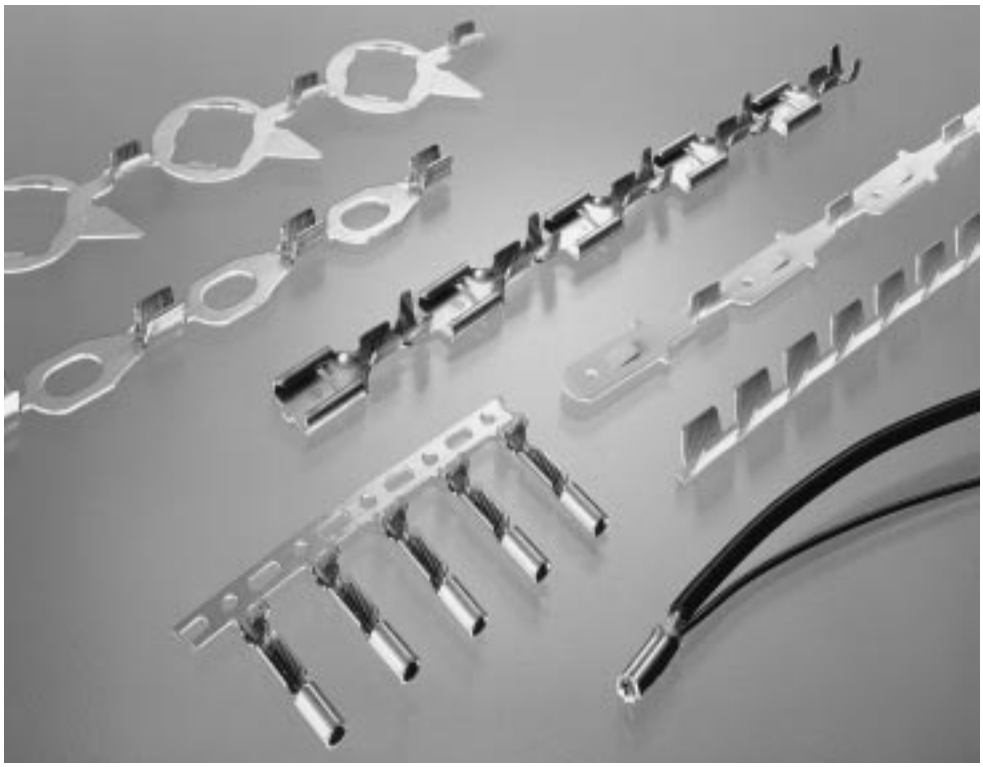

The basic design of the AMPLIVAR wire barrel encompasses two main areas: the burrs at the top of the serrations and the serrations themselves. During the crimping operation, the burrs pierce the insulation of the magnet wire and extrude the bare conductors into the serrations—creating ultimate metal-to-metal contact.

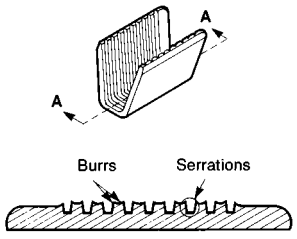

Section AA



AMPLIVAR Splices are specifically designed to terminate magnet wire to itself or in combination with standard solid or stranded lead wire. The AMPLIVAR product line will accommodate a wire range from 400 to 13,000 CMA.

In a one-step crimping operation, the magnet wire is automatically ring-stripped of its insulation as it is forced into the wire barrel serrations. The result produces a high tensile strength, air-sealed connection that is as resistant to corrosion as the insulated conductor.

As many as three magnet wires can be terminated simultaneously in one barrel. In addition, copper or aluminum magnet wire, or a combination of both, can be terminated. When required, copper or aluminum magnet wire can be combined with prestripped standard solid or stranded lead wires.

Depending on your specific application, AMPLIVAR Splices are available in 5, 7 and 9 serration versions as well as miniature and subminiature designs for terminations in the 400 to 1600 CMA range.

For complete product information, order Catalog 82221

Products for Industrial & Commercial Applications
Dimensions are shown for reference purposes only.
Dimensions are in inches and millimeters unless otherwise specified. Values in brackets are metric equivalents.
Specifications subject to change.
Technical Support Center
1-800-522-6752
www.tycoelectronics.com

General Application Guidelines

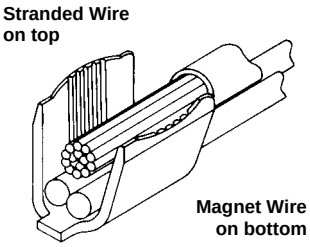

To assist you in obtaining the optimum AMPLIVAR termination, the following guidelines are recommended:

1. All magnet wires must be placed in the bottom of the wire barrel before crimping. If lead wire is to be crimped in the same termination, it should be placed on top of the magnet wires.
2. Wire barrels are designed to accept a maximum of three insulated magnet wires plus stranded lead wires.
3. The ratio of magnet wire diameters crimped in any wire barrel should not exceed 2:1. This ratio is approximately a range from the largest to the smallest magnet wire of six sizes.
4. The sum of the circular mil area (CMA) of the magnet wires and any lead wires should not exceed the capacity of the splice.
5. The sum of the diameters of the individual magnet wires plus twice the terminal stock thickness must be equal to or less than the crimp width.
6. Magnet wire of 26 AWG [0.404 mm] or smaller should be used with 7-serration splices having "shallow serrations," and magnet wire of 28 AWG [0.32 mm] or smaller should be used with 9-serration splices having "shallow serrations" (part numbers identified with asterisk [*] are in the tabular data on the following technical pages).
7. Magnet wire of 20 AWG [0.813 mm] or larger having an insulation thickness heavier than "single film coated," should not be used with splices having "shallow serrations" (those part numbers marked with an asterisk [*] in the tabular data on the following technical pages).
8. When aluminum magnet wire is used, splices and terminals must be tin plated.
9. Consult AMP for splice selection and recommendations for all non-standard applications.

For detailed specifications on crimping AMPLIVAR splices, request the appropriate AMP Specification Publication.

Test Results

AMPLIVAR products have been subjected to the following tests without significant millivolt increase:

Temperature Cycling—
25 cycles with each cycle consisting of 30 minutes at 125°C followed by 30 minutes at –65°C

Heat Age—
96 hours at 150°C

Thermal Shock—
25 cycles with each cycle consisting of 30 minutes at 150°C followed by 30 minutes at –65°C

Salt Spray—
96 hours at 35°C with a 5% salt solution spray

Humidity—
96 hours at 90–95% relative humidity and 40°C

Current Cycling—
10,000 cycles with each consisting of 3 minutes on and 3 minutes off at a current (25 amperes) which establishes a wire temperature of 150°C (see graphical results below)

TYPICAL CURRENT CYCLING TEST RESULTS

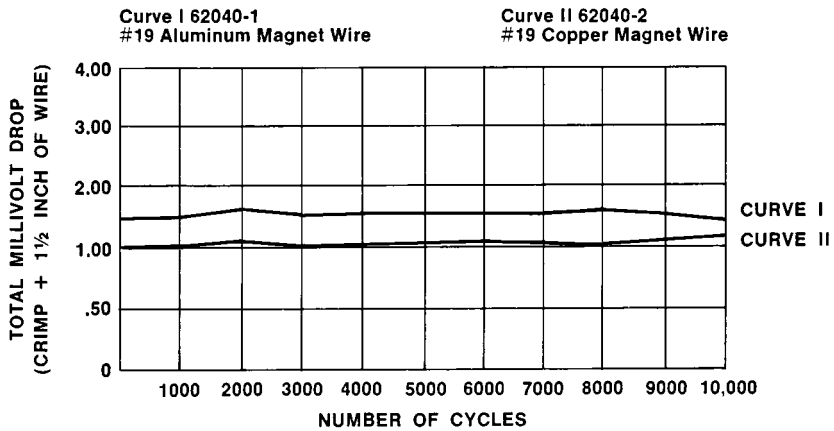

Products for Industrial & Commercial Applications
Dimensions are shown for reference purposes only.
Dimensions are in inches and millimeters unless otherwise specified. Values in brackets are metric equivalents.
Specifications subject to change.
Technical Support Center
1-800-522-6752
www.tycoelectronics.com

Suggested Splice Selection Procedure

Use the following guide to help you to determine the proper splice for your application:

1. Use 9-serration splices, tin plated when terminating aluminum magnet wire or combinations with aluminum magnet wire.
2. Use 9-serration splices for hermetic and severe environment applications.
3. Use splices identified with an asterisk [*] when terminating 7-serration 26 AWG [0.404 mm] or smaller wires and 9-serration 28 AWG [0.32 mm] or smaller wires.
4. Calculate the total CMA of the magnet wires plus any lead wires to be terminated. Always use the coated magnet wire for CMA (see pages 13–16).
5. Calculate the total magnet wire diameters (see pages 13 and 14).
6. Select a splice for trial calculations. It should have the proper CMA range. Plating finish should be considered at this time.
7. Calculate the sum of the magnet wire diameters plus two splice stock thicknesses. If this total is less than the crimp width of the splice selected, it may be used. If the total is greater than the crimp width, a splice with a greater crimp width must be selected. Consult AMP for special wide tooling recommendations.

Example:

Selection of a Pigtail Splice to terminate the following wires:
One 28 AWG [0.32 mm] copper magnet wire.
One 22 AWG [0.643 mm] aluminum magnet wire.
One 18 AWG [0.8–0.9 mm^2] 19-strand copper lead wire.

Calculate the total CMA (Procedure 4):
28 AWG [0.32 mm] coated magnet wire.....185 CMA
22 AWG [0.643 mm] coated magnet wire.....708 CMA
18 AWG [0.8–0.9 mm^2] stranded lead wire .....1608 CMA
Total..... 2501 CMA

Calculate the sum of the magnet wire diameters (Procedure 5):
28 AWG [0.32 mm] coated magnet wire ..... .0136 [0.35]
22 AWG [0.643 mm] coated magnet wire ..... .0266 [0.68]
Total ..... .0402 [1.03]

Select a terminal for trial calculations. Splice No. 62305-2, page 4 (Procedure 6):
CMA range 600–3000
Stock thickness..... .016 [0.41]
Crimp width..... .110 [2.79]
9-serration, tin plated for aluminum magnet wire (Procedure 1).
Splice identified with asterisk [*] for 28 AWG [0.32 mm] (Procedure 3).

Calculate the sum of the magnet wire diameters plus two splice stock thicknesses (Procedure 7):
$.0402 + (.016 \times 2) = .0722$
$[1.02 + (0.41 \times 2) = 1.84]$
.0722 [1.84] is less than the splice crimp width of .110 [2.79]; therefore, Part No. 62305-2 may be used.

AMPLIVAR Splices

9 Serrations—Pigtail Type

Product Facts
(Plus All 7 Serration Facts)

- Splice length is increased on larger CMA splices for improved performance
- Splice CMA ranges are overlapped so that two splices are available for any given CMA
- Serration depths are varied within the splice to give optimum electrical/mechanical performance on all wire sizes
- Serration sidewall angles are varied to allow better wire stripping and serration fill
- Flat bottom of splice helps keep magnet wires on bottom as required during crimping
- Magnet wires 28 AWG [0.32 mm] and larger may be terminated without requiring shallow serrations

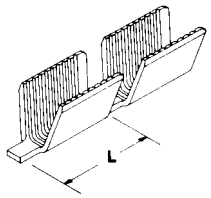

Wire Range CMA	Stock Thickness	Crimp Width	Dim. L	Material	Part Number
400–1500	**.016** 0.41	**.080** 2.03	**.225** 5.72	Tin Plated Brass	62303-2*
600–3000	**.020** 0.51	**.110** 2.79	**.225** 5.72	Tin Plated Brass	62304-2
600–3000	**.016** 0.41	**.110** 2.79	**.225** 5.72	Tin Plated Brass	62305-2*
1500–5000	**.020** 0.51	**.110** 2.79	**.225** 5.72	Tin Plated Brass	62306-2
1500–5000	**.016** 0.41	**.110** 2.79	**.225** 5.72	Tin Plated Brass	62307-2*
3000–7000	**.020** 0.51	**.140** 3.56	**.265** 6.73	Tin Plated Brass	62308-2
5000–10,000	**.025** 0.64	**.180** 4.57	**.265** 6.73	Tin Plated Brass	62309-2
7000–13,000	**.025** 0.64	**.180** 4.57	**.265** 6.73	Tin Plated Brass	62310-2
10,000–22,000	**.030** 0.76	**.220** 5.59	**.340** 8.64	Tin Plated Brass	62311-2

*These splices are recommended for applications using wire size 28 AWG [0.32 mm] or smaller.

7 Serrations—Pigtail Tail

Product Facts

- 6° taper on both crimper and anvil improves flex life of termination
- Longer “flat” on tooling improves electrical performance (.125 vs. .080 [3.18 vs. 2.03])
- Radius on wire entry end of splice prevents nicking wires and improves mechanical performance
- Additional serrations enhance stability of crimp
- Serrations are offset to sheared end to place additional serrations in “electrical” portion of crimped splice

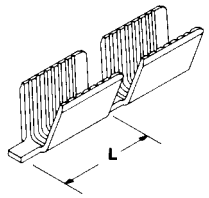

Wire Range CMA	Stock Thickness	Crimp Width	Dim. L	Material	Part Number
600–3000	**.020** 0.51	**.110** 2.79	**.225** 5.72	Brass	62000-1
600–3000	**.020** 0.51	**.110** 2.79	**.225** 5.72	Brass	62157-1*
600–3000	**.020** 0.51	**.110** 2.79	**.225** 5.72	Tin Plated Brass	62000-2
600–3000	**.020** 0.51	**.110** 2.79	**.225** 5.72	Tin Plated Brass	62157-2*
1500–5000	**.020** 0.51	**.110** 2.79	**.225** 5.72	Brass	62040-2
1500–5000	**.020** 0.51	**.110** 2.79	**.225** 5.72	Tin Plated Brass	62040-1
3000–7000	**.020** 0.51	**.140** 3.56	**.225** 5.72	Brass	62001-1
3000–7000	**.020** 0.51	**.140** 3.56	**.225** 5.72	Tin Plated Brass	62001-2
7000–12,000	**.025** 0.64	**.250** 6.35	**.225** 5.72	Tin Plated Brass	62295-1
7000–12,000	**.025** 0.64	**.250** 6.35	**.225** 5.72	Brass	62295-2
7000–13,000	**.025** 0.64	**.180** 4.57	**.225** 5.72	Tin Plated Brass	62002-2

*These splices are recommended for applications using wire size 26 AWG [0.404 mm] or smaller.

For complete product information, order Catalog 82221

Products for Industrial & Commercial Applications
Dimensions are shown for reference purposes only.
Dimensions are in inches and millimeters unless otherwise specified. Values in brackets are metric equivalents.
Specifications subject to change.
Technical Support Center
1-800-522-6752
www.tycoelectronics.com

AMPLIVAR Splices

5 Serrations—Thru Type

Product Facts

- Wide range of thru splices
- Serrations centered in splice to achieve optimum electrical and mechanical performance in a thru splice
- CMA range accepts a wide variety of wire sizes and combinations

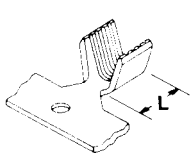

A

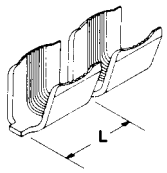

B

Type	Wire Range CMA	Stock Thickness	Crimp Width	Dim. L	Material	Part Number
A	2000–5400	**.020** 0.51	**.110** 5.08	**.235** 5.97	Brass	63564-1
A	10,000–16,000	**.032** 0.80	**.180** 4.57	**.267** 6.78	Tin Plated Brass	63561-1
A	10,400–22,900	**.030** 7.62	**.300** 7.62	**.310** 7.87	Tin Plated Brass	63562-1
B	600–3000	**.020** 0.51	**.110** 2.79	**.225** 5.72	Brass	42076-0
B	600–3000	**.020** 0.51	**.110** 2.79	**.225** 5.72	Brass	42192-1*
B	600–3000	**.020** 0.51	**.110** 2.79	**.225** 5.72	Tin Plated Brass	42192-2*
B	1500–5000	**.020** 0.51	**.110** 2.79	**.225** 5.72	Brass	41765
B	1500–5000	**.020** 0.51	**.110** 2.79	**.225** 5.72	Brass	42119-1*
B	1500–5000	**.020** 0.51	**.110** 2.79	**.225** 5.72	Tin Plated Brass	41899
B	3000–7000	**.020** 0.51	**.140** 3.56	**.225** 5.72	Brass	41766
B	3000–7000	**.020** 0.51	**.140** 3.56	**.225** 5.72	Tin Plated Brass	41900
B	7000–13,000	**.025** 0.64	**.180** 4.57	**.225** 5.72	Brass	41770
B	7000–13,000	**.025** 0.64	**.180** 4.57	**.225** 5.72	Tin Plated Brass	41904

*These splices are recommended for applications using wire size 26 AWG [0.404 mm] or smaller.

Miniature Splice—Pigtail Type

Product Facts

- The compactness of these splices makes them ideal for use in small subfractional motors, transformers, relays, solenoids, indicator lamps and small appliance terminations
- These splices provide the same reliability as the larger AMPLIVAR splices

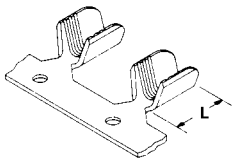

Wire Range CMA	Stock Thickness	Crimp Width	Dim. L	Material	Part Number
200–850	**.012** 0.30	**.055** 1.40	**.195** 4.95	Tin Plated Brass	63431-1
480–1700	**.014** 0.36	**.080** 2.03	**.195** 4.95	Tin Plated Brass	62341-1

Subminiature Splice Thru or Pigtail Type

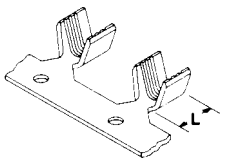

Wire Range CMA	Stock Thickness	Crimp Width	Dim. L	Material	Part Number
100–300	**.010** 0.25	**.042** 1.08	**.080** 2.03	Tin Plated Brass	63621-1
400–1600	**.016** 0.41	**.070** 1.78	**.100** 2.54	Tin Plated Brass	62194-2

For complete product information, order Catalog 82221

Products for Industrial & Commercial Applications
Dimensions are shown for reference purposes only.
Dimensions are in inches and millimeters unless otherwise specified. Values in brackets are metric equivalents.
Specifications subject to change.
Technical Support Center 1-800-522-6752 www.tycoelectronics.com

Product Facts

- Terminates copper magnet wire
- Terminates all magnet wire film insulations
- Eliminates need for prestripping conductors
- Excess magnet wire is automatically trimmed during the termination procedure
- Simultaneously terminates two wires of the same size in one terminal (for splicing or bi-filing)
- Many lead wire attachment techniques available
- Eliminates post insulating
- Low insertion force
- Available in strip form or loose piece for semi-automatic, automatic or hand tool application
- Capable of producing up to 2000 terminations per hour with semi-automatic bench machine (based on four terminations per coil)
- High-speed automatic coil-winding machine terminations provide uniform reliability at lowest possible applied cost
- May be mass terminated
- Clean metal-to-metal interface produces stable, gas-tight electrical terminations free of oxides and other contaminants
- Eliminates lead wire handling throughout entire production process
- Varnish resist tab terminals are available for special applications
- Those products indicated are recognized under the Component Recognition Program of Underwriters Laboratories Inc., File No. E13288

Advantages

- Low cost
- Safety
- Versatility
- Reliability

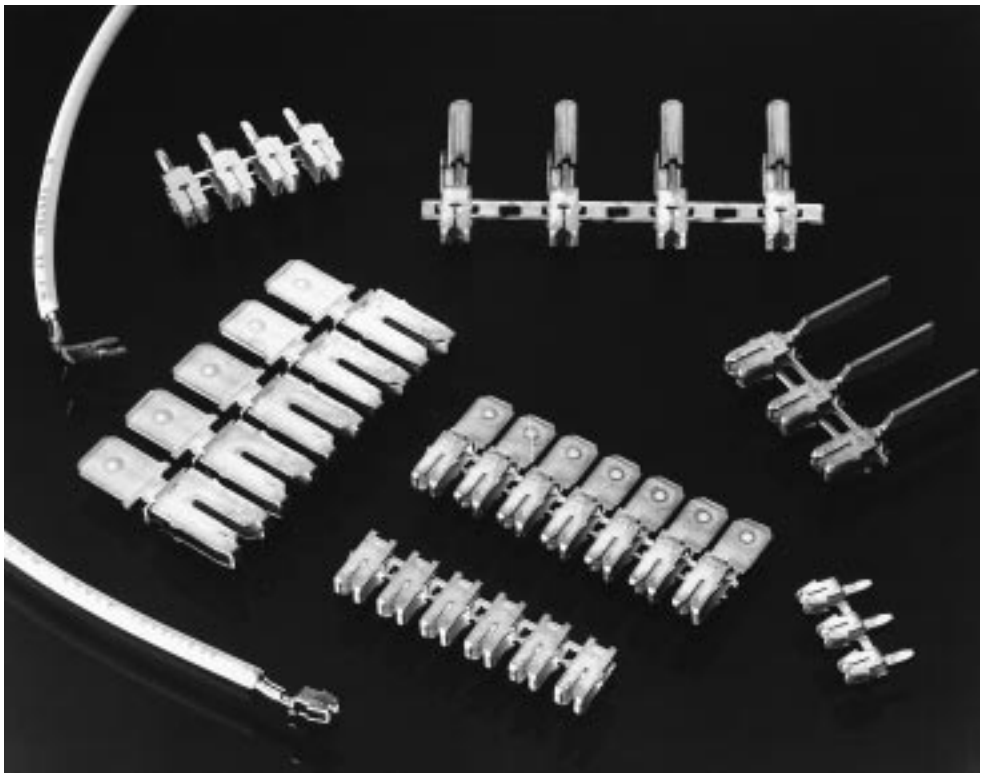

Standard MAG-MATE Terminals bring insulation displacement technology to magnet wire terminations. The technique eliminates the need for prestripping the conductors. Insulated wire is positioned so precisely by the controlled terminating slots of the "U"-shaped design that the stamped and formed terminals can be pushed over the wire.

When application tooling pushes the terminal, the wire moves through the terminal's wide lead-in area, reducing it in width and reshaping it into an oval. As the wire passes into the narrow precise slots, small stripping devices penetrate the film insulation. Complete insulation displacement occurs and four areas of contact are made as the conductor is forced deep into the slots by the terminal insertion process.

During the process, the wiping action between the wire and terminal removes all oxides or other contaminants present on both the conductor and the terminal slot walls, producing a clean, metal-to-metal interface and a stable, gas-tight electrical termination. The large areas of contact between the wire and the slot walls ensure reliable conduction of high currents.

Residual spring energy in the terminal causes the side walls of each slot to function as opposing cantilever beams. This constant pressure results in an intimate metal-to-metal contact, providing a reliable, long-term connection.

For complete product information, order Catalog 82221

Products for Industrial & Commercial Applications

Dimensions are shown for reference purposes only.

Dimensions are in inches and millimeters unless otherwise specified. Values in brackets are metric equivalents.

Specifications subject to change.

Technical Support Center
1-800-522-6752
www.tycoelectronics.com

Poke-In Terminals

Terminals

Material and Finish:

Tin plated brass

Typical Cavity Size 2:

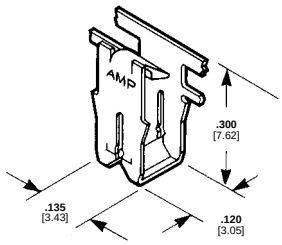

Copper Magnet Wire Range		Lead Wire Range[4]		Stock Thickness	Part Numbers[1,*]
AWG	mm	AWG	mm²		
33–31[2]	0.18–0.23	20–18	0.5–0.9	**.010** 0.25	62431-1
31-28	0.23–0.32	20–18	0.5–0.9	**.012** 0.30	1217234-1
30–27[2]	0.25–0.36	20–18	0.5–0.9	**.012** 0.30	63636-1[5, 6]
				.012 0.30	62429-1
27-26[2]	0.36-0.40	27–26	0.36–0.40	**.016** 0.41	1217192-1[8]
27–23[2]	0.36–0.57	20–18	0.5–0.9	**.016** 0.41	62935-1
25.5-24[2]	0.43-0.51	25.5–24	0.43–0.51	**.016** 0.41	1217191-1[8]
25–22[7]	0.45–0.64	20–18	0.5–0.9	**.016** 0.41	63658-1
23.5-22[3]	0.54-0.64	23.5-22	0.54–0.6	**.016** 0.41	1217190-1[8]
22–20[3]	0.64–0.81	20–18	0.5–0.9	**.016** 0.41	62420-1
19–17[3]	0.91–1.15	20–18	0.5–0.9	**.016** 0.41	62833-1

[1] Strip product part numbers shown. See page 7145 for loose piece part number cross reference and tooling.
[2] Two magnet wires may be terminated in the same terminal slot if diameters are equal.
[3] Single magnet wire only.
[4] Solid or overcoated stranded lead wire only. Product will also accept Poke-In Tab Terminal shown below
[5] Special Nicker location.
[6] Special cavity detail required.
[7] Two magnet wires may be terminated in the same terminal slot if diameters are equal, except 22 AWG [0.64 mm].
[8] Tin over nickel plating, special leaf.
* Recognized under the Component Program of Underwriters Laboratories, Inc.

Tab Terminals

Materials:

Tin plated brass

A

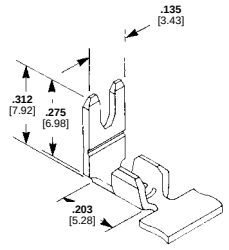

B

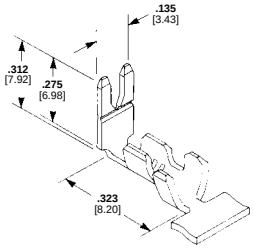

Type	Lead Wire Size		Ins. O.D.	Stock Thickness	Part Numbers[1]
	AWG	mm			
A	22–18	0.3–0.9	—	**.018** 0.46	62895-1*
B	22–18	0.3–0.9	**.060-.100** 1.52-2.54	**.020** 0.51	62896-1*

[1] Strip product part numbers.
* Recognized under the Component Program of Underwriters Laboratories, Inc.
Note: All tab terminals accept stranded, fused stranded or solid lead wire

Terminal

Material and Finish:

Tin plated brass, except where noted.

Typical Cavity Size 1:

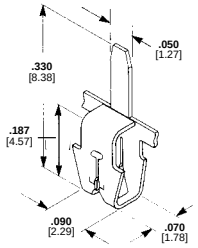

Posted Terminals

Copper Magnet Wire Range		Stock Thickness	Part Numbers
AWG	mm		
33–31[2]	0.18–0.23	**.010** 0.25	62934-1[1]
29–27[2]	0.29–0.36	**.012** 0.30	1217196-1[3]

[1] Loose piece product part number. Tin over copper plating.
[2] Two magnet wires may be terminated in the same terminal slot if diameters are equal.
[3] Tin over nickel plating.

For complete product information, order Catalog 82221

Products for Industrial & Commercial Applications

Dimensions are shown for reference purposes only.

Dimensions are in inches and millimeters unless otherwise specified. Values in brackets are metric equivalents.

Specifications subject to change.

Technical Support Center
1-800-522-6752
www.tycoelectronics.com

110 Series Poke-In Combination FASTON Tab Terminals

Material:
Tin plated brass

Typical Cavity Size 2:

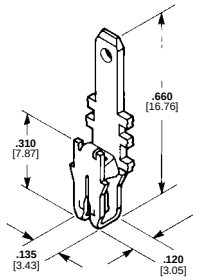

Copper Magnet Wire Range		Lead Wire Range[3]		Tab Size	Stock Thickness		Part Number[1,4,*]
AWG	mm	AWG	mm		Tab Section	Mag. Wire Section	
28–24[2]	0.32–0.51	20–18	0.5–0.8	**.020 × .110** 0.51 × 2.79	**.020** 0.51	**.012** 0.30	63062-1

[1] Strip product part numbers.
[2] Two magnet wires may be terminated in the same terminal slot if diameters are equal, except 22 AWG [0.643 mm] which accepts single magnet wire only.
[3] Solid or overcoated stranded lead wire only.
[4] Varnish resist coating.
* Recognized under the Component Program of Underwriters Laboratories, Inc.
Notes: [1] After insertion into plastic cavity, tab portion must be bent over 45°–90° or potted in to prevent pullout when mating receptacle is disconnected.
[2] .110 [2.79] Tab Terminals mate with compatible FASTON receptacles. Request AMP Catalog 82004.

187 Series FASTON Tab Terminals

Material:
Tin plated brass

Typical Cavity Sizes:
Type A—Cavity Size 2

A[5]
.300 [7.62] Box

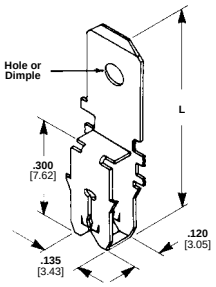

B
.300 [7.62] Box Latch Type, Wide Body

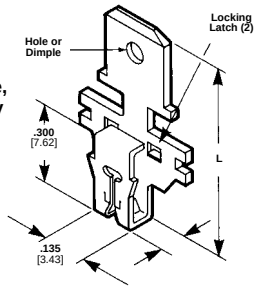

Type	Copper Magnet Wire Range		L Dimension	Tab Feature	Tab Size	Stock Thickness		Part Numbers[1]
	AWG	mm				Tab Section	Mag. Wire Section	
A	27–23[2]	0.36–0.57	**.625** 15.88	Dimple	**.020 × .187** 0.51 × 4.75	**.020** 0.51	**.016** 0.41	62514-1*
	22–20[3]	0.64–0.81	**.625** 15.88	Hole	**.020 × .187** 0.51 × 4.75	**.020** 0.51	**.016** 0.41	63663-1[4]
B	27–23[3]	0.36–0.57	**.625** 15.88	Dimple	**.020 × .187** 0.51 × 4.75	**.020** 0.51	**.016** 0.41	63256-1

[1] Strip product part numbers shown.
[2] Two magnet wires may be terminated in the same terminal slot if diameters are equal.
[3] Single magnet wire only.
[4] Varnish resist coating.
[5] After insertion into plastic cavity, tab portion must be bent over 45°-90° or potted in to prevent pullout when mating receptacle is disconnected.
* Recognized under the Component Program of Underwriters Laboratories, Inc.

For complete product information, order Catalog 82221

Products for Industrial & Commercial Applications

Dimensions are shown for reference purposes only.

Dimensions are in inches and millimeters unless otherwise specified. Values in brackets are metric equivalents.

Specifications subject to change.

Technical Support Center
1-800-522-6752
www.tycoelectronics.com

250 Series FASTON Tab Terminals

Material:

Tin plated brass

Type A—Use Cavity Size 2

Type B—Use Cavity Size 3

Type C—Use Cavity Size 5

Note: .250 [6.35] tab terminals mate with compatible FASTON receptacles. Request AMP Catalog 82004.

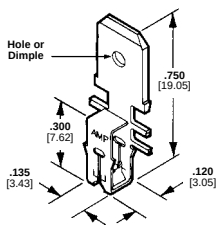

A[5]
.300 [7.62] Box

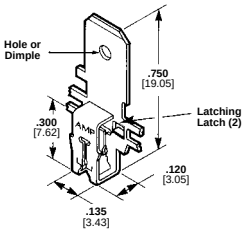

B[6]
.300 [7.62] Box
Latch Type, Wide Body

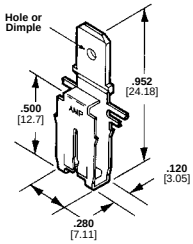

D[7]
.500 [12.7] Box

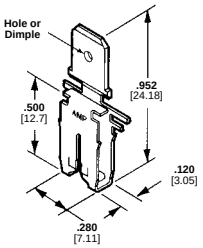

E[5]
.500 [12.7] Box

Type	Copper Magnet Wire Range		Tab Feature	Tab Size	Stock Thickness		Part Numbers[1]
	AWG	mm			Tab Section	Mag. Wire Section	
A	27–23[2]	0.36–0.57	Dimple	**.032 × .250** 0.81 × 6.35	**.032** 0.81	**.016** 0.41	62652-1*
B	27–23[2]	0.36–0.57	Hole	**.032 × .250** 0.81 × 6.35	**.032** 0.81	**.016** 0.41	63571-1
D	16–15[2]	1.29–1.45	Hole	**.032 × .250** 0.81 × 6.35	**.032** 0.81	**.020** 0.51	63459-3[4]
	14–13[3]	1.61–1.83	Hole	**.032 × .250** 0.81 × 6.35	**.032** 0.81	**.020** 0.51	63816-2[4] 63816-1
E	19–17[2]	0.91–1.15	Dimple	**.032 × .250** 0.81 × 6.35	**.032** 0.81	**.020** 0.51	62923-1[4]

[1] Strip product part numbers shown. See page 7143 for loose piece part number cross reference and tooling.
[2] Two magnet wires may be terminated in the same terminal slot if diameters are equal.
[3] Single magnet wire only.
[4] Varnish resist coating.
[5] After insertion into plastic holder, tab portion must be bent over 45°-90° or potted in to prevent pullout when mating receptacle is disconnected.
[6] Special transition.
[7] After insertion into plastic cavity, tab portion **can not** be bent over. The body is potted in only.
* Recognized under the Component Program of Underwriters Laboratories, Inc.

For complete product information, order Catalog 82221

Products for Industrial & Commercial Applications
Dimensions are shown for reference purposes only.
Dimensions are in inches and millimeters unless otherwise specified. Values in brackets are metric equivalents.
Specifications subject to change.
Technical Support Center
1-800-522-6752
www.tycoelectronics.com

Slim Line 187 Series FASTON Terminals

Material:
Tin over premilled brass

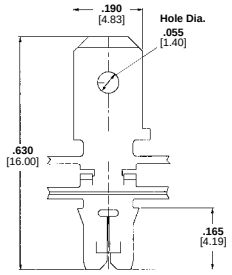

Copper Magnet Wire Range		Tab Size	Stock Thickness		Part Numbers
			Tab	Mag Wire	
AWG	mm		Section	Section	
33–31	0.18–0.23	**.020 x .187** 0.51 x 4.75	**.020** 0.51	**.013** 0.33	63710-1
30–28	0.25–0.32	**.020 x .187** 0.51 x 4.75	**.020** 0.51	**.013** 0.33	63711-1
23–20	0.57–0.81	**.020 x .187** 0.51 x 4.75	**.020** 0.51	**.013** 0.33	63713-2

Slim Line 250 Series FASTON Terminals

Material:
Tin over premilled brass

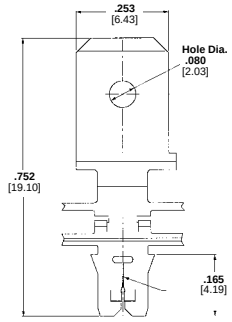

Copper Magnet Wire Range		Tab Size	Stock Thickness		Part Number
			Tab	Mag Wire	
AWG	mm		Section	Section	
33–31	0.18–0.23	**.032 x .250** 0.81 x 6.35	**.032** 0.81	**.013** 0.33	63744-2

For complete product information, order Catalog 82221

Products for Industrial & Commercial Applications
Dimensions are shown for reference purposes only.
Dimensions are in inches and millimeters unless otherwise specified. Values in brackets are metric equivalents.
Specifications subject to change.
Technical Support Center
1-800-522-6752
www.tycoelectronics.com

AMPLIVAR Product Terminator (APT)

Machine Ordering Information

A "Base Part Number" is selected from the Basic Machine Part Numbers table. Then, a dash number or numbers are selected from one of the other two tables depending on the type of product to be applied.

For example, the correct ordering number appears as 2-679452-4.

Basic Machine Part Numbers

Machine Features				Base Part Number*	
Precision Adjust	Crimp Quality Monitor	Programmable Crimp-Height Sequencing	Model	Pigtail-Type Splice	Direct Connect Contact
Manual	Not Included	Not Included	APT II	□-679450-□	□-679454-□
Manual	Included	Not Included	APT II/CQM	□-679451-□	□-679455-□
Automatic	Included	Not Included	APT IIA	□-679452-□	□-679456-□
Automatic	Included	Included	APT IIIA	□-679453-□	□-679457-□

*See tables below for suffix and prefix dash numbers which indicate product to be applied, voltage requirement and wire stuffer option.
Note: Kits are available to upgrade the basic machines listed above.

Pigtail-Type Splice (AMPLIVAR) Suffix and Prefix Dash Numbers

Crimp Width	120 VAC Machine	120 VAC Machine with Wire Stuffer	120 VAC Machine	240 VAC Machine with Wire Stuffer	Pigtail-Type Splice Base Number**
.250 6.35	( )-1	1-( )-4	2-( )-7	4-( )-0	62295
.220 5.59	( )-2	1-( )-5	2-( )-8	4-( )-1	62310
.180 4.57	( )-3	1-( )-6	2-( )-9	4-( )-2	62002
.180 4.57	( )-4	1-( )-7	3-( )-0	4-( )-3	62310
.180 4.57	( )-5	1-( )-8	3-( )-1	4-( )-4	62309
.180 4.57	( )-6	1-( )-9	3-( )-2	4-( )-5	62001
.140 3.56	( )-7	2-( )-0	3-( )-3	4-( )-6	62201
.140 3.56	( )-8	2-( )-1	3-( )-4	4-( )-7	42779 62001
.140 3.56	( )-9	2-( )-2	3-( )-5	4-( )-8	62308
.140 3.56	1-( )-0	2-( )-3	3-( )-6	4-( )-9	62306
.110 2.79	1-( )-1	2-( )-4	3-( )-7	5-( )-0	42775 42776 62040 62306 62307
.110 2.79	1-( )-2	2-( )-5	3-( )-8	5-( )-1	42777 42778 62000 62157 62200 62304 62305
.080 2.03	1-( )-3	2-( )-6	3-( )-9	5-( )-2	62303

Loose Piece Parts Cross Reference

Part Numbers		
Strip	Loose Piece	Hand Tool
62420-1	62524-1	274250-2
62429-1	62526-1	274250-2
62431-1	62527-1	274250-2
62513-1	62663-1	274260-2
62652-1	62657-1	274282-1
62653-1	62658-1	274282-1
62935-1	63044-1	274250-2
63064-1	63263-1	274282-1
63155-1	63336-1	274282-1
63464-3	63598-1	274278-1

Direct Connect Contact (AMPLIVAR) Suffix and Prefix Dash Numbers

120 VAC Machine	240 VAC Machine	Direct Connect Contact Base Number**
( )-1	( )-6	63455
( )-2	( )-7	63454
( )-3	( )-8	63453
( )-4	( )-9	63549
( )-5	1-( )-0	63548

**See Catalog 82221 for product specifications.

For complete product information, order Catalog 82221

Products for Industrial & Commercial Applications

Dimensions are shown for reference purposes only.

Dimensions are in inches and millimeters unless otherwise specified. Values in brackets are metric equivalents.

Specifications subject to change.

Technical Support Center
1-800-522-6752
www.tycoelectronics.com

Tooling

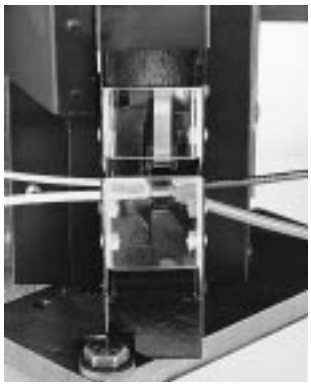

Standard Style Applicator for Large CMA Splice, Part Number 566372-1

This applicator was designed specifically to apply AMP 5 000-16 000 CMA Splice, Part Number 63625-1. It features a highly-visible, close-up crimp area—less than 1 [25] from the front of the guard. You can easily splice multiple wires by simply rotating them down through the front of the guard into the crimp area.

It is an air-feed applicator, and can be used with Model "K" Part Number 1-471273-2 or 1-471273-3.

Technical Information

Circular Mil Area (CMA) and Diameter for Magnet Wires (AWG Wire Size Range 52–25 1/2)

AWG Bare Wire	Bare Wire Dia.		CMA Bare	Single Film Coated Dia.		CMA Single Film Coated	Heavy Film Coated Dia.		CMA Heavy Film Coated
	in.	mm		in.	mm		in.	mm	
52	.0008	.020	0.6	.0010	.025	1.0	.0011	.028	1.2
51	.0009	.023	0.8	.0011	.028	1.2	.0012	.031	1.5
50	.0010	.025	1.0	.0012	.031	1.5	.0013	.033	1.7
49	.0011	.028	1.2	.0013	.033	1.7	.0014	.035	2.0
48	.0012	.031	1.5	.0014	.035	2.0	.0015	.038	2.2
47	.0014	.035	2.0	.0016	.040	2.5	.0018	.045	3.1
46	.0016	.040	2.5	.0017	.043	2.9	.0019	.048	3.6
45	.0018	.045	3.1	.0019	.048	3.6	.0021	.053	4.4
44	.0020	.050	4.0	.0022	.056	4.8	.0025	.063	6.2
43	.0022	.056	4.8	.0025	.063	6.2	.0027	.069	7.3
42	.0025	0.06	6.3	.0028	0.07	8	.0030	0.08	9
41	.0028	0.07	7.8	.0031	0.08	10	.0034	0.09	12
40	.0031	0.08	9.6	.0035	0.09	12	.0038	0.10	14
39	.0035	0.09	12	.0039	0.10	15	.0043	0.11	18
38	.0040	0.10	16	.0045	0.11	20	.0049	0.12	24
37	.0045	0.11	20	.0050	0.13	25	.0055	0.14	30
36	.0050	0.13	25	.0056	0.14	31	.0060	0.15	36
35	.0056	0.14	31	.0062	0.16	38	.0067	0.17	45
35	.0056	0.14	31	.0062	0.16	38	.0067	0.17	45
34	.0063	0.16	40	.0069	0.18	48	.0075	0.19	56
33	.0071	0.18	50	.0077	0.20	59	.0085	0.22	72
32	.0080	0.20	64	.0084	0.21	71	.0095	0.24	90
31	.0089	0.23	79	.0092	0.23	85	.0105	0.27	110
30 1/2	.0095	0.24	90	.0099	0.25	98	.0111	0.28	123
30	.0100	0.25	100	.0106	0.27	112	.0116	0.29	135
29 1/2	.0107	0.27	115	.0114	0.29	130	.0123	0.31	151
29	.0113	0.29	128	.0120	0.30	144	.0130	0.33	169
28 1/2	.0120	0.30	144	.0126	0.32	159	.0137	0.35	187
28	.0126	0.32	159	.0136	0.35	185	.0144	0.37	207
27 1/2	.0134	0.34	180	.0144	0.37	207	.0153	0.39	234
27	.0142	0.36	202	.0152	0.39	231	.0161	0.41	259
26 1/2	.0151	0.38	225	.0160	0.41	256	.0170	0.43	289
26	.0159	0.40	258	.0170	0.43	289	.0179	0.45	320
25 1/2	.0169	0.43	289	.0180	0.46	324	.0190	0.48	361

For complete product information, order Catalog 82221

Products for Industrial & Commercial Applications

Dimensions are shown for reference purposes only.

Dimensions are in inches and millimeters unless otherwise specified. Values in brackets are metric equivalents.

Specifications subject to change.

Technical Support Center
1-800-522-6752
www.tycoelectronics.com

Technical Information

Circular Mil Area (CMA) and Diameter for Magnet Wires (AWG Wire Size Range 25–8)

AWG Bare Wire	Bare Wire Dia.		CMA Bare	Single Film Coated Dia.		CMA Single Film Coated	Heavy Film Coated Dia.		CMA Heavy Film Coated
	in.	mm		in.	mm		in.	mm	
25	.0179	0.45	320	.0190	0.48	361	.0200	0.51	400
24 1/2	.0190	0.48	361	.0200	0.51	400	.0212	0.54	449
24	.0201	0.51	404	.0213	0.54	455	.0223	0.57	497
23 1/2	.0214	0.54	458	.0226	0.57	511	.0236	0.60	557
23	.0226	0.57	511	.0238	0.60	566	.0249	0.63	620
22 1/2	.0240	0.61	576	.0252	0.64	635	.0263	0.67	692
22	.0253	0.64	640	.0266	0.68	708	.0277	0.70	767
21 1/2	.0269	0.68	724	.0282	0.72	795	.0293	0.74	858
21	.0285	0.72	812	.0298	0.76	888	.0310	0.79	961
20 1/2	.0303	0.77	918	.0315	0.80	992	.0328	0.83	1,076
20	.0320	0.81	1,024	.0334	0.85	1,116	.0346	0.88	1,197
19 1/2	.0340	0.86	1,156	.0353	0.90	1,246	.0365	0.93	1,340
19	.0359	0.91	1,289	.0373	0.95	1,391	.0386	0.98	1,490
18 1/2	.0381	0.97	1,452	.0395	1.00	1,560	.0409	1.04	1,673
18	.0403	1.02	1,624	.0418	1.06	1,747	.0431	1.09	1,858
17 1/2	.0428	1.09	1,832	.0443	1.13	1,962	.0456	1.16	2,079
17	.0453	1.15	2,052	.0468	1.19	2,190	.0482	1.22	2,323
16 1/2	.0481	1.22	2,314	.0496	1.26	2,460	.0510	1.30	2,601
16	.0508	1.29	2,581	.0524	1.33	2,746	.0583	1.37	2,894
15 1/2	.0540	1.37	2,916	.0560	1.42	3,136	.0570	1.45	3,249
15	.0571	1.45	3,260	.0587	1.49	3,446	.0602	1.53	3,624
14 1/2	.0606	1.54	3,672	.0622	1.58	3,869	.0639	1.62	4,082
14	.0641	1.63	4,109	.0658	1.67	4,330	.0675	1.71	4,556
13 1/2	.0681	1.73	4,638	.0698	1.77	4,872	.0711	1.81	5,055
13	.0720	1.83	5,184	.0738	1.87	5,446	.0749	1.90	5,670
12 1/2	.0764	1.94	5,837	.0783	1.99	6,131	.0793	2.01	6,188
12	.0808	2.05	6,529	.0827	2.10	6,839	.0838	2.13	7,090
11 1/2	.0858	2.18	7,362	.0877	2.23	7,691	.0888	2.26	7,885
11	.0907	2.30	8,226	.0927	2.35	8,593	.0938	2.38	8,892
10 1/2	.0963	2.35	9,274	.0983	2.50	9,663	.0994	2.52	9,880
10	.1019	2.59	10,384	.1040	2.64	10,820	.1050	2.67	11,151
9	.1144	2.91	13,087	.1166	2.96	13,600	.1177	2.99	13,971
8	.1285	3.26	16,512	.1307	3.32	17,080	.1318	3.35	17,530

Technical Information

Circular Mil Area (CMA) and Diameter for Lead Wires (AWG Wire Size Range 30–8)

Wire Size	Strands		Wire Area in Circ. Mils
	Numbers	Dia. (Mils)	
30	7	4.0	112
30	1	10.0	100
28	7	5.0	175
28	19	3.1	181
28	1	12.6	159
27	7	5.6	219
27	1	14.2	202
26	6	6.3	238
26	10	5.0	250
26	16	4.0	256
26	8	5.6	251
26	1	15.9	253
26	26	3.1	250
26	7	6.3	278
26	3	10.0	300
26 AN	12	5.0	300
25	10	5.6	314
25	8	6.3	318
25	1	17.9	320
24	10	6.3	397
24	8	7.1	403
24	16	5.0	400
24	4	10.0	400
24	1	20.1	404
24	26	4.0	416
24	13	5.6	408
24	7	8.0	448
24	56	2.8	439
24 AN	19	5.0	475
23	10	7.1	504
23	8	8.0	512
23	1	22.6	511
—	21	5.0	525
22	6	10.0	600
22	8	8.9	634
22	16	6.3	635
22	10	8.0	640
22	1	25.3	640
22	7	10.0	700
22 AN	19	6.3	754
20	10	10.0	1,000
20	1	10.0	1,024
20	26	6.3	1,032
20	7	12.6	1,111
20 AN	19	7.9	1,186
18	19	9.2	1,608
—	16	10.0	1,600
18	1	40.3	1,624
18	7	15.2	1,617
18	65	5.0	1,625
18	7	15.3	1,639
—	41	6.3	1,627
—	7	16.0	1,792
18 AN	19	10.0	1,900
18 AN	19	11.3	2,426
16	7	19.2	2,580
16	1	50.8	2,581
16	65	6.3	2,580
16	19	11.7	2,601
16	105	5.0	2,625
—	26	10.0	2,600
16	7	20.0	2,800
14 AN	19	14.2	3,831
14	37	10.5	4,079
14	7	24.2	4,099
14	19	14.7	4,106
14	1	64.4	4,109
—	41	10.0	4,100
14	105	6.3	4,167
14	168	5.0	4,200
14	84	71	4,234
—	7	25.3	4,481
12	19	17.9	6,088
12 AN	19	17.9	6,088
12	259	5.0	6,475
12	19	18.5	6,503
12	7	30.5	6,512
12	37	13.3	6,545
12	1	80.8	6,529
12	165	6.3	6,549
12	84	8.9	6,654
10	7	36.0	9,072
—	37	16.0	9,472
10	414	5.0	10,350
10	37	16.7	10,319
10	1	101.9	10,384
10	7	38.5	10,376
10	19	23.4	10,404
—	41	15.9	10,365
10	105	10.0	10,500
9	7	43.0	12,943
9	1	114.4	13,087
9	525	5.0	13,125
8	7	45.0	14,175
8	133	11.1	16,386
8	37	21.1	16,472
8	1	128.5	16,512
8	7	48.6	16,533
8	19	29.5	16,534
8	49	18.4	16,589
8 AN	133	11.3	16,982

Technical Documents

A variety of technical documents are available for your use:

Product Specifications describe technical performance characteristics and verification tests. They are intended for the Design, Component and Quality Engineer.

108-2012—Standard MAG-MATE Splices and Terminals
108-2016—Mini MAG-MATE Terminals

Application Specifications describe requirements for using the product in its intended application and or crimping information. They are intended for the Packaging and Design Engineer and the Machine Setup Person.

114-2002—AMPLIVAR 7-Serration Pigtail Splices
114-2003—AMPLIVAR 9-Serration Pigtail Splices
114-2005—AMPLIVAR Subminiature Thru Splices
114-2006—AMPLIVAR Subminiature Pigtail Splices
114-2009—AMPLIVAR 5-Serration Thru Splices
114-2016—AMPLIVAR Miniature Pigtail Splices
114-2050—Poke-In Tab MAG-MATE Terminals
114-2069—Standard MAG-MATE .187 [4.75] Box Height Terminals
114-2046—Standard MAG-MATE .300 [7.62] Box Height Terminals
114-2066—Standard MAG-MATE .500 [12.7] Box Height Terminals
114-2067—Standard MAG-MATE .300 [7.62] Box Height Latch-In Terminals Narrow Body
114-2094—Standard MAG-MATE .300 [7.62] Box Height Latch-In Terminals Wide Body
114-2047—Mini MAG-MATE Terminals

Terminals and Splices for Aluminum and Copper Foil or Strip (TERMI-FOIL)

Catalog 1307612
Revised 7-01

Product Facts

- **Accommodates aluminum foil or strip thickness from .001 to .095 [0.03 to 2.41] and soft copper to .010 [.025]**
- **Exceeds current-carrying requirements**
- **For use in air or oil filled transformers, capacitors, reactors, solenoids, relays, regulators, etc.**
- **No surface preparation necessary**
- **No noise injection in low-level audio circuits**
- **Available in copper, brass and steel base metal — tin plated, nickel plated or plain**
- **Will terminate or tap aluminum foil-wound coils**
- **Will splice two or more pieces of foil or strip**
- **Apply to bare, insulated, anodized or coated aluminum and bare or insulated copper**
- **Can be applied in heating elements, alarm systems and electrostatic shields**
- **Low applied cost**
- **Tin plated items acceptable for use in 150°C; nickel plated items to 343°C**

Technical Documents:

Instruction Sheets
408-2517, 408-2689, 408-2758 — Terminals
408-1710, 408-2357, 408-2363, 408-2014, 408-2284, 408-1412, 408-1546, 408-2395 — Tooling

Engineering Test Reports
110-13500, 110-13501

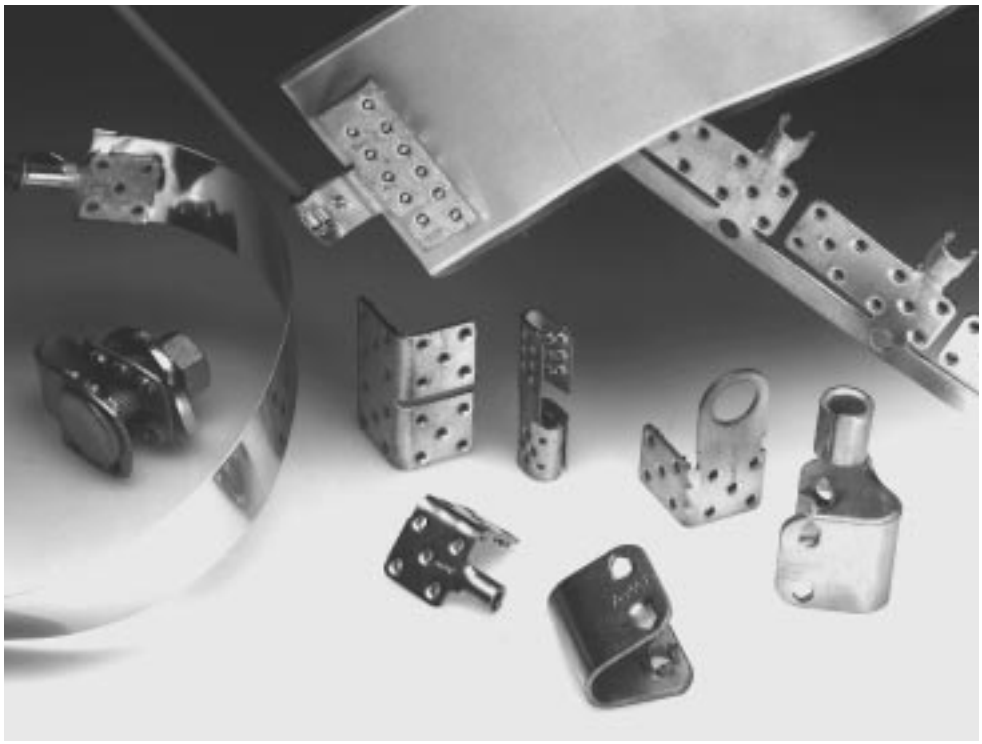

TERMI-FOIL terminals and splices make it possible for the transformer manufacturer to use aluminum foil or strip instead of copper wire windings. These terminations feature a calculated number of precision spaced lances which penetrate surface oxides and insulation, then imbed themselves in the foil or strip when the two faces are clamped together. This results in an airtight and moisture-proof connection, with no need for surface preparation or time-consuming termination equipment.

Terminations are reliable, light, economical and quickly accomplished. They dissipate heat efficiently and are mechanically strong. Tests in air and under oil show entirely satisfactory performance, in both elevated and subzero temperatures, during current cycling and overload conditions.

TERMI-FOIL terminals are available in two types: wire to foil styles (for AWG wire Sizes 22 to 8 [0.3 to 8 mm^2] and larger tap types (in lengths up to 15 in. [381 mm]) with provisions for lead terminations. Selection of the proper TERMI-FOIL terminal or splice depends on several factors:

(1) The terminal must have the same current-carrying capacity as the aluminum foil or strip (i.e., the CMA of the TERMI-FOIL terminal or splice must be equivalent to the CMA of the aluminum foil or strip). Use the nomograph on page 8 or the following formula when selecting TERMI-FOIL terminals and splices. T x W x 1.273 x .62 = equivalent CMA of the TERMI-FOIL terminal or splice. T = thickness of aluminum strip or foil in mils. W = width of aluminum strip or foil in mils.

(2) The lanced area of the TERMI-FOIL terminal must cover a minimum of 60% of the width of the aluminum strip or foil to insure proper current distribution in the strip or foil.

(3) For TERMI-FOIL terminals with wire barrels, the current-carrying capacity of the wire used in conjunction with the terminal can be considered as the current-carrying capability of the connection.

For complete product information, order Catalog 82039

Products for Industrial & Commercial Applications

Dimensions are shown for reference purposes only.

Dimensions are in inches and millimeters unless otherwise specified. Values in brackets are metric equivalents.

Specifications subject to change.

Technical Support Center
1-800-522-6752
www.tycoelectronics.com

Barrel Terminals

.030 [0.76] Max. Aluminum Foil Thickness

Related Product Data:

Application Tooling — page 7153

Technical Documents:
page 7150

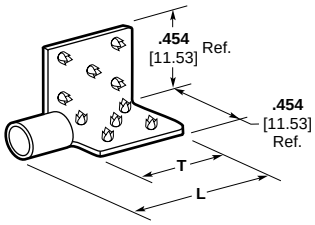

Type 1
Double Face

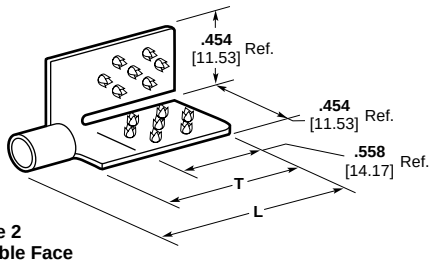

Type 2
Double Face
(Slotted)

Material and Finish	Type	Wire Barrel Range AWG	Wire Barrel Range mm²	Dimensions T	Dimensions L Max.	Terminal Part Numbers	Foil Crimp Tooling Hand Tool	Foil Crimp Tooling Dies for Pneu. Tool 189721-1[1] with Head 189722-1
Nickel Plated Copper	1	16 – 14	1.25 – 2.0	**.408** 10.36	**.671** 17.04	329860	68026	217923-1[2] & 69177-1
	1	12 – 10	3.0 – 6.0	**.408** 10.36	**.781** 19.84	329254		
	2	16 – 14	1.25 – 2.0	**.708** 17.98	**.989** 27.13	52195		
Tin-Plated Copper	1	16 – 14	1.25 – 2.0	**.408** 10.36	**.671** 17.04	329860-1	68026*	217923-1[2] & 69177-1
	1	12 – 10	3.0 – 6.0	**.408** 10.36	**.781** 19.84	2-329254-4		
	1	12 – 10	3.0 – 6.0	**.932** 23.67	**1.296** 32.97	330003		

**Oblong wire barrel.
[1] Pneu. tool 189721-1 is hand actuated, 189722-1 is foot actuated.
[2] Requires tool holder 189767-1 (non-logic) or 356302-1 (logic)

Wire Barrel Crimp Tooling

Wire Range AWG	Wire Range mm²	Hand Tool	Dies for Pneu. Tool 189721-1	Dies for Pneu. Tool 189722-1[1]
16 – 14 & 12 – 10	1.25 – 2.0 & 3.0 – 6.0	49935	679301-1[2]	
8	7.0 – 8.0	69355	679302-1[2]	

Note: This is only a partial listing of tools that are available for crimping wire barrels. For additional tooling information call the Technical Support Center **1-800-522-6752.**

Tap Splice and Barrel Terminal

Power Factor Capacitor .095 [2.41] Aluminum Foil Thickness

Related Product Data:

Application Tooling — page 7153

Technical Documents:
page 7150

Type 11
Terminal

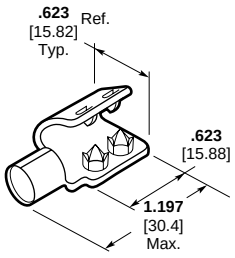

Material and Finish	Type	Wire Barrel Range AWG	Wire Barrel Range mm²	Part Number	Foil Crimp Tooling Jaws for Tool 68068, 68068-3	Wire Barrel Crimp Tooling Jaws for Tool 68068, 68068-3	Wire Barrel Crimp Tooling Head for Pneu. Tool 69010
Brass, tin-plated	11	8	7.0 – 8.0	53660-4	68257-1	68135	38394

For complete product information, order Catalog 82039

Products for Industrial & Commercial Applications

Dimensions are shown for reference purposes only.

Dimensions are in inches and millimeters unless otherwise specified. Values in brackets are metric equivalents.

Specifications subject to change.

Technical Support Center
1-800-522-6752
www.tycoelectronics.com

Splices

.030 [0.76] Max. Aluminum Foil Thickness

Related Product Data:

Application Tooling — page 7153

Technical Documents:
page 7150

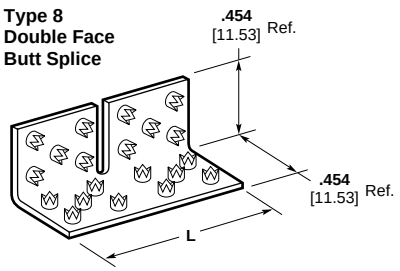

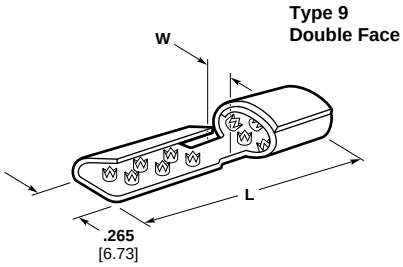

Wire Range	Material and Finish	Type	Dimensions W	Dimensions L	Part Numbers	Foil Crimp Tooling: Hand Tool	Foil Crimp Tooling: Dies for Pneu. Tool 69010 with 69263-1
Carrying Capacity Equal to 10 AWG [5-6 mm²]	Tin Plated Copper	8	—	**.932** 23.67	329657	68026*	69177-1
		9	**.170** 4.32	**1.012** 25.7	1-332006-0		

*For heavy duty, use tool **68064**.

Shield Connector for Telephone and Power Cable

Material and Finish:

Brass, tin-plated

Related Product Data:

Application Tooling — page 7153

Technical Documents:
page 7150

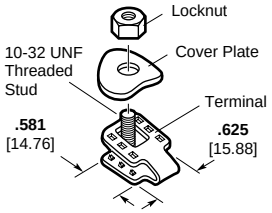

Part No. 53490-1

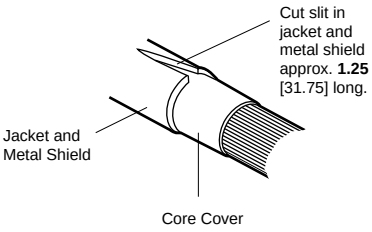

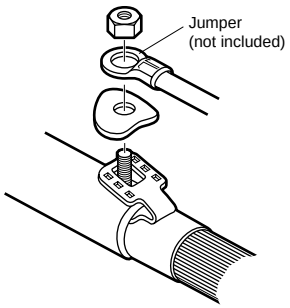

For complete product information, order Catalog 82039

Products for Industrial & Commercial Applications

Dimensions are shown for reference purposes only.

Dimensions are in inches and millimeters unless otherwise specified. Values in brackets are metric equivalents.

Specifications subject to change.

Technical Support Center
1-800-522-6752
www.tycoelectronics.com

Application Tooling

Hand Tools



Tool 68026

626 Pneumatic Tool



AMP-O-LECTRIC

Machine No. 1-471273-3



DYNA-CRIMP Electric Hydraulic Power Unit



Part Numbers:
Power Unit Only (includes pressure release on unit)
115 Volts 60 Hz — 69120-1
230 Volts 60 Hz — 69120-2

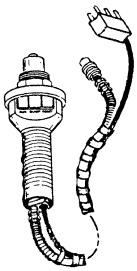

Handle Control

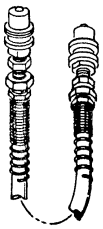

Hose Assembly

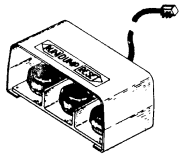

Foot Control

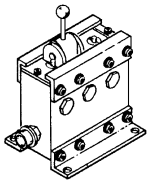

Multidirectional Valve

Accessory Power Controls and Hoses

Controls and hose accessories must be ordered separately.

If electric hydraulic tool is to be used in portable appli-cations, a handle control and hose assembly should be used.

For stationary applications, a foot switch assembly and hose assembly and hose assembly will be necessary.

Multidirectional valves are used when more than one crimping head is permanently attached to the tool.

For use with Power Unit No.	Accessory Description	Accessory Part Numbers	Remarks
69120-1 69120-2	7 ft. [2.13 m] Handle Control Assembly — Hose and Cord	59907-7	
	15 ft. [4.57 m] Handle Control Assembly — Hose and Cord	1-59907-5	
	15 ft. [4.57 m] Handle Control Assembly — Cord (Less Hose)	1-59908-5	
	21 ft. [6.4 m] Handle Control Assembly — Hose and Cord	2-59907-1	
	21 ft. [6.4 m] Handle Control Assembly — Cord (Less Hose)	2-59908-1	
	28 ft. [8.53 m] Handle Control Assembly — Hose and Cord	2-59907-8	
	15 ft. [4.57 m] Foot Switch Assembly	68284-1	Needs Hose Assembly
	3 ft. [0.91 m] Hose Assembly	59909-3	68284-1 Foot Switch Assembly needed with these Hose Assemblies
	7 ft. [2.13 m] Hose Assembly	59909-7	
	15 ft. [4.57 m] Hose Assembly	1-59909-5	
	21 ft. [6.4 m] Hose Assembly	2-59909-1	
69120-1 69120-2	3-Way Multi-Directional Valve	59220	For use with Foot Switch only
	3-Way Multi-Directional Valve (Elec. Control)	59220-2	

For complete product information, order Catalog 82039

Products for Industrial & Commercial Applications

Dimensions are shown for reference purposes only.

Dimensions are in inches and millimeters unless otherwise specified. Values in brackets are metric equivalents.

Specifications subject to change.

Technical Support Center
1-800-522-6752
www.tycoelectronics.com

Product Facts

Bar Crimp Technique

- Terminals and Splices for aluminum-to-aluminum and aluminum-to-copper stripped wire applications
- Terminates stripped, stranded and solid (round or rectangular) aluminum and copper conductors — individually or in combination
- Eliminates messy inhibitors
- Available for a broad range of wire sizes — from 16 AWG to 500 MCM [1.25 to 253 mm²]
- Low cost, reliable terminations provide stable electrical and mechanical performance
- UL 486B Listed where indicated [1]

[1] Bar crimp only

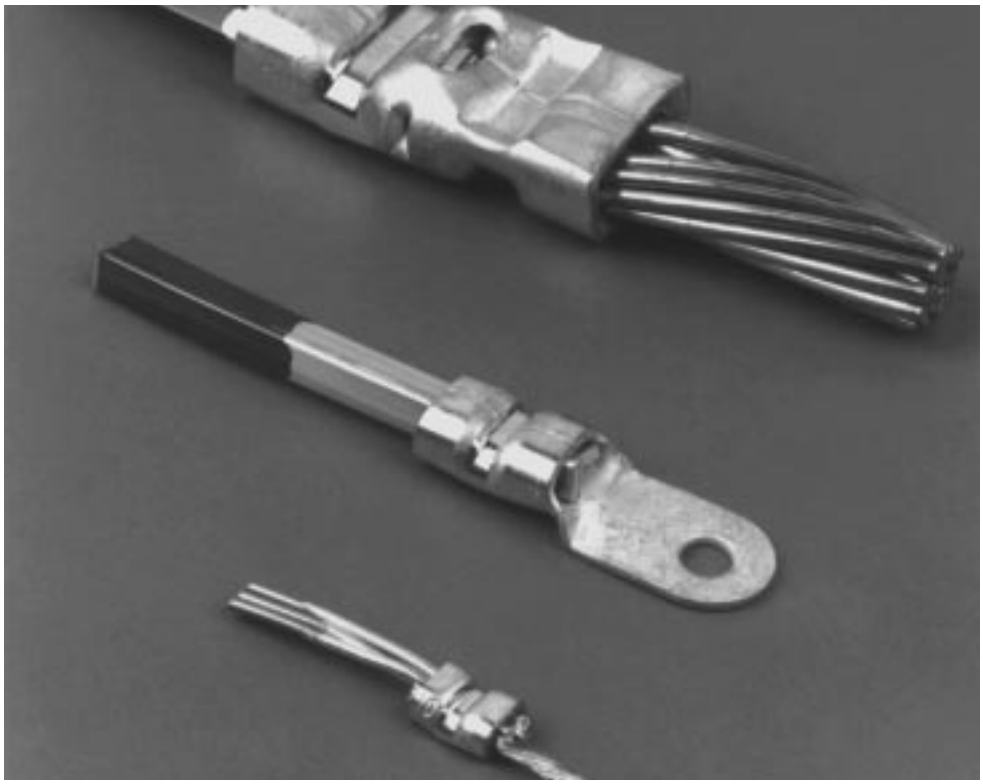

Insulation Piercing Technique

- Terminals and splices for aluminum-to-aluminum, copper-to-copper and aluminum-to-copper wire applications
- Terminates film insulated solid aluminum, film insulated solid copper, or un-insulated stranded copper conductors — individually or in combination
- Stripping of film insulated solid conductors not required
- Eliminates messy inhibitors
- Available for a broad range of wire sizes — from 16 to 4/0 AWG [1.25 to 105 mm²]
- Copper body construction
- Low cost, reliable terminations provide stable electrical and mechanical performance



For complete product information, order Catalog 82020

Products for Industrial & Commercial Applications

Dimensions are shown for reference purposes only.

Dimensions are in inches and millimeters unless otherwise specified. Values in brackets are metric equivalents.

Specifications subject to change.

Technical Support Center
1-800-522-6752
www.tycoelectronics.com

Ring Tongue Terminals

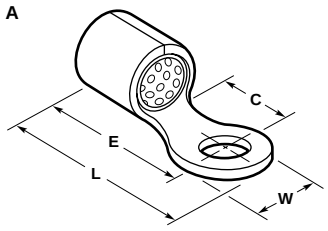

Style	Wire Size [mm²] Circular Mils Aluminum	Tongue Thickness Max.	Stud Size	Dimensions W	L Max.	E Max.	C Min.	Part Numbers Hand Tool*	Heads for Pneumatic Tools* 69010	68068	Terminal
A	12-10 [5.0] 5180-13100	**.042** 1.07	**1/4** M6	**.375** 9.53	**.835** 21.21	**.645** 16.38	**.302** 7.67	68042 68141-1	68030 68080	68105 68100, 68101	51979-3

*First (top) part numbers denote bar crimp tooling. Second (bottom) part numbers denote insulation piercing crimp tooling.

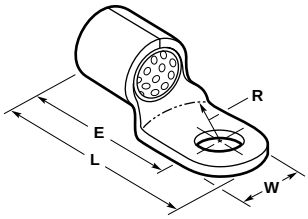

Wire Size [mm²] Circular Mils Aluminum	Tongue Thickness Max.	Stud Size	Dimensions W	L Max.	E Max.	R Max.	Part Numbers Heads for Pneumatic Tools* 69015	68068	Heads & Die Inserts for Power Unit 69120* Head	Die Insert	Terminal
8 [8.0] 13100-20800	**.048** 1.22	**10** —	**.500** 12.7	**1.384** 35.15	**1.131** 28.73	**.560** 14.22	68032 68081	68105 68101,68192-1	69099 69099	68043 68084	50720
		1/4 M6	**.500** 12.7	**1.384** 35.15	**1.131** 28.73	**.560** 14.22	68032 68081	68105 68101,68192-1	69099 69099	68043 68084	50720-1
6 [14] 20800-33100	**.051** 1.3	**10** —	**.500** 12.7	**1.415** 35.94	**1.162** 29.51	**.580** 14.73	69999 68082	68106 68102	69099 69099	68044 68085	50719
		1/4 M6	**.500** 12.7	**1.415** 35.94	**1.162** 29.51	**.580** 14.73	69999 68082	68106 68102	69099 69099	68044 68085	50719-1
2 [35] 52600-83700	**.060** 1.52	**1/4** M6	**.675** 17.15	**1.859** 47.22	**1.541** 39.14	**.625** 15.88	—	—	69099 69099	68046 68130	51982
1/0 [50] 83700-119500	**.073** 1.85	**1/4** M6	**.675** 17.15	**1.859** 47.22	**1.541** 39.14	**.625** 15.88	—	—	69099 69099	68047 68131	51986
		5/16 M8	**.675** 17.15	**1.859** 47.22	**1.541** 39.14	**.625** 15.88	—	—	69099 69099	68047 68131	51986-1

*First (top) part numbers denote bar crimp tooling. Second (bottom) part numbers denote insulation piercing crimp tooling.

For complete product information, order Catalog 82020

Products for Industrial & Commercial Applications
Dimensions are shown for reference purposes only.
Dimensions are in inches and millimeters unless otherwise specified. Values in brackets are metric equivalents.
Specifications subject to change.
Technical Support Center 1-800-522-6752 www.tycoelectronics.com

Splices

Butt Splice

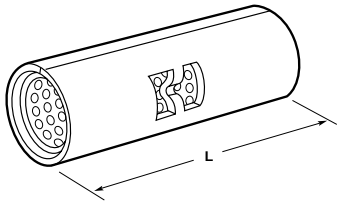

Wire Size [mm²] Circular Mils		Dim. L Max.	Part Numbers				Splice
			Heads for Pneumatic Tools*		Tooling for Power Unit 69120*		
Aluminum	Copper		69015	68068	Head	Die Insert*	
8 [8.0] 13100-20800	12-10 [5.0] 5180-13100	**1.195** 30.35	68032 68081	68105 68101,68192-1	69099	68043 68084	51826
6 [14] 20800-33100	8 [8.0] 13100-20800	**1.340** 34.04	69999 68082	68106 68102	69099	68044 68085	51941
4 [21] 33100-52600	6 [14] 20800-33100	**1.630** 41.4	68038	—	69099	68045 68086	51942
2 [35] 52600-83700	4 [21] 33100-52600	**1.995** 50.67	—	—	69099	68046 68130	52007
2/0 [70] 119500-150500	1/0 [50] 83700-119500	**1.985** 50.42	—	—	69099	68048 68132	52013

*First (top) part numbers denote crimp bar tooling. Second (bottom) part numbers denote insulation piercing crimp tooling.

Parallel Splice

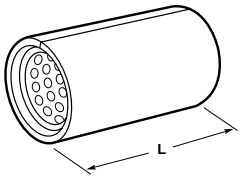

Wire Size [mm²] Circular Mils		Dim. L Max.	Part Numbers						Splice
			Hand Tool*	Heads for Pneumatic Tools*			Tooling for Power Unit 69120*		
Aluminum	Copper			69015	69010	68068	Head	Die Insert	
16-14 [1.25] 2050-5180	18-16 [0.8] 1290-3260	**.283** 7.19	68041 68140-1	—	68031 68093-1	68104 68100	—	—	52791
12-10 [5.0] 5180-13100	14-12 [3.0] 3260-8230	**.375** 9.53	68042 68141-1	—	68030 68080	68104,68105 68100,68101	—	—	52792
8 [8.0] 13100-20800	12-10 [5.0] 5180-13100	**.437** 11.1	—	68032 68081	—	68105 68101,68192-1	69099	68043 68084	52745
6 [14] 20800-33100	8 [8.0] 13100-20800	**.450** 11.43	—	69999 68082	—	68106 68102	69099	68044 68085	52746
4 [21] 33100-52600	6 [14] 20800-33100	**.562** 14.27	—	68038	—	—	69099	68045 68086	52747
2 [35] 52600-83700	4 [21] 33100-52600	**.781** 19.84	—	—	—	—	69099	68046 68130	52748
1/0 [50] 83700-119500	2 [35] 52600-83700	**.734** 18.64	—	—	—	—	69099	68047 68131	52749
2/0 [70] 11950-150500	1/0 [50] 83700-119500	**.734** 18.64	—	—	—	—	69099	68048 68132	52750
3/0 [85] 150500-190000	2/0 [70] 119500-150500	**.749** 19.02	—	—	—	—	69099	68049 68133	52751

*First (top) part numbers denote bar crimp tooling. Second (bottom) part numbers denote insulation piercing crimp tooling.

For complete product information, order Catalog 82020

Products for Industrial & Commercial Applications
Dimensions are shown for reference purposes only.
Dimensions are in inches and millimeters unless otherwise specified. Values in brackets are metric equivalents.
Specifications subject to change.
Technical Support Center
1-800-522-6752
www.tycoelectronics.com

Tooling

Manually Operated Tools

These tools are designed for hand operation and low volume production work or where power is not available. They feature the CERTI-CRIMP ratchet device for controlled compression crimping to provide uniform terminations consistently.

Pneumatic Tools

Designed for medium production, these semi-automatic power tools offer the convenience of hand tools plus the effortless precision and speed of machines. They are built for long, rugged service and are equipped with removable crimping dies for terminating a variety of AMP products.

DYNA-CRIMP Tools

Power Unit Only (Includes Pressure Release)
115 Volts — 69120-1
230 Volts — 69120-2

The DYNA-CRIMP Power Unit can be equipped with various heads and dies for terminating COPALUM products in wire ranges from AWG 8 to 500 MCM [8 to 253 mm²]. A complete line of accessories is also available, permitting use in portable and stationary applications, as well as for multi-head crimping.



Heavy Head Hand Tool



Pneumatic Tool
Part Number 69010



Pneumatic Tool
Part Number 69015



Pneumatic Tool
Part Number 68068 – As shown
Part Number 68068-3 – Foot pedal; can be bench mounted



Electro-Hydraulic Power Unit



Power Unit
Crimping Head
Part Number 69099



Power Unit
Crimping Head
Part Number 69082

Accessories for DYNA-CRIMP Tools

Accessory Part Number	Description		Power Unit Part Number
59907-7 1-59907-5 2-59907-1 2-59908-1 2-59907-8	7 ft. [2.13 m] Handle Control Assembly — Hose and Cord 15 ft. [4.57 m] Handle Control Assembly — Hose and Cord 21 ft. [6.4 m] Handle Control Assembly — Hose and Cord 21 ft. [6.4 m] Handle Control Assembly — Cord (Less Hose) 28 ft. [8.53 m] Handle Control Assembly — Hose and Cord	Pressure Release on Power Unit Only	69120-1 69120-2
68284-1	15 ft. [4.57 m] Foot Switch Assembly (needs hose assembly)		
59909-3 59909-7 1-59909-5 2-59909-1	3 ft. [0.91 m] Hose Assembly 7 ft. [2.13 m] Hose Assembly 15 ft. [4.57 m] Hose Assembly 21 ft. [6.4 m] Hose Assembly	311470-1 Quick Disconnect Coupling (Hose Half) and 68284-1 Foot Switch Assembly needed with these hose assemblies.	
59220 59220-2 59221	3-way Multi-Directional Valve 3-way Multi-Directional Valve (Elec. Control) 6-way Multi-Directional Valve	For use with Foot Switch only	

Product Facts

- **Simplifies and facilitates power integration for washers, dryers, air conditioners and other household appliances**
- **Power Rings snap into 3-position phenolic Power Block, further facilitating installation**
- **Power Block is easily mounted in appliance using sheet metal screws**
- **Power Block and Power Rings allow easy attachment of power cords or direct wiring with 10 through 6 AWG [5 through 15 mm^2] cable in accordance with National Electrical Code requirements**
- **Recognized under the Component Program of Underwriters Laboratories Inc. File No. E60677 (Power Block) File No. E13288 (Power Ring)**
- **Certified by Canadian Standards Association File No. LR84713 (Power Block) File No. LR7189 (Power Ring)**

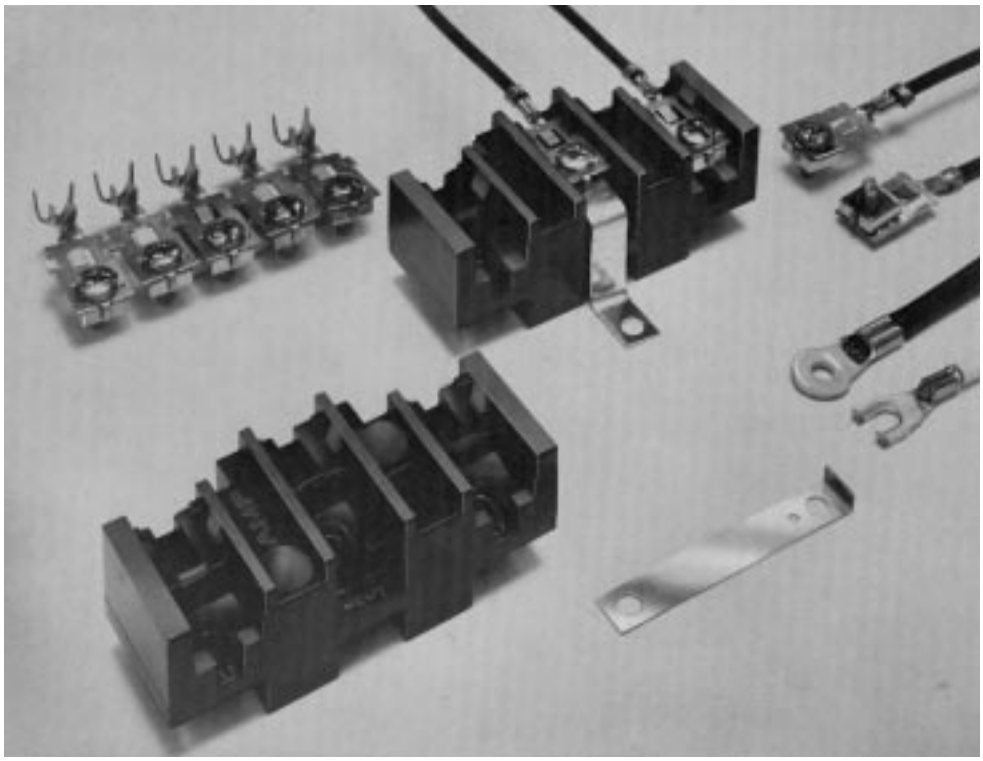

AMP Power Blocks and Power Rings are the main elements in the AMP "power block connector system" that simplifies integrating power connections in washers, dryers, air conditioners and other household appliances. These Power Blocks and Power Rings permit you to easily attach standard power cords or stranded copper wire within a range of 10 through 6 AWG [5 through 15mm^2] to appliances in accordance with National Electrical Code requirements. The connecting wire can remain unterminated or it can be terminated to any precision, formed or custom-made terminal with a maximum thickness of .125 [3.18]. or you can use AMP optional Ring Tongue or Flanged Spade Terminals to connect the wire to the Power Rings.

Installing the "power block connector system" in the appliance is a "snap". The 3-position phenolic Power Block is mounted in the appliance using sheet metal screws. The brass or pre-tin Power Rings snap into the Power Block. Optional AMP tooling further facilitates connecting power cords or wires.

Outstanding features of the "connector system" include Power Rings with pre-assembled nuts and screws; 16 to 10 AWG [1.25 to 6 mm^2] capability (including two 14's or two 12's) in the same contact for harnessing simplicity; and a contact retention tyne that locks into the Power Block without need for additional hardware.

For complete product information, order Catalog 89-896

Products for Industrial & Commercial Applications

Dimensions are shown for reference purposes only.

Dimensions are in inches and millimeters unless otherwise specified. Values in brackets are metric equivalents.

Specifications subject to change.

Technical Support Center
1-800-522-6752
www.tycoelectronics.com

Power Block and Power Rings Connector System

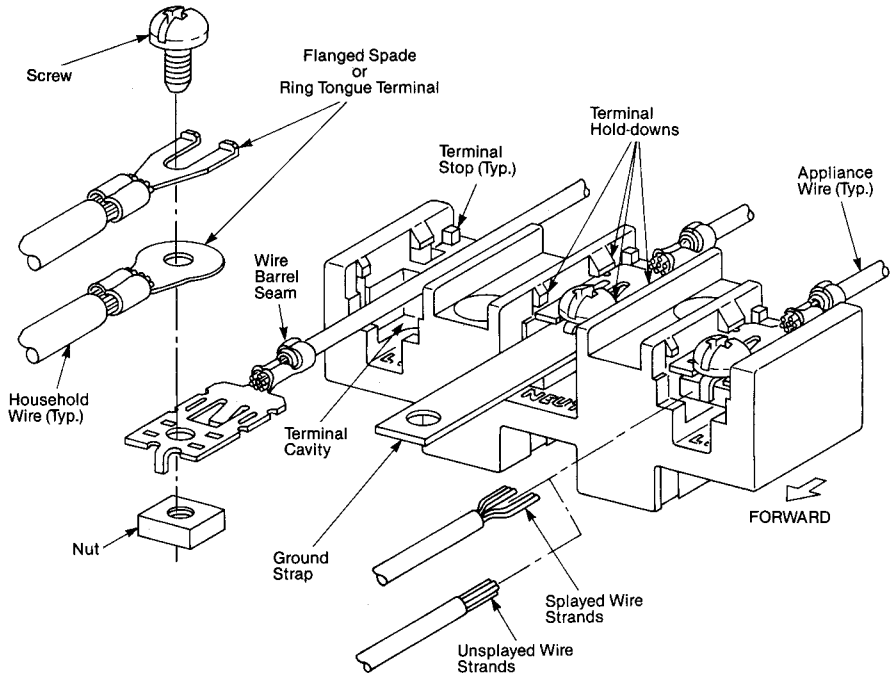

Power Block

Part Number 520942-2

Material:

Black phenolic 94V-1 Rated

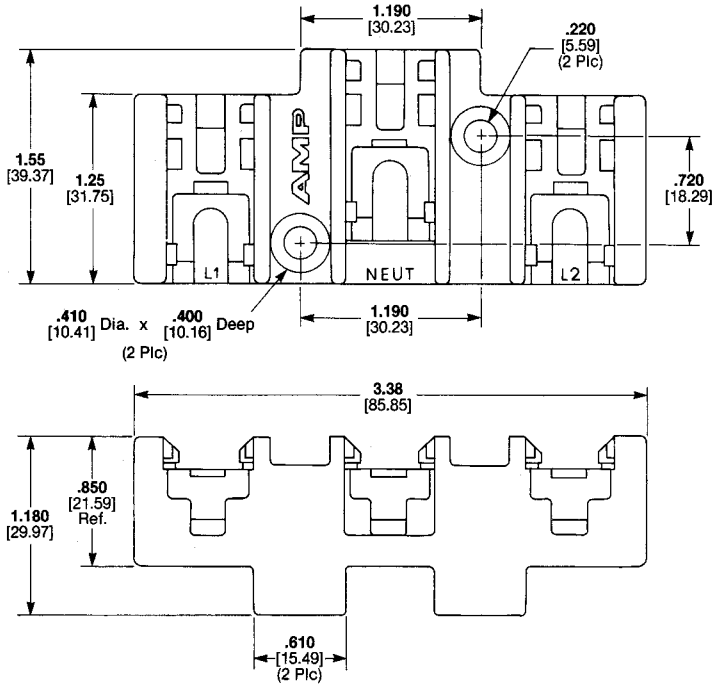

Note: Appliance and household wire supplied by user.

For complete product information, order Catalog 89-896

Power Rings

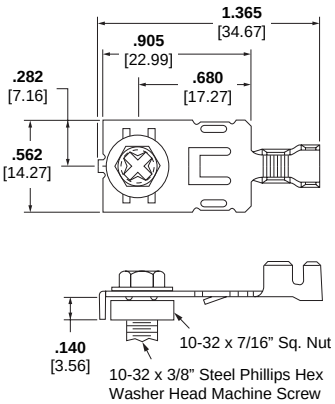

Wire Size		Insulation Diameter Range	Finish	Power Ring Part Number	Applicator Number
AWG	mm²				
16-12	1.25-3.00	**.110-.160** 2.79-4.06	Pre-Tin Plated	520994-1	567253-2

Grounding Strap

Material:
Plain Copper

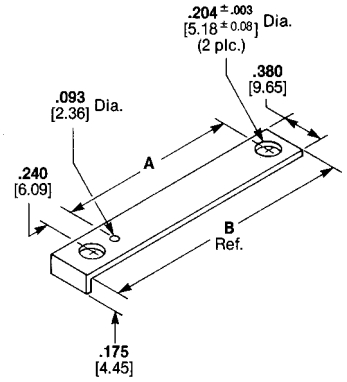

Dimensions		Part Numbers
A	B	
1.650 41.91	**2.340** 59.44	63450-1*
1.40 35.56	**2.09** 53.10	1217143-1

*Pre-tin

For complete product information, order Catalog 89-896

Products for Industrial & Commercial Applications
Dimensions are shown for reference purposes only.
Dimensions are in inches and millimeters unless otherwise specified. Values in brackets are metric equivalents.
Specifications subject to change.
Technical Support Center
1-800-522-6752
www.tycoelectronics.com

Product Facts

- **Accepted as the industry standard by leading kitchen-range manufacturers**
- **Designed for easy connection of surface burners in ranges of virtually any manufacturer**
- **Permits a manufacturer to use high-speed equipment to terminate leads**
- **Permits easy interchange of cooking or burner elements**
- **Available with a housing of heat-resistant phenolic for temperatures up to 300°C…or with a porcelain housing for temperatures above 300°C**
- **Lab tests indicate connectors still good after 3500 mating/unmating cycles**
- **Housings snap into any of the four AMP Clips**
- **Recognized under the Component Program of Underwriters Laboratories Inc. File No. E70200**
- **Certified by the Canadian Standards Association File No. LR7189**

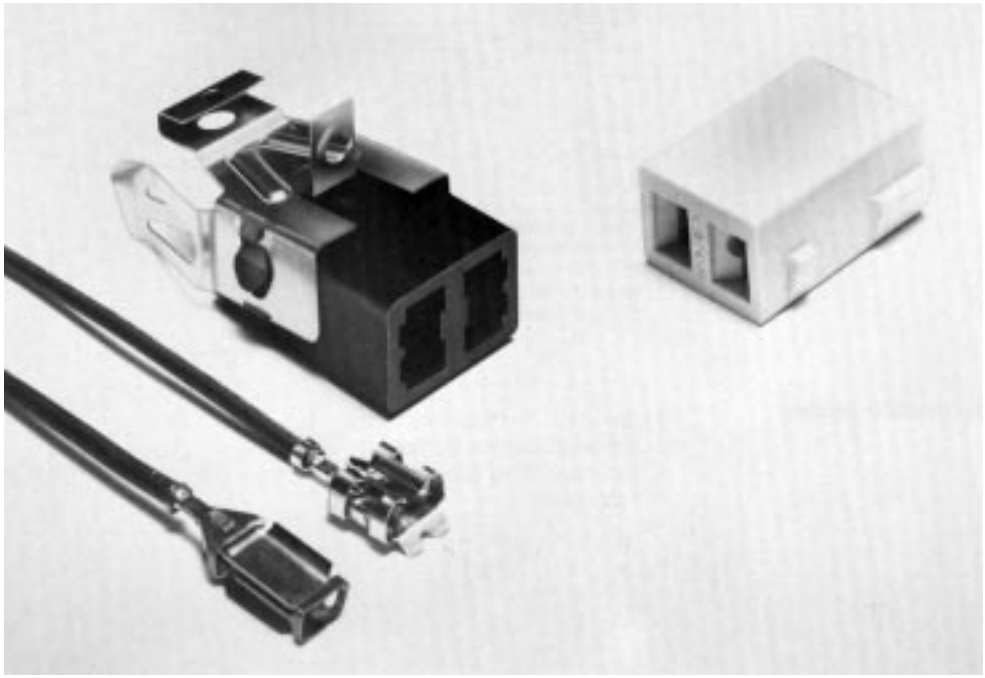

Accepted as the industry standard by virtually all kitchen-range manufacturers, AMP Surface Burner Connector system comprises a phenolic or procelain housing, a plug-in receptacle and a clip. This system is easily assembled. The phenolic or porcelain housing snaps into the clip and the receptacle plugs into the housing. Receptacle design permits a manufacturer to use "high-speed" equipment to terminate leads. The clips are available in four different configurations to satisfy various range and burner designs.

The heat-resistant phenolic housings are used for temperatures up to 300°C…the porcelain housings for temperatures over 300°C. The phenolic housings are used primarily on ranges with "standard" burners and the porcelain housings on ranges with interchangeable cooking modules such as grills and broilers. The porcelain housings are available in two configurations, one of which snaps into an AMP Clip, and the second into a "purchased" or "user" Clip.

AMP Surface Burner connector systems facilitate changing cooking elements. Tests demonstrate these systems still operating after 3500 cycles of mating and unmating. All connectors carry UL recognition and CSA certification.

If you need special Surface Burner Connectors for special uses or applications, please contact Tyco Electronics.

Products for Industrial & Commercial Applications
Dimensions are shown for reference purposes only.
Dimensions are in inches and millimeters unless otherwise specified. Values in brackets are metric equivalents.
Specifications subject to change.
Technical Support Center 1-800-522-6752 www.tycoelectronics.com

Heavy-Duty Burner Connector Housings, Clips and Receptacles

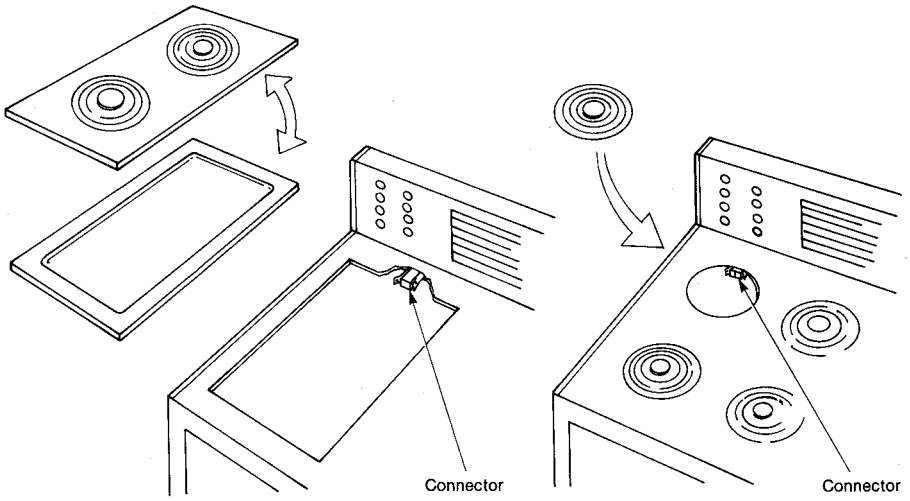

For Ranges with Interchangeable Cooking Modules **For Ranges with Standard Burner Configurations**

Housings

Housing Part Number 770524-1

Material:

Phenolic, black, heat resistant grade

Housings Part Number 770324-1

Material:

Porcelain, natural

Note: 770324-1 Housing is used with an AMP Clip

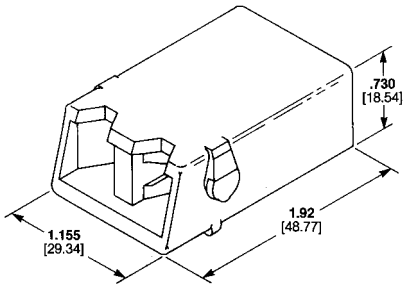

Part Number 770524-1

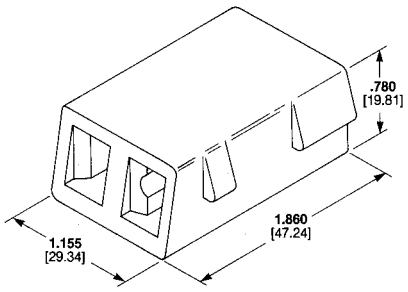

Part Number 770324-1

Receptacle

Material:

Part Number 640748-1–Copper, Nickel-Tin, Alloy 725

Part Number 770321-1–Copper Alloy 195

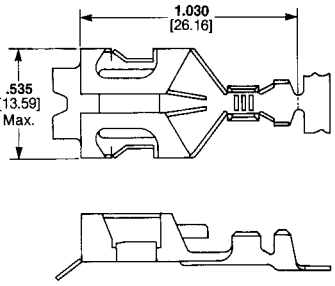

Part Number 640748-1[1]

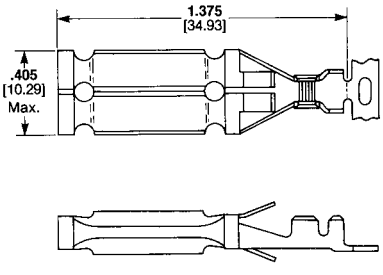

Part Number 770321-1[2]

[1] Receptacle Part Number 640748 used with standard surface burner units only.
[2] Receptacle Part Number 770321 used with interchangeable modules only.

Products for Industrial & Commercial Applications
Dimensions are shown for reference purposes only.
Dimensions are in inches and millimeters unless otherwise specified. Values in brackets are metric equivalents.
Specifications subject to change.
Technical Support Center
1-800-522-6752
www.tycoelectronics.com

Connector Clips

Material:
Stainless Steel

Part Number 640750-1

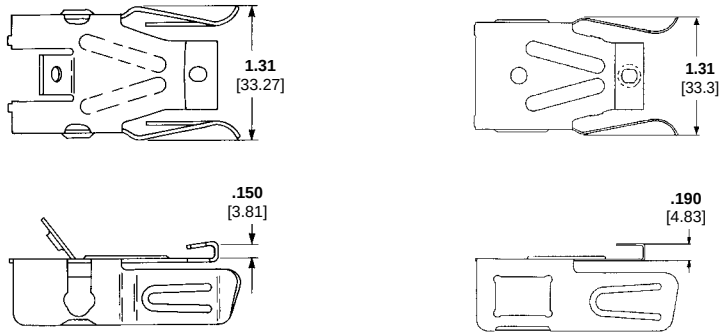

Fluorescent Tube Socket, Housings

Housing Part Number 1-480344-0

Material:
Phenolic, black

Lamp Socket Terminals

Material and Finish:
Brass; see table below right for finish.

Wire Size:
20-16 AWG [0.5-1.4 mm²]

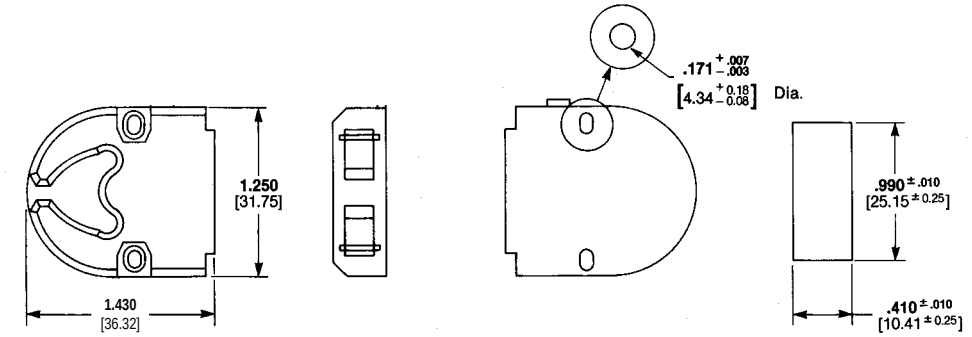

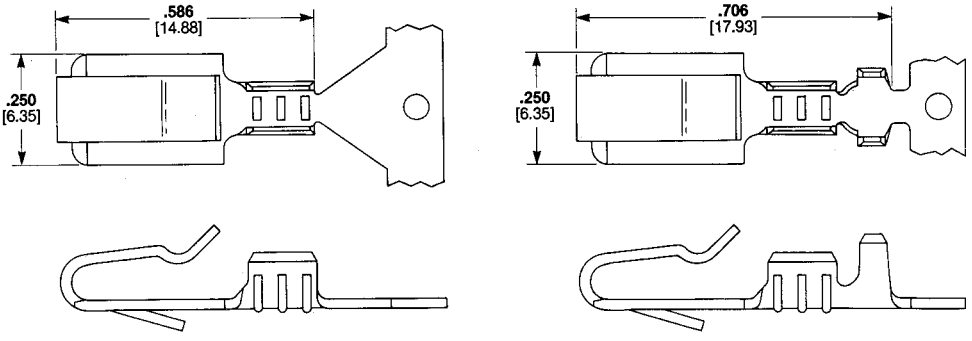

Type A
Part Number 640483

Type B
Part Number 60805

Type	Insulation Diameter Maximum	Finish	Quick-Change Part Numbers	Quick-Change Applicator for AMP-O-LECTRIC	Integral Die Applicator for AMPOMATOR	Hand Tool
A	—	—	640483-1	466695-2	466695-1	—
B	.130 3.3	—	60805-2	466390-2	466390-1	47044-2
		Tin	60805-3	*	*	

*Contact the Technical Support Center for applicator information.

Application Tooling
See chart at right for hand tool and applicator numbers.

Products for Industrial & Commercial Applications
Dimensions are shown for reference purposes only.
Dimensions are in inches and millimeters unless otherwise specified. Values in brackets are metric equivalents.
Specifications subject to change.
Technical Support Center
1-800-522-6752
www.tycoelectronics.com

Introduction



As a result of the increasing globalization of the Appliance marketplace, products designed to comply with the European Rast 5 and 2.5 standard have become increasingly more important to U.S. manufacturers. AMP is able to support designs to this standard by offering a complete range of products and corresponding application tooling for harness manufacture. RAST 5 and 2.5 are acronyms for:

Raster	Centerline
Anschluss	Connection
Steck	Plug
Technik	Technology
5/2.5	Pitch in mm

The RAST standard describes standard mating interface features for various appliance components such as motors, water pumps, etc. Covered in the mating interface features are:

- Position of locking latch
- Position of keying ribs
- Position of polarization ribs
- Number of positions
- Electrical function of each tab

AMP has several product families from crimp-snap to insulation displacement connector systems (IDC) which are designed in accordance with the RAST standard and can assist manufacturers who are just beginning to use RAST compatible components as well as those ready to implement fully automated production of a wiring harness. Appliances and harnesses built using the RAST designed components and harnesses have the potential to offer the following advantages:

- Lower labor cost
  - Lower rate of plugging errors
  - Less potential for damage to individual contacts during assembly
  - Lower stress for the final assembly worker due to lower mating forces

AMP Standard Timer in In-Line Mating Technology

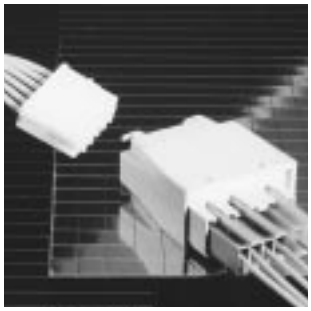

AMP Standard Timer connectors according to RAST 5.0 mm standard have been developed to connect RAST 5 components (like motors, leach pumps, water level regulators, relays and push-button switches) in the Household Appliances Industry.

They meet industry requirements, for example multiple position connectors, secure connection even at inclining mating as well as a sturdy contact design.

AMP Standard Power Timer contacts, for use with Standard Timer housings, are suitable for high density and high current capacity up to 16 A.

Housing is designed for end-to-end stacking without contact loss. They are available in different keying and locking versions from 2- positions to 12-positions.

Standard Timer contacts can be used with stranded wires from 0.5 mm^2 to 2.5 mm^2 and can be double terminated. Of course, the corresponding tooling is available, too.

AMP Standard Timer connectors are tested by VDE and fulfill all requirements acc. to VDE 0700 (air gap, creepage distance, glow wire test, ball pressure test, creepage current strength).

UL recognized component.

Interior Locking

Connection to the Components according to RAST 5 Standard

① Connected Timer Contact
② Standard Timer Housing with Interior Locking
③ Keying
④ Polarization
⑤ Locking Latch
⑥ Cover (Secondary Locking)
⑦ RAST 5 Tab Array

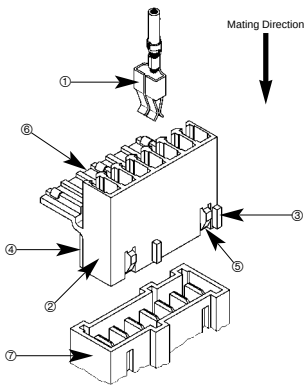

Exterior Locking

Connection to the Components according to RAST 5 Standard

① Connected Timer Contact
② Standard Timer Housing with Exterior Locking
③ Keying
④ Polarization
⑤ Locking Latch
⑥ RAST 5 Tab Array

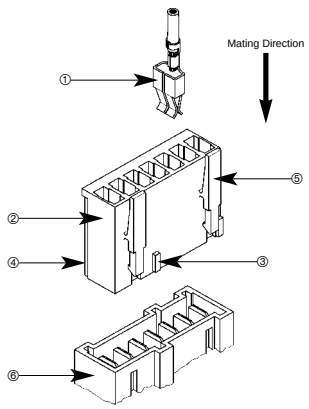

For complete product information, order Catalog 296599

Products for Industrial & Commercial Applications
Dimensions are shown for reference purposes only.
Dimensions are in inches and millimeters unless otherwise specified. Values in brackets are metric equivalents.
Specifications subject to change.
Technical Support Center
1-800-522-6752
www.amp.com

Keying Plan from Mating Direction

① Locking Latch
② Keying Rib
③ Keying Rib between Cavity
④ Slanted Keying Rib
⑤ Polarization Rib
⑥ Cavity Number

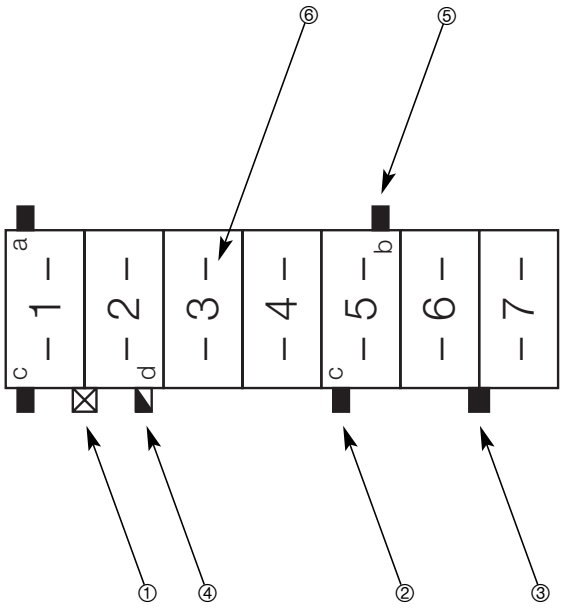

Standard Timer Housings

2 Position RAST 5 Variations

RAST 5 Version	Keying Version	Color	Part Numbers	
			Interior Locking	Exterior Locking
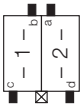	Natural	928344-2	6-928247-2	—
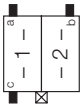	Black	—	928247-2	—
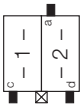	Gray	3-964951-2	—	—
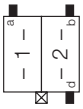	Green	6-928344-2	5-928247-2	—
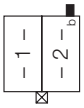	Yellow	928343-2	—	—

For complete product information, order Catalog 296599

Products for Industrial & Commercial Applications
Dimensions are shown for reference purposes only.
Dimensions are in inches and millimeters unless otherwise specified. Values in brackets are metric equivalents.
Specifications subject to change.
Technical Support Center
1-800-522-6752
www.amp.com

Standard Timer Housings

3 Position RAST 5 Variation

RAST 5 Version	Keying Version	Color	Part Numbers	
			Interior Locking	Exterior Locking
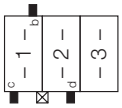	03-A	Natural	928344-3	—

3 Position Special Variations

Version	Keying Version	Color	Part Numbers	
			Interior Locking	Exterior Locking
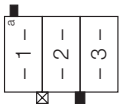	—	Natural	928343-3	—
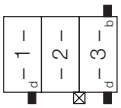	—	Yellow	—	928247-3

4 Position RAST 5 Variations

RAST 5 Version	Keying Version	Color	Part Numbers	
			Interior Locking	Exterior Locking
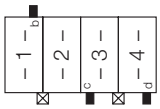	04-A	Natural	928344-4	—
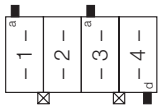	04-F	White	—	2-928247-4

4 Position Special Variation

Version	Keying Version	Color	Part Numbers	
			Interior Locking	Exterior Locking
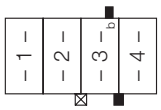	—	Natural	928343-4	—

5 Position RAST 5 Variation

RAST 5 Version	Keying Version	Color	Part Numbers	
			Interior Locking	Exterior Locking
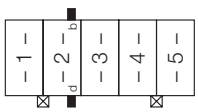	05-B	Black	—	2-928247-5

For complete product information, order Catalog 296599

Products for Industrial & Commercial Applications
Dimensions are shown for reference purposes only.
Dimensions are in inches and millimeters unless otherwise specified. Values in brackets are metric equivalents.
Specifications subject to change.
Technical Support Center
1-800-522-6752
www.amp.com

Standard Timer Housings

5 Position Special Variation

Version	Keying Version	Color	Part Numbers	
			Interior Locking	Exterior Locking
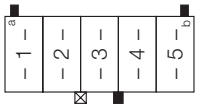	—	Natural	928343-5	—

6 Position RAST 5 Variation

RAST 5 Version	Keying Version	Color	Part Numbers	
			Interior Locking	Exterior Locking
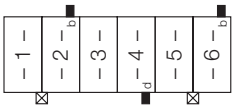	06-D	Blue	2-928247-6	—

6 Position Special Variation

Version	Keying Version	Color	Part Numbers	
			Interior Locking	Exterior Locking
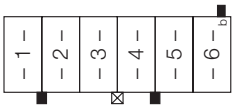	—	Natural	928343-6	—

7 Position RAST 5 Variation

RAST 5 Version	Keying Version	Color	Part Numbers	
			Interior Locking	Exterior Locking
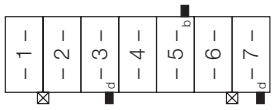	07-C	Gray	928247-7	—

7 Position Special Variations

Version	Keying Version	Color	Part Numbers	
			Interior Locking	Exterior Locking
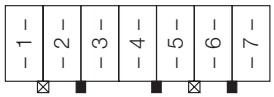	—	Natural	928343-7	—
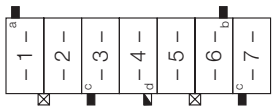	—	Natural	928344-7	—

For complete product information, order Catalog 296599

Products for Industrial & Commercial Applications
Dimensions are shown for reference purposes only.
Dimensions are in inches and millimeters unless otherwise specified. Values in brackets are metric equivalents.
Specifications subject to change.
Technical Support Center
1-800-522-6752
www.amp.com

Standard Timer Housings

8 Position Special Variation

Version	Keying Version	Color	Part Numbers	
			Interior Locking	Exterior Locking
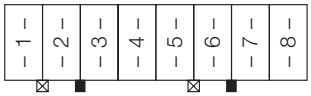	—	Black	2-928343-8	—

9 Position RAST 5 Variation

RAST 5 Version	Keying Version	Color	Part Numbers	
			Interior Locking	Exterior Locking
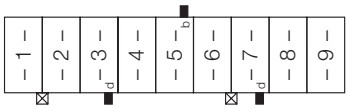	09-D	Blue	—	2-928247-9

9 Position Special Variation

Version	Keying Version	Color	Part Numbers	
			Interior Locking	Exterior Locking
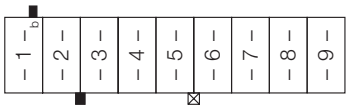	—	Natural	927740-9	—

10 Position Special Variation

Version	Keying Version	Color	Part Numbers	
			Interior Locking	Exterior Locking
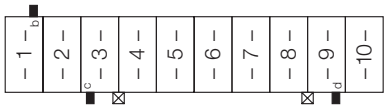	—	Brown	—	1-928247-0

11 Position RAST 5 Variation

RAST 5 Version	Keying Version	Color	Part Numbers	
			Interior Locking	Exterior Locking
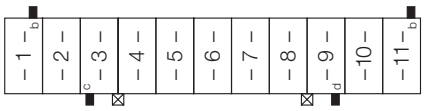	11-B	Black	—	1-928247-1

For complete product information, order Catalog 296599

Products for Industrial & Commercial Applications
Dimensions are shown for reference purposes only.
Dimensions are in inches and millimeters unless otherwise specified. Values in brackets are metric equivalents.
Specifications subject to change.
Technical Support Center
1-800-522-6752
www.amp.com

Standard Timer Housings

11 Position Special Variation

Version	Color	Part Numbers	
		Interior Locking	Exterior Locking
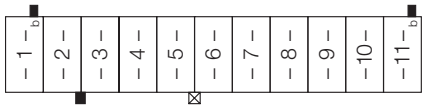	Natural	1-927740-1	—

12 Position Special Variation

Version	Color	Part Numbers	
		Interior Locking	Exterior Locking
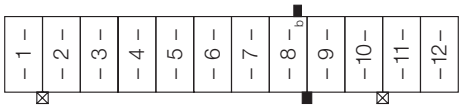	Natural	1-927740-2	—

Standard Timer Connector

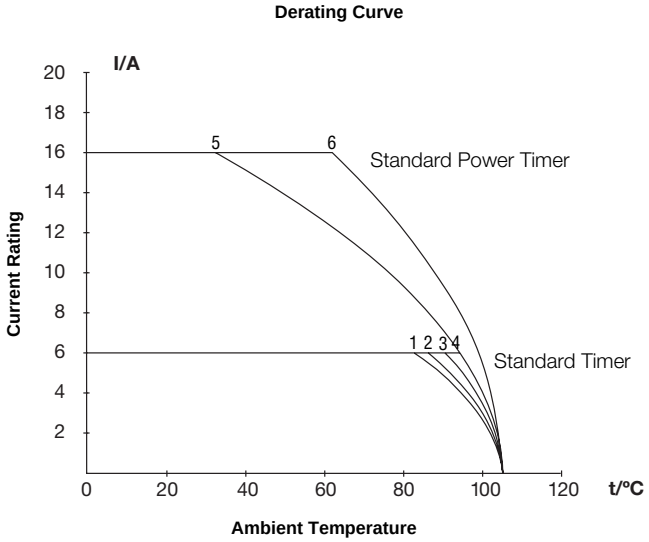

Material:
Brass, tin plated

Mating Part:
6.3 tab

Material:
Brass, tin plated

Wire:
FLK 0.5/0.75 and 1.5 mm²
Current Carrying Capacity to 6 A:
1 = Wire 0.50 mm², 11pos. housing
2 = Wire 0.75 mm², 11pos. housing
3 = Wire 0.50 mm², 02pos. housing
4 = Wire 0.75 mm², 02pos. housing
Current Carrying Capacity to 16 A:
5 = Wire 1.50 mm², 11pos. housing
6 = Wire 1.50 mm², 02pos. housing

Standard Timer Contacts

Standard Timer Contacts with One Locking Lance

	Wire Size mm²	Insulation Dia. Range	Material	Finish	Part Numbers
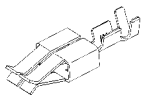	0.5-1.0	**.055-.091** 1.4-2.3	Brass	Tin Plated	928820-1
	1.0-2.5	**.118-169** 3.0-4.3			926973-1

Standard Timer Contacts with Two Locking Lances

	Wire Size mm²	Insulation Dia. Range	Material	Finish	Part Numbers
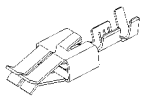	0.5-1.0	**.055-.091** 1.4-2.3	Brass	Tin Plated	964201-1
	1.0-2.5	**.118-169** 3.0-4.3			964202-1

For complete product information, order Catalog 296599

Products for Industrial & Commercial Applications
Dimensions are shown for reference purposes only.
Dimensions are in inches and millimeters unless otherwise specified. Values in brackets are metric equivalents.
Specifications subject to change.
Technical Support Center
1-800-522-6752
www.amp.com

Standard Timer Contacts

Standard Power Timer Contacts

	Wire Size mm²	Insulation Dia. Range	Material	Finish	Part Numbers
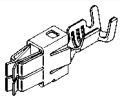	1.0-2.5	**.087-.118** 2.2-3.0	Copper Iron	Tin Plated	964203-1
				Silver Plated	964203-5
	1.5-3.0	**.078 x .118** max. 2 x 3.0		Tin Plated	964204-1
				Silver Plated	964204-5

AMP Multifitting Connectors in In-Line Mating Technology



The modular connector system incorporates modern in-line mating technology on a .197 [5.0 mm] centerline, 2- to 12 positions, with no loss of spacing and a variety of keying possibilities.

The AMP Multifitting connector system program was developed by AMP for economic and efficient cable harness production using newly developed AMP application tooling. This connector program uses insulation displacement contacts: AMP Multifitting connectors.

This system is suitable for termination of 0.5 mm² to 0.75 mm² leads. The housing cover has two special functions providing reliable strain relief by independent locking in the housing, as well as allowing a 90° or 180° wire exit.

AMP Multifitting connectors are fed into the machine from reels, saving time and money.

The new modular component connecting devices, .248 [6.3 mm] or .189 [4.8 mm] tabs, are terminated quickly and easily.

The AMP Multifitting connector is tested by VDE.

UL recognized component.

AMP Multifitting Edge One-Piece Connector System

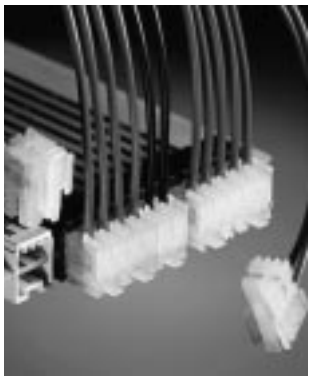

This AMP Multifitting Edge One-Piece Connector System in .197 [5.0 mm] centerline has specially been developed for the household appliance industry.

Suitable are 12- as well as 7-stranded wires with a wire size range of 0.5 mm² to 0.75 mm².

The single wires are fixed through a separate cover. Only a few basic part numbers are needed to enable customers to produce all the required keying in accordance to RAST 5 standard during the termination process on the AMP application tooling.

Misalignment is avoided through a separately mounted frame on the printed circuit board, which has also a latching function.

As termination equipment a complete range from hand tool up to a modular high-speed harness-maker for manufacturing double ended cable assemblies, using insulation displacement technique, can be offered.

For complete product information, order Catalog 296599

Products for Industrial & Commercial Applications
Dimensions are shown for reference purposes only.
Dimensions are in inches and millimeters unless otherwise specified. Values in brackets are metric equivalents.
Specifications subject to change.
Technical Support Center 1-800-522-6752 www.amp.com

AMP MONO-SHAPE Connectors in In-Line Mating Technology



AMP MONO-SHAPE connectors represent a valid solution to the ever-increasing requirements for production and application flexibility. They are high productivity, great flexibility, quality, minimum applied cost.

AMP MONO-SHAPE product-line includes a full range of .197 [5.0 mm] pitch modular connector contents with similar outer shape, several variations in the mating area such as PC Board and .248 x .031 [6.3 x 0.8 mm] tabs (RAST 5), plus a version for harness shunts.

AMP MONO-SHAPE connection system adopts the IDC termination technology, which improves application results and quality level.

The AMP MONO-SHAPE product range, combined with the performances and properties offered by the termination system, allows the manufacture of extremely complicated harness structures while still maintaining high production levels.

AMP MT-Edge Card Edge Connectors

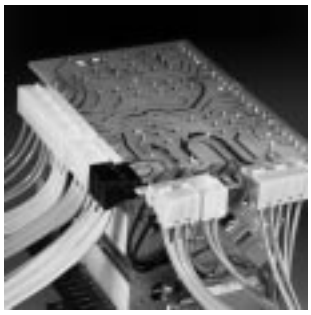

AMP developed the MT-Edge Card Edge, .197 [5.0 mm] centerline, connector range for the household appliance industry. AMP offers a choice of Edge Connector types, contact centerlines and number of housing positions.

Pre-loaded insulation displacement contacts are terminated using fully or semi-automatic machines.

This connector system meets the requirements of DIN 41611, Part 6 and VDE 0627, 6 A current rating.

Features

- Optimum contact design with special forked spring construction
- Application tooling is available for various production volumes

AMP DUOPLUG 2.5 Connector System for Wire-to-Board Applications

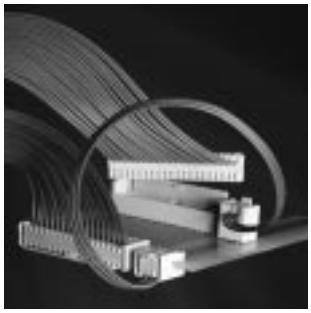

The AMP DUOPLUG 2.5 Connector System offers a complete printed circuit board system which is suitable for edge as well as female to header applications using the same female part.

The top of the female contact is provided with an IDC slot, a technique which permits high speed wire termination. Application tooling specially developed for this system can produce cable assemblies with connectors at one or both ends.

The connector keying is produced with a cutting unit on the application tooling machine.

Applications

- Household Appliances
- Consumer Electronics
- Telecommunication Industry
- Automotive Industry
- Vending Machines
- Measuring Devices and others

For complete product information, order Catalog 296599

Products for Industrial & Commercial Applications
Dimensions are shown for reference purposes only.
Dimensions are in inches and millimeters unless otherwise specified. Values in brackets are metric equivalents.
Specifications subject to change.
Technical Support Center
1-800-522-6752
www.amp.com

Engineering Notes

Products for Industrial & Commercial Applications

Dimensions are shown for reference purposes only.

Dimensions are in inches and millimeters unless otherwise specified. Values in brackets are metric equivalents.

Specifications subject to change.

Technical Support Center
1-800-522-6752
www.amp.com

Table of Contents

Eurostyle Terminal Blocks

Introduction 8002
One-Piece Board Mount 8003-8015
Two-Piece 8016-8039
Wire Protector Versions 8040-8046
Surface Mount 8047
Screwless 8048, 8049

Barrier Strips

Selector Chart 8050, 8051
Tri-Barrier Strips 8052-8065
Dual-Barrier Strips 8066-8074
Barrier Strip Sockets 8075, 8076
Accessories (Covers) 8077

Card Edge Connector Systems 8078-8082

Interface Module Systems 8083-8086

Europa Terminal Blocks

Introduction 8087
Selector Chart 8088, 8089
8mm Pitch, 30A, Series TSB230 ....8090, 8091
10mm Pitch, 30A, Series TSB500 8092-8094
10mm Pitch, Fused Blocks, Series 503Si 8095
12mm Pitch, 40A, Series TSB1000 8096-8098
12mm Pitch, Fused Blocks, Series 1003Si 8099
Fuse Holders, Series 500Si 8100

NEMA Terminal Blocks

Miniature Blocks, 100 Series 8101-8104
Medium Duty, 600 & 700 Series 8105-8115
Medium Duty, Phenolic, 500 Series 8116-8120
Heavy Duty, Phenolic, 200 Series 8121-8126
Intermediate Heavy Duty, 800 Series 8127-8130

Products for Industrial & Commercial Applications
Dimensions are shown for reference purposes only.
Dimensions are in inches and millimeters unless otherwise specified. Values in brackets are metric equivalents.
Specifications subject to change.
Technical Support Center
1-800-522-6752
www.tycoelectronics.com

Product Facts

- **Certified by the VDE Testing and Certification Institute VDE File No. 6917 (Two-Piece Version) VDE File No. 6920 (One-Piece Version)**
- **Recognized under the Component Program of Underwriters Laboratories Inc., File No. E60677**
- **Certified by Canadian Standards Association, File No. LR 703157**
- **Produced under Quality Management System certified to ISO 9001**

Technical Documents

Product Specification:
108-20166 Terminal Block Connectors, Stacking PC Board Mount

Application Specification:
114-20079 Terminal Block Stacking Connectors

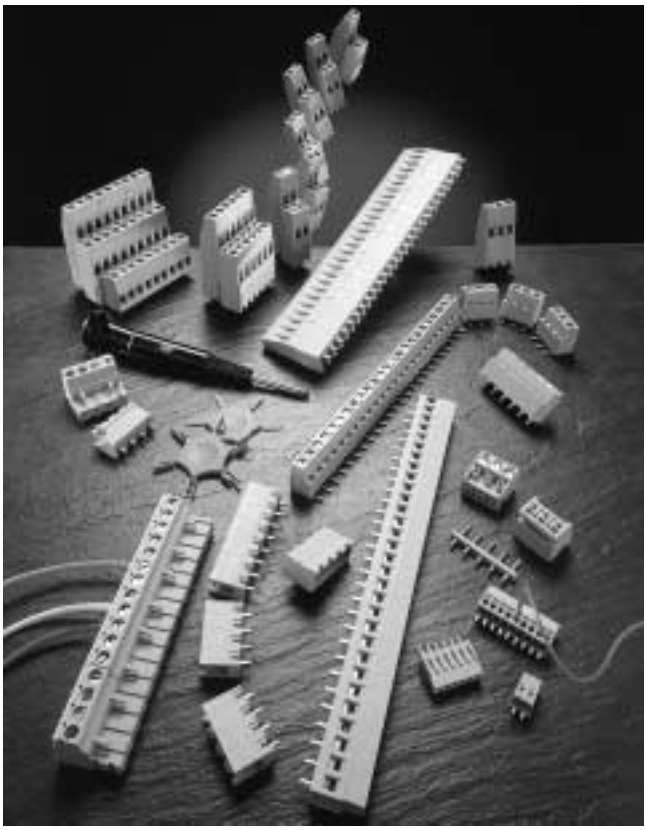

Terminal Block connectors feature the special rising cage clamp design. The modular design of Terminal Block connectors consists of one-piece board mount terminal blocks and plug connectors with mating straight and right-angle shrouded headers. A special version – which can be mated either 90° or 180° – completes the product line. Terminal Block connectors offer several advantages:

- IR Reflow compatible
- Terminal Block connectors have a rising cage clamp which promotes numerous reliable connections and disconnections at field installations
- All blocks are supplied with open screws which shortens the time for connection
- The double captive screw system guards against lost screws
- All metal parts are non-magnetic
- The housing material used is halogen free Polyamide 6.6 according to UL 94V-0 (self-extinguishing)
- The housing funnel entry design enables an easier product application
- The open bottom design facilitates the PCB washing and reduces trapping of soldering fumes and dirt, with better insulation
- Available on the board mount connectors is test probe access to determine if an electrical connection has been made
- Contacts are post tin-plated with nickel underplate which allows the product to be used in specially corrosive environments

Board mount connectors, as well as pc board plugs and headers, are stackable end-to-end without loss of centerline spacing.

Ease of assembly is facilitated by built-in interlocks on the housings. Pre-assembled products can be delivered upon request. Adhesive labels are available to number the cavities. Customer specific labeling is also available upon request.

Terminal Block connectors are interchangeable with most existing products and pc board footprint is fully compatible with existing Industry Standards.

For complete product information, order Catalog 1308389

Products for Industrial & Commercial Applications

Dimensions are shown for reference purposes only.

Dimensions are in inches and millimeters unless otherwise specified. Values in brackets are metric equivalents.

Specifications subject to change.

Technical Support Center
1-800-522-6752
www.tycoelectronics.com

Board Mount, Side Wire Entry

Board Mount 1.0 mm² Solid Wire, 2.54 mm Centerline, Side Wire Entry Color – Gray

UL Rating – 150 V, 10 A 16-30 AWG

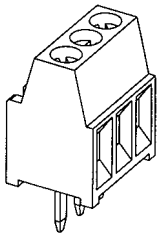

Suggested Screw Torque—
1.73 in.-lbs.

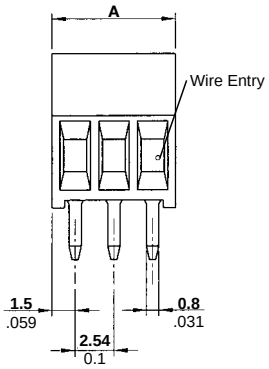

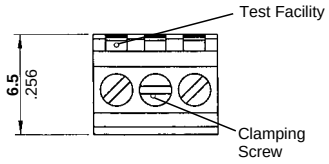

Recommended PC Board Layout

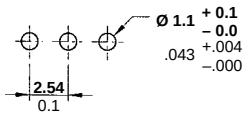

No. of Positions	Dim. A	Part Numbers
2	**5.54** [0.218]	282834-2
3	**8.08** [0.318]	282834-3
4	**10.62** [0.418]	282834-4
5	**13.16** [0.518]	282834-5
6	**15.70** [0.618]	282834-6
7	**18.24** [0.718]	282834-7
8	**20.78** [0.818]	282834-8
9	**23.32** [0.918]	282834-9
10	**25.86** [1.018]	1-282834-0
11	**28.40** [1.118]	1-282834-1
12	**30.94** [1.218]	1-282834-2

Board Mount 1.0 mm² Solid Wire, 5.08 mm Centerline, Side Wire Entry Color – Gray

UL Rating – 300 V, 10 A 16-30 AWG

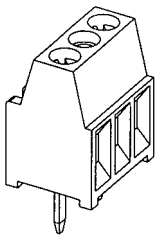

Suggested Screw Torque—
1.73 in.-lbs.

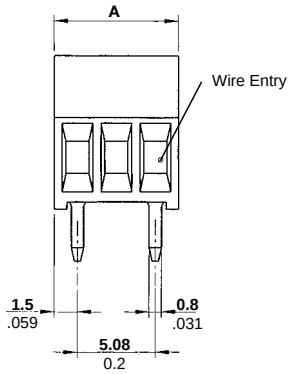

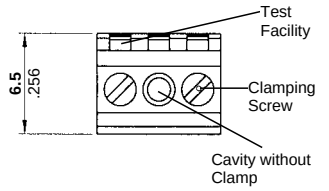

Recommended PC Board Layout

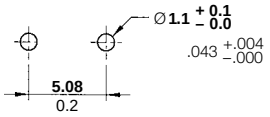

No. of Positions	Dim. A	Part Numbers
2	**8.08** [0.318]	282835-2
3	**13.16** [0.518]	282835-3
4	**18.24** [0.718]	282835-4
5	**23.32** [0.918]	282835-5
6	**28.40** [1.118]	282835-6

For complete product information, order Catalog 1308389

Products for Industrial & Commercial Applications

Dimensions are shown for reference purposes only.

Dimensions are in inches and millimeters unless otherwise specified. Values in brackets are metric equivalents.

Specifications subject to change.

Technical Support Center
1-800-522-6752
www.tycoelectronics.com

Board Mount, Side Wire Entry

Board Mount
1.5 mm² Solid Wire w/Interlock, 3.5 mm Centerline, Side Wire Entry
Color – Green

UL Rating – 150 V, 12 A
14-30 AWG

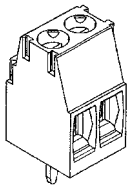

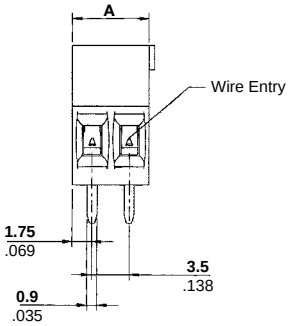

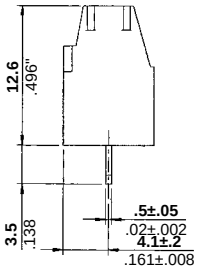

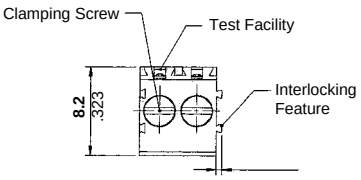

Recommended PC Board Layout

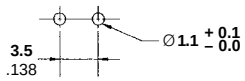

Suggested Screw Torque—
2.2 in.-lbs.

No. of Positions	Dim. A	Part Numbers
2	**7.0** [0.276]	284391-2
3	**10.5** [0.413]	284391-3
4	**14.0** [0.551]	284391-4
5	**17.5** [0.689]	284391-5
6	**21.0** [0.827]	284391-6
7	**24.5** [0.965]	284391-7
8	**28.0** [1.102]	284391-8
9	**31.5** [1.240]	284391-9
10	**35.0** [1.378]	1-284391-0
11	**38.5** [1.516]	1-284391-1
12	**42.0** [1.654]	1-284391-2
13	**45.5** [1.791]	1-284391-3

No. of Positions	Dim. A	Part Numbers
14	**49.0** [1.929]	1-284391-4
15	**52.5** [2.067]	1-284391-5
16	**56.0** [2.205]	1-284391-6
17	**59.5** [2.343]	1-284391-7
18	**63.0** [2.480]	1-284391-8
19	**66.5** [2.618]	1-284391-9
20	**70.0** [2.756]	2-284391-0
21	**73.5** [2.894]	2-284391-1
22	**77.0** [3.031]	2-284391-2
23	**80.5** [3.169]	2-284391-3
24	**84.0** [3.307]	2-284391-4
25	**87.5** [3.445]	2-284391-5

Board Mount
1.5 mm² Solid Wire w/Interlock, 3.81 mm Centerline, Side Wire Entry
Color – Green

UL Rating – 150 V, 12 A
14-30 AWG

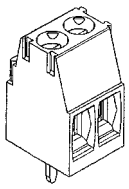

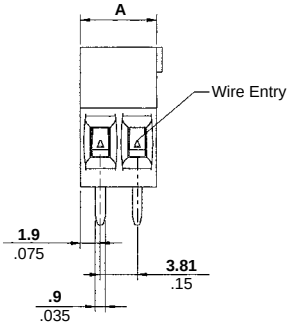

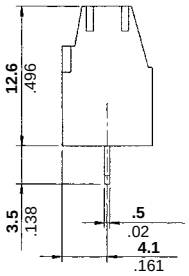

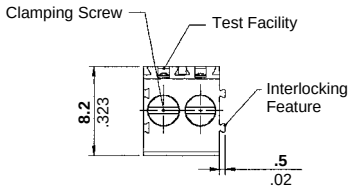

Recommended PC Board Layout

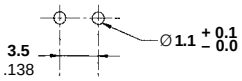

Suggested Screw Torque—
2.2 in.-lbs.

No. of Positions	Dim. A	Part Numbers
2	**7.62** [0.300]	284392-2
3	**11.43** [0.450]	284392-3
4	**15.24** [0.600]	284392-4
5	**19.05** [0.750]	284392-5
6	**22.86** [0.900]	284392-6
7	**26.67** [1.050]	284392-7
8	**30.48** [1.200]	284392-8
9	**34.29** [1.350]	284392-9
10	**38.10** [1.500]	1-284392-0
11	**41.91** [1.650]	1-284392-1
12	**45.72** [1.800]	1-284392-2
13	**49.53** [1.950]	1-284392-3

No. of Positions	Dim. A	Part Numbers
14	**53.34** [2.100]	1-284392-4
15	**57.15** [2.250]	1-284392-5
16	**60.96** [2.400]	1-284392-6
17	**64.77** [2.550]	1-284392-7
18	**68.58** [2.700]	1-284392-8
19	**72.39** [2.850]	1-284392-9
20	**76.20** [3.000]	2-284392-0
21	**80.01** [3.150]	2-284392-1
22	**83.82** [3.300]	2-284392-2
23	**87.63** [3.450]	2-284392-3
24	**91.44** [3.600]	2-284392-4
25	**95.25** [3.750]	2-284392-5

Products for Industrial & Commercial Applications

Dimensions are shown for reference purposes only.

Dimensions are in inches and millimeters unless otherwise specified. Values in brackets are metric equivalents.

Specifications subject to change.

Technical Support Center
1-800-522-6752
www.tycoelectronics.com

Board Mount, Side Wire Entry

Board Mount (Low Profile)
1.5 mm² Solid Wire w/Interlock, 5.0 mm Centerline, Side Wire Entry
Color – Gray

UL Rating – 300 V, 13.5 A
16-30 AWG
10 A for field wiring applications

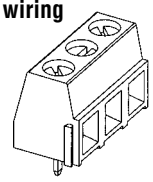

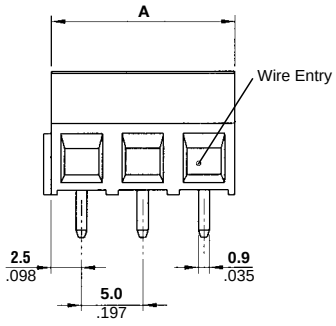

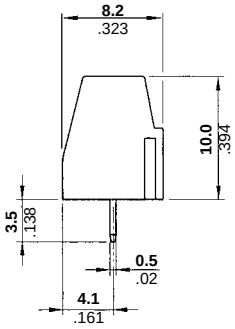

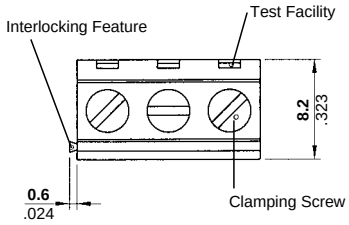

Recommended PC Board Layout

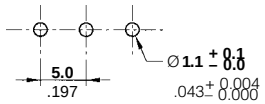

Suggested Screw Torque—
4.4 in.-lbs.

No. of Positions	Dim. A	Part Numbers
2	**10.0** [0.394]	282836-2
3	**15.0** [0.591]	282836-3
4	**20.0** [0.787]	282836-4
5	**25.0** [0.984]	282836-5
6	**30.0** [1.181]	282836-6
7	**35.0** [1.378]	282836-7
8	**40.0** [1.575]	282836-8
9	**45.0** [1.772]	282836-9
10	**50.0** [1.968]	1-282836-0
11	**55.0** [2.165]	1-282836-1
12	**60.0** [2.362]	1-282836-2
13	**65.0** [2.559]	1-282836-4

No. of Positions	Dim. A	Part Numbers
14	**70.0** [2.756]	1-282836-5
15	**75.0** [2.953]	1-282836-6
16	**80.0** [3.150]	1-282836-7
17	**85.0** [3.346]	1-282836-8
18	**90.0** [3.543]	1-282836-9
19	**95.0** [3.740]	2-282836-0
20	**100.0** [3.937]	2-282836-1
21	**105.0** [4.134]	2-282836-2
22	**110.0** [4.331]	2-282836-3
23	**115.0** [4.528]	2-282836-4
24	**120.0** [4.724]	2-282836-5
25	**125.0** [4.921]	2-282836-6

Board Mount
2.5 mm² Solid Wire w/Interlock, 5.0 mm Centerline, Side Wire Entry

UL Rating – 300 V, 17.5 A
12-30 AWG
15 A for field wiring applications

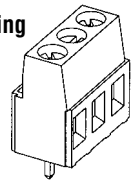

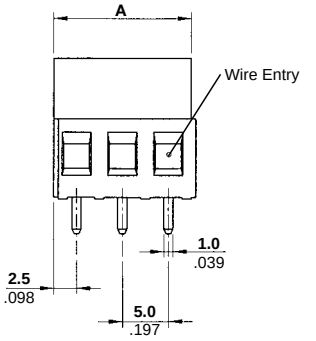

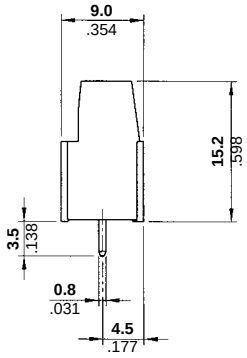

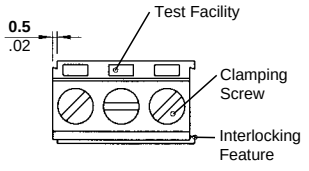

Recommended PC Board Layout

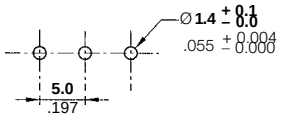

Suggested Screw Torque—
4.4 in.-lbs.

No. of Positions	Dim. A	Part Numbers			
		Green	Gray	Blue	Black
2	**10.0** [0.394]	796683-2	282840-2	796681-2	796682-2
3	**15.0** [0.591]	796683-3	282840-3	796681-3	796682-3
4	**20.0** [0.787]	796683-4	282840-4	796681-4	796682-4
5	**25.0** [0.984]	796683-5	282840-5	796681-5	796682-5
6	**30.0** [1.181]	796683-6	282840-6	796681-6	796682-6
7	**35.0** [1.378]	796683-7	282840-7	796681-7	796682-7
8	**40.0** [1.575]	796683-8	282840-8	796681-8	796682-8
9	**45.0** [1.772]	796683-9	282840-9	796681-9	796682-9
10	**50.0** [1.968]	1-796683-0	1-282840-0	1-796681-0	1-796682-0
11	**55.0** [2.165]	1-796683-1	1-282840-1	1-796681-1	1-796682-1
12	**60.0** [2.362]	1-796683-2	1-282840-2	1-796681-2	1-796682-2
13	**65.0** [2.559]	1-796683-3	1-282840-3	1-796681-3	1-796682-3

No. of Positions	Dim. A	Part Numbers			
		Green	Gray	Blue	Black
14	**70.0** [2.756]	1-796683-4	1-282840-4	1-796681-4	1-796682-4
15	**75.0** [2.953]	1-796683-5	1-282840-5	1-796681-5	1-796682-5
16	**80.0** [3.150]	1-796683-6	1-282840-6	1-796681-6	1-796682-6
17	**85.0** [3.346]	1-796683-7	1-282840-7	1-796681-7	1-796682-7
18	**90.0** [3.543]	1-796683-8	1-282840-8	1-796681-8	1-796682-8
19	**95.0** [3.740]	1-796683-9	1-282840-9	1-796681-9	1-796682-9
20	**100.0** [3.937]	2-796683-0	2-282840-0	2-796681-0	2-796682-0
21	**105.0** [4.134]	2-796683-1	2-282840-1	2-796681-1	2-796682-1
22	**110.0** [4.331]	2-796683-2	2-282840-2	2-796681-2	2-796682-2
23	**115.0** [4.528]	2-796683-3	2-282840-3	2-796681-3	2-796682-3
24	**120.0** [4.724]	2-796683-4	2-282840-4	2-796681-4	2-796682-4
25	**125.0** [4.921]	2-796683-5	2-282840-5	2-796681-5	2-796682-5

Note: BUCHANAN Terminal Block Series B02C4VXXT has been superceded/replaced with 796681-x.
RDI Terminal Block Series 5KEV-xx has been superceded/replaced with 796683-x (green) or 796682-x (black).

Products for Industrial & Commercial Applications

Dimensions are shown for reference purposes only.

Dimensions are in inches and millimeters unless otherwise specified. Values in brackets are metric equivalents.

Specifications subject to change.

Technical Support Center
1-800-522-6752
www.tycoelectronics.com

Board Mount, Side Wire Entry

Board Mount
4.0 mm² Solid Wire w/Interlock, 5.0 mm Centerline, Side Wire Entry

UL Rating – 300 V, 24 A
12-30 AWG
20 A for field wiring applications

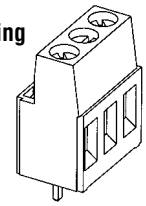

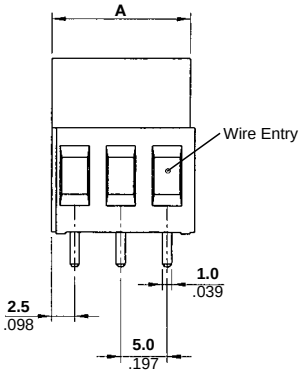

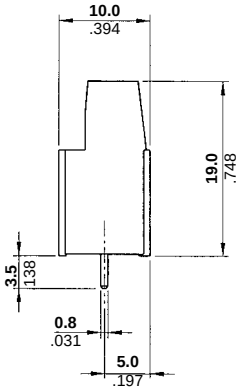

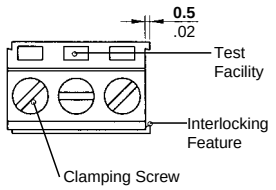

Recommended PC Board Layout

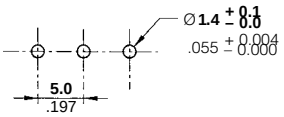

Suggested Screw Torque—
4.3 in.-lbs.

No. of Positions	Dim. A	Part Numbers	
		Gray	Blue
2	**10.0** [0.394]	282856-2	796686-2
3	**15.0** [0.591]	282856-3	796686-3
4	**20.0** [0.787]	282856-4	796686-4
5	**25.0** [0.984]	282856-5	796686-5
6	**30.0** [1.181]	282856-6	796686-6
7	**35.0** [1.378]	282856-7	796686-7
8	**40.0** [1.575]	282856-8	796686-8
9	**45.0** [1.772]	282856-9	796686-9
10	**50.0** [1.968]	1-282856-0	1-796686-0
11	**55.0** [2.165]	1-282856-1	1-796686-1
12	**60.0** [2.362]	1-282856-2	1-796686-2
13	**65.0** [2.559]	1-282856-3	1-796686-3

No. of Positions	Dim. A	Part Numbers	
		Gray	Blue
14	**70.0** [2.756]	1-282856-5	1-796686-4
15	**75.0** [2.953]	1-282856-6	1-796686-5
16	**80.0** [3.150]	1-282856-7	1-796686-6
17	**85.0** [3.346]	1-282856-8	1-796686-7
18	**90.0** [3.543]	1-282856-9	1-796686-8
19	**95.0** [3.740]	2-282856-0	1-796686-9
20	**100.0** [3.937]	2-282856-1	2-796686-0
21	**105.0** [4.134]	2-282856-2	2-796686-1
22	**110.0** [4.331]	2-282856-3	2-796686-2
23	**115.0** [4.528]	2-282856-4	2-796686-3
24	**120.0** [4.724]	2-282856-5	2-796686-4
25	**125.0** [4.921]	2-282856-6	2-796686-5

Note: BUCHANAN Terminal Block Series B03C4VXXT has been superceded/replaced with 796686-x.

Board Mount (Low Profile)
1.5 mm² Solid Wire w/Interlock, 5.08 mm Centerline, Side Wire Entry
Color – Gray

UL Rating – 300 V, 13.5 A
16-30 AWG
10 A for field wiring applications

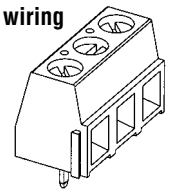

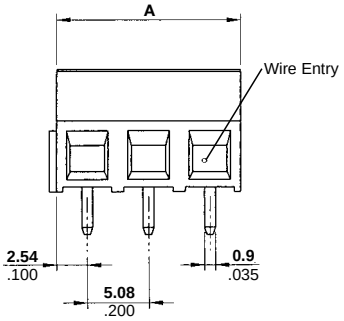

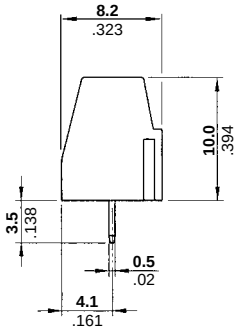

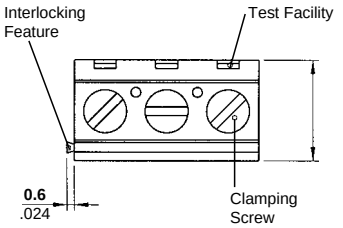

Recommended PC Board Layout

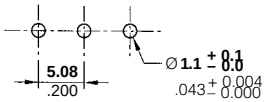

Suggested Screw Torque—
4.4 in.-lbs.

No. of Positions	Dim. A	Part Numbers
2	**10.16** [0.400]	282837-2
3	**15.24** [0.600]	282837-3
4	**20.32** [0.800]	282837-4
5	**25.40** [1.000]	282837-5
6	**30.48** [1.200]	282837-6
7	**35.56** [1.400]	282837-7
8	**40.64** [1.600]	282837-8
9	**45.72** [1.800]	282837-9
10	**50.80** [2.000]	1-282837-0
11	**55.88** [2.200]	1-282837-1
12	**60.96** [2.400]	1-282837-2
13	**66.04** [2.600]	1-282837-6

No. of Positions	Dim. A	Part Numbers
14	**71.12** [2.800]	1-282837-7
15	**76.20** [3.000]	1-282837-8
16	**81.28** [3.200]	1-282837-9
17	**86.36** [3.400]	2-282837-0
18	**91.44** [3.600]	2-282837-1
19	**96.52** [3.800]	2-282837-2
20	**101.60** [4.000]	2-282837-3
21	**106.68** [4.200]	2-282837-4
22	**111.76** [4.400]	2-282837-5
23	**116.84** [4.600]	2-282837-6
24	**121.92** [4.800]	2-282837-7
25	**127.00** [5.000]	2-282837-8

Products for Industrial & Commercial Applications

Dimensions are shown for reference purposes only.

Dimensions are in inches and millimeters unless otherwise specified. Values in brackets are metric equivalents.

Specifications subject to change.

Technical Support Center
1-800-522-6752
www.tycoelectronics.com

Board Mount, Side Wire Entry

Board Mount
2.5 mm² Solid Wire w/Interlock, 5.08 mm Centerline, Side Wire Entry
Color – Gray

UL Rating – 300 V, 17.5 A
12-30 AWG
15 A for field wiring applications

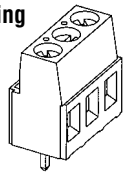

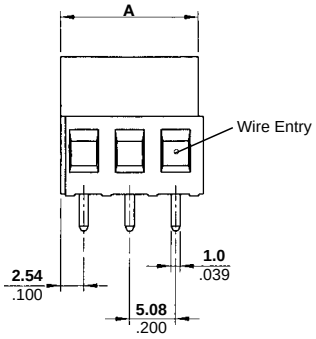

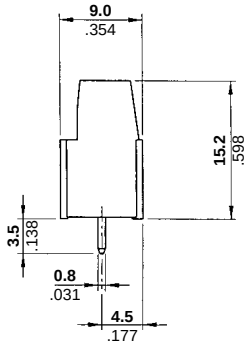

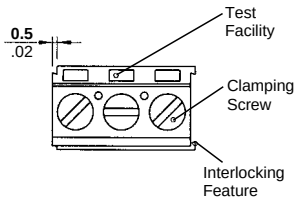

Recommended PC Board Layout

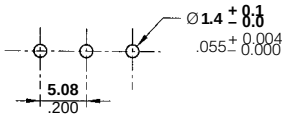

Suggested Screw Torque—
4.4 in.-lbs.

No. of Positions	Dim. A	Part Numbers
2	**10.16** [0.400]	282841-2
3	**15.24** [0.600]	282841-3
4	**20.32** [0.800]	282841-4
5	**25.40** [1.000]	282841-5
6	**30.48** [1.200]	282841-6
7	**35.56** [1.400]	282841-7
8	**40.64** [1.600]	282841-8
9	**45.72** [1.800]	282841-9
10	**50.80** [2.000]	1-282841-0
11	**55.88** [2.200]	1-282841-1
12	**60.96** [2.400]	1-282841-2
13	**66.04** [2.600]	1-282841-6

No. of Positions	Dim. A	Part Numbers
14	**71.12** [2.800]	1-282841-7
15	**76.20** [3.000]	1-282841-8
16	**81.28** [3.200]	1-282841-9
17	**86.36** [3.400]	2-282841-0
18	**91.44** [3.600]	2-282841-1
19	**96.52** [3.800]	2-282841-2
20	**101.60** [4.000]	2-282841-3
21	**106.68** [4.200]	2-282841-4
22	**111.76** [4.400]	2-282841-5
23	**116.84** [4.600]	2-282841-6
24	**121.92** [4.800]	2-282841-7
25	**127.00** [5.000]	2-282841-8

Board Mount
4.0 mm² Solid Wire w/Interlock, 5.08 mm Centerline, Side Wire Entry
Color – Gray

UL Rating – 300 V, 24 A
12-30 AWG
20 A for field wiring applications

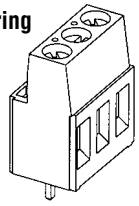

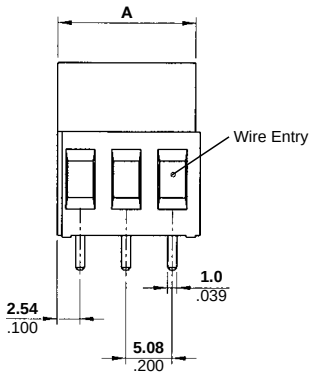

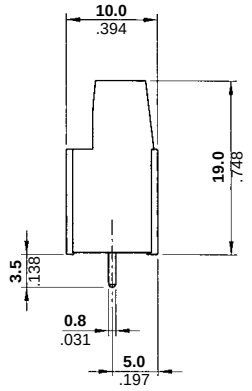

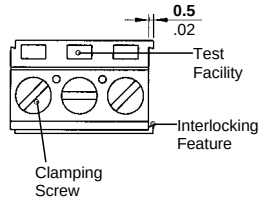

Recommended PC Board Layout

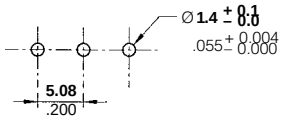

Suggested Screw Torque—
4.34 in.-lbs.

No. of Positions	Dim. A	Part Numbers
2	**10.16** [0.400]	282857-2
3	**15.24** [0.600]	282857-3
4	**20.32** [0.800]	282857-4
5	**25.40** [1.000]	282857-5
6	**30.48** [1.200]	282857-6
7	**35.56** [1.400]	282857-7
8	**40.64** [1.600]	282857-8
9	**45.72** [1.800]	282857-9
10	**50.80** [2.000]	1-282857-0
11	**55.88** [2.200]	1-282857-1
12	**60.96** [2.400]	1-282857-2
13	**66.04** [2.600]	1-282857-3

No. of Positions	Dim. A	Part Numbers
14	**71.12** [2.800]	1-282857-4
15	**76.20** [3.000]	1-282857-5
16	**81.28** [3.200]	1-282857-6
17	**86.36** [3.400]	1-282857-7
18	**91.44** [3.600]	1-282857-8
19	**96.52** [3.800]	1-282857-9
20	**101.60** [4.000]	2-282857-0
21	**106.68** [4.200]	2-282857-1
22	**111.76** [4.400]	2-282857-2
23	**116.84** [4.600]	2-282857-3
24	**121.92** [4.800]	2-282857-4
25	**127.00** [5.000]	2-282857-5

Products for Industrial & Commercial Applications

Dimensions are shown for reference purposes only.

Dimensions are in inches and millimeters unless otherwise specified. Values in brackets are metric equivalents.

Specifications subject to change.

Technical Support Center
1-800-522-6752
www.tycoelectronics.com

Board Mount, Top Wire Entry

Board Mount
1.5 mm² Solid Wire
3.5 mm Centerline,
Top Wire Entry w/Interlock,
Color – Green

UL Rating – 150 V, 12 A
14-30 AWG

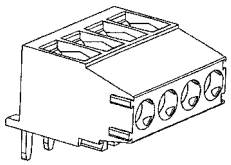

Suggested Screw Torque—
2.2 in.-lbs.

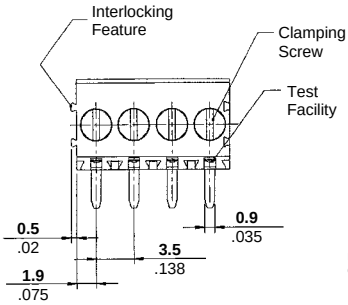

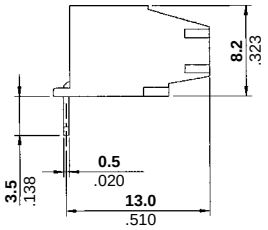

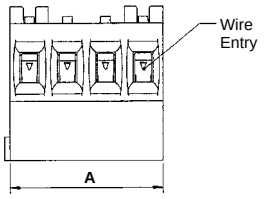

Recommended PC Board Layout

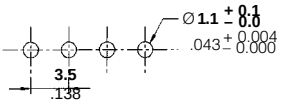

No. of Positions	Dim. A	Part Numbers
2	**7.0** [0.276]	284414-2
3	**10.5** [0.413]	284414-3
4	**14.0** [0.551]	284414-4
5	**17.5** [0.689]	284414-5
6	**21.0** [0.827]	284414-6
7	**24.5** [0.965]	284414-7
8	**28.0** [1.102]	284414-8
9	**31.5** [1.240]	284414-9
10	**35.0** [1.378]	1-284414-0
11	**38.5** [1.516]	1-284414-1
12	**42.0** [1.654]	1-284414-2
13	**45.5** [1.791]	1-284414-3

No. of Positions	Dim. A	Part Numbers
14	**49.0** [1.929]	1-284414-4
15	**52.5** [2.067]	1-284414-5
16	**56.0** [2.205]	1-284414-6
17	**59.5** [2.343]	1-284414-7
18	**63.0** [2.480]	1-284414-8
19	**66.5** [2.618]	1-284414-9
20	**70.0** [2.756]	2-284414-0
21	**73.5** [2.894]	2-284414-1
22	**77.0** [3.031]	2-284414-2
23	**80.5** [3.169]	2-284414-3
24	**84.0** [3.307]	2-284414-4
25	**87.5** [3.445]	2-284414-5

Board Mount
1.5 mm² Solid Wire
3.81 mm Centerline,
Top Wire Entry w/Interlock,
Color – Green

UL Rating – 150 V, 12 A
14-30 AWG

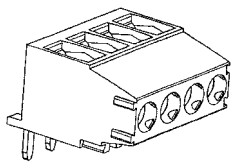

Suggested Screw Torque—
2.2 in.-lbs.

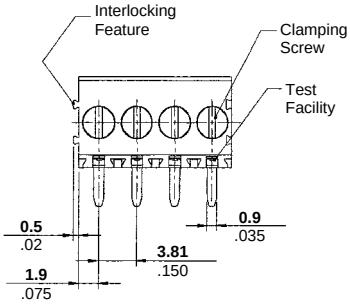

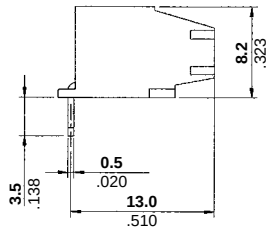

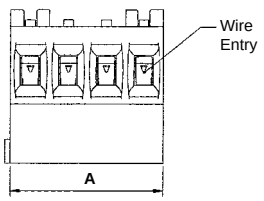

Recommended PC Board Layout

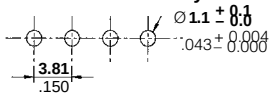

No. of Positions	Dim. A	Part Numbers
2	**7.62** [0.300]	284415-2
3	**11.43** [0.450]	284415-3
4	**15.24** [0.600]	284415-4
5	**19.05** [0.750]	284415-5
6	**22.86** [0.900]	284415-6
7	**26.67** [1.050]	284415-7
8	**30.48** [1.200]	284415-8
9	**34.29** [1.350]	284415-9
10	**38.10** [1.500]	1-284415-0
11	**41.91** [1.650]	1-284415-1
12	**45.72** [1.800]	1-284415-2
13	**49.53** [1.950]	1-284415-3

No. of Positions	Dim. A	Part Numbers
14	**53.34** [2.100]	1-284415-4
15	**57.15** [2.250]	1-284415-5
16	**60.96** [2.400]	1-284415-6
17	**64.77** [2.550]	1-284415-7
18	**68.58** [2.700]	1-284415-8
19	**72.39** [2.850]	1-284415-9
20	**76.20** [3.000]	2-284415-0
21	**80.01** [3.150]	2-284415-1
22	**83.82** [3.300]	2-284415-2
23	**87.63** [3.450]	2-284415-3
24	**91.44** [3.600]	2-284415-4
25	**95.25** [3.750]	2-284415-5

For complete product information, order Catalog 1308389

Products for Industrial & Commercial Applications

Dimensions are shown for reference purposes only.

Dimensions are in inches and millimeters unless otherwise specified. Values in brackets are metric equivalents.

Specifications subject to change.

Technical Support Center
1-800-522-6752
www.tycoelectronics.com

Board Mount, Top Wire Entry

Board Mount, 1.5 mm² Solid Wire, 5.0 mm Centerline, Top Wire Entry, Low Profile Color – Gray

UL Rating – 300 V, 13.5 A
16-30 AWG
10 A for field wiring applications

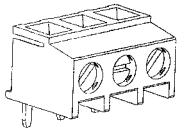

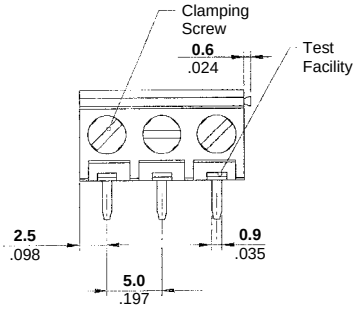

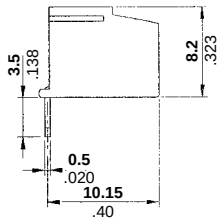

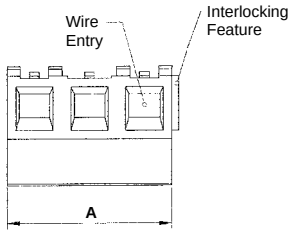

Recommended PC Board Layout

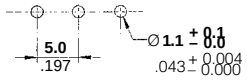

Suggested Screw Torque—
4.4 in.-lbs.

No. of Positions	Dim. A	Part Numbers
2	**10.0** [0.394]	284093-2
3	**15.0** [0.591]	284093-3
4	**20.0** [0.787]	284093-4
5	**25.0** [0.984]	284093-5
6	**30.0** [1.181]	284093-6
7	**35.0** [1.378]	284093-7
8	**40.0** [1.575]	284093-8
9	**45.0** [1.772]	284093-9
10	**50.0** [1.968]	1-284093-0
11	**55.0** [2.165]	1-284093-1
12	**60.0** [2.362]	1-284093-2
13	**65.0** [2.559]	1-284093-3

No. of Positions	Dim. A	Part Numbers
14	**70.0** [2.756]	1-284093-4
15	**75.0** [2.953]	1-284093-5
16	**80.0** [3.150]	1-284093-6
17	**85.0** [3.346]	1-284093-7
18	**90.0** [3.543]	1-284093-8
19	**95.0** [3.740]	1-284093-9
20	**100.0** [3.937]	2-284093-0
21	**105.0** [4.134]	2-284093-1
22	**110.0** [4.331]	2-284093-2
23	**115.0** [4.528]	2-284093-3
24	**120.0** [4.724]	2-284093-4
25	**125.0** [4.921]	2-284093-5

Board Mount 2.5 mm² Solid Wire w/Interlock, 5.0 mm Centerline, Top Wire Entry

UL Rating – 300 V, 17.5 A
12-30 AWG
15 A for field wiring applications

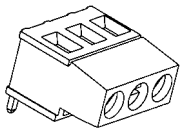

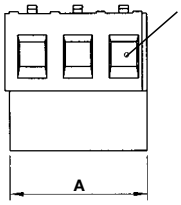

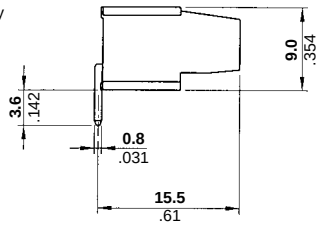

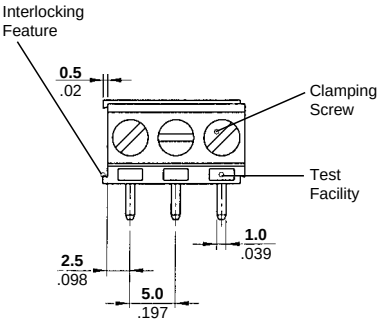

Recommended PC Board Layout

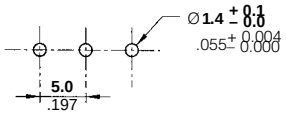

Suggested Screw Torque—
4.4 in.-lbs.

No. of Positions	Dim. A	Part Numbers		
		Grey	Blue	Black
2	**10.0** [0.394]	282850-2	796684-2	796685-2
3	**15.0** [0.591]	282850-3	796684-3	796685-3
4	**20.0** [0.787]	282850-4	796684-4	796685-4
5	**25.0** [0.984]	282850-5	796684-5	796685-5
6	**30.0** [1.181]	282850-6	796684-6	796685-6
7	**35.0** [1.378]	282850-7	796684-7	796685-7
8	**40.0** [1.575]	282850-8	796684-8	796685-8
9	**45.0** [1.772]	282850-9	796684-9	796685-9
10	**50.0** [1.968]	1-282850-0	1-796684-0	1-796685-0
11	**55.0** [2.165]	1-282850-1	1-796684-1	1-796685-1
12	**60.0** [2.362]	1-282850-2	1-796684-2	1-796685-2
13	**65.0** [2.559]	1-282850-3	1-796684-3	1-796685-3

No. of Positions	Dim. A	Part Numbers		
		Grey	Blue	Black
14	**15.0** [0.591]	1-282850-4	1-796684-4	1-796685-4
15	**20.0** [0.787]	1-282850-5	1-796684-5	1-796685-5
16	**25.0** [0.984]	1-282850-6	1-796684-6	1-796685-6
17	**30.0** [1.181]	1-282850-7	1-796684-7	1-796685-7
18	**35.0** [1.378]	1-282850-8	1-796684-8	1-796685-8
19	**40.0** [1.575]	1-282850-9	1-796684-9	1-796685-9
20	**45.0** [1.772]	2-282850-0	2-796684-0	2-796685-0
21	**50.0** [1.968]	2-282850-1	2-796684-1	2-796685-1
22	**55.0** [2.165]	2-282850-2	2-796684-2	2-796685-2
23	**60.0** [2.362]	2-282850-3	2-796684-3	2-796685-3
24	**55.0** [2.165]	2-282850-4	2-796684-4	2-796685-4
25	**60.0** [2.362]	2-282850-5	2-796684-5	2-796685-5

For complete product information, order Catalog 1308389

Note: BUCHANAN Terminal Block Series B02C4HXXT has been superceded/replaced with 796684-xx (blue) and 796685-xx (black).

Products for Industrial & Commercial Applications

Dimensions are shown for reference purposes only.

Dimensions are in inches and millimeters unless otherwise specified. Values in brackets are metric equivalents.

Specifications subject to change.

Technical Support Center
1-800-522-6752
www.tycoelectronics.com

Board Mount, Top Wire Entry

Board Mount
4.0 mm² Solid Wire w/Interlock, 5.0 mm Centerline, Top Wire Entry

UL Rating – 300 V, 24 A
12-30 AWG
20 A for field wiring applications

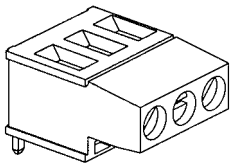

Suggested Screw Torque—
4.34 in.-lbs.

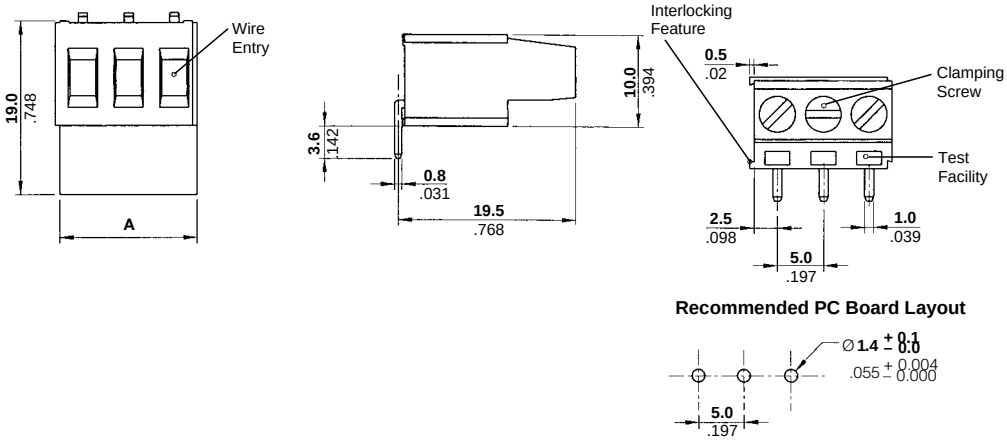

No. of Positions	Dim. A	Part Numbers	
		Gray	Blue
2	**10.0** [0.394]	282862-2	796687-2
3	**15.0** [0.591]	282862-3	796687-3
4	**20.0** [0.787]	282862-4	796687-4
5	**25.0** [0.984]	282862-5	796687-5
6	**30.0** [1.181]	282862-6	796687-6
7	**35.0** [1.378]	282862-7	796687-7
8	**40.0** [1.575]	282862-8	796687-8
9	**45.0** [1.772]	282862-9	796687-9
10	**50.0** [1.968]	1-282862-0	1-796687-0
11	**55.0** [2.165]	1-282862-1	1-796687-1
12	**60.0** [2.362]	1-282862-2	1-796687-2
13	**65.0** [2.559]	1-282862-3	1-796687-3

No. of Positions	Dim. A	Part Numbers	
		Gray	Blue
14	**70.0** [2.756]	1-282862-4	1-796687-4
15	**75.0** [2.953]	1-282862-5	1-796687-5
16	**80.0** [3.150]	1-282862-6	1-796687-6
17	**85.0** [3.346]	1-282862-7	1-796687-7
18	**90.0** [3.543]	1-282862-8	1-796687-8
19	**95.0** [3.740]	1-282862-9	1-796687-9
20	**100.0** [3.937]	2-282862-0	2-796687-0
21	**105.0** [4.134]	2-282862-1	2-796687-1
22	**110.0** [4.331]	2-282862-2	2-796687-2
23	**115.0** [4.528]	2-282862-3	2-796687-3
24	**120.0** [4.724]	2-282862-4	2-796687-4
25	**125.0** [4.921]	2-282862-5	2-796687-5

Note: BUCHANAN Terminal Block Series B02C4HXXT has been superceded/replaced with 796687-xx.

Board Mount
1.5 mm² Solid Wire w/Interlock, 5.08 mm Centerline, Low Profile Color – Gray Top Wire Entry

UL Rating – 300 V, 13.5 A
16-30 AWG
10 A for field wiring applications

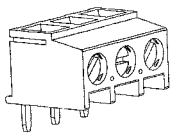

Suggested Screw Torque—
4.4 in.-lbs.

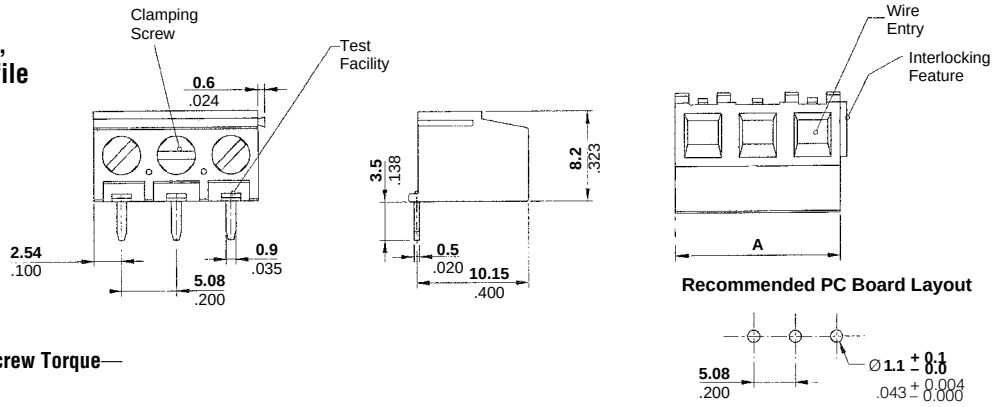

No. of Positions	Dim. A	Part Numbers
2	**10.16** [0.400]	284094-2
3	**15.24** [0.600]	284094-3
4	**20.32** [0.800]	284094-4
5	**25.40** [1.000]	284094-5
6	**30.48** [1.200]	284094-6
7	**35.56** [1.400]	284094-7
8	**40.64** [1.600]	284094-8
9	**45.72** [1.800]	284094-9
10	**50.80** [2.000]	1-284094-0
11	**55.88** [2.200]	1-284094-1
12	**60.96** [2.400]	1-284094-2
13	**66.04** [2.600]	1-284094-3

No. of Positions	Dim. A	Part Numbers
14	**71.12** [2.800]	1-284094-4
15	**76.20** [3.000]	1-284094-5
16	**81.28** [3.200]	1-284094-6
17	**86.36** [3.400]	1-284094-7
18	**91.44** [3.600]	1-284094-8
19	**96.52** [3.800]	1-284094-9
20	**101.60** [4.000]	2-284094-0
21	**106.68** [4.200]	2-284094-1
22	**111.76** [4.400]	2-284094-2
23	**116.84** [4.600]	2-284094-3
24	**121.92** [4.800]	2-284094-4
25	**127.00** [5.000]	2-284094-5

Board Mount, Top Wire Entry

Board Mount
2.5 mm² Solid Wire w/Interlock, 5.08 mm Centerline, Top Wire Entry
Color – Gray

UL Rating – 300 V, 17.5 A
12-30 AWG
15 A for field wiring applications

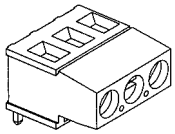

Suggested Screw Torque—
4.4 in.-lbs.

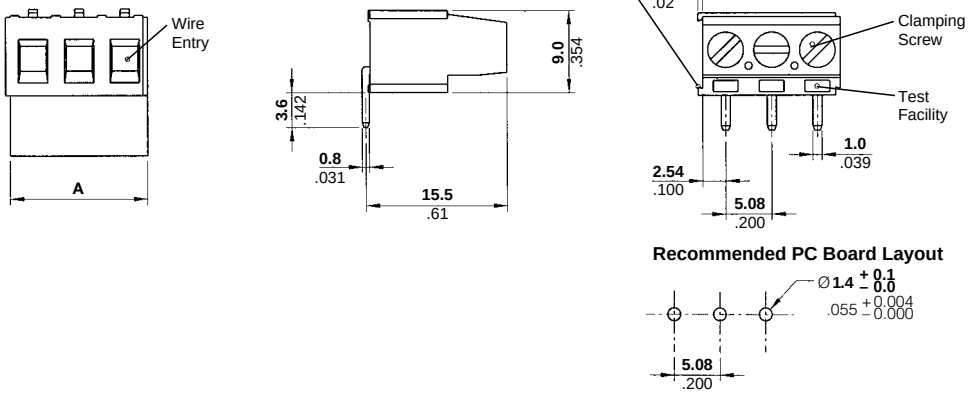

No. of Positions	Dim. A	Part Numbers
2	**10.16** [0.400]	282851-2
3	**15.24** [0.600]	282851-3
4	**20.32** [0.800]	282851-4
5	**25.40** [1.000]	282851-5
6	**30.48** [1.200]	282851-6
7	**35.56** [1.400]	282851-7
8	**40.64** [1.600]	282851-8
9	**45.72** [1.800]	282851-9
10	**50.80** [2.000]	1-282851-0
11	**55.88** [2.200]	1-282851-1
12	**60.96** [2.400]	1-282851-2
13	**66.04** [2.600]	1-282851-3

No. of Positions	Dim. A	Part Numbers
14	**71.12** [2.800]	1-282851-4
15	**76.20** [3.000]	1-282851-5
16	**81.28** [3.200]	1-282851-6
17	**86.36** [3.400]	1-282851-7
18	**91.44** [3.600]	1-282851-8
19	**96.52** [3.800]	1-282851-9
20	**101.60** [4.000]	2-282851-0
21	**106.68** [4.200]	2-282851-1
22	**111.76** [4.400]	2-282851-2
23	**116.84** [4.600]	2-282851-3
24	**121.92** [4.800]	2-282851-4
25	**127.00** [5.000]	2-282851-5

Board Mount
4.0 mm² Solid Wire w/Interlock, 5.08 mm Centerline, Top Wire Entry
Color – Gray

UL Rating – 300 V, 24 A
12-30 AWG
20 A for field wiring applications

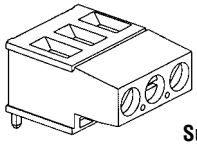

Suggested Screw Torque—
4.34 in.-lbs.

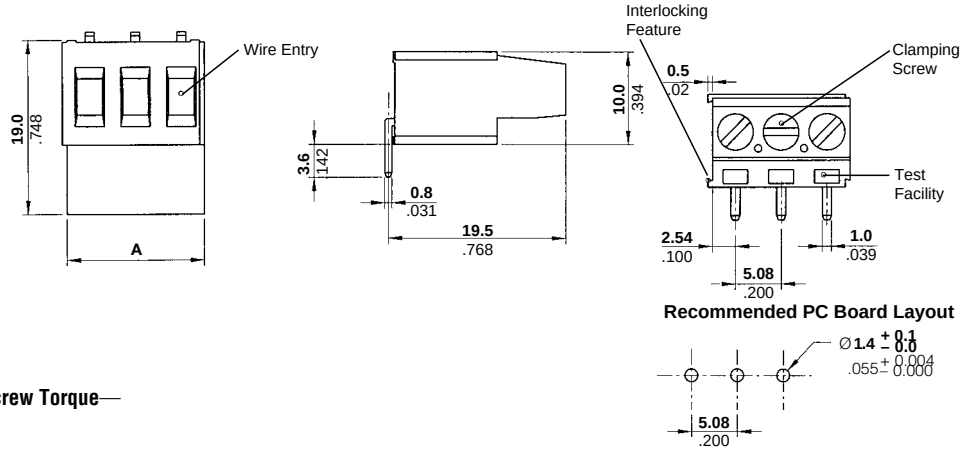

No. of Positions	Dim. A	Part Numbers
2	**10.16** [0.400]	282863-2
3	**15.24** [0.600]	282863-3
4	**20.32** [0.800]	282863-4
5	**25.40** [1.000]	282863-5
6	**30.48** [1.200]	282863-6
7	**35.56** [1.400]	282863-7
8	**40.64** [1.600]	282863-8
9	**45.72** [1.800]	282863-9
10	**50.80** [2.000]	1-282863-0
11	**55.88** [2.200]	1-282863-1
12	**60.96** [2.400]	1-282863-2
13	**66.04** [2.600]	1-282863-3

No. of Positions	Dim. A	Part Numbers
14	**71.12** [2.800]	1-282863-4
15	**76.20** [3.000]	1-282863-5
16	**81.28** [3.200]	1-282863-6
17	**86.36** [3.400]	1-282863-7
18	**91.44** [3.600]	1-282863-8
19	**96.52** [3.800]	1-282863-9
20	**101.60** [4.000]	2-282863-0
21	**106.68** [4.200]	2-282863-1
22	**111.76** [4.400]	2-282863-2
23	**116.84** [4.600]	2-282863-3
24	**121.92** [4.800]	2-282863-4
25	**127.00** [5.000]	2-282863-5

Products for Industrial & Commercial Applications

Dimensions are shown for reference purposes only.

Dimensions are in inches and millimeters unless otherwise specified. Values in brackets are metric equivalents.

Specifications subject to change.

Technical Support Center
1-800-522-6752
www.tycoelectronics.com

Board Mount, 35° Angled Wire Entry

UPDATED 11/01

Board Mount
2.5 mm² Solid Wire w/Interlock, 5.0 mm Centerline, 35° Angled Wire Entry

UL Rating – 300 V, 17.5 A
12-30 AWG
15 A for field wiring applications

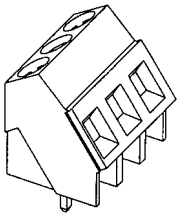

Suggested Screw Torque—
4.4 in.-lbs.

Notes:
1. BUCHANAN Terminal Block Series B04C4VXXT has been superceded/replaced with part number 796688-xx (blue color) and 796689-xx (black color).
2. RDI Terminal Block Series 5LEA-XX has been superceded/replaced with part number 796690-xx (green color).
3. RDI Terminal Block Series 5LEA-XX-1 has been superceded/replaced with part number 796689-xx (black color).

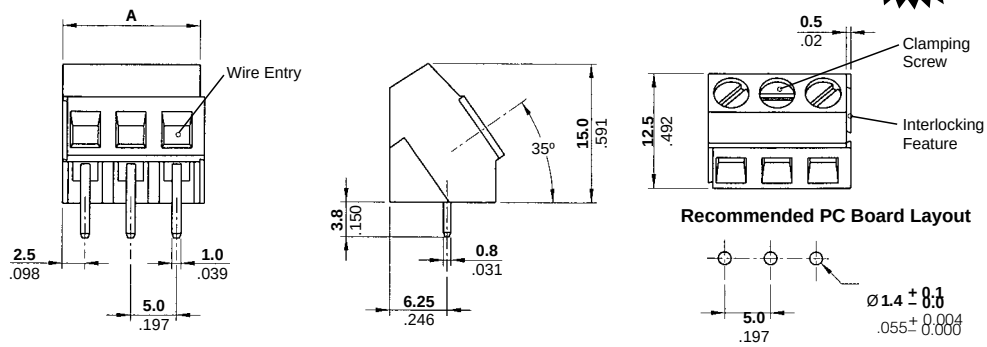

No. of Positions	Dim. A	Part Numbers			
		Gray	Blue	Black	Green
2	**10.0** [0.394]	282846-2	796688-2	796689-2	796690-2
3	**15.0** [0.591]	282846-3	796688-3	796689-3	796690-3
4	**20.0** [0.787]	282846-4	796688-4	796689-4	796690-4
5	**25.0** [0.984]	282846-5	796688-5	796689-5	796690-5
6	**30.0** [1.181]	282846-6	796688-6	796689-6	796690-6
7	**35.0** [1.378]	282846-7	796688-7	796689-7	796690-7
8	**40.0** [1.575]	282846-8	796688-8	796689-8	796690-8
9	**45.0** [1.772]	282846-9	796688-9	796689-9	796690-9
10	**50.0** [1.968]	1-282846-0	1-796688-0	1-796689-0	1-796690-0
11	**55.0** [2.165]	1-282846-1	1-796688-1	1-796689-1	1-796690-1
12	**60.0** [2.362]	1-282846-2	1-796688-2	1-796689-2	1-796690-2

Board Mount
2.5 mm² Solid Wire w/Interlock, 5.08 mm Centerline, 35° Angled Wire Entry
Color – Gray

UL Rating – 300 V, 17.5 A
12-30 AWG
15 A for field wiring applications

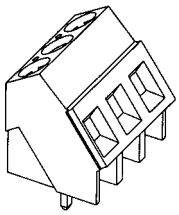

Suggested Screw Torque—
4.4 in.-lbs.

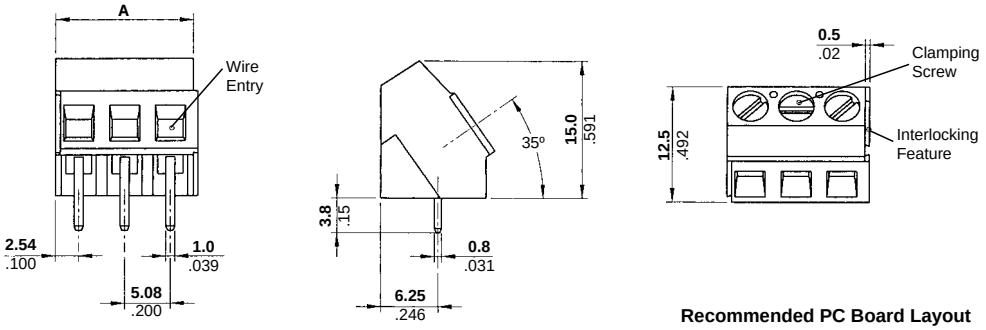

No. of Positions	Dim. A	Part Numbers
2	**10.16** [0.400]	282847-2
3	**15.24** [0.600]	282847-3
4	**20.32** [0.800]	282847-4
5	**25.40** [1.000]	282847-5
6	**30.48** [1.200]	282847-6
7	**35.56** [1.400]	282847-7
8	**40.64** [1.600]	282847-8
9	**45.72** [1.800]	282847-9
10	**50.80** [2.000]	1-282847-0
11	**55.88** [2.200]	1-282847-1
12	**60.96** [2.400]	1-282847-2

Note: RDI Terminal Block Series 2EEA-xx has been superceded/replaced with 282847-xx series.

For complete product information, order Catalog 1308389

Products for Industrial & Commercial Applications

Dimensions are shown for reference purposes only.

Dimensions are in inches and millimeters unless otherwise specified. Values in brackets are metric equivalents.

Specifications subject to change.

Technical Support Center
1-800-522-6752
www.tycoelectronics.com

High Current PCB Mount Terminal Blocks

Product Facts

- Available in (2) centerline spacings: 6.35 mm and 9.62 mm pitch
- (2) position sizes available: 2 and 3 position
- Wire range: 10-24 AWG
- Available in (3) wire entry configurations: side wire, top wire and 35° angle

- Cage clamp style termination
- Product is modular; designed with a dovetail feature to allow building larger position sizes to increase the number of available wire positions
- Green color; other colors available upon request



Board Mount
6.35 mm Centerline, Side Wire Entry w/Interlock
Color – Green

UL Rating – 300 V, 32 A
10-24 AWG

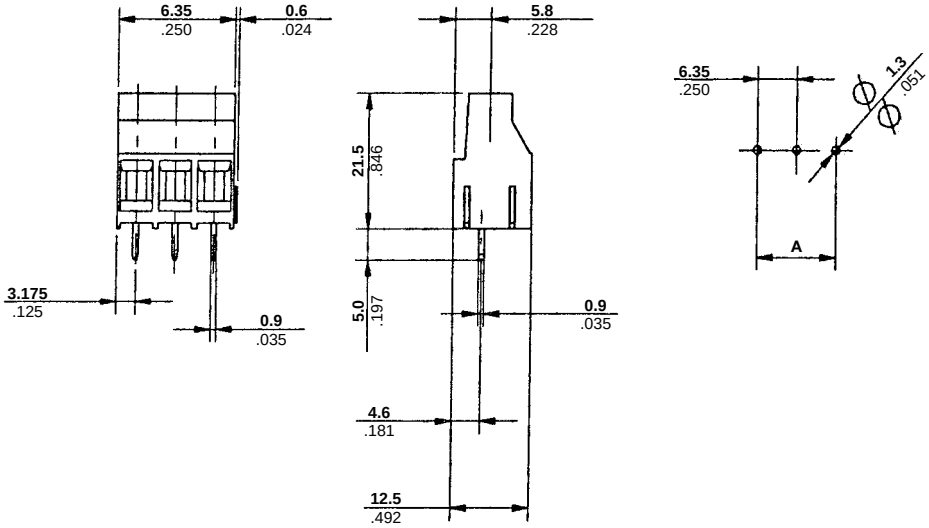

Suggested Screw Torque—
7.1 in.-lbs.

No. of Positions	Dim. A	Part Numbers
2	**6.35** [0.250]	796740-2
3	**12.70** [0.500]	796740-3

Board Mount
9.52 mm Centerline, Color – Green
Side Wire Entry w/Interlock

UL Rating – 600 V, 32 A
10-24 AWG

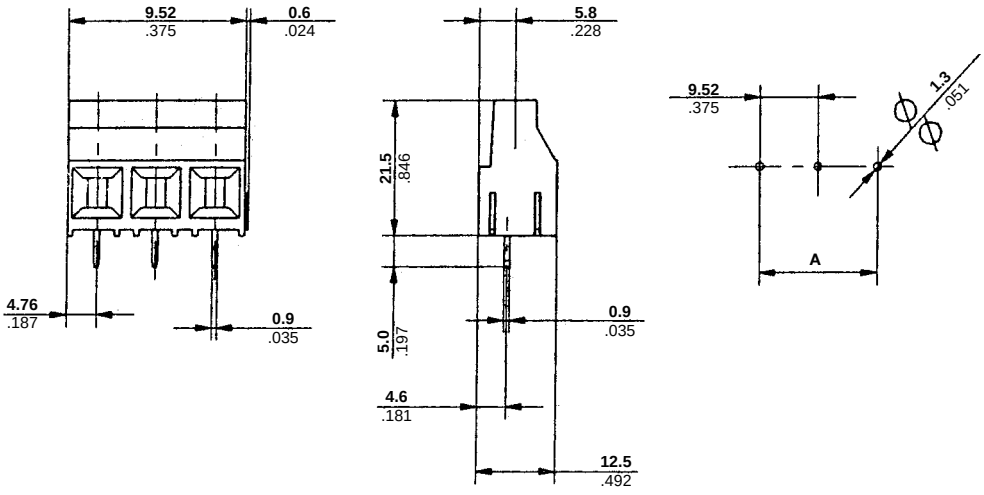

Suggested Screw Torque—
7.1 in.-lbs.

No. of Positions	Dim. A	Part Numbers
2	**9.52** [0.375]	796739-2
3	**19.04** [0.704]	796739-3

For complete product information, order Catalog 1308389

Products for Industrial & Commercial Applications

Dimensions are shown for reference purposes only.

Dimensions are in inches and millimeters unless otherwise specified. Values in brackets are metric equivalents.

Specifications subject to change.

Technical Support Center
1-800-522-6752
www.tycoelectronics.com

Board Mount, 1st and 2nd Level Stacking Connectors

Board Mount
1.5 mm² Solid Wire w/Interlock
5.0 mm Centerline,
1st and 2nd Level, Stacking
Color – Gray

UL Rating – 300 V, 13.5 A
16-30 AWG
10 A for field wiring applications

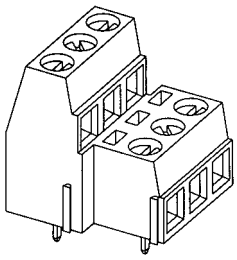

Suggested Screw Torque—
3.47 in.-lb.

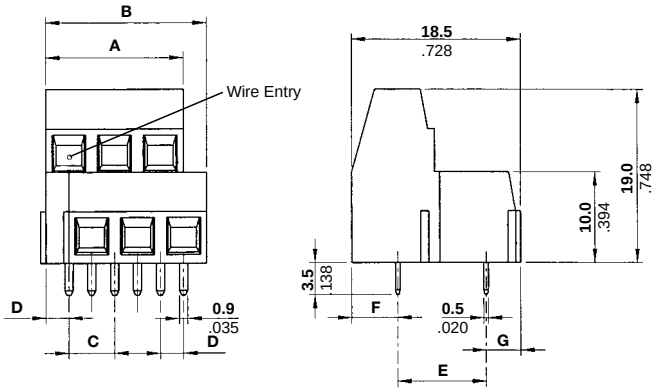

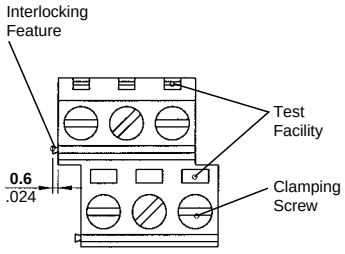

Recommended PC Board Layout

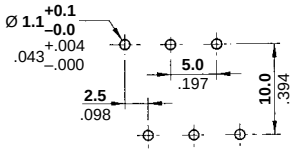

No. of Positions	Dimensions							Part Numbers
	A	B	C	D	E	F	G	
2	**10.0** .394	**12.5** .492	**5.0** .197	**2.5** .098	**10.0** .394	**4.4** .173	**4.1** .161	282868-2
3	**15.0** .591	**17.5** .689	**5.0** .197	**2.5** .098	**10.0** .394	**4.4** .173	**4.1** .161	282868-3

Board Mount
2.5 mm² Solid Wire w/Interlock
5.0 mm Centerline,
1st and 2nd Level, Stacking

UL Rating – 300 V, 17.5 A
12-30 AWG
15 A for field wiring applications

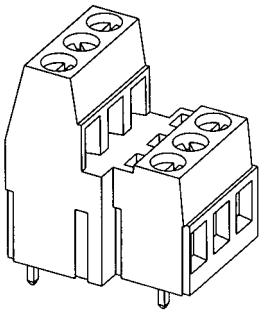

Suggested Screw Torque—
4.4 in.-lb.

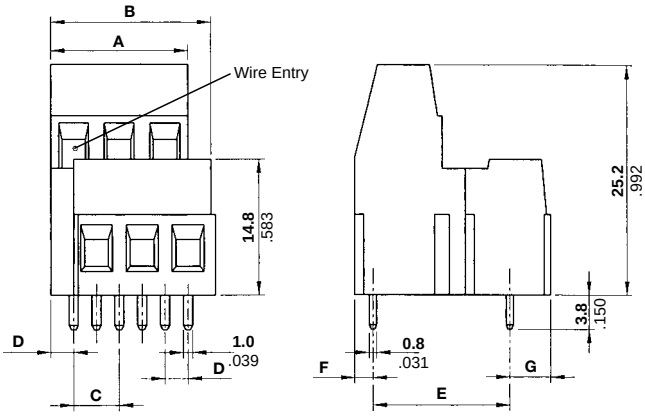

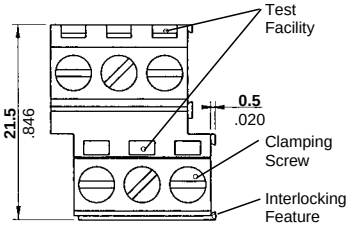

Recommended PC Board Layout

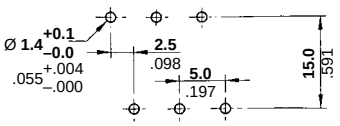

No. of Positions	Dimensions							Part Numbers	
	A	B	C	D	E	F	G	Gray	Blue
2	**10.0** .394	**12.5** .492	**5.0** .197	**2.5** .098	**15.0** .591	**2.0** .079	**4.5** .177	282888-2	796691-2
3	**15.0** .591	**17.5** .689	**5.0** .197	**2.5** .098	**15.0** .591	**2.0** .079	**4.5** .177	282888-3	796691-3
4	**20.0** .787	**22.5** .886	**5.0** .197	**2.5** .098	**15.0** .591	**2.0** .079	**4.5** .177	—	796691-4
5	**25.0** .984	**27.5** 1.083	**5.0** .197	**2.5** .098	**15.0** .591	**2.0** .079	**4.5** .177	—	796691-5
6	**30.0** 1.181	**32.5** 1.28	**5.0** .197	**2.5** .098	**15.0** .591	**2.0** .079	**4.5** .177	—	796691-6
7	**35.0** 1.378	**37.5** 1.476	**5.0** .197	**2.5** .098	**15.0** .591	**2.0** .079	**4.5** .177	—	796691-7
8	**40.0** 1.575	**42.5** 1.673	**5.0** .197	**2.5** .098	**15.0** .591	**2.0** .079	**4.5** .177	—	796691-8
9	**45.0** 1.772	**47.5** 1.87	**5.0** .197	**2.5** .098	**15.0** .591	**2.0** .079	**4.5** .177	—	796691-9
10	**50.0** 1.968	**52.5** 2.067	**5.0** .197	**2.5** .098	**15.0** .591	**2.0** .079	**4.5** .177	—	1-796691-0
11	**55.0** 2.165	**57.5** 2.264	**5.0** .197	**2.5** .098	**15.0** .591	**2.0** .079	**4.5** .177	—	1-796691-1
12	**60.0** 2.362	**62.5** 2.461	**5.0** .197	**2.5** .098	**15.0** .591	**2.0** .079	**4.5** .177	—	1-796691-2

Note: BUCHANAN Terminal Block Series BO7C4VXXT has been superceded/replaced with 796691-xx (blue). RDI Terminal Block Series 5LEEV-xx has been superceded/replaced with 796691-xx.

Board Mount, 1st and 2nd Level Stacking Connectors

Board Mount
4.0 mm² Solid Wire w/Interlock
5.0 mm Centerline,
1st and 2nd Level, Stacking
Color – Gray

UL Rating – 300 V, 24 A
12-30 AWG
20 A for field wiring applications

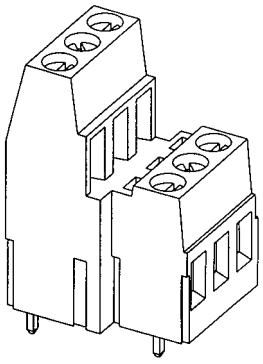

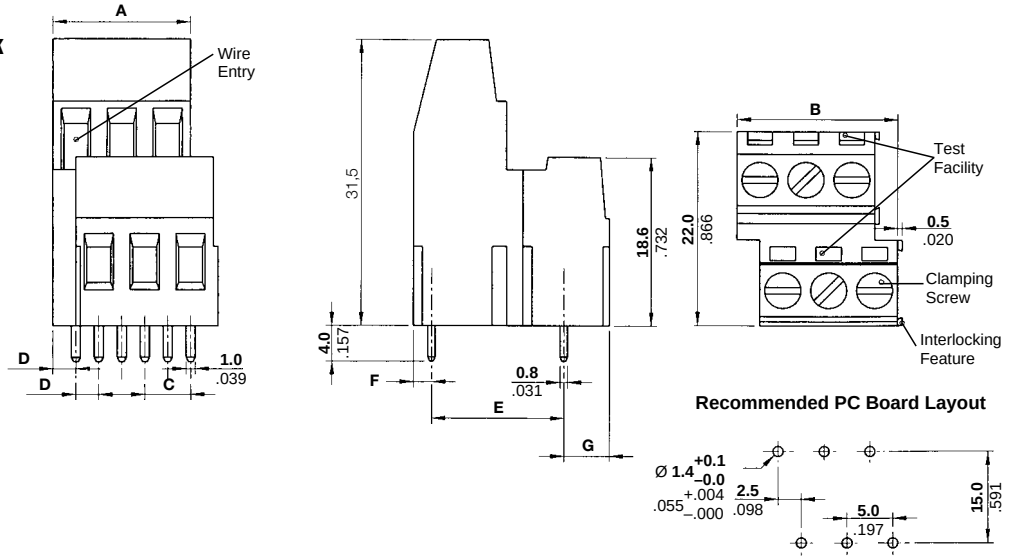

No. of Positions	Dimensions							Part Numbers
	A	B	C	D	E	F	G	
2	**10.0** .394	**12.5** .492	**5.0** .197	**2.5** .098	**15.0** .591	**2.0** .079	**5.0** .197	282908-2
3	**15.0** .591	**17.5** .689	**5.0** .197	**2.5** .098	**15.0** .591	**2.0** .079	**5.0** .197	282908-3

Suggested Screw Torque—
4.4 in.-lb.

Board Mount
1.5 mm² Solid Wire w/Interlock
5.08 mm Centerline,
1st and 2nd Level, Stacking
Color – Gray

UL Rating – 300 V, 13.5 A
16-30 AWG
10 A for field wiring applications

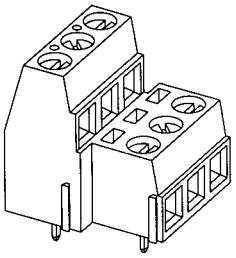

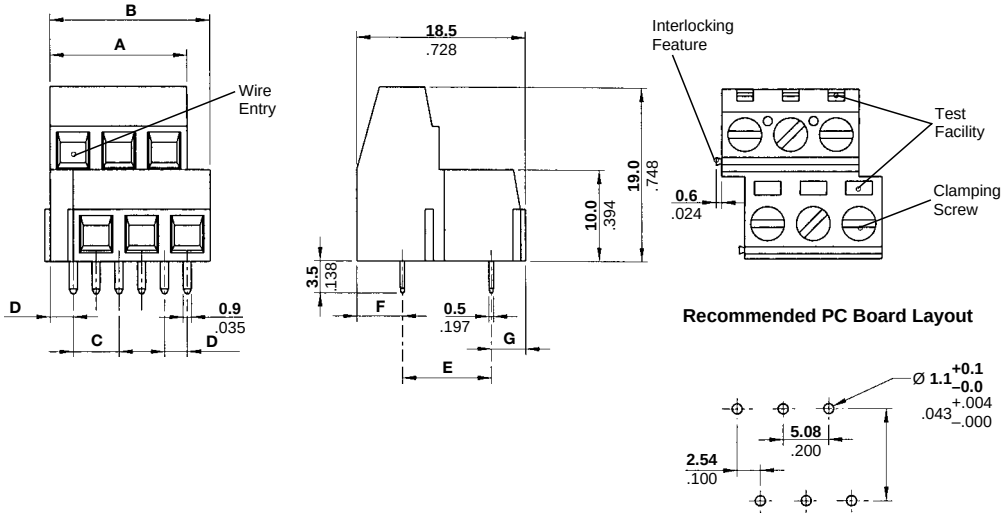

No. of Positions	Dimensions							Part Numbers
	A	B	C	D	E	F	G	
2	**10.16** .400	**12.70** .500	**5.08** .200	**2.54** .100	**10.16** .400	**4.24** .167	**4.1** .161	282869-2
3	**15.24** .600	**17.78** .700	**5.08** .200	**2.54** .100	**10.16** .400	**4.24** .167	**4.1** .161	282869-3

Suggested Screw Torque—
3.47 in.-lb.

For complete product information, order Catalog 1308389

Products for Industrial & Commercial Applications

Dimensions are shown for reference purposes only.

Dimensions are in inches and millimeters unless otherwise specified. Values in brackets are metric equivalents.

Specifications subject to change.

Technical Support Center
1-800-522-6752
www.tycoelectronics.com

Two-Piece Terminal Block Connectors

Open End Header
3.5 mm Centerline,
Color – Green
UL Rating – 150 V, 10 A

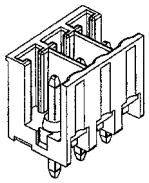

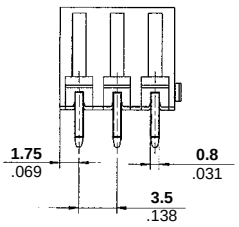

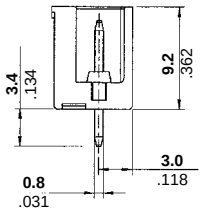

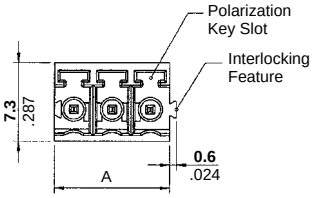

Recommended PC Board Layout

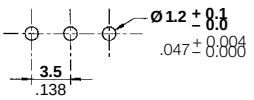

No. of Positions	Dim. A	Part Numbers
2	**7.0** [0.276]	284515-2
3	**10.5** [0.413]	284515-3
4	**14.0** [0.551]	284515-4
5	**17.5** [0.689]	284515-5
6	**21.0** [0.827]	284515-6
7	**24.5** [0.965]	284515-7
8	**28.0** [1.102]	284515-8
9	**31.5** [1.240]	284515-9
10	**35.0** [1.378]	1-284515-0
11	**38.5** [1.516]	1-284515-1
12	**42.0** [1.654]	1-284515-2
13	**45.5** [1.791]	1-284515-3

No. of Positions	Dim. A	Part Numbers
14	**49.0** [1.929]	1-284515-4
15	**52.5** [2.067]	1-284515-5
16	**56.0** [2.205]	1-284515-6
17	**59.5** [2.343]	1-284515-7
18	**63.0** [2.480]	1-284515-8
19	**66.5** [2.618]	1-284515-9
20	**70.0** [2.756]	2-284515-0
21	**73.5** [2.894]	2-284515-1
22	**77.0** [3.031]	2-284515-2
23	**80.5** [3.169]	2-284515-3
24	**84.0** [3.307]	2-284515-4
25	**87.5** [3.445]	2-284515-5

Straight, Closed End Header
3.5 mm Centerline,
Color – Green or Blue
UL Rating – 150 V, 10 A

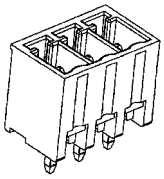

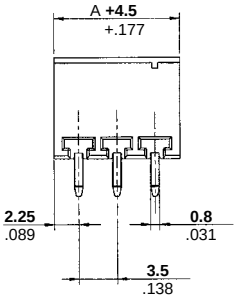

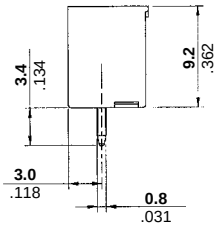

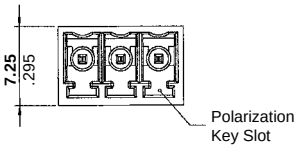

Recommended PC Board Layout

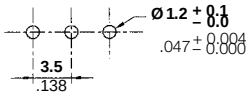

Number of Positions	Dim. A	Part Numbers	
		Green	Blue
2	**3.5** [0.138]	284514-2	796694-2
3	**7.0** [0.276]	284514-3	796694-3
4	**10.5** [0.413]	284514-4	796694-4
5	**14.0** [0.551]	284514-5	796694-5
6	**17.5** [0.689]	284514-6	796694-6
7	**21.0** [0.827]	284514-7	796694-7
8	**24.5** [0.965]	284514-8	796694-8
9	**28.0** [1.102]	284514-9	796694-9
10	**31.5** [1.240]	1-284514-0	1-796694-0
11	**35.0** [1.378]	1-284514-1	1-796694-1
12	**38.5** [1.516]	1-284514-2	1-796694-2
13	**42.0** [1.654]	1-284514-3	1-796694-3

Number of Positions	Dim. A	Part Numbers	
		Green	Blue
14	**45.5** [1.791]	1-284514-4	1-796694-4
15	**49.0** [1.929]	1-284514-5	1-796694-5
16	**52.5** [2.067]	1-284514-6	1-796694-6
17	**56.0** [2.205]	1-284514-7	1-796694-7
18	**59.5** [2.343]	1-284514-8	1-796694-8
19	**63.0** [2.480]	1-284514-9	1-796694-9
20	**66.5** [2.618]	2-284514-0	2-796694-0
21	**70.0** [2.756]	2-284514-1	2-796694-1
22	**73.5** [2.894]	2-284514-2	2-796694-2
23	**77.0** [3.031]	2-284514-3	2-796694-3
24	**80.5** [3.169]	2-284514-4	2-796694-4
25	**84.0** [3.307]	2-284514-5	2-796694-5

Note: BUCHANAN Terminal Block Series B73N3VxxT has been superceded/replaced with 796694-xx.
For complete product information, order Catalog 1308389

Products for Industrial & Commercial Applications

Dimensions are shown for reference purposes only.

Dimensions are in inches and millimeters unless otherwise specified. Values in brackets are metric equivalents.

Specifications subject to change.

Technical Support Center
1-800-522-6752
www.tycoelectronics.com

Two-Piece Terminal Block Connectors

Board Mount
Straight Open End Header, 3.81 mm Centerline, Color – Green

UL Rating – 150 V, 10 A

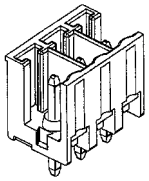

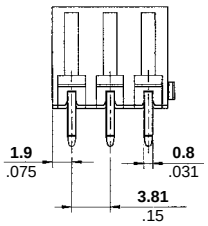

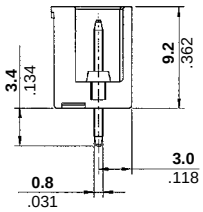

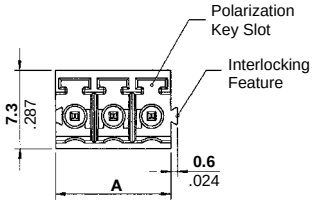

Recommended PC Board Layout

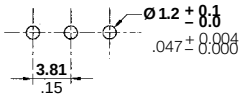

No. of Positions	Dim. A	Part Numbers
2	**7.62** [0.300]	284518-2
3	**11.43** [0.450]	284518-3
4	**15.24** [0.600]	284518-4
5	**19.05** [0.750]	284518-5
6	**22.86** [0.900]	284518-6
7	**26.67** [1.050]	284518-7
8	**30.48** [1.200]	284518-8
9	**34.29** [1.350]	284518-9
10	**38.10** [1.500]	1-284518-0
11	**41.91** [1.650]	1-284518-1
12	**45.72** [1.800]	1-284518-2
13	**49.53** [1.950]	1-284518-3

No. of Positions	Dim. A	Part Numbers
14	**53.34** [2.100]	1-284518-4
15	**57.15** [2.250]	1-284518-5
16	**60.96** [2.400]	1-284518-6
17	**64.77** [2.550]	1-284518-7
18	**68.58** [2.700]	1-284518-8
19	**72.39** [2.850]	1-284518-9
20	**76.20** [3.000]	2-284518-0
21	**80.01** [3.150]	2-284518-1
22	**83.82** [3.300]	2-284518-2
23	**87.63** [3.450]	2-284518-3
24	**91.44** [3.600]	2-284518-4
25	**95.25** [3.750]	2-284518-5

Straight Closed End Header, 3.81 mm Centerline Color – Green

UL Rating – 150 V, 10 A



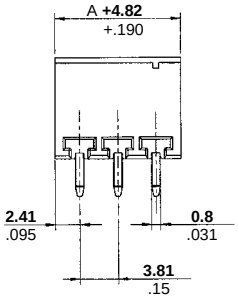

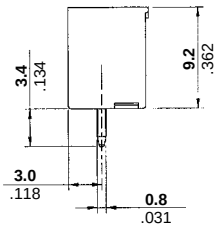

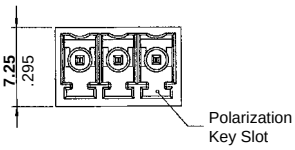

Recommended PC Board Layout

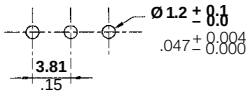

No. of Positions	Dim. A	Part Numbers
2	**3.81** [0.150]	284517-2
3	**7.62** [0.300]	284517-3
4	**11.43** [0.450]	284517-4
5	**15.24** [0.600]	284517-5
6	**19.05** [0.750]	284517-6
7	**22.86** [0.900]	284517-7
8	**26.67** [1.050]	284517-8
9	**30.48** [1.200]	284517-9
10	**34.29** [1.350]	1-284517-0
11	**38.10** [1.500]	1-284517-1
12	**41.91** [1.650]	1-284517-2
13	**45.72** [1.800]	1-284517-3

No. of Positions	Dim. A	Part Numbers
14	**53.34** [2.100]	1-284517-4
15	**57.15** [2.250]	1-284517-5
16	**60.96** [2.400]	1-284517-6
17	**64.77** [2.550]	1-284517-7
18	**68.58** [2.700]	1-284517-8
19	**72.39** [2.850]	1-284517-9
20	**76.20** [3.000]	2-284517-0
21	**80.01** [3.150]	2-284517-1
22	**83.82** [3.300]	2-284517-2
23	**87.63** [3.450]	2-284517-3
24	**91.44** [3.600]	2-284517-4
25	**95.25** [3.750]	2-284517-5

For complete product information, order Catalog 1308389

Products for Industrial & Commercial Applications

Dimensions are shown for reference purposes only.

Dimensions are in inches and millimeters unless otherwise specified. Values in brackets are metric equivalents.

Specifications subject to change.

Technical Support Center
1-800-522-6752
www.tycoelectronics.com

Two-Piece Terminal Block Connectors

Straight Header w/Threaded Flange, 3.5 mm Centerline, Color – Green

UL Rating – 150 V, 10 A

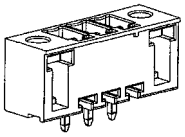

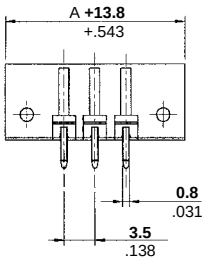

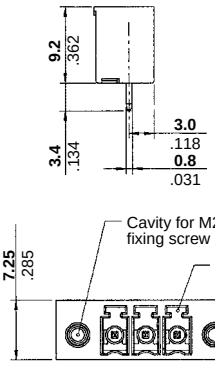

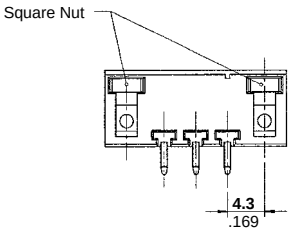

Recommended PC Board Layout

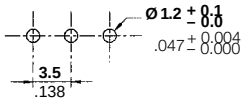

No. of Positions	Dim. A	Part Numbers
2	**3.5** [0.138]	284516-2
3	**7.0** [0.276]	284516-3
4	**10.5** [0.413]	284516-4
5	**14.0** [0.551]	284516-5
6	**17.5** [0.689]	284516-6
7	**21.0** [0.827]	284516-7
8	**24.5** [0.965]	284516-8
9	**28.0** [1.102]	284516-9
10	**31.5** [1.240]	1-284516-0
11	**35.0** [1.378]	1-284516-1
12	**38.5** [1.516]	1-284516-2

No. of Positions	Dim. A	Part Numbers
13	**42.0** [1.654]	1-284516-3
14	**45.5** [1.791]	1-284516-4
15	**49.0** [1.929]	1-284516-5
16	**52.5** [2.067]	1-284516-6
17	**56.0** [2.205]	1-284516-7
18	**59.5** [2.343]	1-284516-8
19	**63.0** [2.480]	1-284516-9
20	**66.5** [2.618]	2-284516-0
21	**70.0** [2.756]	2-284516-1
22	**73.5** [2.894]	2-284516-2
23	**77.0** [3.031]	2-284516-3

Straight Header w/Threaded Flange, 3.81 mm Centerline, Color – Green

UL Rating – 150 V, 10 A

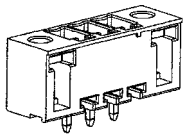

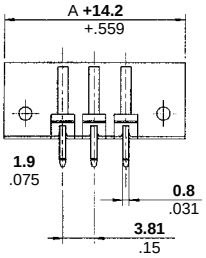

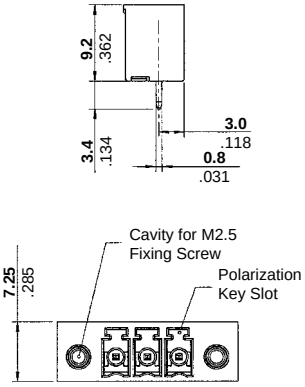

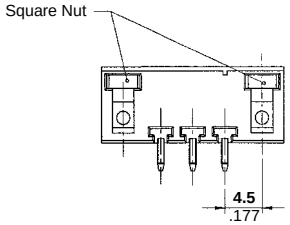

Recommended PC Board Layout

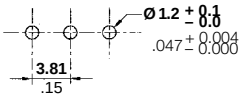

No. of Positions	Dim. A	Part Numbers
2	**3.81** [0.150]	284519-2
3	**7.62** [0.300]	284519-3
4	**11.43** [0.450]	284519-4
5	**15.24** [0.600]	284519-5
6	**19.05** [0.750]	284519-6
7	**22.86** [0.900]	284519-7
8	**26.67** [1.050]	284519-8
9	**30.48** [1.200]	284519-9
10	**34.29** [1.350]	1-284519-0
11	**38.10** [1.500]	1-284519-1
12	**41.91** [1.650]	1-284519-2

No. of Positions	Dim. A	Part Numbers
13	**45.72** [1.800]	1-284519-3
14	**49.53** [1.950]	1-284519-4
15	**53.34** [2.100]	1-284519-5
16	**57.15** [2.250]	1-284519-6
17	**60.96** [2.400]	1-284519-7
18	**64.77** [2.550]	1-284519-8
19	**68.58** [2.700]	1-284519-9
20	**72.39** [2.850]	2-284519-0
21	**76.20** [3.000]	2-284519-1
22	**80.01** [3.150]	2-284519-2
23	**83.82** [3.300]	2-284519-3

For complete product information, order Catalog 1308389

Products for Industrial & Commercial Applications

Dimensions are shown for reference purposes only.

Dimensions are in inches and millimeters unless otherwise specified. Values in brackets are metric equivalents.

Specifications subject to change.

Technical Support Center
1-800-522-6752
www.tycoelectronics.com

Two-Piece Terminal Block Connectors

Straight Header w/Locking Screw Flange, 5.0 mm Centerline, Color – Green

UL Rating – 300 V, 12 A

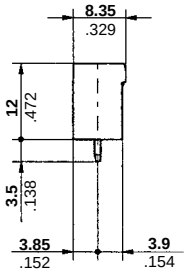

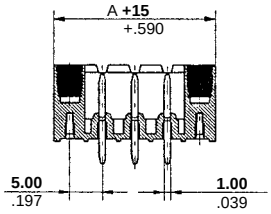

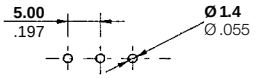

No. of Positions	Dim. A	Part Numbers
2	**5.0** [0.197]	796865-2
3	**10.0** [0.394]	796865-3
4	**15.0** [0.591]	796865-4
5	**20.0** [0.787]	796865-5
6	**25.0** [0.984]	796865-6
7	**30.0** [1.181]	796865-7
8	**35.0** [1.378]	796865-8

Straight Header w/Locking Screw Flange, 5.08 mm Centerline, Color – Green

UL Rating – 300 V, 12 A

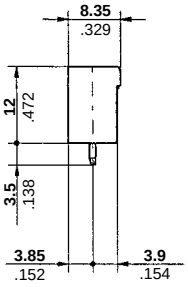

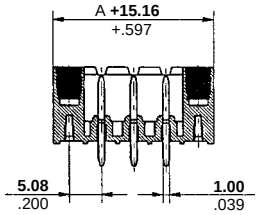

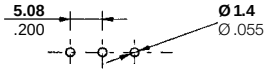

No. of Positions	Dim. A	Part Numbers
2	**5.08** [0.200]	796867-2
3	**10.16** [0.400]	796867-3
4	**15.24** [0.600]	796867-4
5	**20.32** [0.800]	796867-5
6	**25.40** [1.000]	796867-6
7	**30.48** [1.200]	796867-7
8	**35.56** [1.400]	796867-8
9	**40.64** [1.600]	796867-9
10	**45.72** [1.800]	1-796867-0
11	**50.80** [2.000]	1-796867-1
12	**55.88** [2.200]	1-796867-2

No. of Positions	Dim. A	Part Numbers
13	**60.96** [2.400]	1-796867-3
14	**66.04** [2.600]	1-796867-4
15	**71.12** [2.800]	1-796867-5
16	**76.20** [3.000]	1-796867-6
17	**81.28** [3.200]	1-796867-7
18	**86.36** [3.400]	1-796867-8
19	**91.44** [3.600]	1-796867-9
20	**96.52** [3.800]	2-796867-0
21	**101.60** [4.000]	2-796867-1
22	**106.68** [4.200]	2-796867-2
23	**111.76** [4.400]	2-796867-3

For complete product information, order Catalog 1308389

Products for Industrial & Commercial Applications

Dimensions are shown for reference purposes only.

Dimensions are in inches and millimeters unless otherwise specified. Values in brackets are metric equivalents.

Specifications subject to change.

Technical Support Center
1-800-522-6752
www.tycoelectronics.com

Two-Piece Terminal Block Connectors

Right-Angle Open End Header w/Interlock, 3.5 mm Centerline Color – Green

UL Rating – 150 V, 10 A

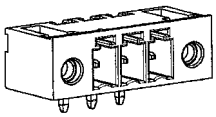

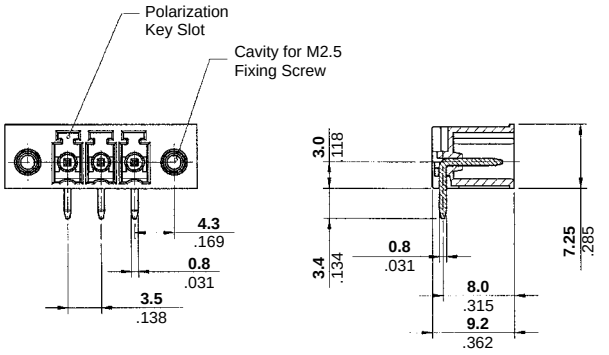

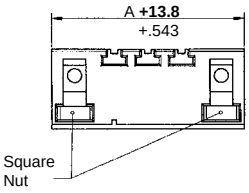

Recommended PC Board Layout

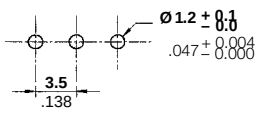

No. of Positions	Dim. A	Part Numbers
2	**3.5** [0.138]	284539-2
3	**7.0** [0.276]	284539-3
4	**10.5** [0.413]	284539-4
5	**14.0** [0.551]	284539-5
6	**17.5** [0.689]	284539-6
7	**21.0** [0.827]	284539-7
8	**24.5** [0.965]	284539-8
9	**28.0** [1.102]	284539-9
10	**31.5** [1.240]	1-284539-0
11	**35.0** [1.378]	1-284539-1
12	**38.5** [1.516]	1-284539-2

No. of Positions	Dim. A	Part Numbers
13	**42.0** [1.654]	1-284539-3
14	**45.5** [1.791]	1-284539-4
15	**49.0** [1.929]	1-284539-5
16	**52.5** [2.067]	1-284539-6
17	**56.0** [2.205]	1-284539-7
18	**59.5** [2.343]	1-284539-8
19	**63.0** [2.480]	1-284539-9
20	**66.5** [2.618]	2-284539-0
21	**70.0** [2.756]	2-284539-1
22	**73.5** [2.894]	2-284539-2
23	**77.0** [3.031]	2-284539-3

Right-Angle Closed End Header w/Threaded Flange, 3.81 mm Centerline Color – Green

UL Rating – 150 V, 10 A

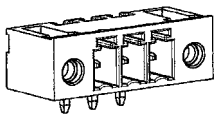

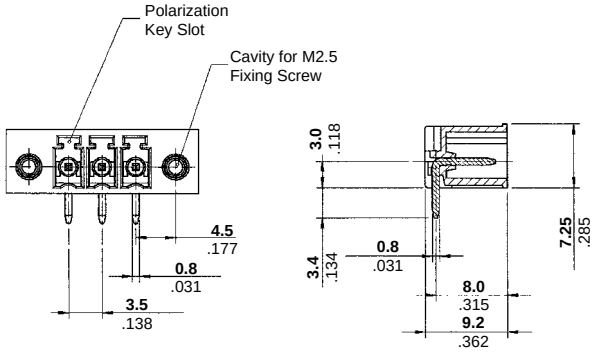

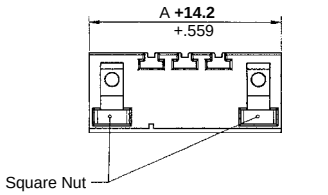

Recommended PC Board Layout

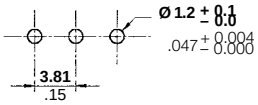

No. of Positions	Dim. A	Part Numbers
2	**3.81** [0.150]	284541-2
3	**7.62** [0.300]	284541-3
4	**11.43** [0.450]	284541-4
5	**15.24** [0.600]	284541-5
6	**19.05** [0.750]	284541-6
7	**22.86** [0.900]	284541-7
8	**26.67** [1.050]	284541-8
9	**30.48** [1.200]	284541-9
10	**34.29** [1.350]	1-284541-0
11	**38.10** [1.500]	1-284541-1
12	**41.91** [1.650]	1-284541-2

No. of Positions	Dim. A	Part Numbers
13	**45.72** [1.800]	1-284541-3
14	**49.53** [1.950]	1-284541-4
15	**53.34** [2.100]	1-284541-5
16	**57.15** [2.250]	1-284541-6
17	**60.96** [2.400]	1-284541-7
18	**64.77** [2.550]	1-284541-8
19	**68.58** [2.700]	1-284541-9
20	**72.39** [2.850]	2-284541-0
21	**76.20** [3.000]	2-284541-1
22	**80.01** [3.150]	2-284541-2
23	**83.82** [3.300]	2-284541-3

For complete product information, order Catalog 1308389

Products for Industrial & Commercial Applications

Dimensions are shown for reference purposes only.

Dimensions are in inches and millimeters unless otherwise specified. Values in brackets are metric equivalents.

Specifications subject to change.

Technical Support Center
1-800-522-6752
www.tycoelectronics.com

Two-Piece Terminal Block Connectors

Straight, Open End Stacking Headers, 5.0 mm Centerline Color – See chart.

UL Rating – 300 V, 12 A

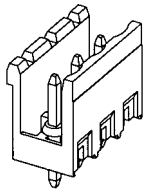

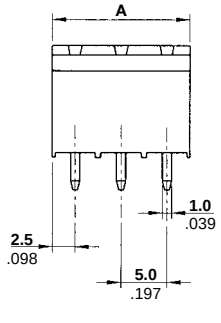

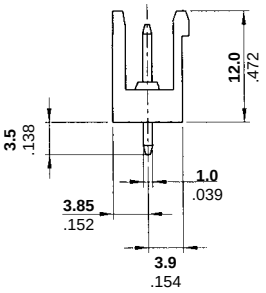

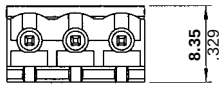

Recommended PC Board Layout

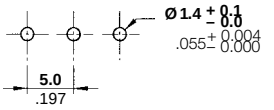

No. of Positions	Dim. A	Part Numbers	
		Gray	Blue
2	**10.0** [0.394]	282822-2	796697-2
3	**15.0** [0.591]	282822-3	796697-3
4	**20.0** [0.787]	282822-4	796697-4
5	**25.0** [0.984]	282822-5	796697-5
6	**30.0** [1.181]	282822-6	796697-6
7	**35.0** [1.378]	282822-7	796697-7
8	**40.0** [1.575]	282822-8	796697-8
9	**45.0** [1.772]	282822-9	796697-9
10	**50.0** [1.968]	1-282822-0	1-796697-0
11	**55.0** [2.165]	1-282822-1	1-796697-1
12	**60.0** [2.362]	1-282822-2	1-796697-2
13	**65.0** [2.559]	1-282822-3	1-796697-3

No. of Positions	Dim. A	Part Numbers	
		Gray	Blue
14	**70.0** [2.756]	1-282822-4	1-796697-4
15	**75.0** [2.953]	1-282822-5	1-796697-5
16	**80.0** [3.150]	1-282822-6	1-796697-6
17	**85.0** [3.346]	1-282822-7	1-796697-7
18	**90.0** [3.543]	1-282822-8	1-796697-8
19	**95.0** [3.740]	1-282822-9	1-796697-9
20	**100.0** [3.937]	2-282822-0	2-796697-0
21	**105.0** [4.134]	2-282822-1	2-796697-1
22	**110.0** [4.331]	2-282822-2	2-796697-2
23	**115.0** [4.528]	2-282822-3	2-796697-3
24	**120.0** [4.724]	2-282822-4	2-796697-4
25	**125.0** [4.921]	2-282822-5	2-796697-5

Note: BUCHANAN Terminal Block Series B72N4VxxT has been replaced by x-796697-x (blue).

Straight, Closed End Headers, 5.0 mm Centerline Color – See chart.

UL Rating – 300 V, 12 A

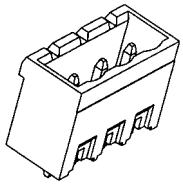

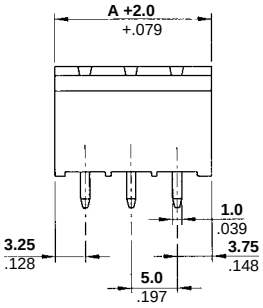

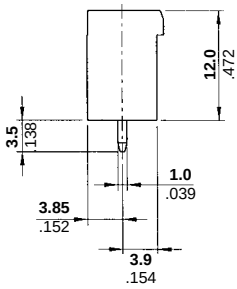

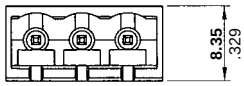

Recommended PC Board Layout

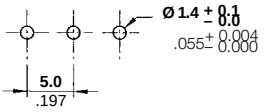

No. of Positions	Dim. A	Part Numbers			
		Gray	Green	Blue	Black
2	**10.0** [0.394]	282820-2	796642-2	796699-2	796643-2
3	**15.0** [0.591]	282820-3	796642-3	796699-3	796643-3
4	**20.0** [0.787]	282820-4	796642-4	796699-4	796643-4
5	**25.0** [0.984]	282820-5	796642-5	796699-5	796643-5
6	**30.0** [1.181]	282820-6	796642-6	796699-6	796643-6
7	**35.0** [1.378]	282820-7	796642-7	796699-7	796643-7
8	**40.0** [1.575]	282820-8	796642-8	796699-8	796643-8
9	**45.0** [1.772]	282820-9	796642-9	796699-9	796643-9
10	**50.0** [1.968]	1-282820-0	1-796642-0	1-796699-0	1-796643-0
11	**55.0** [2.165]	1-282820-1	1-796642-1	1-796699-1	1-796643-1
12	**60.0** [2.362]	1-282820-2	1-796642-2	1-796699-2	1-796643-2
13	**65.0** [2.559]	1-282820-3	1-796642-3	1-796699-3	1-796643-3

No. of Positions	Dim. A	Part Numbers			
		Gray	Green	Blue	Black
14	**70.0** [2.756]	1-282820-4	1-796642-4	1-796699-4	1-796643-4
15	**75.0** [2.953]	1-282820-5	1-796642-5	1-796699-5	1-796643-5
16	**80.0** [3.150]	1-282820-6	1-796642-6	1-796699-6	1-796643-6
17	**85.0** [3.346]	1-282820-7	1-796642-7	1-796699-7	1-796643-7
18	**90.0** [3.543]	1-282820-8	1-796642-8	1-796699-8	1-796643-8
19	**95.0** [3.740]	1-282820-9	1-796642-9	1-796699-9	1-796643-9
20	**100.0** [3.937]	2-282820-0	2-796642-0	2-796699-0	2-796643-0
21	**105.0** [4.134]	2-282820-1	2-796642-1	2-796699-1	2-796643-1
22	**110.0** [4.331]	2-282820-2	2-796642-2	2-796699-2	2-796643-2
23	**115.0** [4.528]	2-282820-3	2-796642-3	2-796699-3	2-796643-3
24	**120.0** [4.724]	2-282820-4	2-796642-4	2-796699-4	2-796643-4
25	**125.0** [4.921]	2-282820-5	2-796642-5	2-796699-5	2-796643-5

Note: BUCHANAN Terminal Block Series B73N4VxxT has been replaced with 796699-xx (blue) and 796643-xx (black).
RDI Terminal Block Series 2EHDV-xx has been replaced with 796642-xx (green) and 796643-xx (black).

Products for Industrial & Commercial Applications

Dimensions are shown for reference purposes only.

Dimensions are in inches and millimeters unless otherwise specified. Values in brackets are metric equivalents.

Specifications subject to change.

Technical Support Center
1-800-522-6752
www.tycoelectronics.com

Two-Piece Terminal Block Connectors

Straight, Open End Stacking Headers, 5.08 mm Centerline
Color – Gray
UL Rating – 300 V, 12 A

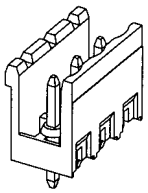

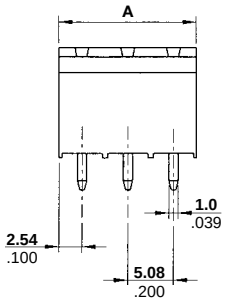

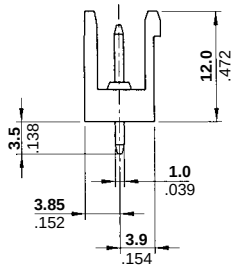

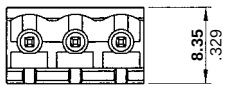

Recommended PC Board Layout

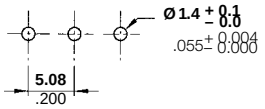

No. of Positions	Dim. A	Part Numbers
2	**10.16** [0.400]	282825-2
3	**15.24** [0.600]	282825-3
4	**20.32** [0.800]	282825-4
5	**25.40** [1.000]	282825-5
6	**30.48** [1.200]	282825-6
7	**35.56** [1.400]	282825-7
8	**40.64** [1.600]	282825-8
9	**45.72** [1.800]	282825-9
10	**50.80** [2.000]	1-282825-0
11	**55.88** [2.200]	1-282825-1
12	**60.96** [2.400]	1-282825-2
13	**66.04** [2.600]	1-282825-3

No. of Positions	Dim. A	Part Numbers
14	**71.12** [2.800]	1-282825-4
15	**76.20** [3.000]	1-282825-5
16	**81.28** [3.200]	1-282825-6
17	**86.36** [3.400]	1-282825-7
18	**91.44** [3.600]	1-282825-8
19	**96.52** [3.800]	1-282825-9
20	**101.60** [4.000]	2-282825-0
21	**106.68** [4.200]	2-282825-1
22	**111.76** [4.400]	2-282825-2
23	**116.84** [4.600]	2-282825-3
24	**121.92** [4.800]	2-282825-4
25	**127.00** [5.000]	2-282825-5

Straight, Closed End Headers, 5.08 mm Centerline,
Color – See chart.
UL Rating – 300 V, 12 A

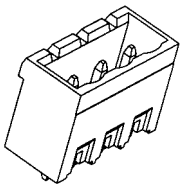

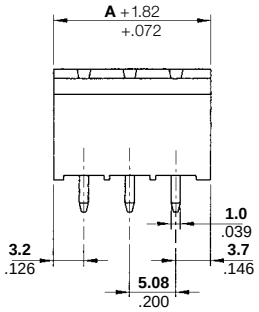

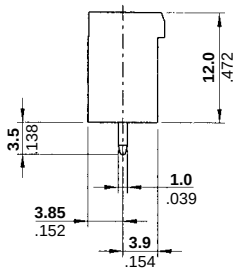

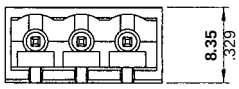

Recommended PC Board Layout

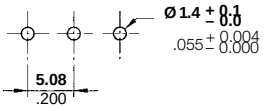

No. of Positions	Dim. A	Part Numbers		
		Gray	Green	Black
2	**10.16** [0.400]	282823-2 *	796636-2	796637-2
3	**15.24** [0.600]	282823-3 *	796636-3	796637-3
4	**20.32** [0.800]	282823-4 *	796636-4	796637-4
5	**25.40** [1.000]	282823-5 *	796636-5	796637-5
6	**30.48** [1.200]	282823-6 *	796636-6	796637-6
7	**35.56** [1.400]	282823-7 *	796636-7	796637-7
8	**40.64** [1.600]	282823-8 *	796636-8	796637-8
9	**45.72** [1.800]	282823-9 *	796636-9	796637-9
10	**50.80** [2.000]	1-282823-0 *	1-796636-0	1-796637-0
11	**55.88** [2.200]	1-282823-1 *	1-796636-1	1-796637-1
12	**60.96** [2.400]	1-282823-2 *	1-796636-2	1-796637-2
13	**66.04** [2.600]	1-282823-3 *	1-796636-3	1-796637-3

No. of Positions	Dim. A	Part Numbers		
		Gray	Green	Black
14	**71.12** [2.800]	1-282823-4	1-796636-4	1-796637-4
15	**76.20** [3.000]	1-282823-5	1-796636-5	1-796637-5
16	**81.28** [3.200]	1-282823-6	1-796636-6	1-796637-6
17	**86.36** [3.400]	1-282823-7	1-796636-7	1-796637-7
18	**91.44** [3.600]	1-282823-8	1-796636-8	1-796637-8
19	**96.52** [3.800]	1-282823-9	1-796636-9	1-796637-9
20	**101.60** [4.000]	2-282823-0	2-796636-0	2-796637-0
21	**106.68** [4.200]	2-282823-1	2-796636-1	2-796637-1
22	**111.76** [4.400]	2-282823-2	2-796636-2	2-796637-2
23	**116.84** [4.600]	2-282823-3	2-796636-3	2-796637-3
24	**121.92** [4.800]	2-282823-4	2-796636-4	2-796637-4
25	**127.00** [5.000]	2-282823-5	2-796636-5	2-796637-5

Note: BUCHANAN Terminal Block Series B2EHDVXX has been superceded/replaced with 796636-xx (green) and 796637-xx (black).
For complete product information, order Catalog 1308389

Products for Industrial & Commercial Applications

Dimensions are shown for reference purposes only.

Dimensions are in inches and millimeters unless otherwise specified. Values in brackets are metric equivalents.

Specifications subject to change.

Technical Support Center
1-800-522-6752
www.tycoelectronics.com

Two-Piece Terminal Block Connectors

Right-Angle Open End Header w/Interlock, 3.5 mm Centerline Color – Green

UL Rating – 150 V, 10 A

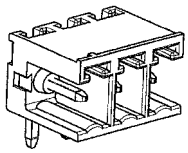

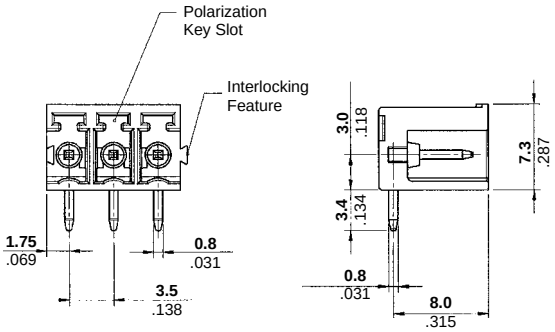

Recommended PC Board Layout

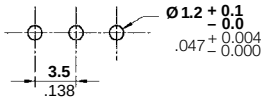

No. of Positions	Dim. A	Part Numbers
2	**7.0** [0.276]	284540-2
3	**10.5** [0.413]	284540-3
4	**14.0** [0.551]	284540-4
5	**17.5** [0.689]	284540-5
6	**21.0** [0.827]	284540-6
7	**24.5** [0.965]	284540-7
8	**28.0** [1.102]	284540-8
9	**31.5** [1.240]	284510-9
10	**35.0** [1.378]	1-284540-0
11	**38.5** [1.516]	1-284540-1
12	**42.0** [1.654]	1-284540-2
13	**45.5** [1.791]	1-284540-3

No. of Positions	Dim. A	Part Numbers
14	**49.0** [1.929]	1-284540-4
15	**52.5** [2.067]	1-284540-5
16	**56.0** [2.205]	1-284540-6
17	**59.5** [2.343]	1-284540-7
18	**63.0** [2.480]	1-284540-8
19	**66.5** [2.618]	1-284540-9
20	**70.0** [2.756]	2-284540-0
21	**73.5** [2.894]	2-284540-1
22	**77.0** [3.031]	2-284540-2
23	**80.5** [3.169]	2-284540-3
24	**84.0** [3.307]	2-284540-4
25	**87.5** [3.445]	2-284540-5

Right-Angle Closed End Headers, 3.5 mm Centerline With Threaded Flange Color – See chart.

UL Rating – 150 V, 10 A

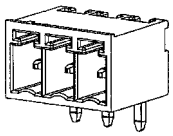

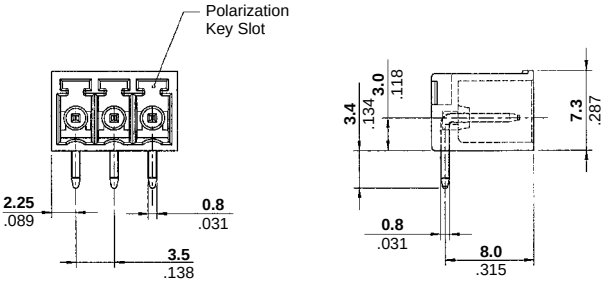

Recommended PC Board Layout

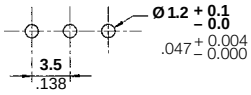

Number of Positions	Dim. A	Part Numbers	
		Green	Blue
2	**3.5** [0.138]	284512-2	796695-2
3	**7.0** [0.276]	284512-3	796695-3
4	**10.5** [0.413]	284512-4	796695-4
5	**14.0** [0.551]	284512-5	796695-5
6	**17.5** [0.689]	284512-6	796695-6
7	**21.0** [0.827]	284512-7	796695-7
8	**24.5** [0.965]	284512-8	796695-8
9	**28.0** [1.102]	284512-9	796695-9
10	**31.5** [1.240]	1-284512-0	1-796695-0
11	**35.0** [1.378]	1-284512-1	1-796695-1
12	**38.5** [1.516]	1-284512-2	1-796695-2
13	**42.0** [1.654]	1-284512-3	1-796695-3

Number of Positions	Dim. A	Part Numbers	
		Green	Blue
14	**45.5** [1.791]	1-284512-4	1-796695-4
15	**49.0** [1.929]	1-284512-5	1-796695-5
16	**52.5** [2.067]	1-284512-6	1-796695-6
17	**56.0** [2.205]	1-284512-7	1-796695-7
18	**59.5** [2.343]	1-284512-8	1-796695-8
19	**63.0** [2.480]	1-284512-9	1-796695-9
20	**66.5** [2.618]	2-284512-0	2-796695-0
21	**70.0** [2.756]	2-284512-1	2-796695-1
22	**73.5** [2.894]	2-284512-2	2-796695-2
23	**77.0** [3.031]	2-284512-3	2-796695-3
24	**80.5** [3.169]	2-284512-4	2-796695-4
25	**84.0** [3.307]	2-284512-5	2-796695-5

Note: BUCHANAN Terminal Block Series B73N3HXXT has been replaced with Part Number 796695-xx (blue).

For complete product information, order Catalog 1308389

Products for Industrial & Commercial Applications

Dimensions are shown for reference purposes only.

Dimensions are in inches and millimeters unless otherwise specified. Values in brackets are metric equivalents.

Specifications subject to change.

Technical Support Center
1-800-522-6752
www.tycoelectronics.com

Two-Piece Terminal Block Connectors

Right-Angle Open End Header w/Interlock, 3.81 mm Centerline, Color – Green

UL Rating – 150 V, 10 A

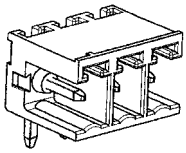

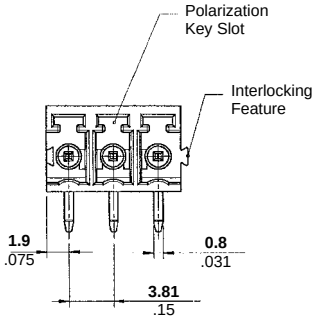

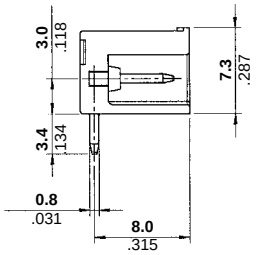

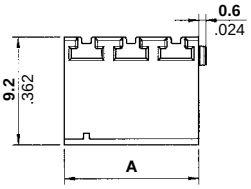

Recommended PC Board Layout

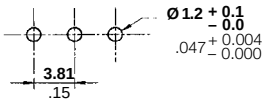

No. of Positions	Dim. A	Part Numbers
2	**7.62** [0.300]	284542-2
3	**11.43** [0.450]	284542-3
4	**15.24** [0.600]	284542-4
5	**19.05** [0.750]	284542-5
6	**22.86** [0.900]	284542-6
7	**26.67** [1.050]	284542-7
8	**30.48** [1.200]	284542-8
9	**34.29** [1.350]	284542-9
10	**38.10** [1.500]	1-284542-0
11	**41.91** [1.650]	1-284542-1
12	**45.72** [1.800]	1-284542-2
13	**49.53** [1.950]	1-284542-3

No. of Positions	Dim. A	Part Numbers
14	**53.34** [2.100]	1-284542-4
15	**57.15** [2.250]	1-284542-5
16	**60.96** [2.400]	1-284542-6
17	**64.77** [2.550]	1-284542-7
18	**68.58** [2.700]	1-284542-8
19	**72.39** [2.850]	1-284542-9
20	**76.20** [3.000]	2-284542-0
21	**80.01** [3.150]	2-284542-1
22	**83.82** [3.300]	2-284542-2
23	**87.63** [3.450]	2-284542-3
24	**91.44** [3.600]	2-284542-4
25	**95.25** [3.750]	2-284542-5

Right-Angle Closed End Header, 3.81 mm Centerline Color – Green

UL Rating – 150 V, 10 A

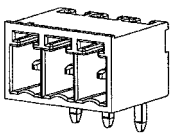

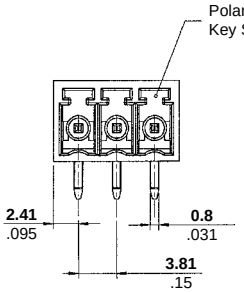

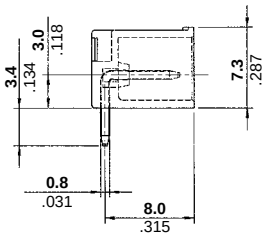

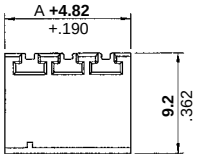

Recommended PC Board Layout

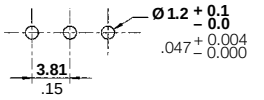

No. of Positions	Dim. A	Part Numbers
2	**3.81** [0.150]	284513-2
3	**7.62** [0.300]	284513-3
4	**11.43** [0.450]	284513-4
5	**15.24** [0.600]	284513-5
6	**19.05** [0.750]	284513-6
7	**22.86** [0.900]	284513-7
8	**26.67** [1.050]	284513-8
9	**30.48** [1.200]	284513-9
10	**34.29** [1.350]	1-284513-0
11	**38.10** [1.500]	1-284513-1
12	**41.91** [1.650]	1-284513-2
13	**45.72** [1.800]	1-284513-3

No. of Positions	Dim. A	Part Numbers
14	**49.53** [1.950]	1-284513-4
15	**53.34** [2.100]	1-284513-5
16	**57.15** [2.250]	1-284513-6
17	**60.96** [2.400]	1-284513-7
18	**64.77** [2.550]	1-284513-8
19	**68.58** [2.700]	1-284513-9
20	**72.39** [2.850]	2-284513-0
21	**76.20** [3.000]	2-284513-1
22	**80.01** [3.150]	2-284513-2
23	**83.82** [3.300]	2-284513-3
24	**87.63** [3.450]	2-284513-4
25	**91.44** [3.600]	2-284513-5

For complete product information, order Catalog 1308389

Products for Industrial & Commercial Applications

Dimensions are shown for reference purposes only.

Dimensions are in inches and millimeters unless otherwise specified. Values in brackets are metric equivalents.

Specifications subject to change.

Technical Support Center
1-800-522-6752
www.tycoelectronics.com

Two-Piece Terminal Block Connectors

Right-Angle Open End Stacking Headers, 5.0 mm Centerline Color – See chart.

UL Rating – 300 V, 12 A

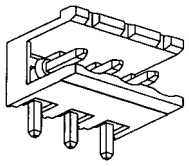

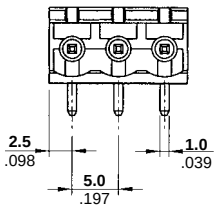

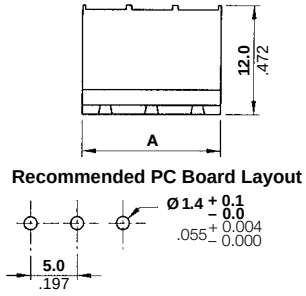

No. of Positions	Dim. A	Part Numbers	
		Gray	Blue
2	**10.0** [0.394]	282812-2	796698-2
3	**15.0** [0.591]	282812-3	796698-3
4	**20.0** [0.787]	282812-4	796698-4
5	**25.0** [0.984]	282812-5	796698-5
6	**30.0** [1.181]	282812-6	796698-6
7	**35.0** [1.378]	282812-7	796698-7
8	**40.0** [1.575]	282812-8	796698-8
9	**45.0** [1.772]	282812-9	796698-9
10	**50.0** [1.968]	1-282812-0	1-796698-0
11	**55.0** [2.165]	1-282812-1	1-796698-1
12	**60.0** [2.362]	1-282812-2	1-796698-2
13	**65.0** [2.559]	1-282812-3	1-796698-3

No. of Positions	Dim. A	Part Numbers	
		Gray	Blue
14	**70.0** [2.756]	1-282812-4	1-796698-4
15	**75.0** [2.953]	1-282812-5	1-796698-5
16	**80.0** [3.150]	1-282812-6	1-796698-6
17	**85.0** [3.346]	1-282812-7	1-796698-7
18	**90.0** [3.543]	1-282812-8	1-796698-8
19	**95.0** [3.740]	1-282812-9	1-796698-9
20	**100.0** [3.937]	2-282812-0	2-796698-0
21	**105.0** [4.134]	2-282812-1	2-796698-1
22	**110.0** [4.331]	2-282812-2	2-796698-2
23	**115.0** [4.528]	2-282812-3	2-796698-3
24	**120.0** [4.724]	2-282812-4	2-796698-4
25	**125.0** [4.921]	2-282812-5	2-796698-5

Note: BUCHANAN Terminal Block Series B72N4HxxT has been replaced with 796698-xx (blue).

Right-Angle Closed End Headers, 5.0 mm Centerline Color – See chart.

UL Rating – 300 V, 12 A

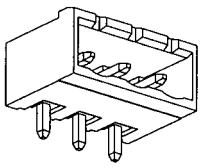

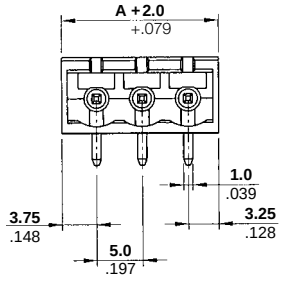

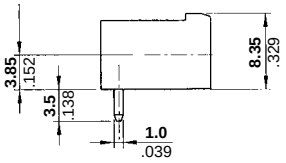

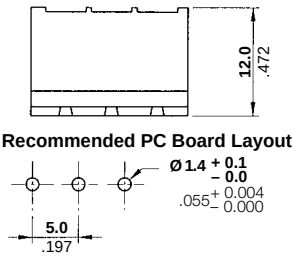

No. of Positions	Dim. A	Part Numbers			
		Gray	Green	Blue	Black
2	**10.0** [0.394]	282810-2	796644-2	796700-2	796645-2
3	**15.0** [0.591]	282810-3	796644-3	796700-3	796645-3
4	**20.0** [0.787]	282810-4	796644-4	796700-4	796645-4
5	**25.0** [0.984]	282810-5	796644-5	796700-5	796645-5
6	**30.0** [1.181]	282810-6	796644-6	796700-6	796645-6
7	**35.0** [1.378]	282810-7	796644-7	796700-7	796645-7
8	**40.0** [1.575]	282810-8	796644-8	796700-8	796645-8
9	**45.0** [1.772]	282810-9	796644-9	796700-9	796645-9
10	**50.0** [1.968]	1-282810-0	1-796644-0	1-796700-0	1-796645-0
11	**55.0** [2.165]	1-282810-1	1-796644-1	1-796700-1	1-796645-1
12	**60.0** [2.362]	1-282810-2	1-796644-2	1-796700-2	1-796645-2
13	**65.0** [2.559]	1-282810-3	1-796644-3	1-796700-3	1-796645-3

No. of Positions	Dim. A	Part Numbers			
		Gray	Green	Blue	Black
14	**70.0** [2.756]	1-282810-4	1-796644-4	1-796700-4	1-796645-4
15	**75.0** [2.953]	1-282810-5	1-796644-5	1-796700-5	1-796645-5
16	**80.0** [3.150]	1-282810-6	1-796644-6	1-796700-6	1-796645-6
17	**85.0** [3.346]	1-282810-7	1-796644-7	1-796700-7	1-796645-7
18	**90.0** [3.543]	1-282810-8	1-796644-8	1-796700-8	1-796645-8
19	**95.0** [3.740]	1-282810-9	1-796644-9	1-796700-9	1-796645-9
20	**100.0** [3.937]	2-282810-0	2-796644-0	2-796700-0	2-796645-0
21	**105.0** [4.134]	2-282810-1	2-796644-1	2-796700-1	2-796645-1
22	**110.0** [4.331]	2-282810-2	2-796644-2	2-796700-2	2-796645-2
23	**115.0** [4.528]	2-282810-3	2-796644-3	2-796700-3	2-796645-3
24	**120.0** [4.724]	2-282810-4	2-796644-4	2-796700-4	2-796645-4
25	**125.0** [4.921]	2-282810-5	2-796644-5	2-796700-5	2-796645-5

Note: RDI Terminal Block Series 2EHDR-xx has been replaced with 796644-xx (green) and 796645-xx (black).
BUCHANAN Terminal Block Series B73N4HxxT has been replaced with 796700-xx (blue) and 796645-xx (black).

For complete product information, order Catalog 1308389

Products for Industrial & Commercial Applications

Dimensions are shown for reference purposes only.

Dimensions are in inches and millimeters unless otherwise specified. Values in brackets are metric equivalents.

Specifications subject to change.

Technical Support Center
1-800-522-6752
www.tycoelectronics.com

Two-Piece Terminal Block Connectors

Right-Angle Open End Stacking Headers, 5.08 mm Centerline Color – Gray

UL Rating – 300 V, 12 A

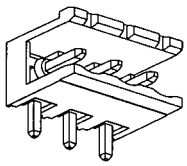

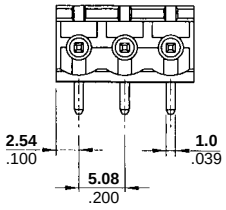

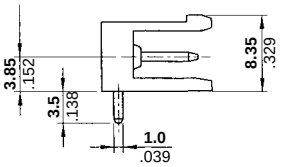

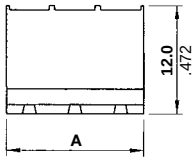

Recommended PC Board Layout

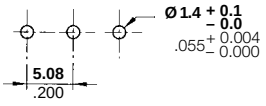

No. of Positions	Dim. A	Part Numbers
2	**10.16** [0.400]	282815-2
3	**15.24** [0.600]	282815-3
4	**20.32** [0.800]	282815-4
5	**25.40** [1.000]	282815-5
6	**30.48** [1.200]	282815-6
7	**35.56** [1.400]	282815-7
8	**40.64** [1.600]	282815-8
9	**45.72** [1.800]	282815-9
10	**50.80** [2.000]	1-282815-0
11	**55.88** [2.200]	1-282815-1
12	**60.96** [2.400]	1-282815-2
13	**66.04** [2.600]	1-282815-3

No. of Positions	Dim. A	Part Numbers
14	**71.12** [2.800]	1-282815-4
15	**76.20** [3.000]	1-282815-5
16	**81.28** [3.200]	1-282815-6
17	**86.36** [3.400]	1-282815-7
18	**91.44** [3.600]	1-282815-8
19	**96.52** [3.800]	1-282815-9
20	**101.60** [4.000]	2-282815-0
21	**106.68** [4.200]	2-282815-1
22	**111.76** [4.400]	2-282815-2
23	**116.84** [4.600]	2-282815-3
24	**121.92** [4.800]	2-282815-4
25	**127.00** [5.000]	2-282815-5

Right-Angle, Closed End Headers, 5.08 mm Centerline Color – See chart.

UL Rating – 300 V, 12 A

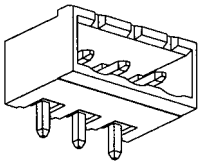

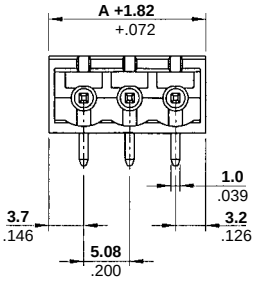

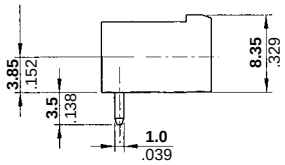

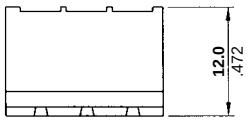

Recommended PC Board Layout

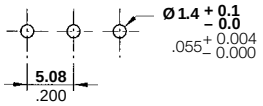

No. of Positions	Dim. A	Part Numbers		
		Gray	Green	Black
2	**10.16** [0.400]	282813-2	796638-2	796639-2
3	**15.24** [0.600]	282813-3	796638-3	796639-3
4	**20.32** [0.800]	282813-4	796638-4	796639-4
5	**25.40** [1.000]	282813-5	796638-5	796639-5
6	**30.48** [1.200]	282813-6	796638-6	796639-6
7	**35.56** [1.400]	282813-7	796638-7	796639-7
8	**40.64** [1.600]	282813-8	796638-8	796639-8
9	**45.72** [1.800]	282813-9	796638-9	796639-9
10	**50.80** [2.000]	1-282813-0	1-796638-0	1-796639-0
11	**55.88** [2.200]	1-282813-1	1-796638-1	1-796639-1
12	**60.96** [2.400]	1-282813-2	1-796638-2	1-796639-2
13	**66.04** [2.600]	1-282813-3	1-796638-3	1-796639-3

No. of Positions	Dim. A	Part Numbers		
		Gray	Green	Black
14	**71.12** [2.800]	1-282813-4	1-796638-4	1-796639-4
15	**76.20** [3.000]	1-282813-5	1-796638-5	1-796639-5
16	**81.28** [3.200]	1-282813-6	1-796638-6	1-796639-6
17	**86.36** [3.400]	1-282813-7	1-796638-7	1-796639-7
18	**91.44** [3.600]	1-282813-8	1-796638-8	1-796639-8
19	**96.52** [3.800]	1-282813-9	1-796638-9	1-796639-9
20	**101.60** [4.000]	2-282813-0	2-796638-0	2-796639-0
21	**106.68** [4.200]	2-282813-1	2-796638-1	2-796639-1
22	**111.76** [4.400]	2-282813-2	2-796638-2	2-796639-2
23	**116.84** [4.600]	2-282813-3	2-796638-3	2-796639-3
24	**121.92** [4.800]	2-282813-4	2-796638-4	2-796639-4
25	**127.00** [5.000]	2-282813-5	2-796638-5	2-796639-5

Note: RDI Terminal Block Series 2EHDR-XX has been superceded/replaced with 796638-xx (green) and 796639-xx (black).
For complete product information, order Catalog 1308389

Products for Industrial & Commercial Applications

Dimensions are shown for reference purposes only.

Dimensions are in inches and millimeters unless otherwise specified. Values in brackets are metric equivalents.

Specifications subject to change.

Technical Support Center
1-800-522-6752
www.tycoelectronics.com

Two-Piece Terminal Block Connectors

Vertical Open End Double Row Header w/Interlock, 5.0mm Centerline Color – Gray

UL Rating – 300 V, 12 A

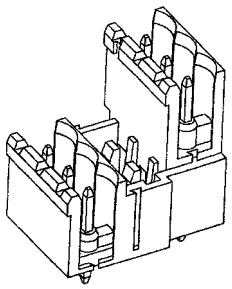

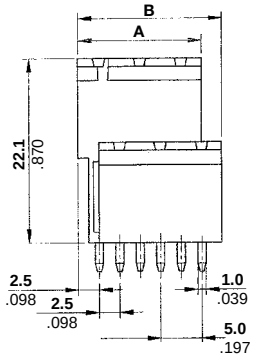

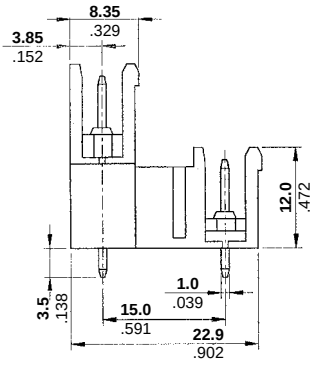

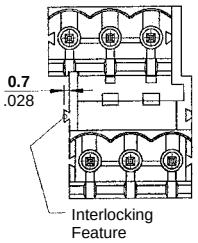

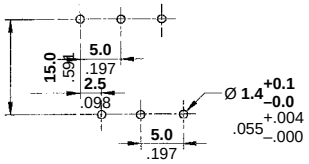

Number of Positions	Dim. A	Dim. B	Part Numbers
2	**10.0** [0.394]	**12.5** [0.492]	284056-2
3	**15.0** [0.591]	**17.5** [0.689]	284056-3

Vertical Open End Double Row Header w/Interlock, 5.08mm Centerline Color – Gray

UL Rating – 300 V, 12 A

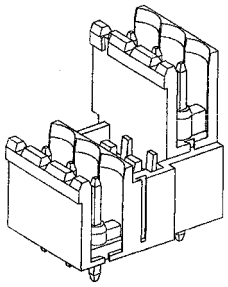

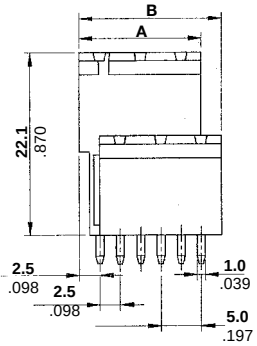

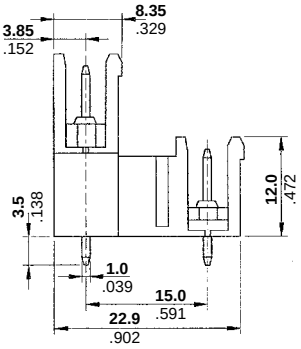

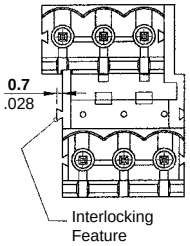

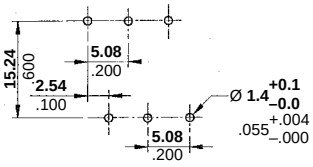

Number of Positions	Dim. A	Dim. B	Part Numbers
2	**10.16** [0.400]	**12.70** [0.500]	284057-2
3	**15.24** [0.600]	**17.78** [0.700]	284057-3

For complete product information, order Catalog 1308389

Products for Industrial & Commercial Applications

Dimensions are shown for reference purposes only.

Dimensions are in inches and millimeters unless otherwise specified. Values in brackets are metric equivalents.

Specifications subject to change.

Technical Support Center
1-800-522-6752
www.tycoelectronics.com

Two-Piece Terminal Block Connectors

Vertical Closed End Double Row Header 5.0mm Centerline Color – Gray

UL Rating – 300 V, 12 A

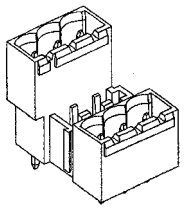

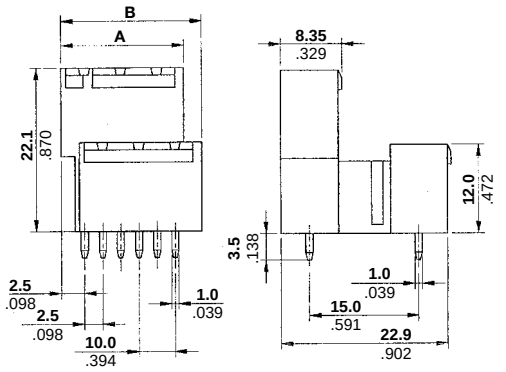

Recommended PC Board Layout

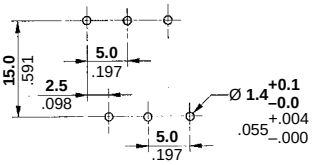

Number of Positions	Dim. A	Dim. B	Part Numbers
2	**12.0** [0.472]	**14.5** [0.571]	284064-2
3	**17.0** [0.669]	**19.5** [0.768]	284064-3
4	**22.0** [0.866]	**24.5** [0.965]	284064-4
5	**27.0** [1.063]	**29.5** [1.161]	284064-5
6	**32.0** [1.260]	**34.5** [1.358]	284064-6
7	**37.0** [1.457]	**39.5** [1.555]	284064-7
8	**42.0** [1.654]	**44.5** [1.752]	284064-8
9	**47.0** [1.850]	**49.5** [1.949]	284064-9
10	**52.0** [2.047]	**54.5** [2.146]	1-284064-0
11	**57.0** [2.244]	**59.5** [2.343]	1-284064-1
12	**62.0** [2.441]	**64.5** [2.539]	1-284064-2
13	**67.0** [2.638]	**69.5** [2.736]	1-284064-3

Number of Positions	Dim. A	Dim. B	Part Numbers
14	**72.0** [2.835]	**74.5** [2.933]	1-284064-4
15	**77.0** [3.031]	**79.5** [3.130]	1-284064-5
16	**82.0** [3.228]	**84.5** [3.327]	1-284064-6
17	**87.0** [3.425]	**89.5** [3.524]	1-284064-7
18	**92.0** [3.622]	**94.5** [3.720]	1-284064-8
19	**97.0** [3.819]	**99.5** [3.917]	1-284064-9
20	**102.0** [4.016]	**104.5** [4.114]	2-284064-0
21	**107.0** [4.213]	**109.5** [4.311]	2-284064-1
22	**112.0** [4.409]	**114.5** [4.508]	2-284064-2
23	**117.0** [4.606]	**119.5** [4.705]	2-284064-3
24	**122.0** [4.803]	**124.5** [4.902]	2-284064-4
25	**127.0** [5.000]	**129.5** [5.098]	2-284064-5

Vertical Closed End Double Row Header 5.08mm Centerline Color – Gray

UL Rating – 300 V, 12 A

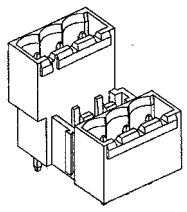

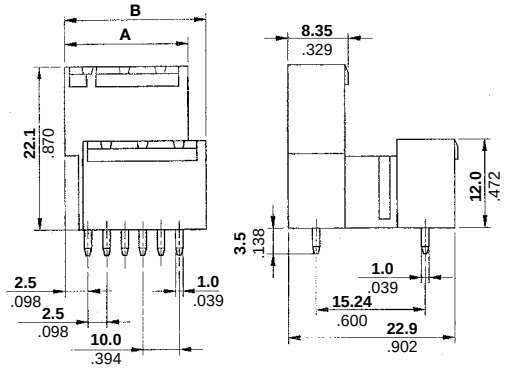

Recommended PC Board Layout

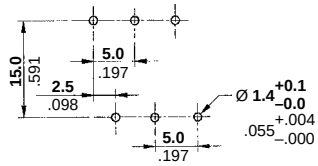

Number of Positions	Dim. A	Dim. B	Part Numbers
2	**12.20** [0.480]	**14.74** [0.580]	284065-2
3	**17.28** [0.680]	**19.82** [0.780]	284065-3
4	**22.36** [0.880]	**24.90** [0.980]	284065-4
5	**27.44** [1.080]	**29.98** [1.180]	284065-5
6	**32.52** [1.280]	**35.06** [1.380]	284065-6
7	**37.60** [1.480]	**40.14** [1.580]	284065-7
8	**42.68** [1.680]	**45.22** [1.780]	284065-8
9	**47.76** [1.880]	**50.30** [1.980]	284065-9
10	**52.84** [2.080]	**55.38** [2.180]	1-284065-0
11	**57.92** [2.280]	**60.46** [2.680]	1-284065-1
12	**63.00** [2.480]	**65.54** [2.580]	1-284065-2
13	**68.08** [2.680]	**70.62** [2.780]	1-284065-3

Number of Positions	Dim. A	Dim. B	Part Numbers
14	**72.0** [2.835]	**74.5** [2.933]	1-284065-4
15	**77.0** [3.031]	**79.5** [3.130]	1-284065-5
16	**82.0** [3.228]	**84.5** [3.327]	1-284065-6
17	**87.0** [3.425]	**89.5** [3.524]	1-284065-7
18	**92.0** [3.622]	**94.5** [3.720]	1-284065-8
19	**97.0** [3.819]	**99.5** [3.917]	1-284065-9
20	**102.0** [4.016]	**104.5** [4.114]	2-284065-0
21	**107.0** [4.213]	**109.5** [4.311]	2-284065-1
22	**112.0** [4.409]	**114.5** [4.508]	2-284065-2
23	**117.0** [4.606]	**119.5** [4.705]	2-284065-3
24	**122.0** [4.803]	**124.5** [4.902]	2-284065-4
25	**127.0** [5.000]	**129.5** [5.098]	2-284065-5

For complete product information, order Catalog 1308389

Products for Industrial & Commercial Applications

Dimensions are shown for reference purposes only.

Dimensions are in inches and millimeters unless otherwise specified. Values in brackets are metric equivalents.

Specifications subject to change.

Technical Support Center
1-800-522-6752
www.tycoelectronics.com

Two-Piece Terminal Block Connectors

Right-Angle Open End Double Row Header w/Interlock 5.0mm Centerline Color – Gray

UL Rating – 300 V, 12 A

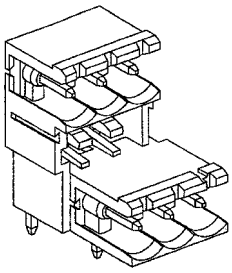

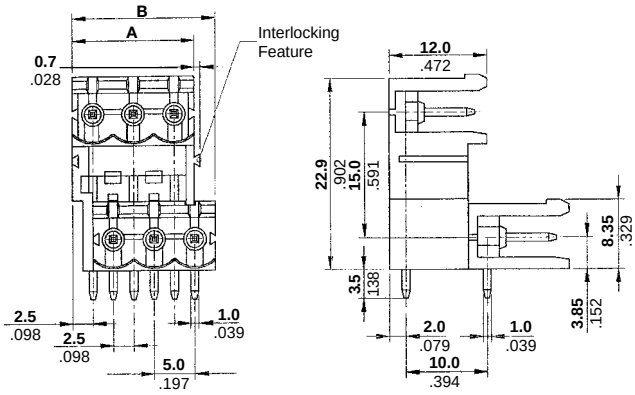

Recommended PC Board Layout

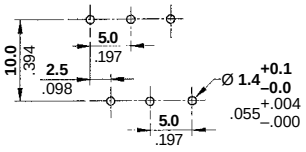

Number of Positions	Dim. A	Dim. B	Part Numbers
2	**10.0** [0.394]	**12.5** [0.492]	284052-2
3	**15.0** [0.591]	**17.5** [0.689]	284052-3

Right-Angle Open End Double Row Header w/Interlock 5.08mm Centerline Color – Gray

UL Rating – 300 V, 12 A

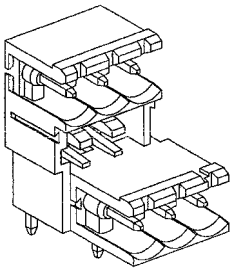

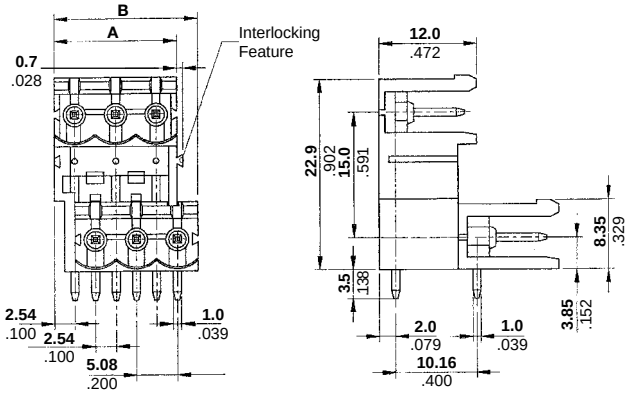

Recommended PC Board Layout

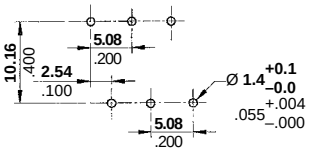

Number of Positions	Dim. A	Dim. B	Part Numbers
2	**10.16** [0.400]	**12.70** [0.500]	284053-2
3	**15.24** [0.600]	**17.78** [0.700]	284053-3

For complete product information, order Catalog 1308389

Products for Industrial & Commercial Applications

Dimensions are shown for reference purposes only.

Dimensions are in inches and millimeters unless otherwise specified. Values in brackets are metric equivalents.

Specifications subject to change.

Technical Support Center
1-800-522-6752
www.tycoelectronics.com

Two-Piece Terminal Block Connectors

Right-Angle Closed End Double Row Header w/Interlock 5.0mm Centerline Color – Gray

UL Rating – 300 V, 12 A

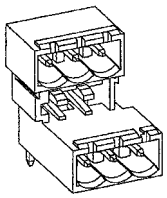

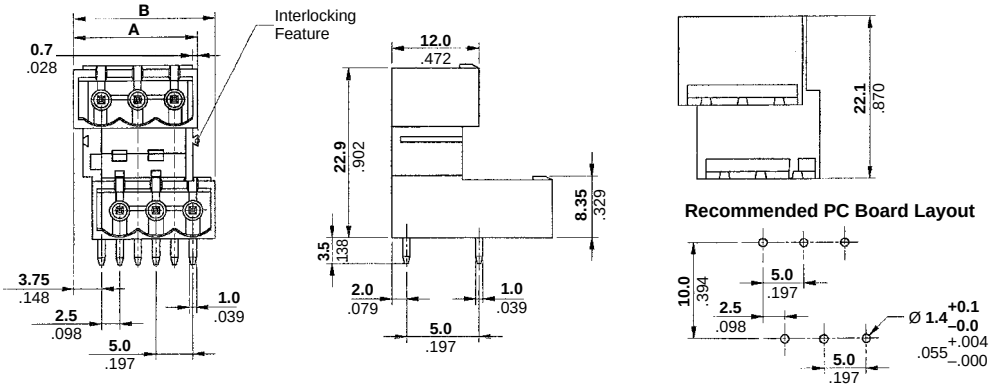

Number of Positions	Dim. A	Dim. B	Part Numbers
2	**12.0** [0.472]	**14.5** [0.571]	284060-2
3	**17.0** [0.669]	**19.5** [0.768]	284060-3
4	**22.0** [0.866]	**24.5** [0.965]	284060-4
5	**27.0** [1.063]	**29.5** [1.161]	284060-5
6	**32.0** [1.260]	**34.5** [1.358]	284060-6
7	**37.0** [1.457]	**39.5** [1.555]	284060-7
8	**42.0** [1.654]	**44.5** [1.752]	284060-8
9	**47.0** [1.850]	**49.5** [1.949]	284060-9
10	**52.0** [2.047]	**54.5** [2.146]	1-284060-0
11	**57.0** [2.244]	**59.5** [2.343]	1-284060-1
12	**62.0** [2.441]	**64.5** [2.539]	1-284060-2
13	**67.0** [2.638]	**69.5** [2.736]	1-284060-3

Number of Positions	Dim. A	Dim. B	Part Numbers
14	**72.0** [2.835]	**74.5** [2.933]	1-284060-4
15	**77.0** [3.031]	**79.5** [3.130]	1-284060-5
16	**82.0** [3.228]	**84.5** [3.327]	1-284060-6
17	**87.0** [3.425]	**89.5** [3.524]	1-284060-7
18	**92.0** [3.622]	**94.5** [3.720]	1-284060-8
19	**97.0** [3.819]	**99.5** [3.917]	1-284060-9
20	**102.0** [4.016]	**104.5** [4.114]	2-284060-0
21	**107.0** [4.213]	**109.5** [4.311]	2-284060-1
22	**112.0** [4.409]	**114.5** [4.508]	2-284060-2
23	**117.0** [4.606]	**119.5** [4.705]	2-284060-3
24	**122.0** [4.803]	**124.5** [4.902]	2-284060-4
25	**127.0** [5.000]	**129.5** [5.098]	2-284060-5

Right-Angle Closed End Double Row Header w/Interlock 5.08mm Centerline Color – Gray

UL Rating – 300 V, 12 A

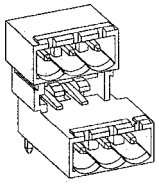

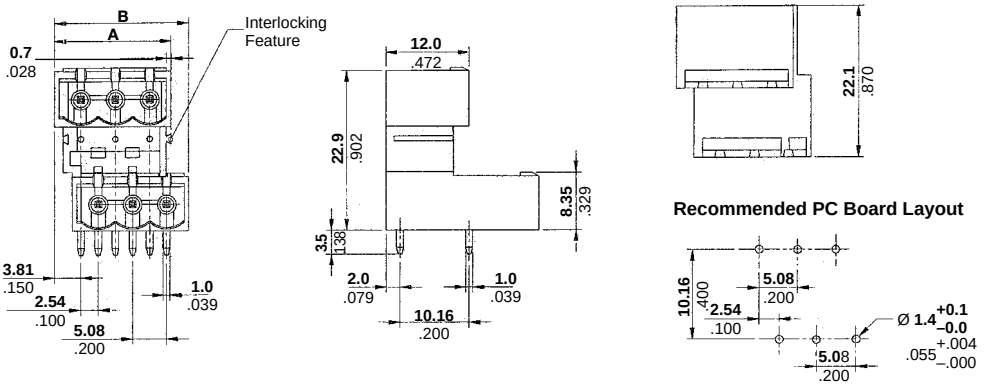

Number of Positions	Dim. A	Dim. B	Part Numbers
2	**12.20** [0.480]	**14.74** [0.580]	284061-2
3	**17.28** [0.680]	**19.82** [0.780]	284061-3
4	**22.36** [0.880]	**24.90** [0.980]	284061-4
5	**27.44** [1.080]	**29.98** [1.180]	284061-5
6	**32.52** [1.280]	**35.06** [1.380]	284061-6
7	**37.60** [1.480]	**40.14** [1.580]	284061-7
8	**42.68** [1.680]	**45.22** [1.780]	284061-8
9	**47.76** [1.880]	**50.30** [1.980]	284061-9
10	**52.84** [2.080]	**55.38** [2.180]	1-284061-0
11	**57.92** [2.280]	**60.46** [2.680]	1-284061-1
12	**63.00** [2.480]	**65.54** [2.580]	1-284061-2
13	**68.08** [2.680]	**70.62** [2.780]	1-284061-3

Number of Positions	Dim. A	Dim. B	Part Numbers
14	**73.16** [2.880]	**75.70** [2.980]	1-284061-4
15	**78.24** [3.080]	**80.78** [3.180]	1-284061-5
16	**83.32** [3.280]	**85.86** [3.380]	1-284061-6
17	**88.40** [3.480]	**90.94** [3.580]	1-284061-7
18	**93.48** [3.680]	**96.02** [3.780]	1-284061-8
19	**98.56** [3.880]	**101.10** [3.980]	1-284061-9
20	**103.64** [4.080]	**106.18** [4.180]	2-284061-0
21	**108.72** [4.480]	**111.26** [4.380]	2-284061-1
22	**113.80** [4.880]	**116.34** [4.580]	2-284061-2
23	**118.88** [4.680]	**121.42** [4.780]	2-284061-3
24	**123.96** [4.880]	**126.50** [4.980]	2-284061-4
25	**129.04** [5.080]	**131.58** [5.180]	2-284061-5

For complete product information, order Catalog 1308389

Products for Industrial & Commercial Applications

Dimensions are shown for reference purposes only.

Dimensions are in inches and millimeters unless otherwise specified. Values in brackets are metric equivalents.

Specifications subject to change.

Technical Support Center
1-800-522-6752
www.tycoelectronics.com

Two-Piece Terminal Block Connectors

Plug, Right-Angle w/Screw Flange 1.5 mm² Solid Wire, 3.5mm Centerline, Color – Green

UL Rating – 150 V, 10 A 14-30 AWG

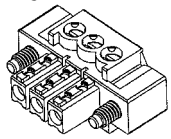

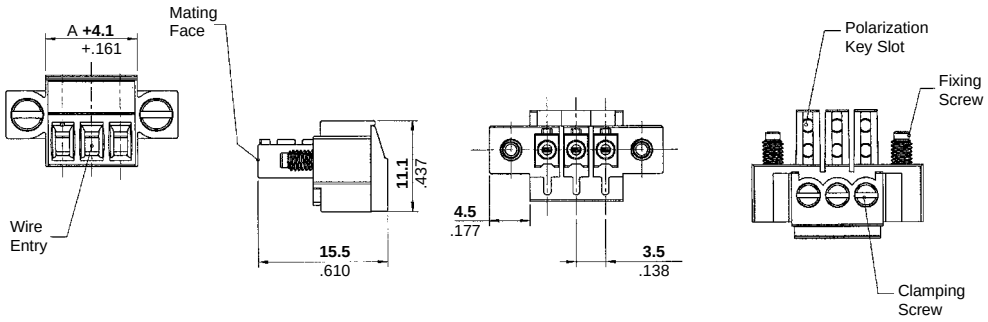

Suggested Screw Torque—
2.2 in.-lb.

No. of Positions	Dim. A	Part Numbers
2	**3.5** [0.138]	284510-2
3	**7.0** [0.276]	284510-3
4	**10.5** [0.413]	284510-4
5	**14.0** [0.551]	284510-5
6	**17.5** [0.689]	284510-6
7	**21.0** [0.827]	284510-7
8	**24.5** [0.965]	284510-8
9	**28.0** [1.102]	284510-9
10	**31.5** [1.240]	1-284510-0
11	**35.0** [1.378]	1-284510-1
12	**38.5** [1.516]	1-284510-2

No. of Positions	Dim. A	Part Numbers
13	**42.0** [1.654]	1-284510-3
14	**45.5** [1.791]	1-284510-4
15	**49.0** [1.929]	1-284510-5
16	**52.5** [2.067]	1-284510-6
17	**56.0** [2.205]	1-284510-7
18	**59.5** [2.343]	1-284510-8
19	**63.0** [2.480]	1-284510-9
20	**66.5** [2.618]	2-284510-0
21	**70.0** [2.756]	2-284510-1
22	**73.5** [2.894]	2-284510-2
23	**77.0** [3.031]	2-284510-3

Plug, Right-Angle w/Screw Flange 1.5 mm² Solid Wire, 3.8 mm Centerline, Color – Green

UL Rating – 150 V, 10 A 14-30 AWG

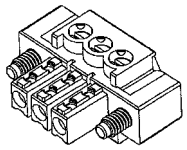

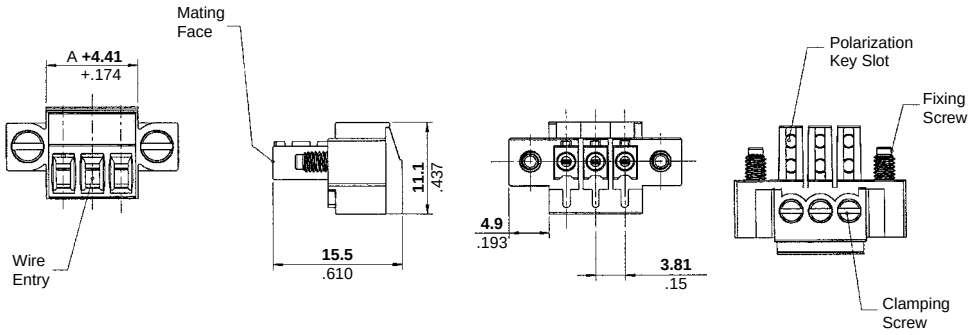

Suggested Screw Torque—
2.2 in.-lb.

No. of Positions	Dim. A	Part Numbers
2	**3.81** [0.150]	284511-2
3	**7.62** [0.300]	284511-3
4	**11.43** [0.450]	284511-4
5	**15.24** [0.600]	284511-5
6	**19.05** [0.750]	284511-6
7	**22.86** [0.900]	284511-7
8	**26.67** [1.050]	284511-8
9	**30.48** [1.200]	284511-9
10	**34.29** [1.350]	1-284511-0
11	**38.10** [1.500]	1-284511-1
12	**41.91** [1.650]	1-284511-2

No. of Positions	Dim. A	Part Numbers
13	**45.72** [1.800]	1-284511-3
14	**49.53** [1.950]	1-284511-4
15	**53.34** [2.100]	1-284511-5
16	**57.15** [2.250]	1-284511-6
17	**60.96** [2.400]	1-284511-7
18	**64.77** [2.550]	1-284511-8
19	**68.58** [2.700]	1-284511-9
20	**72.39** [2.850]	2-284511-0
21	**76.20** [3.000]	2-284511-1
22	**80.01** [3.150]	2-284511-2
23	**83.82** [3.300]	2-284511-3

For complete product information, order Catalog 1308389

Products for Industrial & Commercial Applications

Dimensions are shown for reference purposes only.

Dimensions are in inches and millimeters unless otherwise specified. Values in brackets are metric equivalents.

Specifications subject to change.

Technical Support Center
1-800-522-6752
www.tycoelectronics.com

Two-Piece Terminal Block Connectors

Plug, (Right-Hand Version) Straight w/Locking Screw Flange, 5.0 mm Centerline, Color – Green

UL Rating – 300 V, 12 A
12-30 AWG

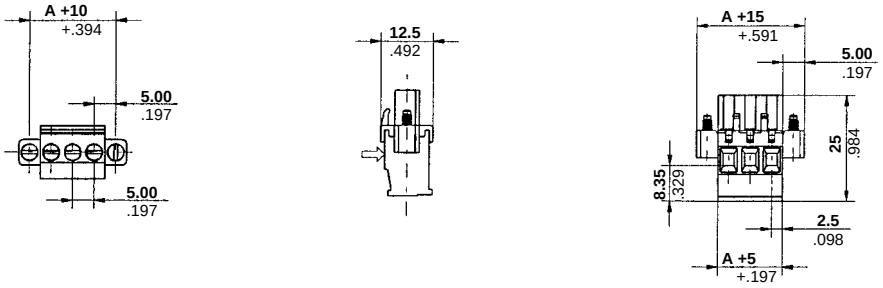

No. of Positions	Dim. A	Part Numbers
2	**5.0** [0.197]	796862-2
3	**10.0** [0.394]	796862-3
4	**15.0** [0.591]	796862-4
5	**20.0** [0.787]	796862-5
6	**25.0** [0.984]	796862-6
7	**30.0** [1.181]	796862-7
8	**35.0** [1.378]	796862-8

Plug, (Left-Hand Version) Straight w/Locking Screw Flange, 5.0 mm Centerline, Color – Green

UL Rating – 300 V, 12 A
12-30 AWG

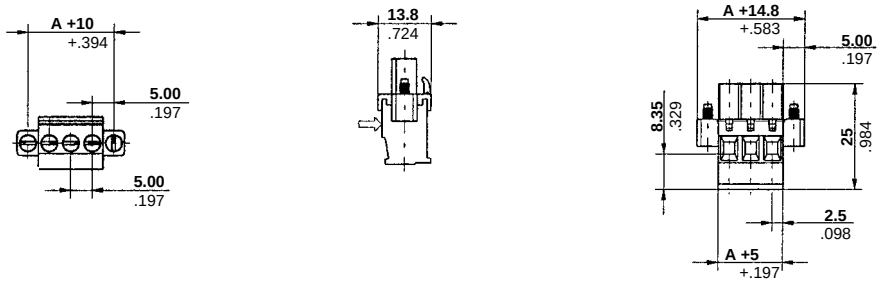

No. of Positions	Dim. A	Part Numbers
2	**5.0** [0.197]	796860-2
3	**10.0** [0.394]	796860-3
4	**15.0** [0.591]	796860-4
5	**20.0** [0.787]	796860-5
6	**25.0** [0.984]	796860-6
7	**30.0** [1.181]	796860-7
8	**35.0** [1.378]	796860-8

For complete product information, order Catalog 1308389

Products for Industrial & Commercial Applications

Dimensions are shown for reference purposes only.

Dimensions are in inches and millimeters unless otherwise specified. Values in brackets are metric equivalents.

Specifications subject to change.

Technical Support Center
1-800-522-6752
www.tycoelectronics.com

Two-Piece Terminal Block Connectors

Plug, (Left-Hand Version) Straight w/Locking Screw Flange, 5.08 mm Centerline, Color – Green

UL Rating – 300 V, 12 A
12-30 AWG

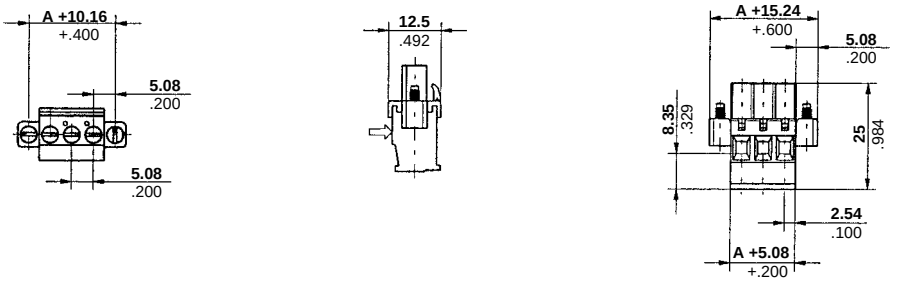

No. of Positions	Dim. A	Part Numbers
2	**5.08** [0.200]	796861-2
3	**10.16** [0.400]	796861-3
4	**15.24** [0.600]	796861-4
5	**20.32** [0.800]	796861-5
6	**25.40** [1.000]	796861-6
7	**30.48** [1.200]	796861-7
8	**35.56** [1.400]	796861-8
9	**40.64** [1.600]	796861-9
10	**45.72** [1.800]	1-796861-0
11	**50.80** [2.000]	1-796861-1
12	**55.88** [2.200]	1-796861-2

No. of Positions	Dim. A	Part Numbers
13	**60.96** [2.400]	1-796861-3
14	**66.04** [2.600]	1-796861-4
15	**71.12** [2.800]	1-796861-5
16	**76.20** [3.000]	1-796861-6
17	**81.28** [3.200]	1-796861-7
18	**86.36** [3.400]	1-796861-8
19	**91.44** [3.600]	1-796861-9
20	**96.52** [3.800]	2-796861-0
21	**101.60** [4.000]	2-796861-1
22	**106.68** [4.200]	2-796861-2
23	**111.76** [4.400]	2-796861-3

Plug, (Right-Hand Version) Straight w/Locking Screw Flange, 5.08 mm Centerline, Color – Green

UL Rating – 300 V, 12 A
12-30 AWG

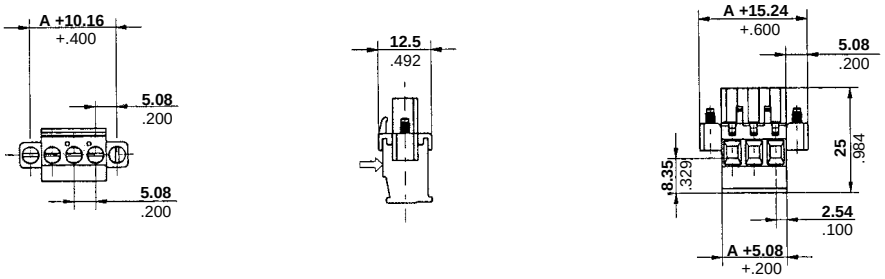

No. of Positions	Dim. A	Part Numbers
2	**5.08** [0.200]	796863-2
3	**10.16** [0.400]	796863-3
4	**15.24** [0.600]	796863-4
5	**20.32** [0.800]	796863-5
6	**25.40** [1.000]	796863-6
7	**30.48** [1.200]	796863-7
8	**35.56** [1.400]	796863-8
9	**40.64** [1.600]	796863-9
10	**45.72** [1.800]	1-796863-0
11	**50.80** [2.000]	1-796863-1
12	**55.88** [2.200]	1-796863-2

No. of Positions	Dim. A	Part Numbers
13	**60.96** [2.400]	1-796863-3
14	**66.04** [2.600]	1-796863-4
15	**71.12** [2.800]	1-796863-5
16	**76.20** [3.000]	1-796863-6
17	**81.28** [3.200]	1-796863-7
18	**86.36** [3.400]	1-796863-8
19	**91.44** [3.600]	1-796863-9
20	**96.52** [3.800]	2-796863-0
21	**101.60** [4.000]	2-796863-1
22	**106.68** [4.200]	2-796863-2
23	**111.76** [4.400]	2-796863-3

For complete product information, order Catalog 1308389

Products for Industrial & Commercial Applications

Dimensions are shown for reference purposes only.

Dimensions are in inches and millimeters unless otherwise specified. Values in brackets are metric equivalents.

Specifications subject to change.

Technical Support Center
1-800-522-6752
www.tycoelectronics.com

Two-Piece Terminal Block Connectors

Plug, Right-Angle 1.5 mm² Solid Wire, 3.5 mm Centerline, Colors – Green and Blue

UL Rating – 150 V, 10 A 14-30 AWG

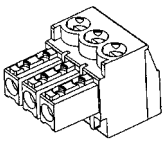

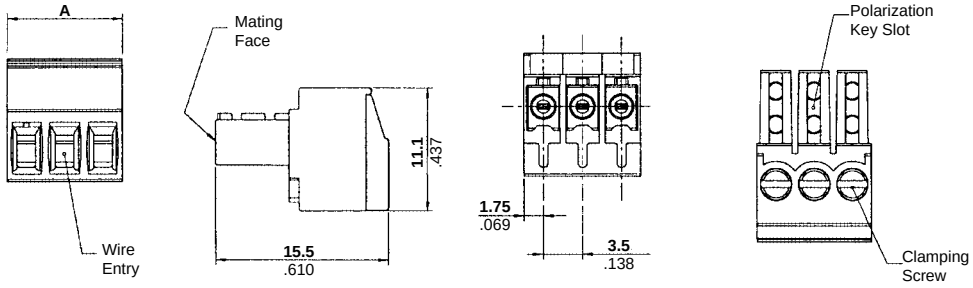

Suggested Screw Torque— 2.2 in.-lb.

No. of Positions	Dim. A	Part Numbers	
		Green	Blue
2	**7.0** [0.276]	284506-2	796693-2
3	**10.5** [0.413]	284506-3	796693-3
4	**14.0** [0.551]	284506-4	796693-4
5	**17.5** [0.689]	284506-5	796693-5
6	**21.0** [0.827]	284506-6	796693-6
7	**24.5** [0.965]	284506-7	796693-7
8	**28.0** [1.102]	284506-8	796693-8
9	**31.5** [1.240]	284506-9	796693-9
10	**35.0** [1.378]	1-284506-0	1-796693-0
11	**38.5** [1.516]	1-284506-1	1-796693-1
12	**42.0** [1.654]	1-284506-2	1-796693-2
13	**45.5** [1.791]	1-284506-3	1-796693-3

No. of Positions	Dim. A	Part Numbers	
		Green	Blue
14	**49.0** [1.929]	1-284506-4	1-796693-4
15	**52.5** [2.067]	1-284506-5	1-796693-5
16	**56.0** [2.205]	1-284506-6	1-796693-6
17	**59.5** [2.343]	1-284506-7	1-796693-7
18	**63.0** [2.450]	1-284506-8	1-796693-8
19	**66.5** [2.618]	1-284506-9	1-796693-9
20	**70.0** [2.756]	2-284506-0	2-796693-0
21	**73.5** [2.894]	2-284506-1	2-796693-1
22	**77.0** [3.031]	2-284506-2	2-796693-2
23	**80.5** [3.169]	2-284506-3	2-796693-3
24	**84.0** [3.307]	2-284506-4	2-796693-4
25	**87.5** [3.445]	2-284506-5	2-796693-5

Note: BUCHANAN Terminal Block Series B52C3UXXT has been superceded/replaced with 796693-xx (blue).

Plug, Right-Angle 1.5 mm² Solid Wire, 3.81 mm Centerline Color – Green

UL Rating – 150 V, 10 A 14-30 AWG

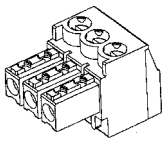

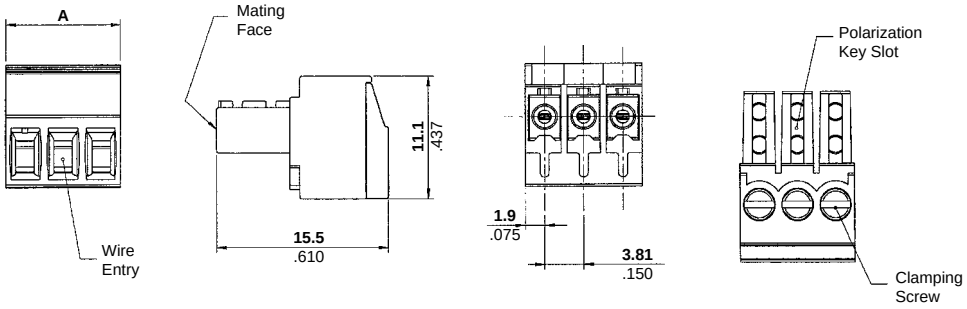

Suggested Screw Torque— 2.2 in.-lb.

No. of Positions	Dim. A	Part Numbers
2	**7.62** [0.300]	284507-2
3	**11.43** [0.450]	284507-3
4	**15.24** [0.600]	284507-4
5	**19.05** [0.750]	284507-5
6	**22.86** [0.900]	284507-6
7	**26.67** [1.050]	284507-7
8	**30.48** [1.200]	284507-8
9	**34.29** [1.350]	284507-9
10	**38.10** [1.500]	1-284507-0
11	**41.91** [1.650]	1-284507-1
12	**45.72** [1.800]	1-284507-2
13	**49.53** [1.950]	1-284507-3

No. of Positions	Dim. A	Part Numbers
14	**53.34** [2.100]	1-284507-4
15	**57.15** [2.250]	1-284507-5
16	**60.96** [2.400]	1-284507-6
17	**64.77** [2.550]	1-284507-7
18	**68.58** [2.700]	1-284507-8
19	**72.39** [2.850]	1-284507-9
20	**76.20** [3.000]	2-284507-0
21	**80.01** [3.150]	2-284507-1
22	**83.82** [3.300]	2-284507-2
23	**87.63** [3.450]	2-284507-3
24	**91.44** [3.600]	2-284507-4
25	**95.25** [3.750]	2-284507-5

For complete product information, order Catalog 1308389

Products for Industrial & Commercial Applications

Dimensions are shown for reference purposes only.

Dimensions are in inches and millimeters unless otherwise specified. Values in brackets are metric equivalents.

Specifications subject to change.

Technical Support Center
1-800-522-6752
www.tycoelectronics.com

Two-Piece Terminal Block Connectors

Plug, Right-Angle, 2.5 mm² Solid Wire, 5.0 mm Centerline,

UL Rating – 300 V, 12 A 12-30 AWG

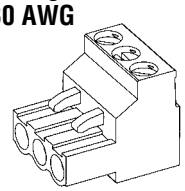

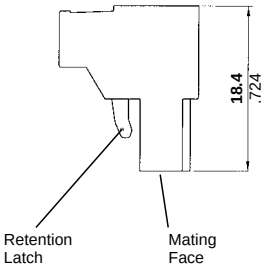

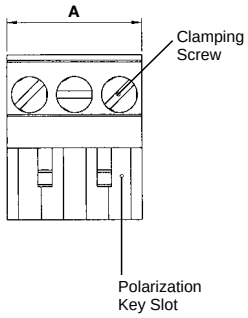

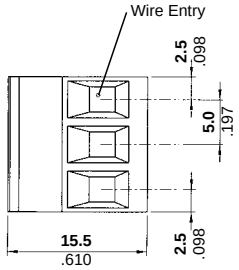

Suggested Screw Torque—
7 in.-lb.

No. of Positions	Dim. A	Part Numbers			
		Gray	Green	Blue	Black
2	**10.0** [0.394]	282804-2	796640-2	796696-2	796641-2
3	**15.0** [0.591]	282804-3	796640-3	796696-3	796641-3
4	**20.0** [0.787]	282804-4	796640-4	796696-4	796641-4
5	**25.0** [0.984]	282804-5	796640-5	796696-5	796641-5
6	**30.0** [1.181]	282804-6	796640-6	796696-6	796641-6
7	**35.0** [1.378]	282804-7	796640-7	796696-7	796641-7
8	**40.0** [1.575]	282804-8	796640-8	796696-8	796641-8
9	**45.0** [1.772]	282804-9	796640-9	796696-9	796641-9
10	**50.0** [1.968]	1-282804-0	1-796640-0	1-796696-0	1-796641-0
11	**55.0** [2.165]	1-282804-1	1-796640-1	1-796696-1	1-796641-1
12	**60.0** [2.362]	1-282804-2	1-796640-2	1-796696-2	1-796641-2
13	**65.0** [2.559]	1-282804-3	1-796640-3	1-796696-3	1-796641-3

No. of Positions	Dim. A	Part Numbers			
		Gray	Green	Blue	Black
14	**70.0** [2.756]	1-282804-4	1-796640-4	1-796696-4	1-796641-4
15	**75.0** [2.953]	1-282804-5	1-796640-5	1-796696-5	1-796641-5
16	**80.0** [3.150]	1-282804-6	1-796640-6	1-796696-6	1-796641-6
17	**85.0** [3.346]	1-282804-7	1-796640-7	1-796696-7	1-796641-7
18	**90.0** [3.543]	1-282804-8	1-796640-8	1-796696-8	1-796641-8
19	**95.0** [3.740]	1-282804-9	1-796640-9	1-796696-9	1-796641-9
20	**100.0** [3.937]	2-282804-0	2-796640-0	2-796696-0	2-796641-0
21	**105.0** [4.134]	2-282804-1	2-796640-1	2-796696-1	2-796641-1
22	**110.0** [4.331]	2-282804-2	2-796640-2	2-796696-2	2-796641-2
23	**115.0** [4.528]	2-282804-3	2-796640-3	2-796696-3	2-796641-3
24	**120.0** [4.724]	2-282804-4	2-796640-4	2-796696-4	2-796641-4
25	**125.0** [4.921]	2-282804-5	2-796640-5	2-796696-5	2-796641-5

Note: BUCHANAN Terminal Block Series B52C4UxxT has been replaced with 796696-xx (blue) and 796641-xx (black).
RDI Terminal Block Series 5ESDV-XX has been replaced with 796640-xx (green) or 796641-xx (black).

Plug, Right-Angle 2.5 mm² Solid Wire, 5.08 mm Centerline,

UL Rating – 300 V, 12 A 12-30 AWG

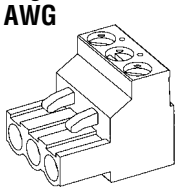

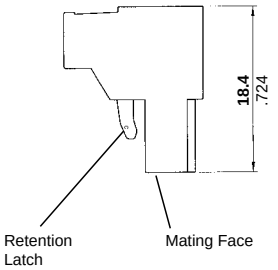

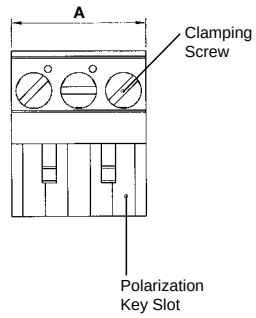

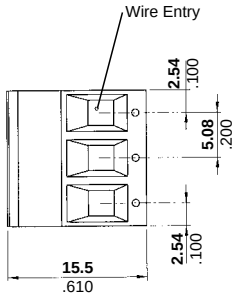

Suggested Screw Torque—
7 in.-lb.

No. of Positions	Dim. A	Part Numbers		
		Gray	Green	Black
2	**10.16** [0.400]	282806-2	796634-2	796635-2
3	**15.24** [0.600]	282806-3	796634-3	796635-3
4	**20.32** [0.800]	282806-4	796634-4	796635-4
5	**25.40** [1.000]	282806-5	796634-5	796635-5
6	**30.48** [1.200]	282806-6	796634-6	796635-6
7	**35.56** [1.400]	282806-7	796634-7	796635-7
8	**40.64** [1.600]	282806-8	796634-8	796635-8
9	**45.72** [1.800]	282806-9	796634-9	796635-9
10	**50.80** [2.000]	1-282806-0	1-796634-0	1-796635-0
11	**55.88** [2.200]	1-282806-1	1-796634-1	1-796635-1
12	**60.96** [2.400]	1-282806-2	1-796634-2	1-796635-2
13	**66.04** [2.600]	1-282806-3	1-796634-3	1-796635-3

No. of Positions	Dim. A	Part Numbers		
		Gray	Green	Black
14	**71.12** [2.800]	1-282806-4	1-796634-4	1-796635-4
15	**76.20** [3.000]	1-282806-5	1-796634-5	1-796635-5
16	**81.28** [3.200]	1-282806-6	1-796634-6	1-796635-6
17	**86.36** [3.400]	1-282806-7	1-796634-7	1-796635-7
18	**91.44** [3.600]	1-282806-8	1-796634-8	1-796635-8
19	**96.52** [3.800]	1-282806-9	1-796634-9	1-796635-9
20	**101.60** [4.000]	2-282806-0	2-796634-0	2-796635-0
21	**106.68** [4.200]	2-282806-1	2-796634-1	2-796635-1
22	**111.76** [4.400]	2-282806-2	2-796634-2	2-796635-2
23	**116.84** [4.600]	2-282806-3	2-796634-3	2-796635-3
24	**121.92** [4.800]	2-282806-4	2-796634-4	2-796635-4
25	**127.00** [5.000]	2-282806-5	2-796634-5	2-796635-5

Note: RDI Terminal Block Series 2ESDV-xx has been replaced with 796634-xx (green) and 796635-xx (black).

Products for Industrial & Commercial Applications

Dimensions are shown for reference purposes only.

Dimensions are in inches and millimeters unless otherwise specified. Values in brackets are metric equivalents.

Specifications subject to change.

Technical Support Center
1-800-522-6752
www.tycoelectronics.com

Two-Piece Terminal Block Connectors

Plug, Right-Angle w/Interlock
1.5 mm² Solid Wire
3.5 mm Centerline
Color – Green

UL Rating – 150 V, 10 A
14-30 AWG

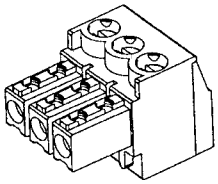

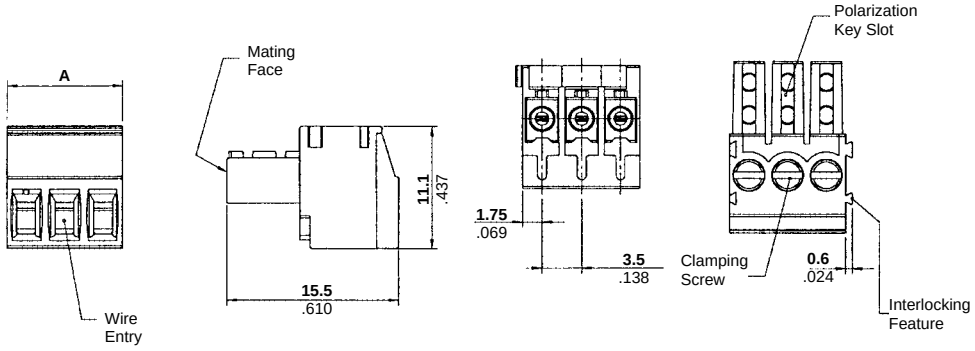

Suggested Screw Torque—
2.2 in.-lb.

No. of Positions	Dim. A	Part Numbers
2	**7.0** [0.276]	284508-2
3	**10.5** [0.413]	284508-3
4	**14.0** [0.551]	284508-4
5	**17.5** [0.689]	284508-5
6	**21.0** [0.827]	284508-6
7	**24.5** [0.965]	284508-7
8	**28.0** [1.102]	284508-8
9	**31.5** [1.240]	284508-9
10	**35.0** [1.378]	1-284508-0
11	**38.5** [1.516]	1-284508-1
12	**42.0** [1.654]	1-284508-2
13	**45.5** [1.791]	1-284508-3

No. of Positions	Dim. A	Part Numbers
14	**49.0** [1.929]	1-284508-4
15	**52.5** [2.067]	1-284508-5
16	**56.0** [2.205]	1-284508-6
17	**59.5** [2.343]	1-284508-7
18	**63.0** [2.480]	1-284508-8
19	**66.5** [2.618]	1-284508-9
20	**70.0** [2.756]	2-284508-0
21	**73.5** [2.894]	2-284508-1
22	**77.0** [3.031]	2-284508-2
23	**80.5** [3.169]	2-284508-3
24	**84.0** [3.307]	2-284508-4
25	**87.5** [3.445]	2-284508-5

Plug, Right-Angle w/Interlock
1.5 mm² Solid Wire
3.81 mm Centerline
Color – Green

UL Rating – 150 V, 10 A
14-30 AWG

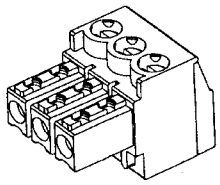

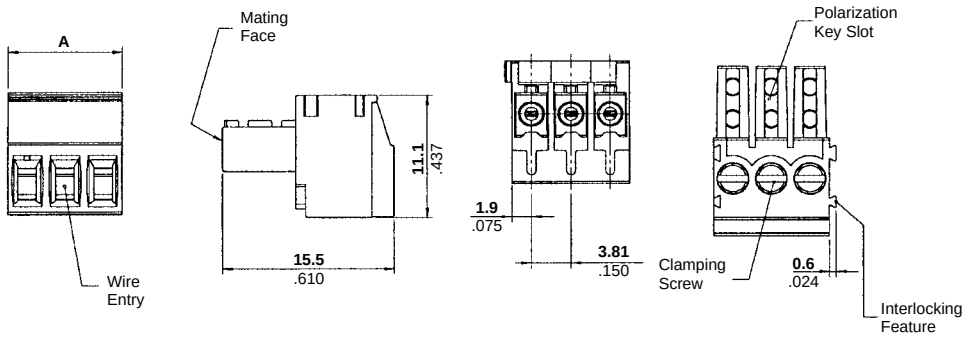

Suggested Screw Torque—
2.2 in.-lb.

No. of Positions	Dim. A	Part Numbers
2	**7.62** [0.300]	284509-2
3	**11.43** [0.450]	284509-3
4	**15.24** [0.600]	284509-4
5	**19.05** [0.750]	284509-5
6	**22.86** [0.900]	284509-6
7	**26.67** [1.050]	284509-7
8	**30.48** [1.200]	284509-8
9	**34.29** [1.350]	284509-9
10	**38.10** [1.500]	1-284509-0
11	**41.91** [1.650]	1-284509-1
12	**45.72** [1.800]	1-284509-2
13	**49.53** [1.950]	1-284509-3

No. of Positions	Dim. A	Part Numbers
14	**53.34** [2.100]	1-284509-4
15	**57.15** [2.250]	1-284509-5
16	**60.96** [2.400]	1-284509-6
17	**64.77** [2.550]	1-284509-7
18	**68.58** [2.700]	1-284509-8
19	**72.39** [2.850]	1-284509-9
20	**86.20** [3.000]	2-284509-0
21	**80.01** [3.150]	2-284509-1
22	**83.82** [3.300]	2-284509-2
23	**87.63** [3.450]	2-284509-3
24	**91.44** [3.600]	2-284509-4
25	**95.25** [3.750]	2-284509-5

Products for Industrial & Commercial Applications

Dimensions are shown for reference purposes only.

Dimensions are in inches and millimeters unless otherwise specified. Values in brackets are metric equivalents.

Specifications subject to change.

Technical Support Center
1-800-522-6752
www.tycoelectronics.com

Straight Plugs

Plug, Straight, 2.5 mm² Solid Wire, 5.0 mm Centerline Color – Gray

UL Rating – 300 V, 12 A
12-30 AWG

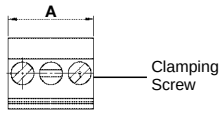

Left-Hand Version

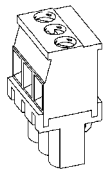

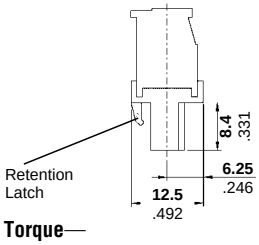

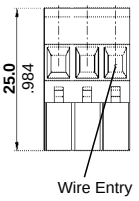

Right-Hand Version

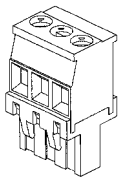

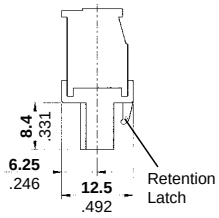

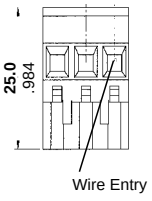

Suggested Screw Torque—
7.1 in.-lbs.

Number of Positions	Dim. A	Wire Entry Part Numbers	
		Left	Right
2	**10.0** [0.394]	284040-2	284046-2
3	**15.0** [0.591]	284040-3	284046-3
4	**20.0** [0.787]	284040-4	284046-4
5	**25.0** [0.984]	284040-5	284046-5
6	**30.0** [1.181]	284040-6	284046-6
7	**35.0** [1.378]	284040-7	284046-7
8	**40.0** [1.575]	284040-8	284046-8
9	**45.0** [1.772]	284040-9	284046-9
10	**50.0** [1.968]	1-284040-0	1-284046-0
11	**55.0** [2.165]	1-284040-1	1-284046-1
12	**60.0** [2.362]	1-284040-2	1-284046-2
13	**65.0** [2.559]	1-284040-3	1-284046-3

Number of Positions	Dim. A	Wire Entry Part Numbers	
		Left	Right
14	**70.0** [2.756]	1-284040-4	1-284046-4
15	**75.0** [2.953]	1-284040-5	1-284046-5
16	**80.0** [3.150]	1-284040-6	1-284046-6
17	**85.0** [3.346]	1-284040-7	1-284046-7
18	**90.0** [3.543]	1-284040-8	1-284046-8
19	**95.0** [3.740]	1-284040-9	1-284046-9
20	**100.0** [3.937]	2-284040-0	2-284046-0
21	**105.0** [4.134]	2-284040-1	2-284046-1
22	**110.0** [4.331]	2-284040-2	2-284046-2
23	**115.0** [4.528]	2-284040-3	2-284046-3
24	**120.0** [4.724]	2-284040-4	2-284046-4
25	**125.0** [4.921]	2-284040-5	2-284046-5

Plug, Straight, 2.5 mm² Solid Wire, 5.08 mm Centerline Color – Gray

UL Rating – 300 V, 12 A
12-30 AWG

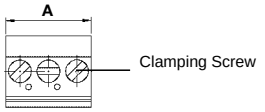

Left-Hand Version

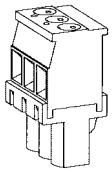

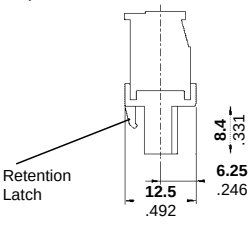

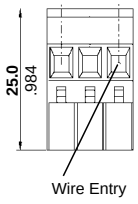

Right-Hand Version

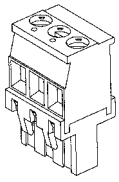

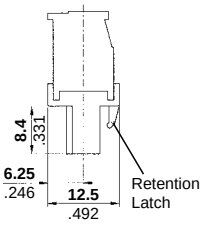

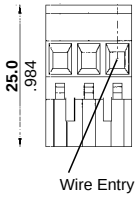

Suggested Screw Torque—
7.1 in.-lbs.

Number of Positions	Dim. A	Wire Entry Part Numbers	
		Left	Right
2	**10.16** [0.400]	284041-2	284047-2
3	**15.24** [0.600]	284041-3	284047-3
4	**20.32** [0.800]	284041-4	284047-4
5	**25.40** [1.000]	284041-5	284047-5
6	**30.48** [1.200]	284041-6	284047-6
7	**35.56** [1.400]	284041-7	284047-7
8	**40.64** [1.600]	284041-8	284047-8
9	**45.72** [1.800]	284041-9	284047-9
10	**50.80** [2.000]	1-284041-0	1-284047-0
11	**55.88** [2.200]	1-284041-1	1-284047-1
12	**60.96** [2.400]	1-284041-2	1-284047-2
13	**66.04** [2.600]	1-284041-3	1-284047-3

Number of Positions	Dim. A	Wire Entry Part Numbers	
		Left	Right
14	**71.12** [2.800]	1-284041-4	1-284047-4
15	**76.20** [3.000]	1-284041-5	1-284047-5
16	**81.28** [3.200]	1-284041-6	1-284047-6
17	**86.36** [3.400]	1-284041-7	1-284047-7
18	**91.44** [3.600]	1-284041-8	1-284047-8
19	**96.52** [3.800]	1-284041-9	1-284047-9
20	**101.60** [4.000]	2-284041-0	2-284047-0
21	**106.68** [4.200]	2-284041-1	2-284047-1
22	**111.76** [4.400]	2-284041-2	2-284047-2
23	**116.84** [4.600]	2-284041-3	2-284047-3
24	**121.92** [4.800]	2-284041-4	2-284047-4
25	**127.00** [5.000]	2-284041-5	2-284047-5

Products for Industrial & Commercial Applications

Dimensions are shown for reference purposes only.

Dimensions are in inches and millimeters unless otherwise specified. Values in brackets are metric equivalents.

Specifications subject to change.

Technical Support Center
1-800-522-6752
www.tycoelectronics.com

Unshrouded Straight Headers

Unshrouded Straight Headers, 5.0 mm Centerline
Color – Gray
UL Rating – 300 V, 12 A
12-30 AWG

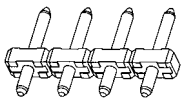

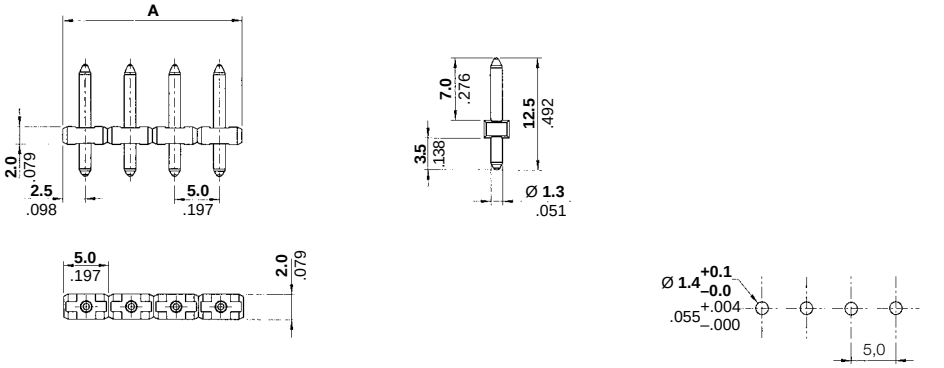

No. of Positions	Dim. A	Part Number
2	**10.0** [0.394]	282832-2
3	**15.0** [0.591]	282832-3
4	**20.0** [0.787]	282832-4
5	**25.0** [0.984]	282832-5
6	**30.0** [1.181]	282832-6
7	**35.0** [1.378]	282832-7
8	**40.0** [1.575]	282832-8
9	**45.0** [1.772]	282832-9
10	**50.0** [1.968]	1-282832-0
11	**55.0** [2.165]	1-282832-1
12	**60.0** [2.362]	1-282832-2
13	**65.0** [2.559]	1-282832-4

No. of Positions	Dim. A	Part Number
14	**70.0** [2.756]	1-282832-5
15	**75.0** [2.953]	1-282832-6
16	**80.0** [3.150]	1-282832-7
17	**85.0** [3.346]	1-282832-8
18	**90.0** [3.543]	1-282832-9
19	**95.0** [3.740]	2-282832-0
20	**100.0** [3.937]	2-282832-1
21	**105.0** [4.134]	2-282832-2
22	**110.0** [4.331]	2-282832-3
23	**115.0** [4.528]	2-282832-4
24	**120.0** [4.724]	2-282832-5
25	**125.0** [4.921]	2-282832-6

Unshrouded Straight Headers, 10.0 mm Centerline
Color – Gray
UL Rating – 300 V, 12 A
12-30 AWG

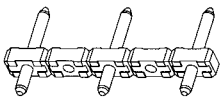

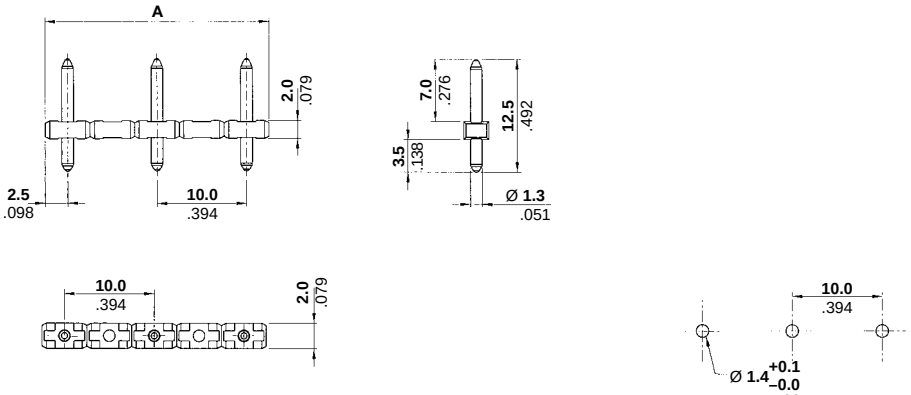

No. of Positions	Dim. A	Part Number
2	**15.0** [0.591]	282833-2
3	**25.0** [0.984]	282833-3
4	**35.0** [1.378]	282833-4
5	**45.0** [1.772]	282833-5
6	**55.0** [2.165]	282833-6

For complete product information, order Catalog 1308389

Products for Industrial & Commercial Applications

Dimensions are shown for reference purposes only.

Dimensions are in inches and millimeters unless otherwise specified. Values in brackets are metric equivalents.

Specifications subject to change.

Technical Support Center
1-800-522-6752
www.tycoelectronics.com

Special Plug Headers

Special 90°/180° Plug Connectors, 1.5 mm² Solid Wire, 5.0 mm Centerline Color – Gray

UL Rating – 300 V, 12 A 14-30 AWG

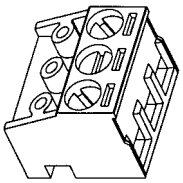

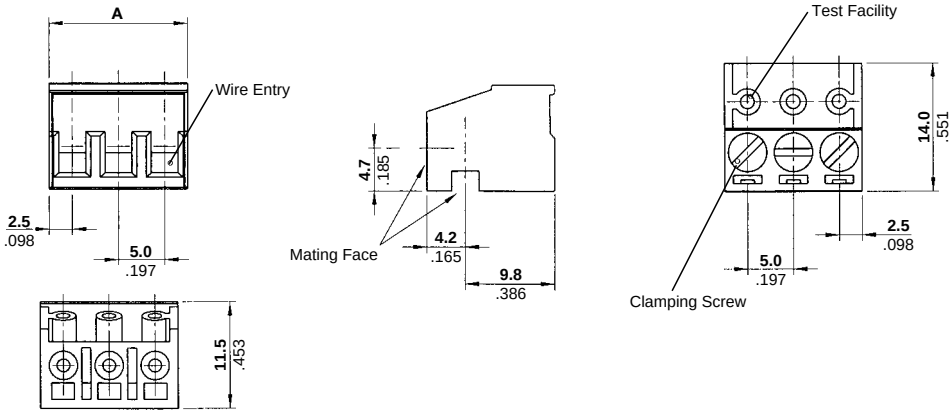

No. of Positions	Dim. A	Part Number
2	**10.0** [0.394]	282830-2
3	**15.0** [0.591]	282830-3
4	**20.0** [0.787]	282830-4
5	**25.0** [0.984]	282830-5
6	**30.0** [1.181]	282830-6
7	**35.0** [1.378]	282830-7
8	**40.0** [1.575]	282830-8
9	**45.0** [1.772]	282830-9
10	**50.0** [1.968]	1-282830-0
11	**55.0** [2.165]	1-282830-1
12	**60.0** [2.362]	1-282830-2
13	**65.0** [2.559]	1-282830-4

No. of Positions	Dim. A	Part Number
14	**70.0** [0.591]	1-282830-5
15	**75.0** [0.787]	1-282830-6
16	**80.0** [0.984]	1-282830-7
17	**85.0** [1.181]	1-282830-8
18	**90.0** [1.378]	1-282830-9
19	**95.0** [1.575]	2-282830-0
20	**100.0** [1.772]	2-282830-1
21	**105.0** [1.968]	2-282830-2
22	**110.0** [2.165]	2-282830-3
23	**115.0** [2.362]	2-282830-4
24	**120.0** [2.362]	2-282830-5
25	**125.0** [2.362]	2-282830-6

Note: Mates only with 282832-xx headers.

Special 90°/270° Plug Connectors 1.5 mm² Solid Wire 5.0 mm Centerline Color – Gray

UL Rating – 300 V, 12 A 12-30 AWG

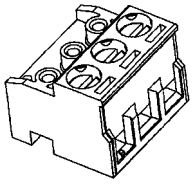

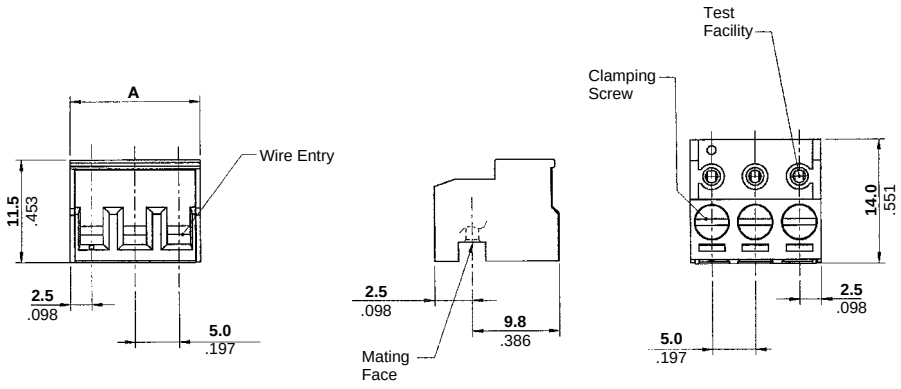

No. of Positions	Dim. A	Part Number
2	**10.0** [0.394]	284393-2
3	**15.0** [0.591]	284393-3
4	**20.0** [0.787]	284393-4
5	**25.0** [0.984]	284393-5
6	**30.0** [1.181]	284393-6
7	**35.0** [1.378]	284393-7
8	**40.0** [1.575]	284393-8
9	**45.0** [1.772]	2849393-9
10	**50.0** [1.968]	1-284393-0
11	**55.0** [2.165]	1-284393-1
12	**60.0** [2.362]	1-284393-2
13	**65.0** [2.559]	1-284393-3

No. of Positions	Dim. A	Part Number
14	**70.0** [0.591]	1-284393-4
15	**75.0** [0.787]	1-284393-5
16	**80.0** [0.984]	1-284393-6
17	**85.0** [1.181]	1-284393-7
18	**90.0** [1.378]	1-284393-8
19	**95.0** [1.575]	1-284393-9
20	**100.0** [1.772]	2-284393-0
21	**105.0** [1.968]	2-284393-1
22	**110.0** [2.165]	2-284393-2
23	**115.0** [2.362]	2-284393-3
24	**120.0** [2.362]	2-284393-4
25	**125.0** [2.362]	2-284393-5

Note: Mates only with 282832-xx headers.

Products for Industrial & Commercial Applications

Dimensions are shown for reference purposes only.

Dimensions are in inches and millimeters unless otherwise specified. Values in brackets are metric equivalents.

Specifications subject to change.

Technical Support Center
1-800-522-6752
www.tycoelectronics.com

Wire Protector Versions

Product Facts

- Modular configuration designed with a dovetail and special detent to provide a more reliable attachment after combining smaller sizes to increase the number of available wire positions
- Accepts various wire ranges from 14-22 AWG
- Exceptional UL Flammability Classification. All are rated to a flammability classification of UL 94V-0. To achieve the UL94V-0 classification, all materials are tested and proven to be self-extinguishing
- UL Recognition File Number E152558
- CSA Certification LR 701875
- Pitches Available
  - 5.0mm and 5.08mm Low Profile
  - Side and top wire entry
    - 3.5mm
    - 3.81mm
    - 5.00mm
    - 5.08mm
  - 5.0mm and 5.08mm 45° wire entry
- Various position sizes available
- Ink marking available
- Other colors available upon request other than those listed in catalog

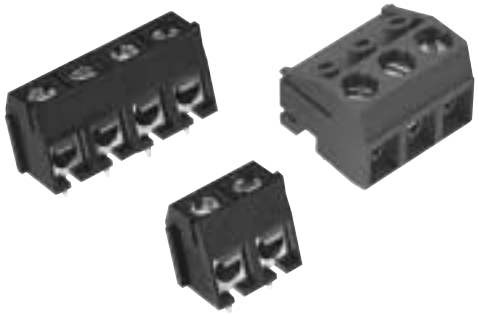

Has full wire guard protection so that the screw does not press directly on the wire. Offers “Lower Profile” terminal block than the cage clamp style. Designed for infrequent terminations.

The screw is able to accommodate both Slot head and Phillips style screwdrivers.



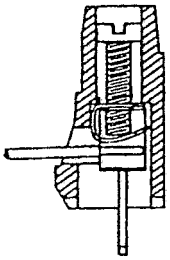

Open

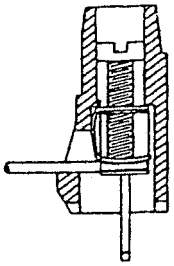

Closed

PCB Mount, Straight, Top Wire Entry Connectors

Terminal Block PCB Mount Top Wire Entry w/Interlock, 3.81mm Pitch (LT) Color – Blue

UL Rating – 250 V, 7 A
18-26 AWG

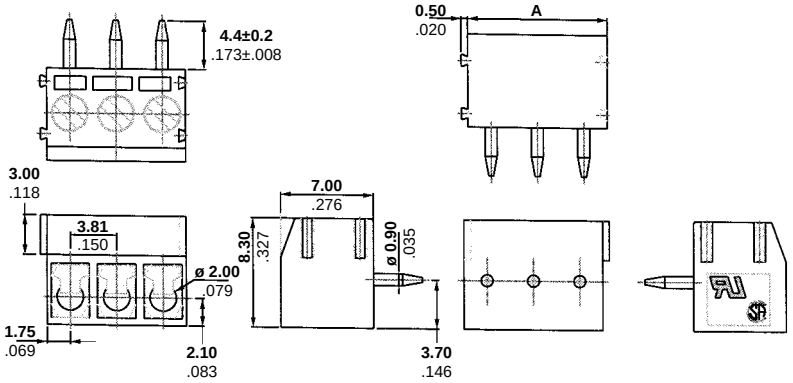

No. of Positions	Dim. A	Part Numbers
2	**7.62** [0.300]	796418-2
3	**11.43** [0.450]	796418-3
4	**15.24** [0.600]	796418-4
5	**19.05** [0.750]	796418-5
6	**22.86** [0.900]	796418-6
7	**26.67** [1.050]	796418-7
8	**30.48** [1.200]	796418-8
9	**34.29** [1.350]	796418-9
10	**38.10** [1.500]	1-796418-0
11	**41.91** [1.650]	1-796418-1
12	**45.72** [1.800]	1-796418-2
13	**49.53** [1.950]	1-796418-3

No. of Positions	Dim. A	Part Numbers
14	**53.34** [2.100]	1-796418-4
15	**57.15** [2.250]	1-796418-5
16	**60.96** [2.400]	1-796418-6
17	**64.77** [2.550]	1-796418-7
18	**68.58** [2.700]	1-796418-8
19	**72.39** [2.850]	1-796418-9
20	**76.20** [3.000]	2-796418-0
21	**80.01** [3.150]	2-796418-1
22	**83.82** [3.300]	2-796418-2
23	**87.63** [3.450]	2-796418-3
24	**91.44** [3.600]	2-796418-4

Terminal Block PCB Mount Top Wire Entry w/Interlock 5.0mm Pitch (LT) Color – Blue

UL Rating – 300 V, 10 A
14-22 AWG

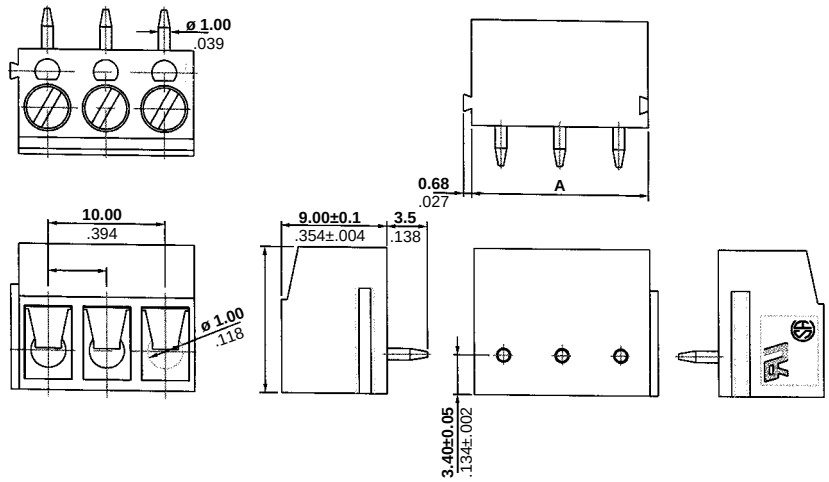

No. of Positions	Dim. A	Part Numbers
2	**10.0** [0.394]	796419-2
3	**15.0** [0.591]	796419-3
4	**20.0** [0.787]	796419-4
5	**25.0** [0.984]	796419-5
6	**30.0** [1.181]	796419-6
7	**35.0** [1.378]	796419-7
8	**40.0** [1.575]	796419-8
9	**45.0** [1.772]	796419-9
10	**50.0** [1.968]	1-796419-0
11	**55.0** [2.165]	1-796419-1
12	**60.0** [2.362]	1-796419-2
13	**65.0** [2.559]	1-796419-3

No. of Positions	Dim. A	Part Numbers
14	**70.0** [2.756]	1-796419-4
15	**75.0** [2.953]	1-796419-5
16	**80.0** [3.150]	1-796419-6
17	**85.0** [3.346]	1-796419-7
18	**90.0** [3.543]	1-796419-8
19	**95.0** [3.740]	1-796419-9
20	**100.0** [3.937]	2-796419-0
21	**105.0** [4.134]	2-796419-1
22	**110.0** [4.331]	2-796419-2
23	**115.0** [4.528]	2-796419-3
24	**120.0** [4.724]	2-796419-4

For complete product information, order Catalog 1308389

Products for Industrial & Commercial Applications

Dimensions are shown for reference purposes only.

Dimensions are in inches and millimeters unless otherwise specified. Values in brackets are metric equivalents.

Specifications subject to change.

Technical Support Center
1-800-522-6752
www.tycoelectronics.com

PCB Mount, Straight, Top Wire Entry Connectors

Terminal Block PCB Mount Top Wire Entry, Low Profile w/Interlock, 5.0 mm Pitch (LT)

UL Rating – 300 V, 10 A
14-22 AWG

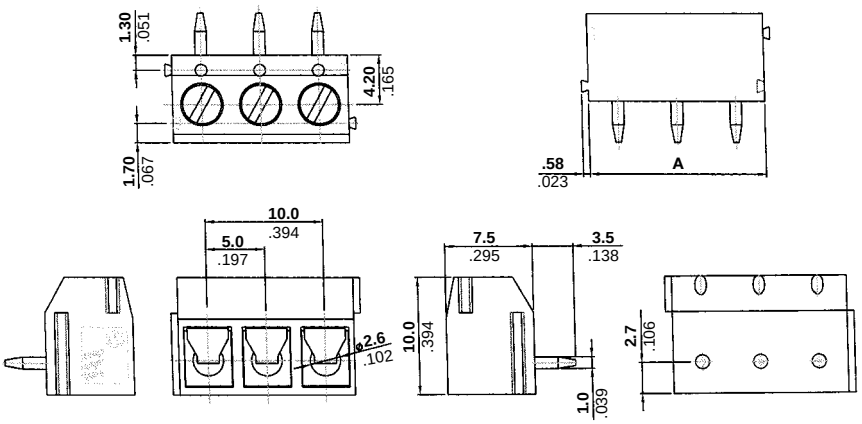

No. of Positions	Dim. A	Part No.	
		Blue	Green
2	**10.0** [0.394]	796420-2	796735-2
3	**15.0** 0.591]	796420-3	796735-3
4	**20.0** [0.787]	796420-4	796735-4
5	**25.0** [0.984]	796420-5	796735-5
6	**30.0** [1.181]	796420-6	796735-6
7	**35.0** [1.378]	796420-7	796735-7
8	**40.0** [1.575]	796420-8	796735-8
9	**45.0** [1.772]	796420-9	796735-9
10	**50.0** [1.968]	1-796420-0	1-796735-0
11	**55.0** [2.165]	1-796420-1	1-796735-1
12	**60.0** [2.362]	1-796420-2	1-796735-2
13	**65.0** [2.559]	1-796420-3	1-796735-3

No. of Positions	Dim. A	Part No.	
		Blue	Green
14	**70.0** [0.591]	1-796420-4	1-796735-4
15	**75.0** [0.787]	1-796420-5	1-796735-5
16	**80.0** [0.984]	1-796420-6	1-796735-6
17	**85.0** [1.181]	1-796420-7	1-796735-7
18	**90.0** [1.378]	1-796420-8	1-796735-8
19	**95.0** [1.575]	1-796420-9	1-796735-9
20	**100.0** [1.772]	2-796420-0	2-796735-0
21	**105.0** [1.968]	2-796420-1	2-796735-1
22	**110.0** [2.165]	2-796420-2	2-796735-2
23	**115.0** [2.362]	2-796420-3	2-796735-3
24	**120.0** [2.362]	2-796420-4	2-796735-4

Terminal Block PCB Mount Top Wire Entry, Low Profile w/Interlock 5.08 mm Pitch (LT) Color – Blue

UL Rating – 300 V, 10 A
14-22 AWG

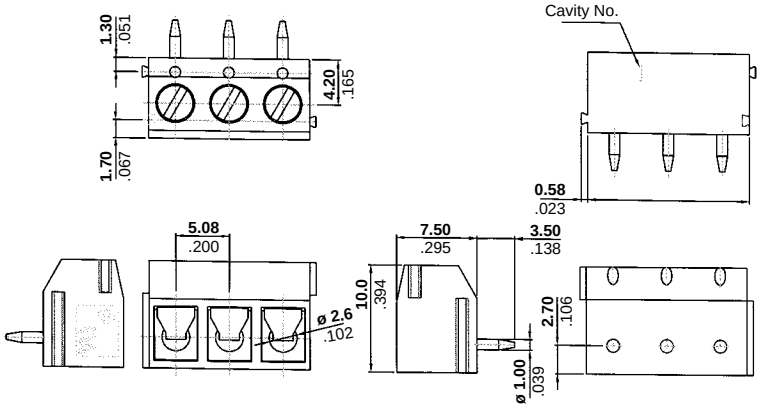

No. of Positions	Dim. A	Part Numbers
2	**10.16** [0.400]	796421-2
3	**15.24** [0.600]	796421-3
4	**20.32** [0.800]	796421-4
5	**25.40** [1.000]	796421-5
6	**30.48** [1.200]	796421-6
7	**35.56** [1.400]	796421-7
8	**40.64** [1.600]	796421-8
9	**45.72** [1.800]	796421-9
10	**50.80** [2.000]	1-796421-0
11	**55.88** [2.200]	1-796421-1
12	**60.96** [2.400]	1-796421-2
13	**66.04** [2.600]	1-796421-6

No. of Positions	Dim. A	Part Numbers
14	**71.12** [2.800]	1-796421-7
15	**76.20** [3.000]	1-796421-8
16	**81.28** [3.200]	1-796421-9
17	**86.36** [3.400]	2-796421-0
18	**91.44** [3.600]	2-796421-1
19	**96.52** [3.800]	2-796421-2
20	**101.60** [4.000]	2-796421-3
21	**106.68** [4.200]	2-796421-4
22	**111.76** [4.400]	2-796421-5
23	**116.84** [4.600]	2-796421-6
24	**121.92** [4.800]	2-796421-7

For complete product information, order Catalog 1308389

Products for Industrial & Commercial Applications

Dimensions are shown for reference purposes only.

Dimensions are in inches and millimeters unless otherwise specified. Values in brackets are metric equivalents.

Specifications subject to change.

Technical Support Center
1-800-522-6752
www.tycoelectronics.com

PCB Mount, Straight, Side Wire Entry Connectors

Terminal Block PCB Mount Top Wire Entry w/Interlock 3.5mm Pitch (LT) Color – Blue

UL Rating – 250 V, 7 A 18-26 AWG

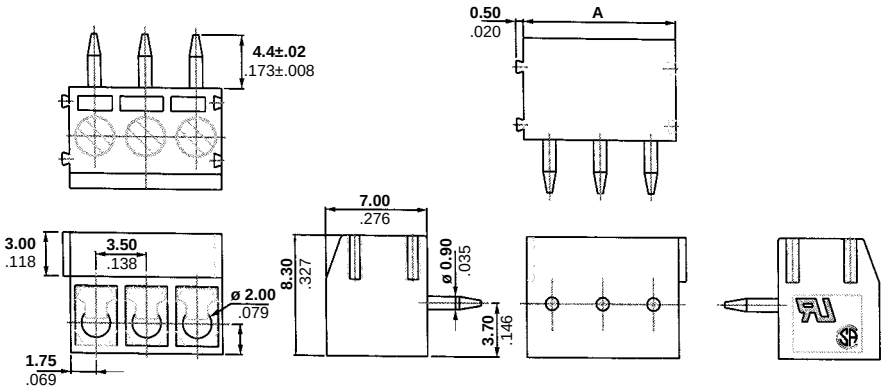

No. of Positions	Dim. A	Part Numbers
2	**7.0** [0.276]	796417-2
3	**10.5** [0.413]	796417-3
4	**14.0** [0.551]	796417-4
5	**17.5** [0.689]	796417-5
6	**21.0** [0.827]	796417-6
7	**24.5** [0.965]	796417-7
8	**28.0** [1.102]	796417-8
9	**31.5** [1.240]	796417-9
10	**35.0** [1.378]	1-796417-0
11	**38.5** [1.516]	1-796417-1
12	**42.0** [1.654]	1-796417-2
13	**45.5** [1.791]	1-796417-3

No. of Positions	Dim. A	Part Numbers
14	**49.0** [1.929]	1-796417-4
15	**52.5** [2.067]	1-796417-5
16	**56.0** [2.205]	1-796417-6
17	**59.5** [2.343]	1-796417-7
18	**63.0** [2.480]	1-796417-8
19	**66.5** [2.618]	1-796417-9
20	**70.0** [2.756]	2-796417-0
21	**73.5** [2.894]	2-796417-1
22	**77.0** [3.031]	2-796417-2
23	**80.5** [3.169]	2-796417-3
24	**84.0** [3.307]	2-796417-4

Terminal Block PCB Mount Side Wire Entry w/Interlock 3.5mm Pitch (LT) Color – Blue

UL Rating – 250 V, 7 A 18-26 AWG

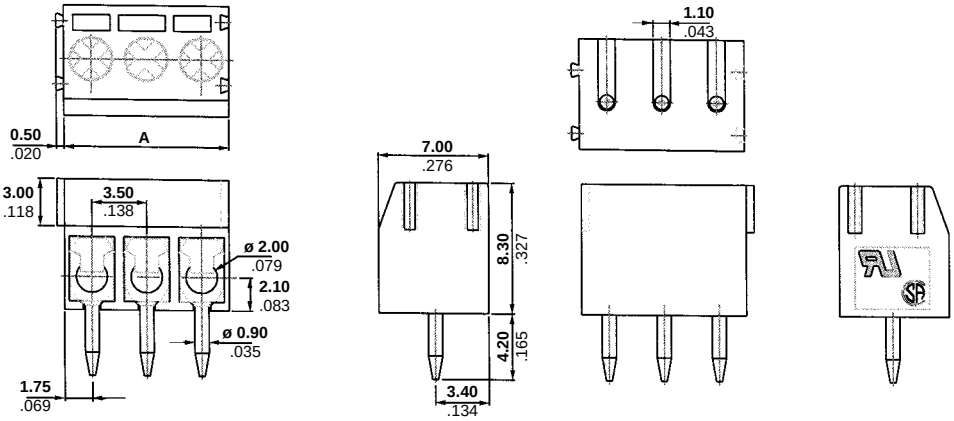

No. of Positions	Dim. A	Part Numbers
2	**7.00** [0.276]	796414-2
3	**10.50** [0.413]	796414-3
4	**14.00** [0.551]	796414-4
5	**17.50** [0.689]	796414-5
6	**21.00** [0.827]	796414-6
7	**24.50** [0.965]	796414-7
8	**28.00** [1.102]	796414-8
9	**31.50** [1.240]	796414-9
10	**35.00** [1.378]	1-796414-0
11	**38.50** [1.516]	1-796414-1
12	**42.00** [1.654]	1-796414-2
13	**45.50** [1.791]	1-796414-3

No. of Positions	Dim. A	Part Numbers
14	**49.00** [1.929]	1-796414-4
15	**52.50** [2.067]	1-796414-5
16	**54.00** [2.126]	1-796414-6
17	**57.50** [2.264]	1-796414-7
18	**61.00** [2.402]	1-796414-8
19	**64.50** [2.539]	1-796414-9
20	**68.00** [2.677]	2-796414-0
21	**71.50** [2.815]	2-796414-1
22	**75.00** [2.953]	2-796414-2
23	**78.50** [3.091]	2-796414-3
24	**82.00** [3.228]	2-796414-4

For complete product information, order Catalog 1308389

Products for Industrial & Commercial Applications

Dimensions are shown for reference purposes only.

Dimensions are in inches and millimeters unless otherwise specified. Values in brackets are metric equivalents.

Specifications subject to change.

Technical Support Center
1-800-522-6752
www.tycoelectronics.com

PCB Mount, Straight, Side Wire Entry Connectors

Terminal Block PCB Mount Side Wire Entry w/Interlock 3.81mm Pitch (LT) Color – Blue

UL Rating – 300 V, 10 A
14-22 AWG

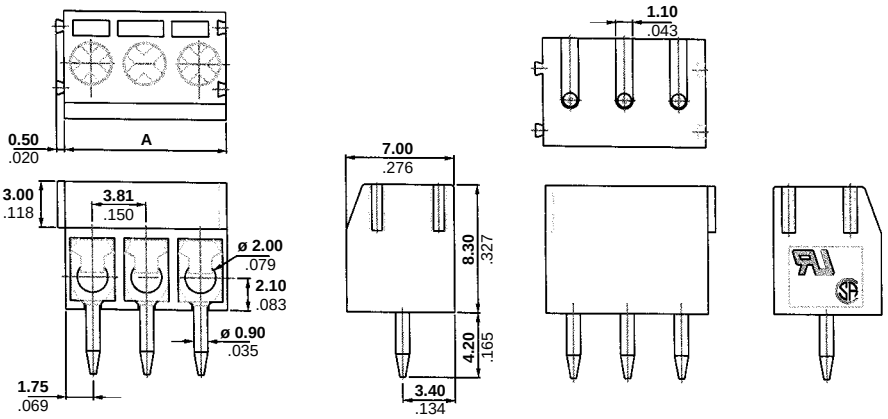

No. of Positions	Dim. A	Part Numbers
2	**7.62** [0.300]	796415-2
3	**11.43** [0.450]	796415-3
4	**14.00** [0.551]	796415-4
5	**17.50** [0.689]	796415-5
6	**21.00** [0.827]	796415-6
7	**24.50** [0.965]	796415-7
8	**28.00** [1.102]	796415-8
9	**31.50** [1.240]	796415-9
10	**35.00** [1.378]	1-796415-0
11	**38.50** [1.516]	1-796415-1
12	**42.00** [1.654]	1-796415-2
13	**45.50** [1.791]	1-796415-3

No. of Positions	Dim. A	Part Numbers
14	**49.00** [1.929]	1-796415-4
15	**52.50** [2.067]	1-796415-5
16	**54.00** [2.126]	1-796415-6
17	**57.50** [2.264]	1-796415-7
18	**61.00** [4.202]	1-796415-8
19	**64.50** [2.539]	1-796415-9
20	**68.00** [2.677]	2-796415-0
21	**71.50** [2.815]	2-796415-1
22	**75.00** [2.953]	2-796415-2
23	**78.50** [3.091]	2-796415-3
24	**82.00** [3.228]	2-796414-4

Terminal Block PCB Mount Side Wire Entry, Low Profile w/Interlock, 5.0 mm Pitch (LT)

UL Rating – 300 V, 10 A
14-22 AWG

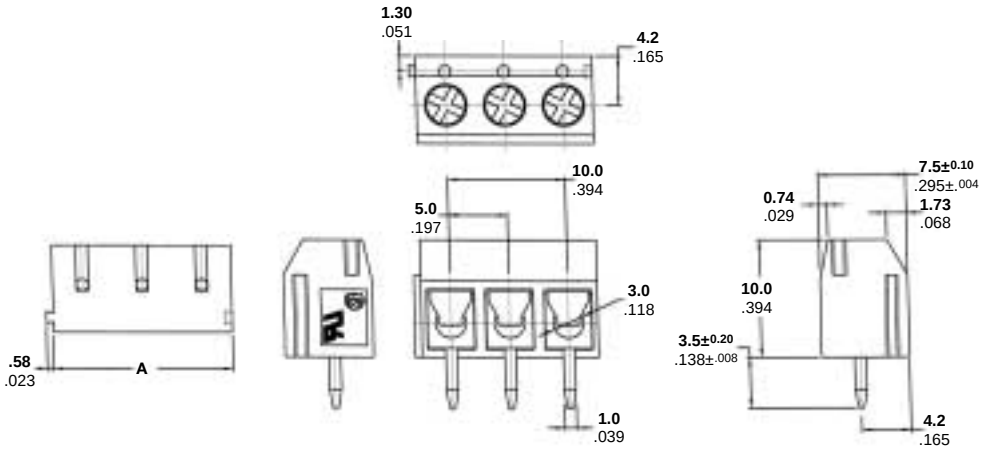

No. of Positions	Dim. A	Part No.	
		Blue	Green
2	**10.0** [0.394]	796712-2	796734-2
3	**15.0** [0.591]	796712-3	796734-3
4	**20.0** [0.787]	796712-4	796734-4
5	**25.0** [0.984]	796712-5	796734-5
6	**30.0** [1.181]	796712-6	796734-6
7	**35.0** [1.378]	796712-7	796734-7
8	**40.0** [1.575]	796712-8	796734-8
9	**45.0** [1.772]	796712-9	796734-9
10	**50.0** [1.968]	1-796712-0	1-796734-0
11	**55.0** [2.165]	1-796712-1	1-796734-1
12	**60.0** [2.362]	1-796712-2	1-796734-2
13	**65.0** [2.559]	1-796712-3	1-796734-3

No. of Positions	Dim. A	Part No.	
		Blue	Green
14	**70.0** [0.591]	1-796712-4	1-796734-4
15	**75.0** [0.787]	1-796712-5	1-796734-5
16	**80.0** [0.984]	1-796712-6	1-796734-6
17	**85.0** [1.181]	1-796712-7	1-796734-7
18	**90.0** [1.378]	1-796712-8	1-796734-8
19	**95.0** [1.575]	1-796712-9	1-796734-9
20	**100.0** [1.772]	2-796712-0	2-796734-0
21	**105.0** [1.968]	2-796712-1	2-796734-1
22	**110.0** [2.165]	2-796712-2	2-796734-2
23	**115.0** [2.362]	2-796712-3	2-796734-3
24	**120.0** [2.362]	2-796712-4	2-796734-4

Products for Industrial & Commercial Applications

Dimensions are shown for reference purposes only.

Dimensions are in inches and millimeters unless otherwise specified. Values in brackets are metric equivalents.

Specifications subject to change.

Technical Support Center
1-800-522-6752
www.tycoelectronics.com

PCB Mount, Straight, Side Wire Entry Connectors

Terminal Block PCB Mount Straight, Side Wire Entry w/Interlock 5.00mm Pitch (LT) Color – Blue

UL Rating – 300 V, 10 A 14-22 AWG

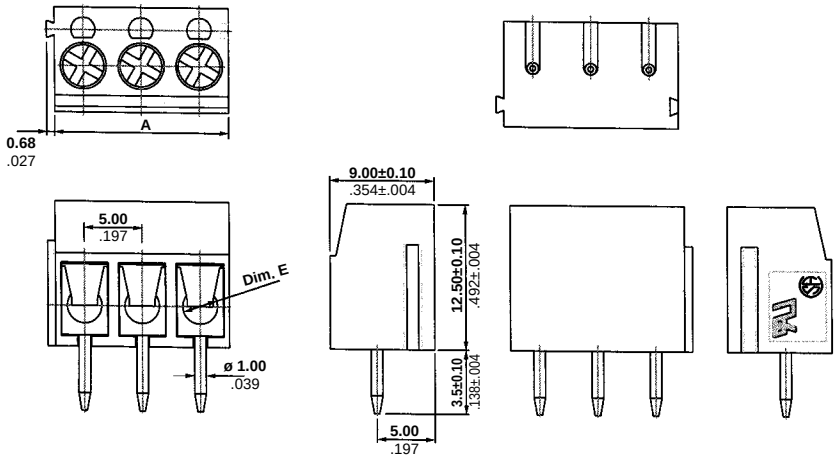

No. of Positions	Dim. A	Part Numbers
2	**10.00** [0.394]	796416-2
3	**15.00** [0.591]	796416-3
4	**20.00** [0.787]	796416-4
5	**25.00** [0.984]	796416-5
6	**30.00** [1.181]	796416-6
7	**35.00** [1.378]	796416-7
8	**40.00** [1.575]	796416-8
9	**45.00** [1.772]	796416-9
10	**50.00** [1.969]	1-796416-0
11	**55.00** [2.165]	1-796416-1
12	**60.00** [2.362]	1-796416-2
13	**65.00** [2.559]	1-796416-3

No. of Positions	Dim. A	Part Numbers
14	**70.00** [2.756]	1-796416-4
15	**75.00** [2.953]	1-796416-5
16	**80.00** [3.150]	1-796416-6
17	**85.00** [3.346]	1-796416-7
18	**90.00** [3.543]	1-796416-8
19	**95.00** [3.740]	1-796416-9
20	**100.00** [3.937]	2-796416-0
21	**105.00** [4.134]	2-796416-1
22	**110.00** [4.331]	2-796416-2
23	**115.00** [4.525]	2-796416-3
24	**120.00** [4.724]	2-796416-4

Terminal Block PCB Mount Side Wire Entry, Low Profile w/Interlock, 5.08 mm Pitch (LT) Color – Blue

UL Rating – 300 V, 10 A 14-22 AWG

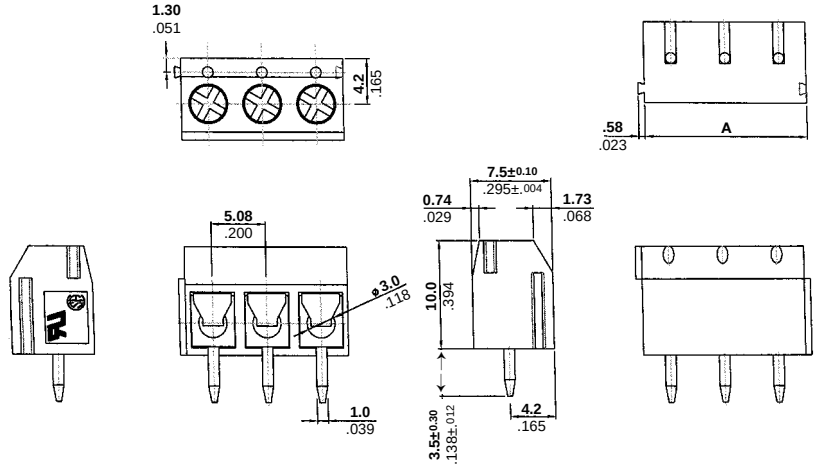

No. of Positions	Dim. A	Part No.
2	**10.16** [0.400]	796410-2
3	**15.24** [0.600]	796410-3
4	**20.32** [0.800]	796410-4
5	**25.40** [1.000]	796410-5
6	**30.48** [1.200]	796410-6
7	**35.56** [1.400]	796410-7
8	**40.64** [1.600]	796410-8
9	**45.72** [1.800]	796410-9
10	**50.80** [2.000]	1-796410-0
11	**55.88** [2.200]	1-796410-1
12	**60.96** [2.400]	1-796410-2
13	**66.04** [2.600]	1-796410-3

No. of Positions	Dim. A	Part No.
14	**71.12** [2.800]	1-796410-4
15	**76.20** [3.000]	1-796410-5
16	**81.28** [3.200]	1-796410-6
17	**86.36** [3.400]	1-796410-7
18	**91.44** [3.600]	1-796410-8
19	**96.52** [3.800]	1-796410-9
20	**101.60** [4.000]	2-796410-0
21	**106.68** [4.200]	2-796410-1
22	**111.76** [4.400]	2-796410-2
23	**116.84** [4.600]	2-796410-3
24	**121.92** [4.800]	2-796410-4

45° Wire Inlet Connectors

UPDATED 11/01

Terminal Block
45° Wire Inlet w/Interlock
5.00 mm Pitch (LT)
Color – Blue

UL Rating – 300 V, 10 A
14-22 AWG

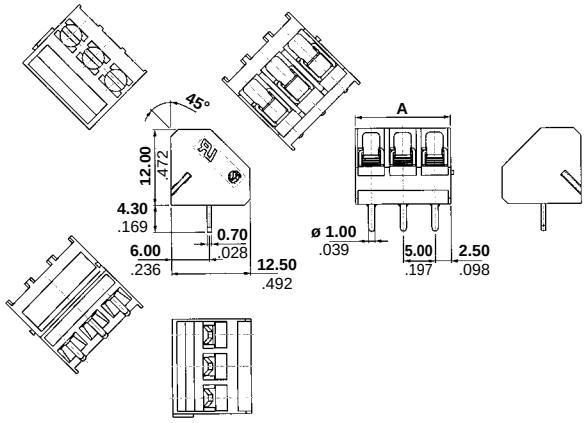

No. of Positions	Dim. A	Part Numbers
2	**10.00** [0.394]	796422-2
3	**15.00** [0.591]	796422-3
4	**20.00** [0.787]	796422-4
5	**25.00** [0.984]	796422-5
6	**30.00** [1.181]	796422-6
7	**35.00** [1.378]	796422-7
8	**40.00** [1.575]	796422-8
9	**45.00** [1.772]	796422-9
10	**50.00** [1.969]	1-796422-0
11	**55.00** [2.165]	1-796422-1
12	**60.00** [2.362]	1-796422-2
13	**65.00** [2.559]	1-796422-3

No. of Positions	Dim. A	Part Numbers
14	**70.00** [2.756]	1-796422-4
15	**75.00** [2.953]	1-796422-5
16	**80.00** [3.150]	1-796422-6
17	**85.00** [3.346]	1-796422-7
18	**90.00** [3.543]	1-796422-8
19	**95.00** [3.740]	1-796422-9
20	**100.00** [3.937]	2-796422-0
21	**105.00** [4.134]	2-796422-1
22	**110.00** [4.331]	2-796422-2
23	**115.00** [4.528]	2-796422-3
24	**120.00** [4.724]	2-796422-4

Terminal Block
45° Wire Inlet w/Interlock
5.08 mm Pitch (LT)
Color – Blue

UL Rating – 300 V, 10 A
14-22 AWG

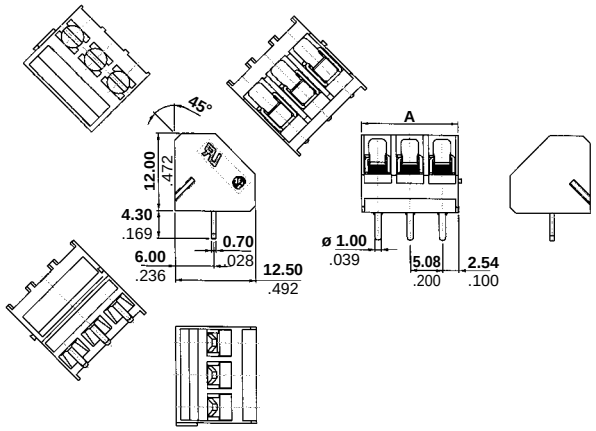

No. of Positions	Dim. A	Part Numbers
2	**10.16** [0.400]	796423-2
3	**15.24** [0.600]	796423-3
4	**20.32** [0.800]	796423-4
5	**25.40** [1.000]	796423-5
6	**30.48** [1.200]	796423-6
7	**35.56** [1.400]	796423-7
8	**40.64** [1.600]	796423-8
9	**45.72** [1.800]	796423-9
10	**50.80** [2.000]	1-796423-0
11	**55.88** [2.200]	1-796423-1
12	**60.96** [2.400]	1-796423-2
13	**66.04** [2.600]	1-796423-3

No. of Positions	Dim. A	Part Numbers
14	**71.12** [2.800]	1-796423-4
15	**76.20** [3.000]	1-796423-5
16	**81.28** [3.200]	1-796423-6
17	**86.36** [3.400]	1-796423-7
18	**91.44** [3.600]	1-796423-8
19	**96.52** [3.800]	1-796423-9
20	**101.60** [4.000]	2-796423-0
21	**106.68** [4.200]	2-796423-1
22	**111.76** [4.400]	2-796423-2
23	**116.84** [4.600]	2-796423-3
24	**121.92** [4.800]	2-796423-4

2.5MM SURFACE MOUNT TECHNOLOGY WITH WIRE TRAP SERIES SMC

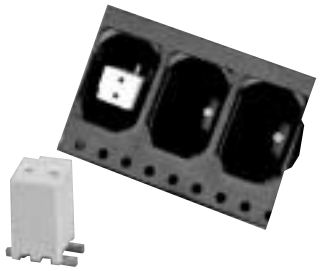

2.5mm Pitch

Physical Properties

Housing:

Housing Material: Polyphenylene Sulfide (PPS)
Flammability: UL94V-0
Color: Black

Terminal:

Contact: Phosphor bronze, tin plated over nickel

Mechanical:

Pitch (terminal spacing): 2.5mm
Wire Strip Length: 0.22" min, 0.28" max
Max. Wire Insulation Diameter: 1.7mm
Packaging: Tape and reel and loose piece

Electrical Properties:

Maximum Current: 3A
Operating Voltage: 250V
Wire Range: 24 AWG, stranded tin
Dielectric Withstand: 1500 VAC

Environmental Properties:

Max. Operating Temperature: 105° C

Surface Mount with Wire Trap

Product Facts

- **Available in 2.5mm pitch**
- **Accepts 24 AWG stranded tin**
- **2 position Connector**
- **Current capability: 3A**
- **250V**
- **Packaging: Tape and Reel and Loose Piece (25 pcs/bag)**

Note: Before ordering, see Cross Reference in Section 15 for equivalent Tyco Electronics Part Number.

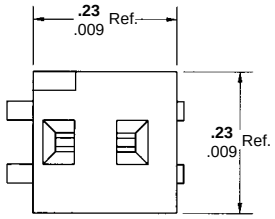

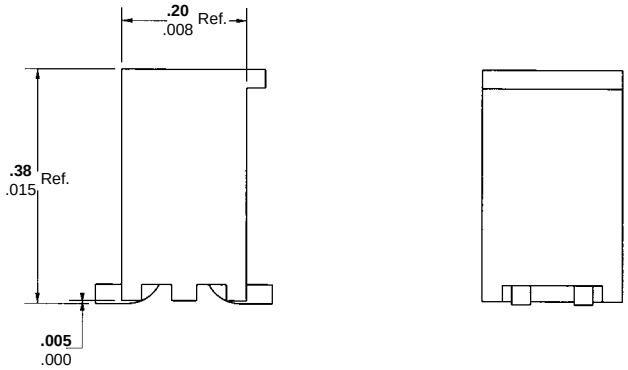

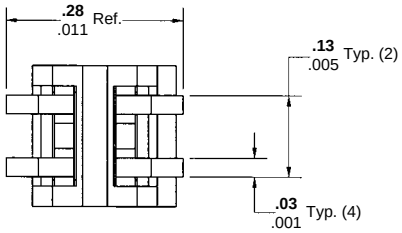

Ordering Information

# OF TERMINALS	CATALOG NUMBER	DESCRIPTION
2	SMC2402	Tape & Reel, 500 pieces
2	SM2V02	25 pieces

For complete product information, order Catalog 1308389

Products for Industrial & Commercial Applications

Dimensions are shown for reference purposes only.

Dimensions are in inches and millimeters unless otherwise specified. Values in brackets are metric equivalents.

Specifications subject to change.

Technical Support Center
1-800-522-6752
www.tycoelectronics.com

Screwless Terminal Blocks

Product Facts

- Available in 5.0mm and 5.08mm pitch sizes
- Accepts wire range 14-22 AWG
- Current capability: 10 A and 20 A (5.08mm lever version)
- Vertical and right-angle wire insertion provides options to meet different application needs
- No special tool required, levers could be easily actuated with a finger or a screwdriver
- Screwless saves time when installing wires
- UL Recognition
- CSA Certification



5.0 mm and 5.08 mm Pitch
(Page 8049)



5.08 mm Pitch
(Page 8048)

5.08MM STANDARD CONNECTORS WITH SCREWLESS CLAMP SERIES 2SV

Physical Properties

Housing:

Housing Material: Thermoplastic polyester
Flammability: UL94V-0
Color: Black

Terminal:

Clamping Terminal and Solder Pin: Bright acid-tin over copper alloy

Mechanical:

Pitch (terminal spacing): 5.08mm
Recommended PCB Hole Dia.: 1.4mm

Electrical Properties

Maximum Current: 20 A
Operating Voltage: 150/300V (limited ratings)
Wire Range: 18-22 AWG

Environmental Properties

Max. Operating Temperature: 130°C

Note: Before ordering, see Cross Reference in Section 15 for equivalent Tyco Electronics Part Number.

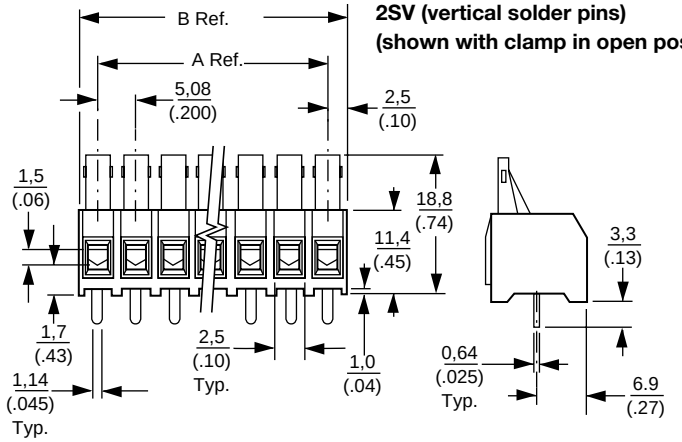

2SV (vertical solder pins)
(shown with clamp in open position)

Screwless Terminal Blocks are suitable for both solid and stranded wires and offers a fast way to complete wire connections. The lever is fully integrated into the body of the terminal block, which means no special tools are required.

The spring is made from stainless steel strip so that there is a strong connection.

Ordering Information

# OF TERMINALS	"A" LENGTH (INCHES)MM	"B" LENGTH (INCHES)MM	CATALOG NUMBER
2	(0.2) 5,1	(0 .4)10,2	2SV-02
3	(0.4) 10,2	(0 .6) 15,2	2SV-03
4	(0.6) 15,2	(0 .8) 20,3	2SV-04
5	(0.8) 20,3	(1.0) 25,4	2SV-05
6	(1.0) 25,4	(1.2) 30,5	2SV-06
7	(1.2) 30,5	(1.4) 35,6	2SV-07
8	(1.4) 35,6	(1.6) 40,6	2SV-08
9	(1.6) 40,6	(1.8) 45,7	2SV-09
10	(1.8) 45,7	(2.0) 50,8	2SV-10
11	(2.0) 50,8	(2.2) 55,9	2SV-11
12	(2.2) 55,9	(2.4) 61,0	2SV-12
13	(2.4) 61,0	(2.6) 66,0	2SV-13
14	(2.6) 66,0	(2.8) 71,1	2SV-14
15	(2.8) 71,1	(3.0) 76,2	2SV-15
16	(3.0) 76,2	(3.2) 81,3	2SV-16

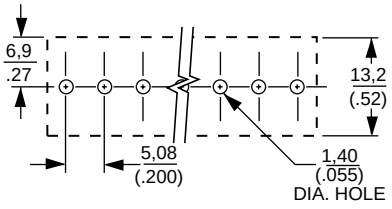

For complete product information, order Catalog 1308389

Products for Industrial & Commercial Applications

Dimensions are shown for reference purposes only.

Dimensions are in inches and millimeters unless otherwise specified. Values in brackets are metric equivalents.

Specifications subject to change.

Technical Support Center
1-800-522-6752
www.tycoelectronics.com

Screwless, Top Wire Entry Connectors

Board Mount Screwless 5.0 mm Pitch Top Wire Entry Terminal Block Color – Green

UL Rating – 300 V, 10 A
14-22 AWG

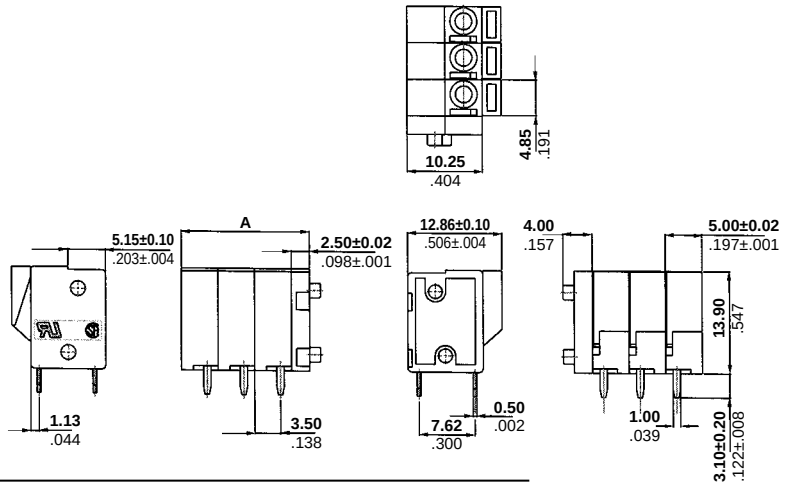

No. of Positions	Dim. A	Part Numbers
2	**12.50** [0.492]	796460-2
3	**17.50** [0.689]	796460-3
4	**22.50** [0.886]	796460-4
5	**27.50** [1.083]	796460-5
6	**32.50** [1.280]	796460-6
7	**37.50** [1.476]	796460-7
8	**42.50** [1.673]	796460-8
9	**47.50** [1.870]	796460-9
10	**52.20** [2.055]	1-796460-0
11	**57.50** [2.264]	1-796460-1
12	**62.50** [2.461]	1-796460-2

Board Mount Screwless 5.08 mm Pitch Top Wire Entry Terminal Block Color – Green

UL Rating – 300 V, 10 A
14-22 AWG

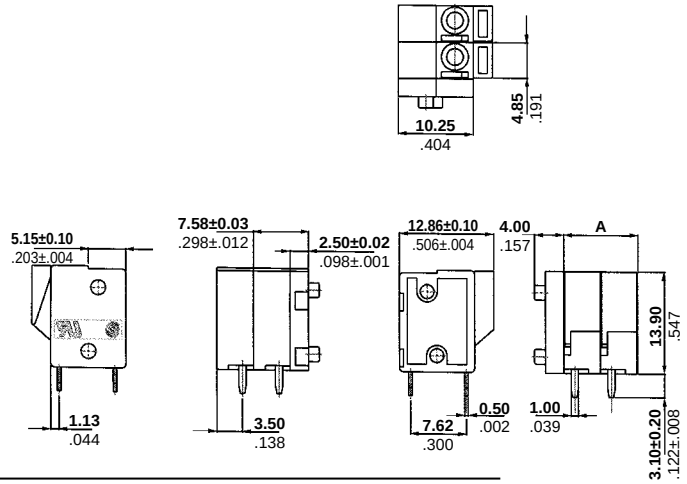

No. of Positions	Dim. A	Part Numbers
2	**10.16** [0.400]	796461-2
3	**15.24** [0.600]	796461-3
4	**20.32** [0.800]	796461-4
5	**25.40** [1.000]	796461-5
6	**30.48** [1.200]	796461-6
7	**35.56** [1.400]	796461-7
8	**40.64** [1.600]	796461-8
9	**45.72** [1.800]	796461-9
10	**50.80** [2.000]	1-796461-0
11	**55.88** [2.200]	1-796461-1
12	**60.96** [2.400]	1-796461-2

For complete product information, order Catalog 1308389

Products for Industrial & Commercial Applications

Dimensions are shown for reference purposes only.

Dimensions are in inches and millimeters unless otherwise specified. Values in brackets are metric equivalents.

Specifications subject to change.

Technical Support Center
1-800-522-6752
www.tycoelectronics.com

Barrier Strip Selector Chart

TRI-BARRIER



	0.250"	0.325"	0.325"	0.375"	0.375"	0.375"	0.375"	0.4375"
Series	#3	#4	RSB3	#6	RSB6	BC6	MB6	#8
Pitch (in)	0.250"	0.325"	0.325"	0.375"	0.375"	0.375"	0.375"	0.4375"
Circuits	2-32	2-30	2-36	2-30	2-36	2-16	4-40	2-26
Max Current	10A	20A	15A	25A	20A	20A	25A	30A
Max Voltage	150V/300V	150V/300V	300V	300V	300V	300V	300V	300V
Wire Range (AWG)	18-22	14-22	14-26	12-22	12-26	12-22	12-22	10-18
Description	Molded to length	Molded to length	Cut to length	Molded to length	Cut to length	Panel Mount molded to length	Double Level snapped to length	Molded to length
Page	8052-8055	8056-8058	Order Catalog 1308389	Order Catalog 1308389	Order Catalog 1308389	8059, 8060	8061, 8062	8063-8065

For complete product information, order Catalog 1308389

Products for Industrial & Commercial Applications

Dimensions are shown for reference purposes only.

Dimensions are in inches and millimeters unless otherwise specified. Values in brackets are metric equivalents.

Specifications subject to change.

Technical Support Center
1-800-522-6752
www.tycoelectronics.com

Barrier Strip Selector Chart (Continued)

	DUAL-BARRIER						SOCKETS	
								
	0.325”	0.325”	0.375”	0.375”	0.375”	0.4375”	0.325”	0.375”
Series	SSB3	4DB	SSB6	JC6	NC6	SSB7	USB	RSB6B
Pitch (in)	0.325”	0.325”	0.375”	0.375”	0.375”	0.4375”	0.325”	0.375”
Circuits	2-36	2-30	2-32	2-16	2-30	2-27	2-12	2-10
Max Current	15A	20A	20A	20A	20A	20A	10A	10A
Max Voltage	300V	150V/300V	300V	300V	300V	600V	300V	300V
Wire Range (AWG)	14-26	14-22	12-26	12-22	12-22	12-26	n/a	n/a
Description	Cut to length	Molded to length	Cut to length	Molded to length	Low Profile version, Molded to length	Cut to length	For Series RSB3 & SSB3	For Series RSB6
Page	Order Catalog 1308389	8066, 8067	Order Catalog 1308389	Order Catalog 1308389	8068, 8069	8070-8074	8075	8076

For complete product information, order Catalog 1308389

Products for Industrial & Commercial Applications

Dimensions are shown for reference purposes only.

Dimensions are in inches and millimeters unless otherwise specified. Values in brackets are metric equivalents.

Specifications subject to change.

Technical Support Center
1-800-522-6752
www.tycoelectronics.com

0.250" Pitch, Series #3

Physical Properties

Housing Material: Polypropylene
Flammability: UL94V-0
Color: Black

Terminal

Terminals: Bright acid tin over copper alloy
Screws: #3-48 steel, zinc plating with clear chromate coating. Wire clamping screws standard.

Mechanical

Pitch (Terminal Spacing): 0.250"
Recommended PCB Hole Dia.: 1.8mm (.073")
Recommended Tightening Torque: 5.5 in.-lbs.

Electrical Properties

Maximum Current: 10A
Operating Voltage: 150V (limited rating)
Wire Range: 18-22 AWG

Environmental Properties

Operating Temperature Range: 105°C max.

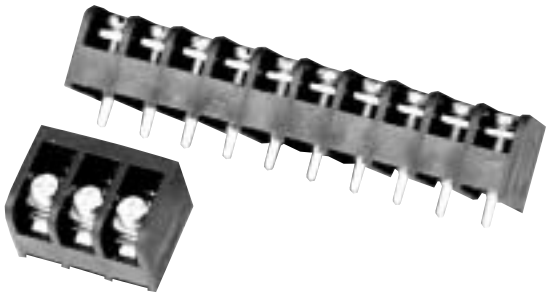

3PCV-03 & 3PCV-10

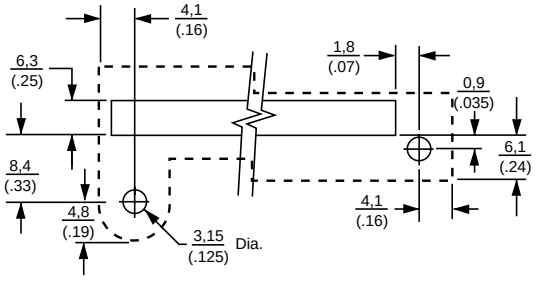

RIGHT ANGLE VERTICAL
MOUNTING PANEL LAYOUT

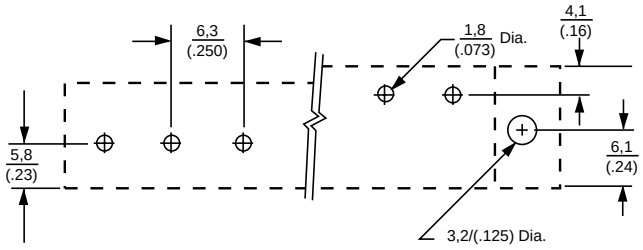

RIGHT ANGLE CENTER
PRINTED CIRCUIT LAYOUT

LR30811 E54800

For complete product information, order Catalog 1308389

Products for Industrial & Commercial Applications

Dimensions are shown for reference purposes only.

Dimensions are in inches and millimeters unless otherwise specified. Values in brackets are metric equivalents.

Specifications subject to change.

Technical Support Center
1-800-522-6752
www.tycoelectronics.com

0.250" Pitch, Series #3

ORDERING INFORMATION

3 PCV - 04 - 004
Ⓐ Ⓑ Ⓒ Ⓓ

Ⓐ **Screw Size Spacing**
3 = #3-48 on .250" Centers

Ⓑ **Terminal Style**
PCV = Printed Circuit Pin, Vertical
PCR = Printed Circuit, Right Angle
STV = Solder Turret, Vertical
STR = Solder Turret, Right Angle
WWV = Solderless Wire Wrap, Vertical

Note: Before ordering, see Cross Reference in Section 15 for equivalent Tyco Electronics Part Number.

Ⓒ **No. of Circuits** (Not Positions)
02 through **32**

Ⓓ **Modifier**
Use table below.
Note: If modifier is -000 it may be omitted. (3PCV-06)

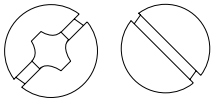
Phil-slot Head Slotted Head

Terminal Style	Modifier Slotted Head	Modifier Phil-slot Head	Screw Style	Mounting Construction
PCV	**000**	**006**	Wire Clamp	No Mounting
	004	**008**	Wire Clamp	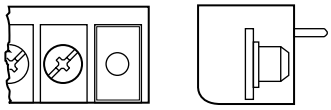
PCR	**000**	**006**	Wire Clamp	No Mounting
	004	**008**	Wire Clamp	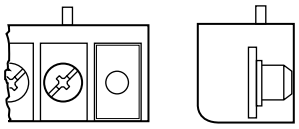
STV WWV	**000**	**006**	Wire Clamp	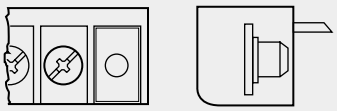
	004	**008**	Wire Clamp	No Mounting
STR	**000**	**006**	Wire Clamp	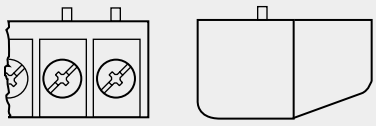
	004	**008**	Wire Clamp	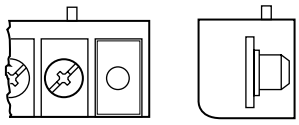

LR30811 E54800

For complete product information, order Catalog 1308389

Products for Industrial & Commercial Applications

Dimensions are shown for reference purposes only.

Dimensions are in inches and millimeters unless otherwise specified. Values in brackets are metric equivalents.

Specifications subject to change.

Technical Support Center
1-800-522-6752
www.tycoelectronics.com

0.250” Pitch, Series #3

Printed Circuit Pin

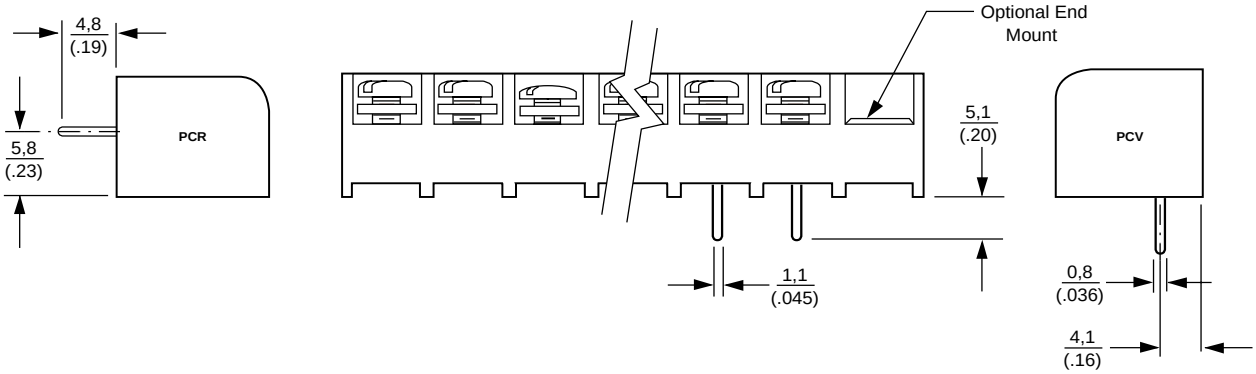

Solder Turret

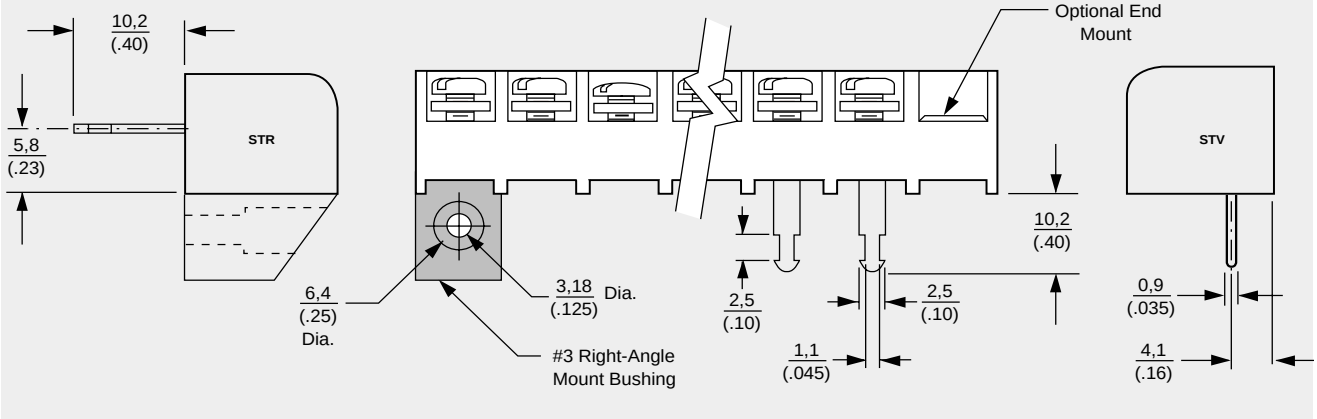

Wire Wrap

#3WWR not available

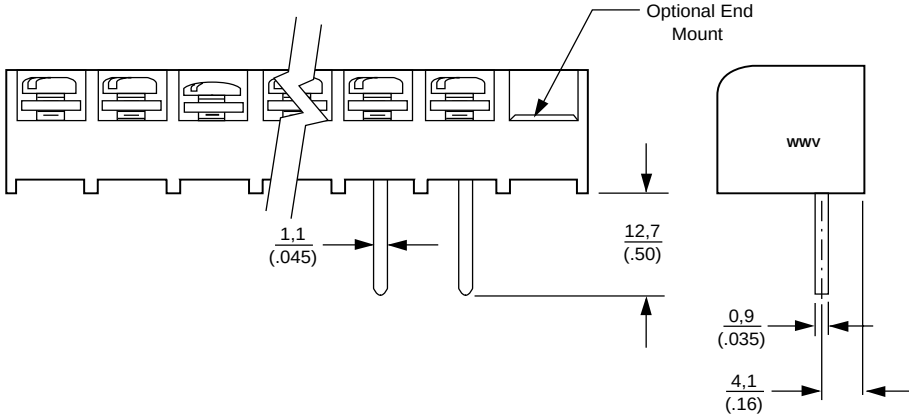

LR30811 E54800

For complete product information, order Catalog 1308389

Products for Industrial & Commercial Applications

Dimensions are shown for reference purposes only.

Dimensions are in inches and millimeters unless otherwise specified. Values in brackets are metric equivalents.

Specifications subject to change.

Technical Support Center
1-800-522-6752
www.tycoelectronics.com

0.250" Pitch, Series #3

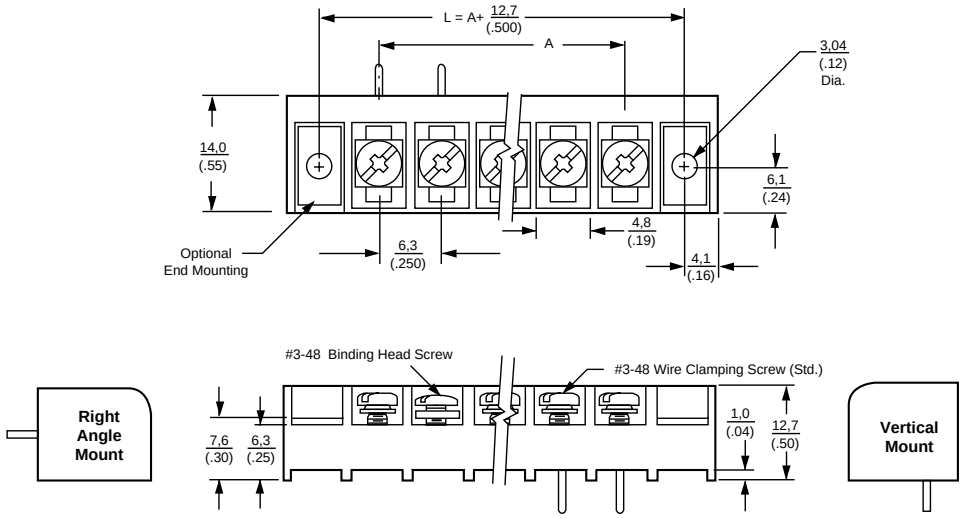

TERMINALS	A
2	(0.25) 6,3
3	(0.50) 12,7
4	(0.75) 19,0
5	(1.00) 25,4
6	(1.25) 31,7
7	(1.50) 38,1
8	(1.75) 44,4
9	(2.00) 50,8
10	(2.25) 57,1
11	(2.50) 63,5
12	(2.75) 69,8
13	(3.00) 76,2
14	(3.25) 82,5
15	(3.50) 88,9
16	(3.75) 95,2
17	(4.00) 101,6

TERMINALS	A
18	(4.25) 107,9
19	(4.50) 114,3
20	(4.75) 120,6
21	(5.00) 127,0
22	(5.25) 133,3
23	(5.50) 139,7
24	(5.75) 146,0
25	(6.00) 152,4
26	(6.25) 158,8
27	(6.50) 165,1
28	(6.75) 171,5
29	(7.00) 177,8
30	(7.25) 184,2
31	(7.50) 190,5
32	(7.75) 196,9

For complete product information, order Catalog 1308389

LR30811 E54800

Products for Industrial & Commercial Applications

Dimensions are shown for reference purposes only.

Dimensions are in inches and millimeters unless otherwise specified. Values in brackets are metric equivalents.

Specifications subject to change.

Technical Support Center
1-800-522-6752
www.tycoelectronics.com

0.325" Pitch, Series #4

Physical Properties

Housing Material: Polyamide
Flammability: UL94V-0
Color: Black

Terminal

Terminals: Bright acid tin over copper alloy
Screws: #4-40 steel, zinc plating with clear chromate coating. Wire clamping screw standard. Binding head screw with undercut optional.

Mechanical

Pitch (Terminal Spacing): 0.325"
Recommended PCB Hole Dia.: 1.8mm (.073")
Recommended Tightening Torque: 7 in.-lbs. max.

Electrical Properties

Maximum Current: 20A
Operating Voltage: 150V/300V (limited rating)
Wire Range: 14-22 AWG

Environmental Properties

Operating Temperature Range: 105°C max.

Note: Before ordering, see Cross Reference in Section 15 for equivalent Tyco Electronics Part Number.

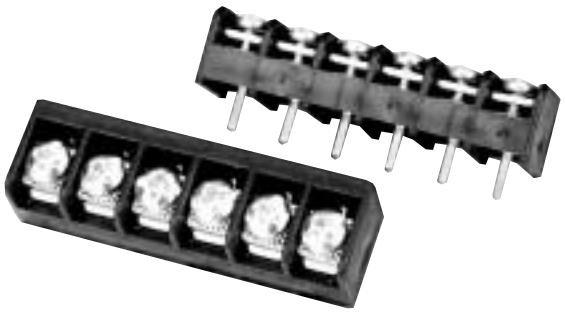

4PCV-06

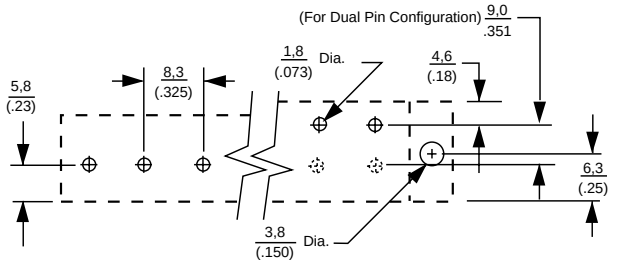

Right Angle — Vertical

Printed Circuit Board Layout

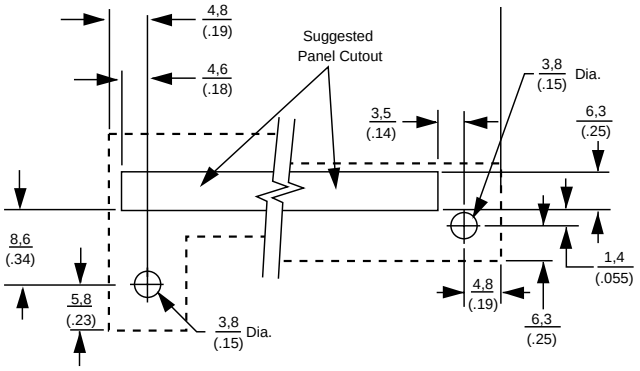

Right Angle — Center

Panel Layout

LR30811 E54800

For complete product information, order Catalog 1308389

Products for Industrial & Commercial Applications

Dimensions are shown for reference purposes only.

Dimensions are in inches and millimeters unless otherwise specified. Values in brackets are metric equivalents.

Specifications subject to change.

Technical Support Center
1-800-522-6752
www.tycoelectronics.com

0.325" Pitch, Series #4

ORDERING INFORMATION

4 PCV-04-004

Ⓐ Ⓑ Ⓒ Ⓓ

Ⓐ **Screw Size Spacing**
4 = #4-40 on .325" Centers

Ⓑ **Terminal Style**
DBL = Double Printed Circuit Pin
PCR = Printed Circuit, Right Angle
PCV = Printed Circuit Pin, Vertical
WWV = Solderless Wire Wrap, Vertical

Note: Before ordering, see Cross Reference in Section 15 for equivalent Tyco Electronics Part Number.

Ⓒ **No. of Circuits** (Not Positions)
02 through **32**

Ⓓ **Modifiers**
Use table below.
Note: If modifier is -000 it may be omitted. (4PCV-06)

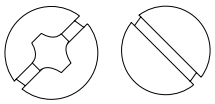
Phil-slot Head Slotted Head

Terminal Style	Modifier Slotted Head	Modifier Phil-slot Head	Screw Style	Mounting Construction
DBL	**000**	**006**	Wire Clamp	No Mounting
	001	**007**	Binding Head	
PCV	**000**	**006**	Wire Clamp	No Mounting
	001	**007**	Binding Head	
	004	**008**	Wire Clamp	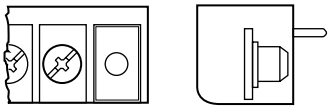
	005	**009**	Binding Head	
PCR	**000**	**006**	Wire Clamp	No Mounting
	001	**007**	Binding Head	
	004	**008**	Wire Clamp	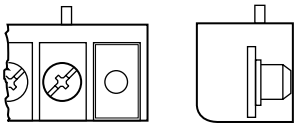
	005	**009**	Binding Head	
WWV	**000**	**006**	Wire Clamp	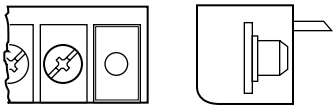
	001	**007**	Binding Head	
	004	**008**	Wire Clamp	No Mounting
	005	**009**	Binding Head	

LR30811 E54800

For complete product information, order Catalog 1308389

Products for Industrial & Commercial Applications

Dimensions are shown for reference purposes only.

Dimensions are in inches and millimeters unless otherwise specified. Values in brackets are metric equivalents.

Specifications subject to change.

Technical Support Center
1-800-522-6752
www.tycoelectronics.com

0.325” Pitch, Series #4

Printed Circuit Pin

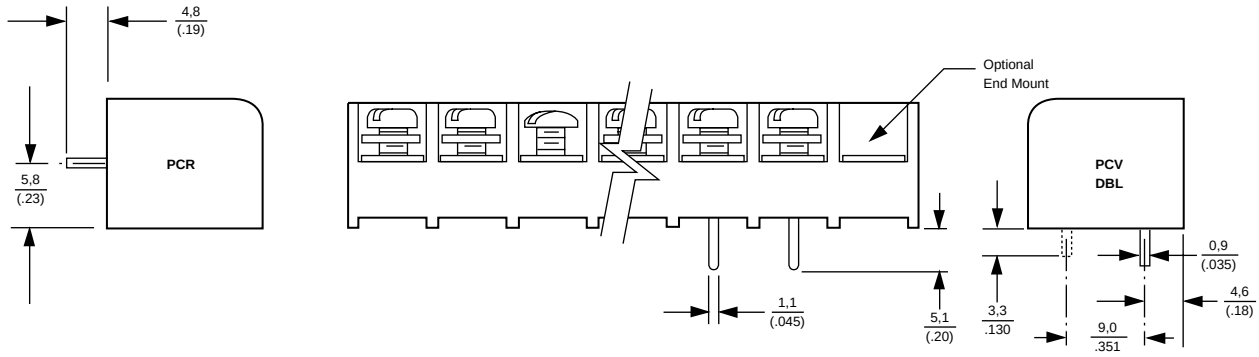

Wire Wrap

#4 WWR Not available

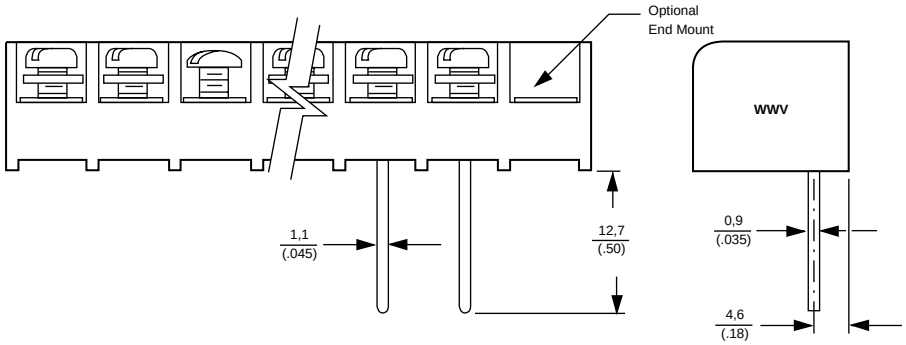

LR30811 E54800

For complete product information, order Catalog 1308389

Products for Industrial & Commercial Applications

Dimensions are shown for reference purposes only.

Dimensions are in inches and millimeters unless otherwise specified. Values in brackets are metric equivalents.

Specifications subject to change.

Technical Support Center
1-800-522-6752
www.tycoelectronics.com

0.375" Pitch, Series BC6

PHYSICAL PROPERTIES

HOUSING MATERIAL: Polypropylene
FLAMMABILITY: UL94V-0
COLOR: Black

TERMINAL

TERMINALS: Bright acid tin over copper alloy
SCREWS: #6-32 steel, zinc plating with clear chromate coating. Wire clamping screw standard.

MECHANICAL

PITCH (TERMINAL SPACING): .375"
RECOMMENDED PCB HOLE DIA.: 1.8mm (.073")

ELECTRICAL PROPERTIES

MAXIMUM CURRENT: 20A
OPERATING VOLTAGE: 300V
WIRE RANGE: 12-22 AWG

ENVIRONMENTAL PROPERTIES

OPERATING TEMPERATURE RANGE: 105°C max.

Note: Before ordering, see Cross Reference in Section 15 for equivalent Tyco Electronics Part Number.



BC6 SERIES

ORDERING INFORMATION

BC6 - P 1 08 - 08
(A) (B) (C) (D)

(A) Terminal Style
P=Printed Circuit (available with 1,2,5 block style only)
T=Solder Turret
Q=Quick Connect
W=Solderless Wrap

(B) Block Style
1=Flat, all positions filled (standard)
2=Flat, end mounting ears with holes (required for cover option)
3=Insulating turret, end mounting ears with holes (required for cover option)
4=Insulating turret, all positions filled
5=Flat, end positions open with mounting bushings
6=Insulating turret, end positions open with mounting bushings

(C) Screw Hardware
04=Steel wire clamp slotted head screw
07=Steel combo binding head screw
08=Steel wire clamp combo head screw

(D) No. of Circuits (Not Positions)
02 to **16** circuits

* Up to 18 circuits available without mounting ears option

Retaining Clips

Spring metal retaining clips fit around insulating barrel to provide permanent mounting of blocks to panels without the need for mounting holes. Use two per block. Catalog # **JC/BC-Retaining**.

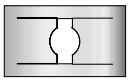

Bottom view

For complete product information, order Catalog 1308389

LR30811 E54800

Products for Industrial & Commercial Applications

Dimensions are shown for reference purposes only.

Dimensions are in inches and millimeters unless otherwise specified. Values in brackets are metric equivalents.

Specifications subject to change.

Technical Support Center
1-800-522-6752
www.tycoelectronics.com

0.375" Pitch, Series BC6

TERMINALS	A
2	(.375) 9,5
3	(.750) 19,1
4	(1.125) 28,6
5	(1.500) 38,1
6	(1.875) 47,6
7	(2.250) 57,1
8	(2.625) 66,7
9	(3.000) 76,2

TERMINALS	A
10	(3.375) 85,7
11	(3.750) 95,2
12	(4.125) 104,8
13	(4.500) 114,3
14	(4.875) 123,8
15	(5.250) 133,3
16	(5.625) 142,9

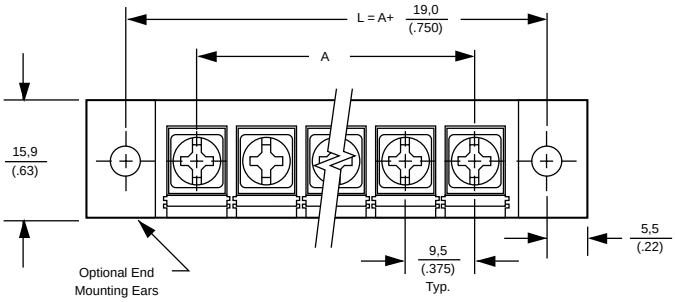

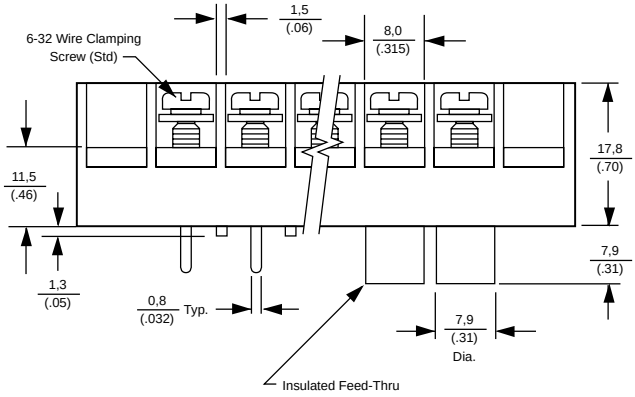

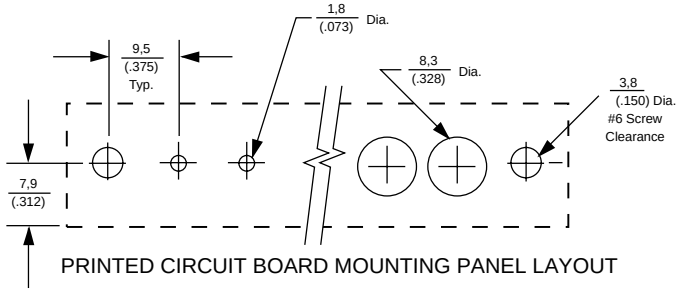

PRINTED CIRCUIT BOARD MOUNTING PANEL LAYOUT

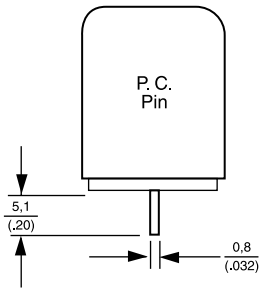

Available Block Styles: 1/2

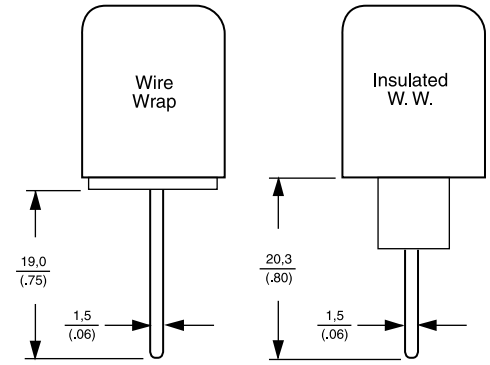

Available Block Styles: 2/3/4

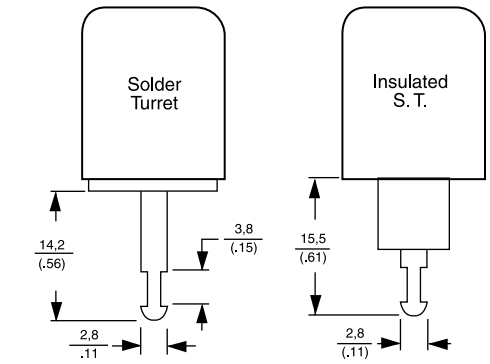

Available Block Styles: 2/3/4

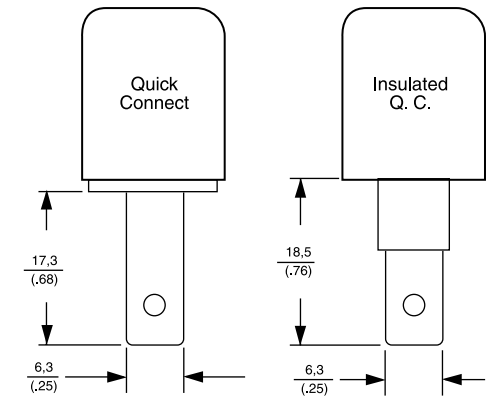

Available Block Styles: 2/3/4

LR30811 E54800

For complete product information, order Catalog 1308389

Products for Industrial & Commercial Applications

Dimensions are shown for reference purposes only.

Dimensions are in inches and millimeters unless otherwise specified. Values in brackets are metric equivalents.

Specifications subject to change.

Technical Support Center
1-800-522-6752
www.tycoelectronics.com

0.375" Pitch, Series MB6, Double Level

Physical Properties

Housing Material: Thermoplastic polyamide
Flammability: UL94V-0
Color: Black

Terminal

Terminals: Bright acid tin over copper alloy
Screws: #6-32 steel, zinc plating with clear chromate coating. Wire clamping screw standard.

Mechanical

Pitch (Terminal Spacing): .375"
Recommended PCB Hole Dia.: 1.8mm (.073")

Electrical Properties

Maximum Current: 25A
Operating Voltage: 300V
Wire Range: 12-22 AWG

Environmental Properties

Operating Temperature Range: 105°C max.

Note: Before ordering, see Cross Reference in Section 15 for equivalent Tyco Electronics Part Number.



MB6-P108-##

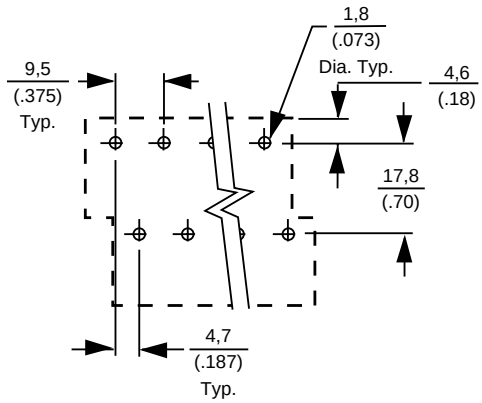

Printed Circuit Board Layout

Ordering Information

MB6 - P1 08 - 04
Ⓐ Ⓑ Ⓒ Ⓓ

Ⓐ **Series**
MB6=Double Level, 0.375" Centers

Ⓑ **Terminal Style**
P1=Printed Circuit Pin, Vertical

Ⓒ **07**=Steel binding combo head screws
08=Steel wire clamp combo head screws

Ⓓ **04** through **40** available in multiples of 2

LR30811 E54800

For complete product information, order Catalog 1308389

Products for Industrial & Commercial Applications

Dimensions are shown for reference purposes only.

Dimensions are in inches and millimeters unless otherwise specified. Values in brackets are metric equivalents.

Specifications subject to change.

Technical Support Center
1-800-522-6752
www.tycoelectronics.com

0.375" Pitch, Series MB6, Double Level

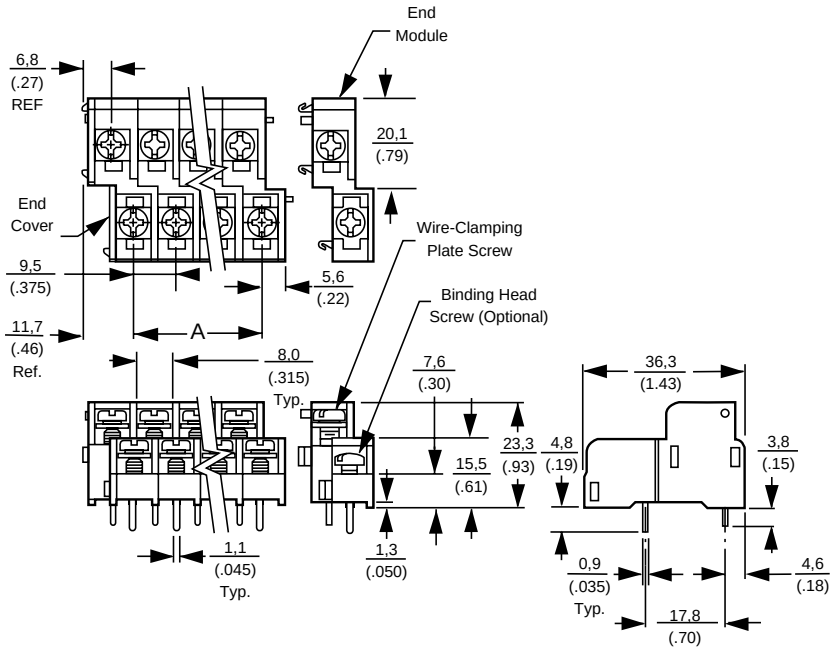

TERMINALS	A	TERMINALS	A
4	(.375) 9,5	24	(4.125) 104,8
6	(.750) 19,1	26	(4.500) 114,3
8	(1.125) 28,6	28	(4.875) 123,8
10	(1.500) 38,1	30	(5.250) 133,3
12	(1.875) 47,6	32	(5.625) 142,9
14	(2.250) 57,1	34	(6.000) 152,4
16	(2.625) 66,7	36	(6.375) 161,9
18	(3.000) 76,2	38	(6.750) 171,4
20	(3.375) 85,7	*40	(7.125) 181,0
22	(3.750) 95,2		

* Longer lengths available.
Please consult Technical Support Center.

LR49571 E60980

For complete product information, order Catalog 1308389

Products for Industrial & Commercial Applications

Dimensions are shown for reference purposes only.

Dimensions are in inches and millimeters unless otherwise specified. Values in brackets are metric equivalents.

Specifications subject to change.

Technical Support Center
1-800-522-6752
www.tycoelectronics.com

0.4375" Pitch, Series #8

Physical Properties

Housing Material: Polypropylene
Flammability: UL94V-0
Color: Black

Terminal

Terminals: Bright acid tin over copper alloy
Screws: #8-32 steel, zinc plating with clear chromate coating. Wire clamping screws standard. Binding head screw with undercut optional.

Mechanical

Pitch (Terminal Spacing): .375"
Recommended PCB Hole Dia.: 1.8mm (.073")

Electrical Properties

Maximum Current: 30A
Operating Voltage: 300V
Wire Range: 10-18 AWG (UL)
10-22 AWG (CSA)

Environmental Properties

Operating Temperature Range: 105°C max.

Note: Before ordering, see Cross Reference in Section 15 for equivalent Tyco Electronics Part Number.



#8 SERIES TRI-BARRIERS

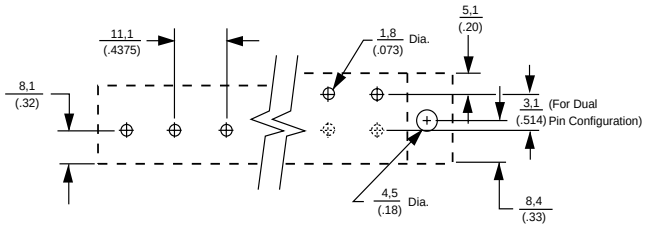

RIGHT ANGLE VERTICAL
PRINTED CIRCUIT BOARD LAYOUT

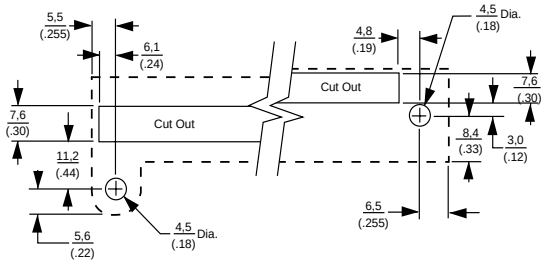

RIGHT ANGLE VERTICAL
MOUNTING PANEL LAYOUT

TERMINALS	A
2	(0.4375) 11,1
3	(0.87) 22,2
4	(1.31) 33,3
5	(1.75) 44,5
6	(2.19) 55,6
7	(2.62) 66,7
8	(3.06) 77,8
9	(3.50) 88,9
10	(3.93) 100,0
11	(4.37) 111,1
12	(4.81) 122,2
13	(5.25) 133,3
14	(5.69) 144,5

TERMINALS	A
15	(6.12) 155,6
16	(6.56) 166,7
17	(7.00) 177,8
18	(7.44) 188,9
19	(7.87) 200,0
20	(8.31) 211,1
21	(8.75) 222,2
22	(9.19) 233,4
23	(9.62) 244,5
24	(10.06) 255,6
25	(10.50) 266,7
26	(10.94) 277,8

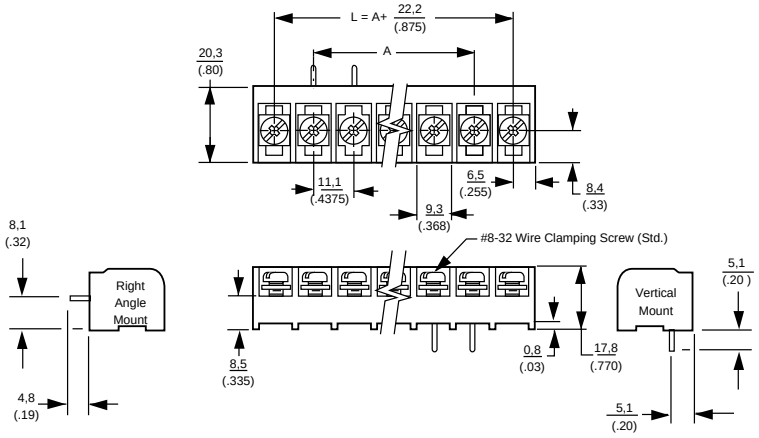

LR30811 E54800

For complete product information, order Catalog 1308389

Products for Industrial & Commercial Applications

Dimensions are shown for reference purposes only.

Dimensions are in inches and millimeters unless otherwise specified. Values in brackets are metric equivalents.

Specifications subject to change.

Technical Support Center
1-800-522-6752
www.tycoelectronics.com

0.4375" Pitch, Series #8

ORDERING INFORMATION

8 PCV-04-004

Ⓐ Ⓑ Ⓒ Ⓓ

Ⓐ **Screw Size Spacing**
8 = #8-32 on .4375" Centers

Ⓑ **Terminal Style**
DBL = Double Printed Circuit Pin
PCR = Printed Circuit, Right Angle
PCV = Printed Circuit Pin, Vertical
QCR = Quick Connect Tab, Right Angle
QCV = Quick Connect Tab, Vertical
STR = Solder Turret, Right Angle
STV = Solder Turret, Vertical
TBV = Non Feed Thru
WWR = Solderless Wire Wrap, Right Angle
WWV = Solderless Wire Wrap, Vertical

Ⓒ **No. of Circuits** (Not positions)
02 through **26**

Ⓓ **Modifiers**
Use table below.
-001=-000 except binding head screw
-002=-000 except brass screw
-003=-000 except brass binding head screw
Note: If modifier is -000 it may be omitted. (8PCV-06)

Note: Before ordering, see Cross Reference in Section 15 for equivalent Tyco Electronics Part Number.

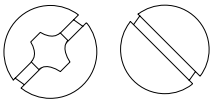
Phil-slot Head Slotted Head

Terminal Style	Modifier Slotted Head	Modifier Phil-slot Head	Screw Style	Mounting Construction
DBL	**000**	**006**	Wire Clamp	No Mounting
	001	**007**	Binding Head	
PCV	**000**	**006**	Wire Clamp	No Mounting
	001	**007**	Binding Head	
	004	**008**	Wire Clamp	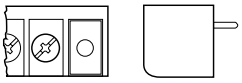
	005	**009**	Binding Head	
PCR	**000**	**006**	Wire Clamp	No Mounting
	001	**007**	Binding Head	
	004	**008**	Wire Clamp	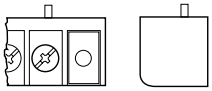
	005	**009**	Binding Head	
QCV STV WWV	**000**	**006**	Wire Clamp	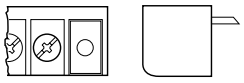
	004	**008**	Wire Clamp	No Mounting
QCR STR WWR	**000**	**006**	Wire Clamp	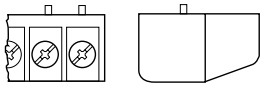
	004	**008**	Wire Clamp	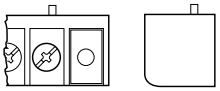
TBV	**000**	**006**	Wire Clamp	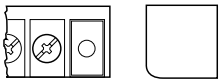

LR30811 E54800

For complete product information, order Catalog 1308389

Products for Industrial & Commercial Applications

Dimensions are shown for reference purposes only.

Dimensions are in inches and millimeters unless otherwise specified. Values in brackets are metric equivalents.

Specifications subject to change.

Technical Support Center
1-800-522-6752
www.tycoelectronics.com

0.4375" Pitch, Series #8

Printed Circuit Pin

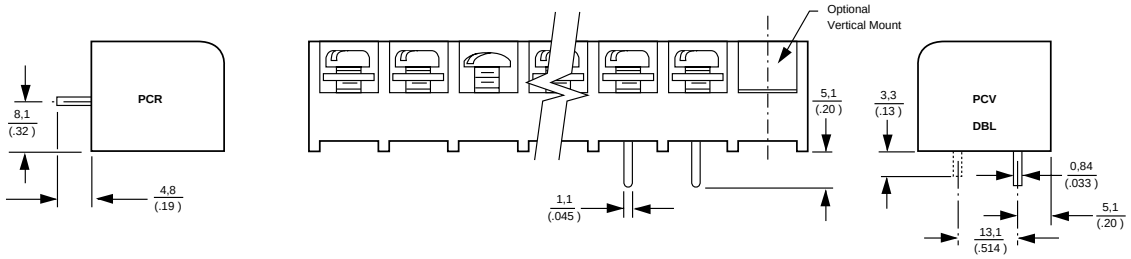

Solder Turret

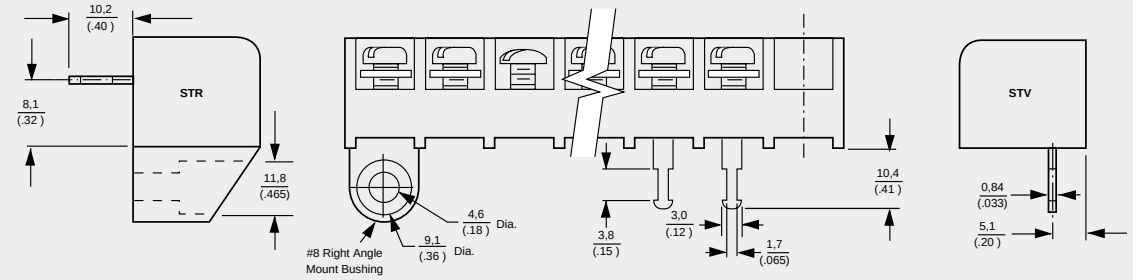

Wire Wrap

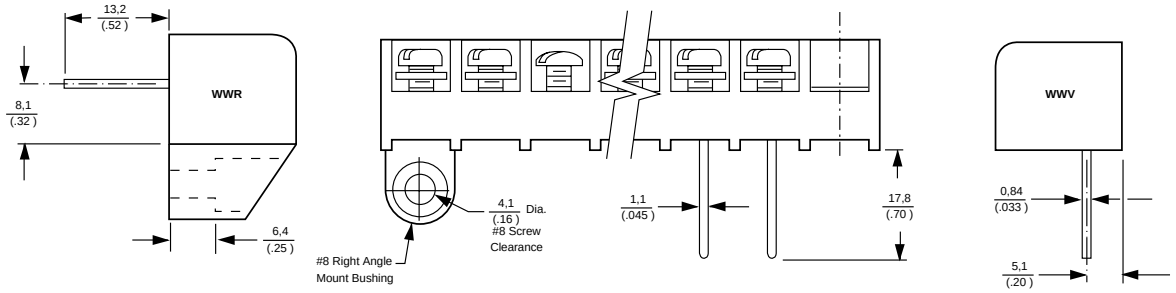

Quick Connect

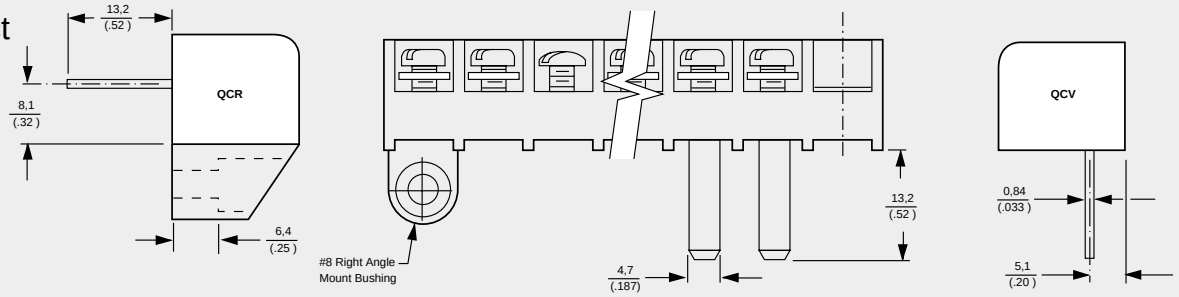

Non-Feed Thru

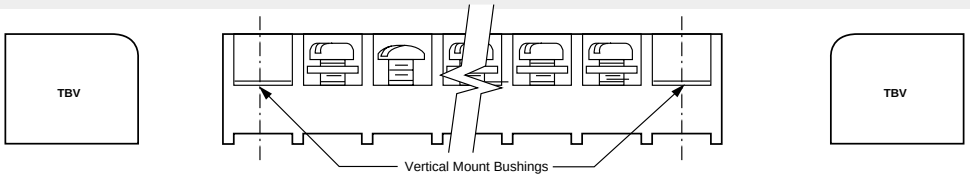

For complete product information, order Catalog 1308389

Products for Industrial & Commercial Applications

Dimensions are shown for reference purposes only.

Dimensions are in inches and millimeters unless otherwise specified. Values in brackets are metric equivalents.

Specifications subject to change.

Technical Support Center
1-800-522-6752
www.tycoelectronics.com

0.325" Pitch, Series 4DB

PHYSICAL PROPERTIES

HOUSING MATERIAL: Thermoplastic Polyamide
FLAMMABILITY: UL94V-0
COLOR: Black

TERMINAL

TERMINALS: Bright acid-tin over copper alloy
SCREWS: #6-32 steel, zinc plating with clear chromate coating, undercut binding head screw standard.

MECHANICAL

PITCH (TERMINAL SPACING): 0.325"
RECOMMENDED PCB HOLE DIA.: 1.7mm (0.07")

ELECTRICAL PROPERTIES

MAXIMUM CURRENT: 20A
OPERATING VOLTAGE: 150V (UL), 300V (CSA)
WIRE RANGE: 14-22 AWG

ENVIRONMENTAL PROPERTIES

OPERATING TEMPERATURE RANGE: 105°C max.

Note: Before ordering, see Cross Reference in Section 15 for equivalent Tyco Electronics Part Number.

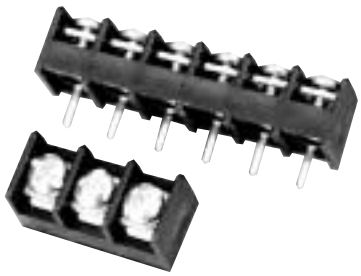

4DB-P108-##

ORDERING INFORMATION

4DB - P 1 08 - 06
Ⓐ Ⓑ Ⓒ Ⓓ Ⓔ

Ⓐ **Series**
4DB = Dual-Barrier, 0.325" Centers

Ⓑ **Terminal Style**
P = Printed Circuit Pin
W = Wire Wrap
R = Right Angle
S = Non-Feed Thru

Ⓒ **Block Style**
1 = Flat, all positions filled
2 = Flat, end mounting holes

Ⓓ **Screw Type**
04 = Steel wire clamp slotted head screws
07 = Steel binding combo head screws
08 = Steel wire clamp combo head screws

Ⓔ **No. of Circuits** (Not Positions)
02 through **30**

LR30811 E54800

For complete product information, order Catalog 1308389

Products for Industrial & Commercial Applications

Dimensions are shown for reference purposes only.

Dimensions are in inches and millimeters unless otherwise specified. Values in brackets are metric equivalents.

Specifications subject to change.

Technical Support Center
1-800-522-6752
www.tycoelectronics.com

0.325" Pitch, Series 4DB

Dimensions

TERMINALS	A	TERMINALS	A
2 (0.325)	8,2	17 (5.200)	132,1
3 (0.650)	16,5	18 (5.525)	140,3
4 (0.975)	24,8	19 (5.850)	148,6
5 (1.300)	33,0	20 (6.175)	156,8
6 (1.625)	41,3	21 (6.500)	165,1
7 (1.950)	49,5	22 (6.825)	173,3
8 (2.275)	57,8	23 (7.150)	181,6
9 (2.600)	66,0	24 (7.475)	190,0
10 (2.925)	74,3	25 (7.800)	198,1
11 (3.250)	82,5	26 (8.125)	206,4
12 (3.575)	90,8	27 (8.450)	214,6
13 (3.900)	99,1	28 (8.775)	222,8
14 (4.225)	107,3	29 (9.100)	231,1
15 (4.550)	115,6	30 (9.425)	239,4
16 (4.875)	123,8		

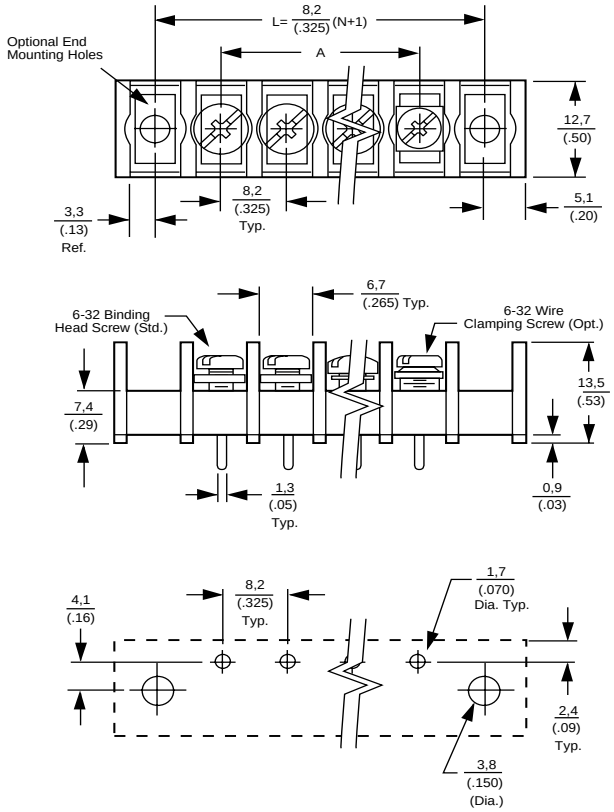

PRINTED CIRCUIT BOARD LAYOUT

Bend Options:

A variety of bend options are available. Please consult Technical Support Center for details.

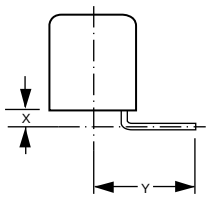

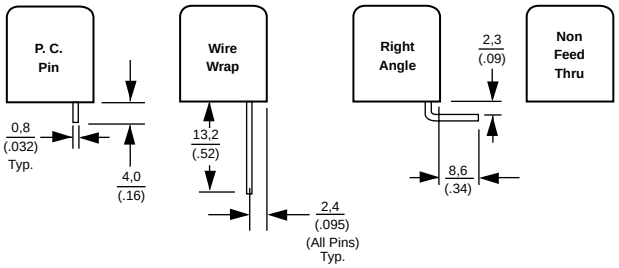

For complete product information, order Catalog 1308389

LR30811 E54800

Products for Industrial & Commercial Applications

Dimensions are shown for reference purposes only.

Dimensions are in inches and millimeters unless otherwise specified. Values in brackets are metric equivalents.

Specifications subject to change.

Technical Support Center
1-800-522-6752
www.tycoelectronics.com

0.375" Pitch, NC6 Series, Low Profile

Physical Properties

Housing Material: Thermoplastic polyamide
Flammability: UL94V-0
Color: Black

Terminal

Terminals: Bright acid tin over copper alloy
Screws: #6-32 steel, zinc plating with clear chromate coating. Wire clamping screw standard.

Mechanical

Pitch (Terminal Spacing): .375"
Screw Size: #6-32 steel
Recommended PCB Hole Dia.: .073" dia.

Electrical Properties

Maximum Current: 20A
Operating Voltage: 300V
Wire Range: 12-22 AWG

Environmental Properties

Operating Temperature Range: 105°C max.

Note: Before ordering, see Cross Reference in Section 15 for equivalent Tyco Electronics Part Number.

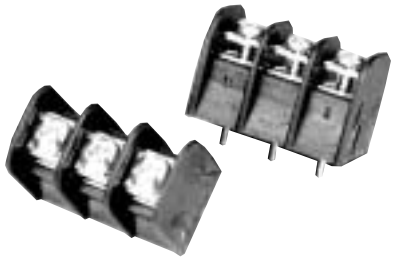

NC6-P108-03

Ordering Information

NC6 - P 1 08- 04
Ⓐ Ⓑ Ⓒ Ⓓ Ⓔ

Ⓐ **Series**
NC6 = Dual-Barrier, 0.375" Centers, Low Profile

Ⓑ **Terminal Style**
P = Printed Circuit Pin

Ⓒ **Block Style**
1 = Flat, all positions filled
2 = End mounting holes provided

Ⓓ **Screw Hardware**
02 = Brass clamp-plate slotted head screws
04 = Steel clamp-plate slotted head screws
05 = Steel slotted binding head screws
07 = Steel binding combo head screws
08 = Steel clamp-plate combo head screws

Ⓔ **No. of Circuits** (Not positions)
02 through **30**

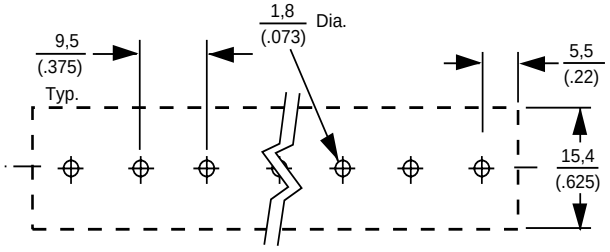

RECOMMENDED HOLE LAYOUT

LR30811 E54800

For complete product information, order Catalog 1308389

Products for Industrial & Commercial Applications

Dimensions are shown for reference purposes only.

Dimensions are in inches and millimeters unless otherwise specified. Values in brackets are metric equivalents.

Specifications subject to change.

Technical Support Center
1-800-522-6752
www.tycoelectronics.com

0.375" Pitch, NC6 Series, Low Profile

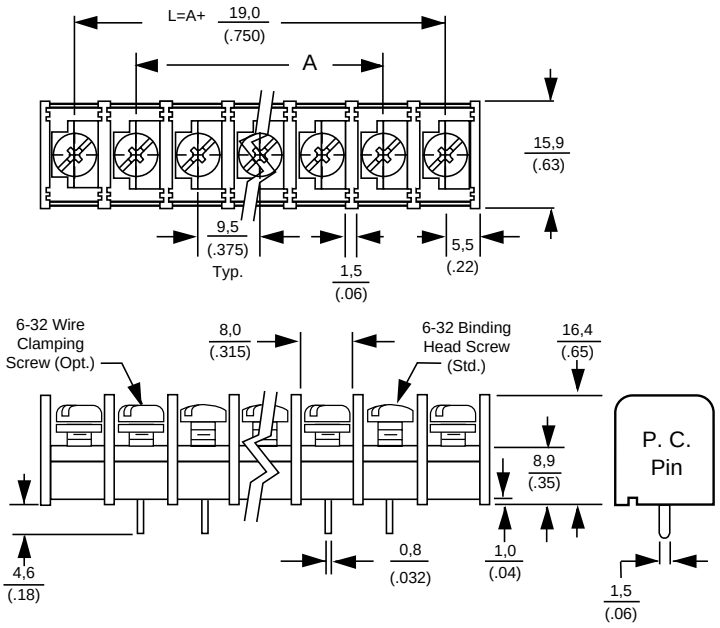

Products for Industrial & Commercial Applications

Dimensions are shown for reference purposes only.

Dimensions are in inches and millimeters unless otherwise specified. Values in brackets are metric equivalents.

Specifications subject to change.

Technical Support Center
1-800-522-6752
www.tycoelectronics.com

0.4375" Pitch, Series SSB7

PHYSICAL PROPERTIES

HOUSING MATERIAL: Polypropylene
FLAMMABILITY: UL94V-2
COLOR: Black

TERMINAL

TERMINALS: Brass, bright acid tin over copper plating
SCREW: Steel with zinc + chromate plating
CLAMP: Steel with zinc + chromate plating

MECHANICAL

PITCH (TERMINAL SPACING): .437 in.
SCREW SIZE: 6-32
RECOMMENDED PCB HOLE DIA.: .077"
WIRE STRIP LENGTH: .38"
RECOMMENDED TIGHTENING TORQUE: 8 in-lbs.
RECOMMENDED SCREWDRIVERS: Stanley 1006-4, Sears Craftsman 41581, Any #2 Phillips-Head
WIRE LUG WIDTH (MAX.): 8,1mm (.320 in.)

ELECTRICAL PROPERTIES

MAXIMUM CURRENT: 20A
OPERATING VOLTAGE: 600V
WIRE RANGE: (Clamp Screw): #12 max. AWG
(Binding Head Screw): #14 max. AWG
DIELECTRIC WITHSTAND: 5000V

ENVIRONMENTAL PROPERTIES

OPERATING TEMPERATURE RANGE: -60ºC to +105ºC (-76ºF to +221ºF)

Note: Before ordering, see Cross Reference in Section 15 for equivalent Tyco Electronics Part Number.

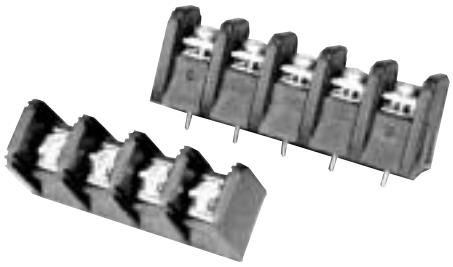

SSB7FP##0202

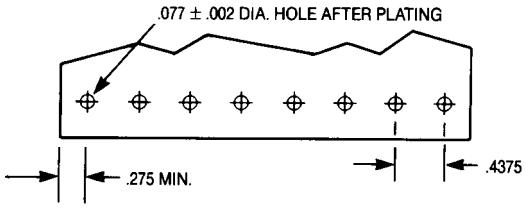

SSB7

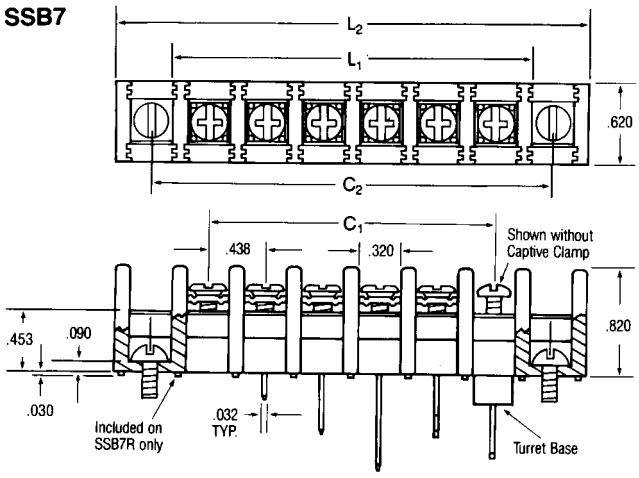

Dimensions

CIRCUITS (NOT POSITIONS)	C1 IN.	L1* IN.	C2 IN.	L2* IN.
01			.88	1.44
02	.44	1.00	1.31	1.88
03	.88	1.44	1.75	2.31
04	1.31	1.88	2.19	2.75
05	1.75	2.31	2.63	3.19
06	2.19	2.75	3.06	3.63
07	2.63	3.19	3.50	4.06
08	3.06	3.63	3.94	4.50
09	3.50	4.06	4.38	4.94
10	3.94	4.50	4.81	5.38
11	4.38	4.94	5.25	5.81
12	4.81	5.38	5.69	6.25
13	5.25	5.81	6.13	6.69
14	5.69	6.25	6.56	7.13
15	6.13	6.69	7.00	7.56
16	6.56	7.13	7.44	8.00
17	7.00	7.56	7.88	8.44
18	7.44	8.00	8.31	8.88
19	7.88	8.44	8.75	9.31
20	8.31	8.88	9.19	9.75
21	8.75	9.31	9.63	10.19
22	9.19	9.75	10.06	10.63
23	9.63	10.19	10.50	11.06
24	10.06	10.63	10.94	11.50
25	10.50	11.06	11.38	11.94
26	10.94	11.50		
27	11.38	11.94		

COMPUTING BARRIER BLOCK LENGTHS

DIRECT MOUNTING: Use C1 and L1 for P & H mounting options

END POSITION MOUNTING: Use L2 and C2 for M, E, F & G mounting options

LR49571 E60980

For complete product information, order Catalog 1308389

Products for Industrial & Commercial Applications

Dimensions are shown for reference purposes only.

Dimensions are in inches and millimeters unless otherwise specified. Values in brackets are metric equivalents.

Specifications subject to change.

Technical Support Center
1-800-522-6752
www.tycoelectronics.com

0.4375" Pitch, Series SSB7

ORDERING INFORMATION

SSB 7 F P 06 02 02 11
Ⓐ Ⓑ Ⓒ Ⓓ Ⓔ Ⓕ Ⓖ Ⓗ

Ⓐ Single Screw Tri-Barrier Strip
SSB

Ⓑ Contact Spacing (Center-to-Center)
7 =.4375 (7/16)

Ⓒ Base Options
C=Closed Base
F=Flat Base
R=Raised Base, Narrow Profile (with 02 & 04 terminal style only)
T=Turret Base (Available only with 01, 04, 05, 07, 09, 12, 13, 15 style bottom terminals)
U=Turret Base, Narrow Profile (Available only with 01, 04, 05, 07, 09, 12, 13, 15 style bottom terminals on SSB6)

Ⓓ Mounting Options
(See illustration below)
E=Open end positions, with mounting inserts, with end barriers
F=Open end positions, without mounting inserts, without end barriers
G=Open end positions, with mounting inserts, without end barriers
H=All positions filled with contacts, without end barriers
M=Open end positions, without mounting inserts, with end barriers
P=All positions filled with contacts, with end barriers

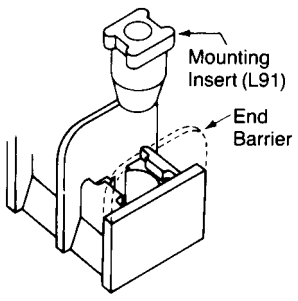

Ⓔ No. of Circuits (Not Positions)
Must conform to mounting options
02 to **32** circuits (P & H mounting)
02 to **27** circuits (M, E, F & G mounting)

Ⓕ Terminal Style
01=Solder Tail
02=Printed Circuit Pin
03=Non-Feed Through (with C base only)
04=Extended Printed Circuit Pin
05=Quick Connects
06=90° bend, .46" x .11" (with F base only)
07=Wire Wrap
08=90° bend, .75" x .11" (with F base only)
09=Extra-Long Terminal
12=90° bend, .21" x .65"
13=90° bend, .36" x .50"
14=90° bend, .41" x .16" (with F base only)
15=90° bend, .51" x .35"
16=90° bend, .32" x .25" (with F base only)

Ⓖ Top Hardware Options
00=No top hardware (Separately packaged binding head screws supplied at no cost)
01=Bright zinc and chromate plated steel binding head screw
02=Bright zinc and chromate plated steel screw and captive clamp - Do not order with other top hardware
03=Stainless steel binding head screw
04=Nickel plated brass binding head screw
09=Nickel plated brass screw and captive clamp - Do not order with other top hardware

Note: Before ordering, see Cross Reference in Section 15 for equivalent Tyco Electronics Part Number.

80=Single-sided solder tab
81=Double-sided solder tab

Quick-Connect Blades
(supplied with 01 screw)

.250 wide x.032 thick	.187 wide x.020 thick
20	40=
21	41=
22	42=
23	43=
24	44=
25	45=
26	46=
27	47=
28	48=
29	49=
30	50=
31	51=
32	52=
33	53=
34	54=
35	55=
36	56=

Ⓗ Circuit Identification Options

11	= 12345...
12	= ...54321
13	= 1 2 3 4 5 . . .
14	= . . . 5 4 3 2 1
15	= ⋯12345
16	= ⋯54321

LR49571 E60980

For complete product information, order Catalog 1308389

Products for Industrial & Commercial Applications

Dimensions are shown for reference purposes only.

Dimensions are in inches and millimeters unless otherwise specified. Values in brackets are metric equivalents.

Specifications subject to change.

Technical Support Center
1-800-522-6752
www.tycoelectronics.com

0.4375" Pitch, Series SSB7, Options

CONTACT SPACING OPTIONS:

.4375 in (7/16") Spacing

Extra thick barriers provide higher voltage rating. Up to 27 ckts. (25 circuits for end mounted blocks)

BASE OPTIONS:

Closed Base

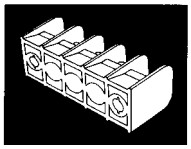

CATALOG LETTER CODE: **C.** For terminal junction-blocks requiring top connections only. Useful in applications requiring single point circuit terminations or circuit completion via top mounted, single- and two-sided quick-connects. Replace double-row barrier strips.

Flat Base

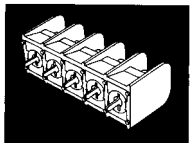

CATALOG LETTER CODE: **F.** Lends itself most readily to applications where direct top-to-bottom feed-through is required with no special requirement for circuit isolation on the bottom side. The most common example of this is printed circuit board mounting.

Raised Base

Catalog code SSB7R. Standoffs between each circuit raise block .030" above mounting surface to allow flux and solvents to drain during soldering operations. Available only with 02 and 04 bottom terminals.

Turret Base

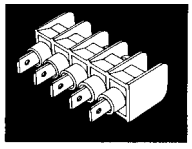

CATALOG LETTER CODE: **T.** Combines top-to-bottom feed-through with bottom-side circuit isolation for panels up to .126" thick. Turret bases are available with the following terminals: solder tail, quick connect, machine wrap, extended circuit board terminal, and right-angle.

MOUNTING OPTIONS:

End Position Mounting

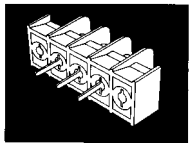

CATALOG LETTER CODES: **E, F, G OR M.** Supplied without contacts in end sections to allow installer to mount blocks with screws in end section holes. Base of block will support mounting screws (Codes F & M). Also available with mounting inserts installed in end mounting holes to raise mounting screw heads to the level of other top hardware (Codes E & G).

Without End Barriers

CATALOG LETTER CODES: **F, G & H.** Facilitates mounting-screw access when end sections are used for mounting.

Direct Mounting

CATALOG LETTER CODES: **P & H.** SSBs may be solder-mounted using the bottom terminals themselves, as in the case of printed circuit board applications.

Direct mounting is also possible with turret base models using press-on retaining clips (Catalog No. L97) on turrets.

TERMINAL STYLE:

Solder Tail

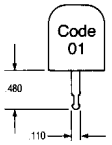

CATALOG NUMBER CODE: **01.** For applications requiring a wrapped solder connection.

Printed Circuit Pin

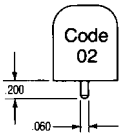

CATALOG NUMBER CODE: **02.** Designed specifically for mounting on .063" thick circuit board. Special, readily solderable plating permits good fillet development in automated soldering processes.

Non-Feed-Through

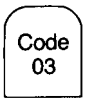

CATALOG NUMBER CODE: **03.** With closed base option only.

Extended Printed Circuit Pin

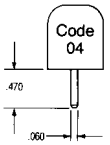

CATALOG NUMBER CODE: **04.** Useful where extra length is needed, as in thicker printed circuit boards or single-wrap connections.

Quick Connect

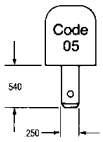

CATALOG NUMBER CODE: **05.** .250 in. wide x .032" thick blades accept .250" female quick connects.

LR49571 E60980

For complete product information, order Catalog 1308389

0.4375" Pitch, Series SSB7, Options

MOUNTING POSITION:

Right-Angle

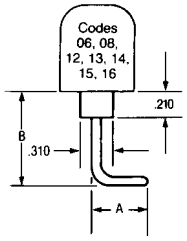

CATALOG NUMBER CODES: **06, 08, 12, 13, 14, 15, 16.** Seven variations of right-angle contacts are available. Designed for circuit board and panel applications, this option saves space when printed circuit boards are stacked closely together. It provides access to top connections in restricted spaces. Mount with (Catalog No. L92).

CATALOG NO. CODE	A IN.	B IN.
06*	0.46	0.11
08*	0.75	0.11
12	0.21	0.65
13	0.36	0.50
14*	0.41	0.16
15	0.51	0.35
16*	0.32	0.25

*Not available with turret base

Wire Wrap

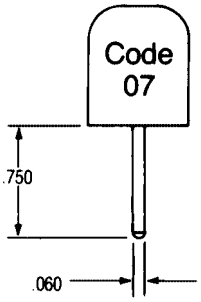

CATALOG NUMBER CODE: **07.** Longer than extended circuit board terminals. Post alignment is compatible with tolerances required for automatic wire wrapping equipment. Post dimensions are compatible with standard wire wrapping bits.

Extra Long Terminal

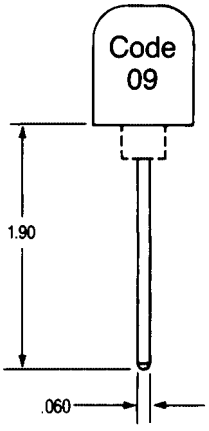

CATALOG NUMBER CODE: **09.**

TOP HARDWARE OPTIONS:

Binding Head Screws

In most applications, binding head screws will provide excellent wire retention because of exclusive wire locking tabs. These binding head screws are available in four styles:



CATALOG NUMBER CODE:
01 *Bright Zinc and Chromate Plated Steel
02 Stainless Steel
03 *Nickel Plated Brass

*Phil-slot design

Captive Clamp



CATALOG NUMBER CODES: **02 & 09.** For applications requiring extra security, captive clamps under the screw heads augment the locking tabs on each contact. Scews have a unique Phil-slot design accepting either Phillips-head or straight screwdriver. Code 02 screw is Bright Zinc and Chromate plated steel. Code 09 screw is Nickel plated Brass.

CATALOG NUMBER CODES: **20 through 56.** A complete selection of .187" and .250" quick-connect blades are available for connecting wire terminated with female quick connects. Single- and double-sided types in flat, 45° and 90° angle bends can be supplied. Material is brass with tin plating. All blades supplied with 01 screws. Various quick-connects can be combined.

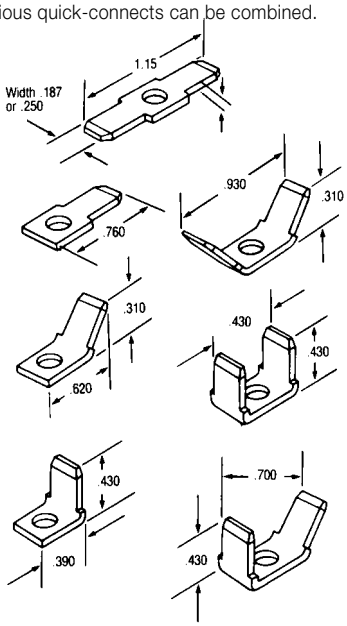

Solder Tabs

CATALOG NUMBER CODES: **80 & 81.** Single- and double-sided, slotted solder tabs are available for making wrapped solder connections on the top side of SSBs.

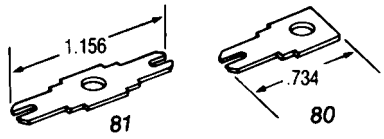

CIRCUIT IDENTIFICATION OPTIONS:

CATALOG NUMBER CODES: **11 through 16.** SSB blocks may be ordered with circuit identification numbers in white on the molding in six different variations. Custom markings are available on special order.

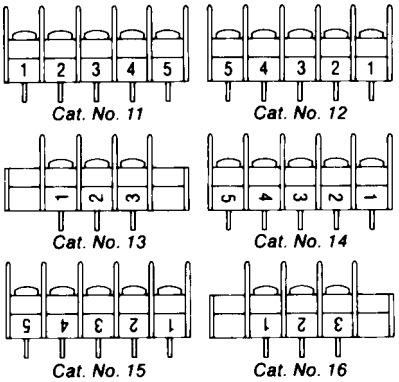

MOLDING MATERIAL OPTIONS:

The standard SSB molding material is UL94V-2 polypropylene. Consult Technical Support Center for other materials available on special order.

MOLDING COLOR OPTIONS:

SSB blocks are stocked in black.
Consult Technical Support Center for availability of other colors.

Products for Industrial & Commercial Applications

Dimensions are shown for reference purposes only.

Dimensions are in inches and millimeters unless otherwise specified. Values in brackets are metric equivalents.

Specifications subject to change.

Technical Support Center
1-800-522-6752
www.tycoelectronics.com

0.4375" Pitch, Series SSB7, Accessories

Description	Catalog Number
STEEL BINDING HEAD SCREWS, Phil-slot Bright zinc and chromate plated	*L01*
CAPTIVE CLAMP SCREW L02 is steel, bright zinc and chromate plated L09 is brass, nickel plated	*L02* *L09*
PRESS-ON STAINLESS STEEL RETAINING CLIPS for mounting turret base SSBs	*1437661-7*
MOUNTING INSERTS for mounting SSBs with blank end sections, nylon. Package of 100 (use No. 6 screw)	*L91*
ANGLE BRACKET for mounting SSBs with right-angle terminals, copper alloy, tin plated	*L92*

Ordering Information

QUICK CONNECT BLADES DESCRIPTION		.250 WIDE X .032 THICK	.187 WIDE X .020 THICK
Flat, Single-Sided	—	QC20-BU	QC40-BU
45°, Two-Sided	⩗	QC21	QC41
90°, Two-Sided	⊔	QC22	QC42
Flat, Single-Sided	—	QC23	QC43
45°, Single-Sided	◺	QC24	QC44
90°, Single-Sided	⌊	QC25	QC45
90°-45°, Two-Sided	⌊◺	QC36	QC56

SOLDER TABS:
For making top-side solder connections
Single-Sided — *ST80*
Double-Sided — *ST81*

JUMPERS:
Spade Type (Brass, Tin plated)
Two-Circuit, Over the Barrier. Fits SSB6 & SSB7 — *J74*

Ring Tongue
Two-Circuit, Over the Barrier. Fits SSB6 & SSB7 — *J75*

SB6 Around the Barrier* Spade — *J6140*
40 circuits; snap apart to desired lengths

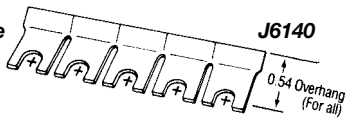

Note: Before ordering, see Cross Reference in Section 15 for equivalent Tyco Electronics Part Number.

Description	Catalog Number
JUMPERS: *(Continued)* ***SSB7 Around the Barrier* Spade*** 40 circuits; snap apart to desired lengths	*J7140*
SSB7 Around the Barrier* Flanged Spade 40 circuits; snap apart to desired lengths	*J7240*
SSB7 Around the Barrier* Ring Tongue 40 circuits; snap apart to desired lengths	*J6340*

***NOTE:** Jumper extends 0.54 horizontally from center of screw.

RELATED PRODUCT DATA
Wire Pins and Ferrules:
For more information on AMP Standard Terminals and Splices or Quick-Connect FASTON Receptacles and Tabs, request Catalog 82042.

SAFETY COVERS (For RSB & SSB Barrier Strips)

Dead front protection designed to help prevent accidental contact with energized circuits. access holes for test probes are provided over each terminal. Nylon clips are included with each cover. Covers meet UL94V-0, with 50ºC temperature index. Blank circuit identification is optional.

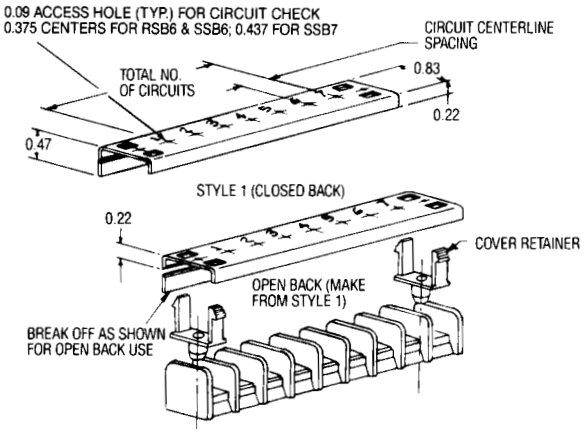

Ordering Information

7 C 1 N 07

- **7** — ***Centerline Dimensions*** *6=6/16 (3/8") 7=7/16*
- **C** — ***Cover Material*** *C=Yellow PVC*
- **1** — ***Style*** *1=Closed Back*
- **N** — ***Circuit Identification*** *N=No Markings F=Forward Sequence (as shown) R=Reverse Sequence*
- **07** — ***Number of Circuits*** *(Use Two Digits) Max. for SSB6=30 Max. SSB7=25 Max. RSB6=34*

For complete product information, order Catalog 1308389

0.325" Pitch, Series USB Socket (For Series RSB3 and SSB3)

Physical Properties

Housing Material: Polyamide, Type 6/6
Flammability: UL94V-2
Color: Black

Terminal

Terminals Contact: Copper alloy, bright tin plating
Pin: Copper alloy, bright tin plating

Mechanical

Pitch (Terminal Spacing): 0.325"
Recommended PCB Hole Dia.: .055"
Pullout Force: 5-7 lbs.

Electrical Properties

Maximum Current: 10A
Operating Voltage: 300V
Dielectric Withstand: 3500V

Environmental Properties

Operating Temperature Range: -60ºC to +105ºC
(-76ºF to +221ºF)

Note: Before ordering, see Cross Reference in Section 15 for equivalent Tyco Electronics Part Number.



USB3B08S & SSB3FP080202

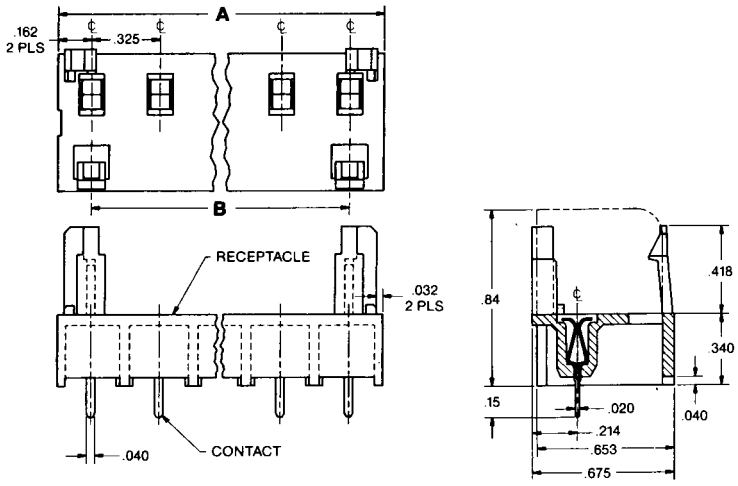

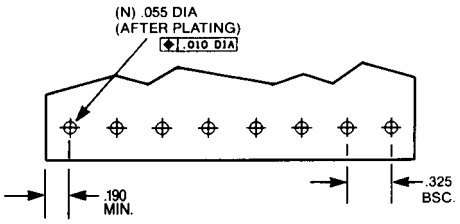

Recommended PCB Hole Pattern

Ordering Information and Mating Table

CATALOG NUMBER	NO. OF CIRCUITS	DIMENSION A	DIMENSION B	MATING STRIP CATALOG NUMBER	MATING STRIP CATALOG NUMBER
USB3B02S	2	.650	.325	SSB3FP0202...	RSB3VP0212...
USB3B03S	3	.975	.650	SSB3FP0302...	RSB3VP0312...
USB3B04S	4	1.300	.975	SSB3FP0402...	RSB3VP0412...
USB3B05S	5	1.625	1.300	SSB3FP0502...	RSB3VP0512...
USB3B06S	6	1.950	1.625	SSB3FP0602...	RSB3VP0612...
USB3B07S	7	2.275	1.950	SSB3FP0702...	RSB3VP0712...
USB3B08S	8	2.600	2.275	SSB3FP0802...	RSB3VP0812...
USB3B09S	9	2.925	2.600	SSB3FP0902...	RSB3VP0912...
USB3B10S	10	3.250	2.925	SSB3FP1002...	RSB3VP1012...
USB3B11S	11	3.575	3.250	SSB3FP1102...	RSB3VP1112...
USB3B12S	12	3.900	3.575	SSB3FP1202...	RSB3VP1212...
USB3B13S	13	4.225	3.900	SSB3FP1302...	RSB3VP1312...
USB3B14S	14	4.550	4.225	SSB3FP1402...	RSB3VP1412...

NOTE: Mating SSB3 Barrier Strips require printed circuit pin terminal style "02."
Mating RSB3 Barrier Strips require printed circuit pin terminal style "12."

LR49571 E60980

For complete product information, order Catalog 1308389

Products for Industrial & Commercial Applications

Dimensions are shown for reference purposes only.

Dimensions are in inches and millimeters unless otherwise specified. Values in brackets are metric equivalents.

Specifications subject to change.

Technical Support Center
1-800-522-6752
www.tycoelectronics.com

0.375" Pitch, Series RSB6B Socket (For Series RSB6 Tri-Barrier)



RSB6B06S

Physical Properties

Housing Material: Polyamide
Flammability: UL94V-2
Color: Black

Terminal

Terminals: Copper alloy, bright tin plating
Pin: Copper alloy, bright tin plating

Mechanical

Pitch (Terminal Spacing): .375 in
Recommended PCB Hole Dia.: .062"

Electrical Properties

Maximum Current: 10A
Operating Voltage: 300V
Dielectric Withstand: 3500V

Environmental Properties

Operating Temperature Range: -60ºC to +105ºC (-76ºF to +221ºF)

Note: Before ordering, see Cross Reference in Section 15 for equivalent Tyco Electronics Part Number.

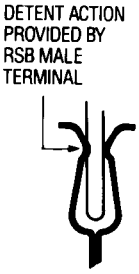

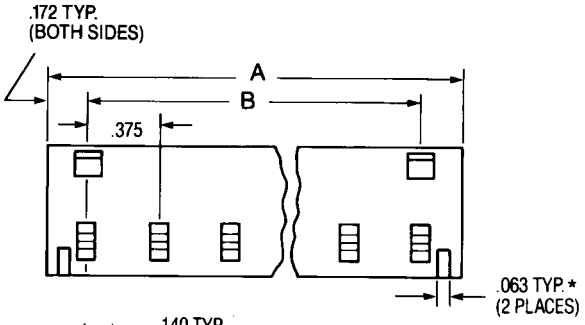

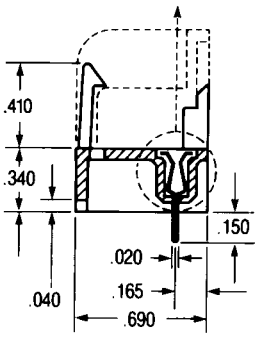

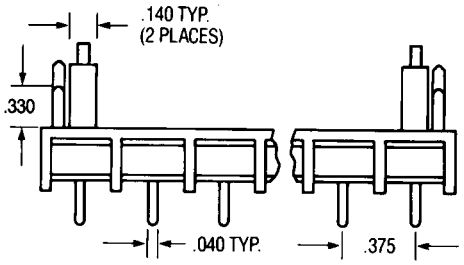

Ordering Information

CATALOG NUMBER	NO. OF CIRCUITS	A IN.	B IN.
RSB6B02S	02	.720	.375
RSB6B03S	03	1.094	.750
RSB6B04S	04	1.469	1.125
RSB6B05S	05	1.844	1.500
RSB6B06S	06	2.219	1.875
RSB6B07S	07	2.594	2.250
RSB6B08S	08	2.869	2.625
RSB6B09S	09	3.244	3.000
RSB6B10S	10	3.720	3.375

NOTE: RSB Tri-Barrier Blocks should be ordered with Number 12 Terminal style (printed circuit pin, V mounting) when used in combination with this plug-in socket.

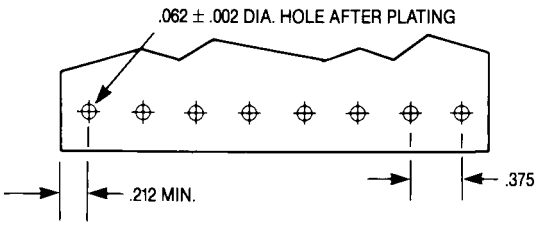

Recommended PCB Hole Pattern

LR50811 E63810

For complete product information, order Catalog 1308389

Products for Industrial & Commercial Applications

Dimensions are shown for reference purposes only.

Dimensions are in inches and millimeters unless otherwise specified. Values in brackets are metric equivalents.

Specifications subject to change.

Technical Support Center
1-800-522-6752
www.tycoelectronics.com

Barrier Strip Covers

For Series BC6, #3, JC6

MOUNTING

TC 3: Aluminum mounting bushings and screws
TC 2, 9: Plastic fasteners attached to block with thru-bolts and nuts (not supplied)

CENTER SPACING

TC 3: 0.250 inch
TC 2, 9: 0.375 inch
MATERIAL: Clear, rigid PVC, UL94V-0

For Series #4, #6, #8

PHYSICAL PROPERTIES

CENTERLINE SPACING: 8,2/(.325) - 9,5/(.375) 11,1/(.4375)
POSITIONS: 2 thru 16, molded to length
MATERIAL: Black, thermoplastic, UL94V-0
SHOCK AND VIBRATION: to MIL.STD. 1344 method 2005.1 Condition III.

Note: Before ordering, see Cross Reference in Section 15 for equivalent Tyco Electronics Part Number.



For Series BC6, #3, JC6

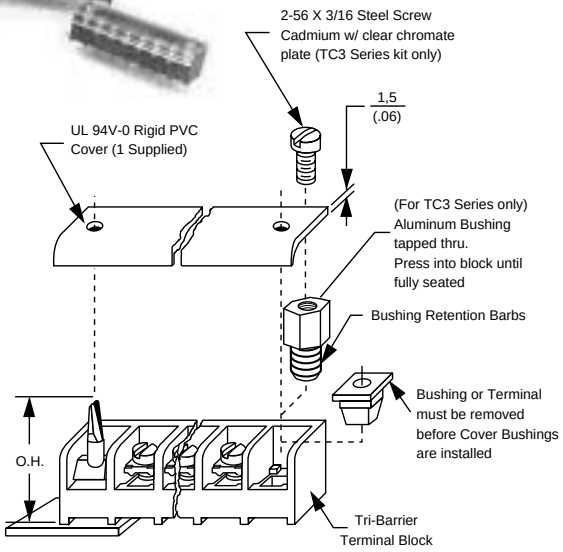

ORDERING INFORMATION

TC 4 - 06 - PFH - CL

Ⓐ Ⓑ Ⓒ Ⓓ Ⓔ

Ⓐ Series
TC = Cover

Ⓑ Center Spacing
2 = BC6 Series
3 = #3 Series
4 = #4 Series
6 = #6 Series
8 = #8 Series
9 = JC6 Series

Ⓒ No. of Circuits (Not positions)
02 through **24** for Series BC6, JC6
02 through **30** for Series #3
02 through **16** for Series #4, #6, #8

Ⓓ Access Holes
PF* = Press Fit without holes
PFH* = Press Fit with holes
AG = Adder for Series BC6, #3, JC6

Ⓔ Color (add for Series #4, #6, #8 only)
(blank) = Black (Series BC6, #3, JC6 are clear)
CL = Translucent (Available only for Series #4, #6, #8)

Overall Height (O.H.)		
TC2	TC3	TC9
0.970"	0 .650"	0.970"



For Series #4, #6, #8

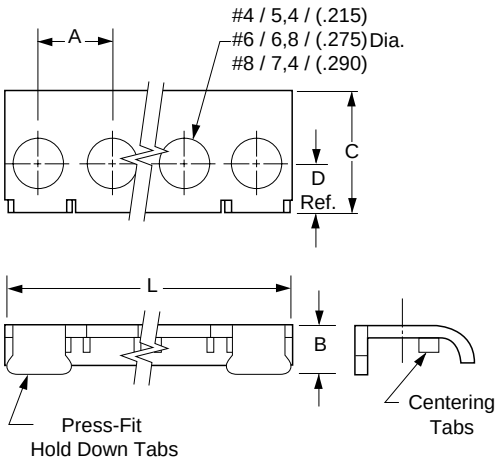

* ADD FOR SERIES #4, #6, #8

CATALOG #	A	B	C	D REF.	L
TC4	8,2 (.325)	6,0 (.238)	13,5 (.531)	5,7 (.225)	A* (N-1)+7,9/(.312) #4
TC6	9,5 (.375)	6,3 (.250)	14,3 (.562)	6,4 (.253)	A* (N-1)+(,4/(.370) #6
TC8	11,1 (.4375)	8,1 (.314)	21,5 (.846)	11,1 (.4375)	A* (N-1)+10,9/(.430) #8

For complete product information, order Catalog 1308389

LR30811 E54800

Products for Industrial & Commercial Applications

Dimensions are shown for reference purposes only.

Dimensions are in inches and millimeters unless otherwise specified. Values in brackets are metric equivalents.

Specifications subject to change.

Technical Support Center
1-800-522-6752
www.tycoelectronics.com

0.200" Pitch PCB1A Series



Physical Properties

Housing

Housing Material: Polyester
Flammability: UL94V-0
Color: White

Terminal

Tubular Contact: Brass
PC Contact: Phosphor Bronze with Bright Tin or Gold over Nickel plating
Screw: Steel with Zinc + Chromate plating
Clamp: Brass

Mechanical

Pitch (Terminal Spacing): .200"
Screw Size: 6-32
Mounting Screw Size: #4 or #6
Wire Strip Length: .25"
Recommended Tightening Torque: 5-8 in-lbs.
Recommended Screwdrivers: Xcelite R184, Sears Craftsman 41429, Stanley 1016
Board Insertion Force (Typ.) per Ckt.: 5.6 oz. (160g)
Board Separation Force (Typ.) per Ckt.: 1.8 oz. (50g)
Durability: Passes MIL-C-21097: 500 cycles

Electrical Properties

Maximum Current: 10A
Operating Voltage: 250V
Wire Range: #12 Stranded Only
Dielectric Withstand: 2500V
Insulation Resistance: 10^{11} ohms
Contact Resistance: 6 milliohms

Environmental Properties

Operating Temperature Range:
-65ºC to +140ºC
(-85ºF to +284ºF)

Note: Before ordering, see Cross Reference in Section 15 for equivalent Tyco Electronics Part Number.

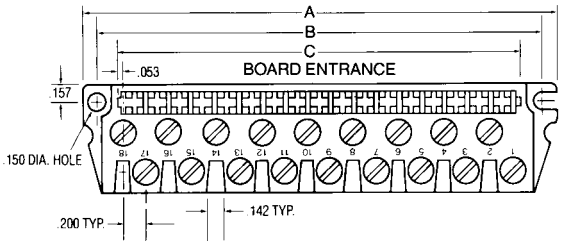

Recommended PC Board Layout

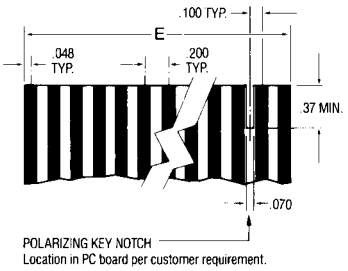

Ordering Information

CATALOG #*	NO. OF CIRCUITS	DIMENSIONS A	DIMENSIONS B	DIMENSIONS C	DIMENSIONS E
PCB1A12S	12	2.920	2.670	2.310	2.295
PCB1A18S	18	4.120	3.870	3.510	3.495
PCB1A24S	24	5.320	5.070	4.710	4.695
PCB1A30S	30	6.520	6.270	5.910	5.895
PCB1A36S	36	7.720	7.470	7.110	7.095

***NOTE:** For optional Gold-over-Nickel plating on contacts (instead of standard Bright Tin) change the letter "S" of the Catalog Number to "A".

LR25557 E63810

For complete product information, order Catalog 1308389

0.156" Pitch PCB1B Series

Physical Properties

Housing

Housing Material: Polyester
Flammability: UL94V-0
Color: Black

Terminal

Tubular Contact: Brass
PC Contact: Phosphor Bronze with Bright Tin or Gold over Nickel plating
Screw: Steel with Zinc + Chromate plating
Clamp: Brass

Mechanical

Pitch (Terminal Spacing): .156"
Screw Size: 6-32
Mounting Screw Size: #4 or #6
Wire Range: #12 Stranded Only
Wire Strip Length: .25"
Recommended Tightening Torque: 5-8 in-lbs.
Recommended Screwdrivers: Xcelite R184, Sears Craftsman 41429, Stanley 1016
Board Insertion Force (Typ.) per Ckt.: 5.6 oz. (160g)
Board Separation Force (Typ.) per Ckt.: 1.8 oz. (50g)
Durability: Passes MIL-C-21097: 500 cycles

Electrical Properties

Maximum Current: 10A
Operating Voltage: 250V
Wire Range: #12 Stranded Only
Dielectric Withstand: 3000V
Insulation Resistance: 10^{11} ohms
Contact Resistance: 6 milliohms

Environmental Properties

Operating Temperature Range:
-65ºC to +140ºC
(-85ºF to +284ºF)

Note: Before ordering, see Cross Reference in Section 15 for equivalent Tyco Electronics Part Number.



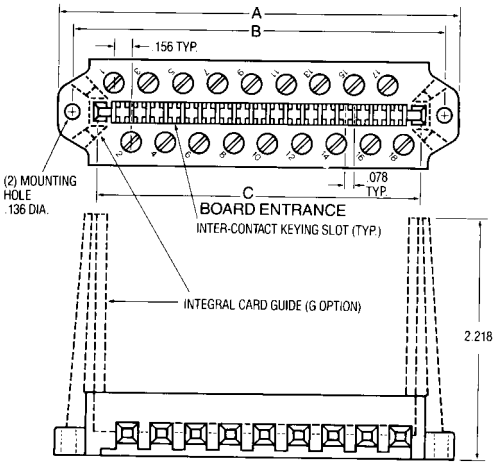

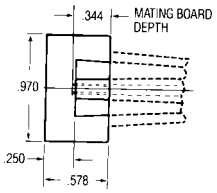

Recommended PC Board Layout

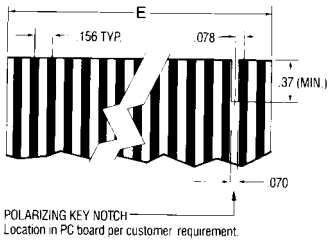

Ordering Information

CATALOG #*	NO. OF CIRCUITS	A	B	C	E
PCB1B06S	06	1.786	1.536	1.100	1.085
PCB1B08S	08	2.098	1.848	1.412	1.397
PCB1B10S	10	2.410	2.160	1.724	1.709
PCB1B12S	12	2.722	2.472	2.036	2.021
PCB1B15S	15	3.190	2.940	2.504	2.489
PCB1B16S	16	3.346	3.096	2.660	2.645
PCB1B18S	18	3.658	3.408	2.972	2.957
PCB1B22S	22	4.282	4.032	3.596	3.581
PCB1B24S	24	4.600	4.344	3.908	3.893
PCB1B28S	28	5.218	4.968	4.544	4.829
PCB1B30S	30	5.530	5.280	4.844	4.829
PCB1B32S	32	5.842	5.592	5.156	5.141
PCB1B36S	36	6.466	6.216	5.780	5.765
PCB1B43S	43	7.558	7.308	6.872	6.857

***NOTE:** For optional Gold-over-Nickel plating on contacts (instead of standard bright tin), change the letter "S" of the Catalog Number to "A".
For optional integral card guides, add the letter "G" to the end of the catalog number.

For complete product information, order Catalog 1308389

LR25557 E63810

Products for Industrial & Commercial Applications

Dimensions are shown for reference purposes only.

Dimensions are in inches and millimeters unless otherwise specified. Values in brackets are metric equivalents.

Specifications subject to change.

Technical Support Center
1-800-522-6752
www.tycoelectronics.com

0.156" Pitch PCB2B Series



Physical Properties

Housing

Housing Material: Polyester
Flammability: UL94V-0
Color: Black

Terminal

Tubular Contact: Brass
PC Contact: Phosphor Bronze with Bright Tin or Gold over Nickel plating
Screw: Steel with Zinc + Chromate plating
Clamp: Brass

Mechanical

Pitch (Terminal Spacing): .156"
Screw Size: 6-32
Mounting Screw Size: #4 or #6
Wire Strip Length: .25"
Recommended Tightening Torque: 5-8 in-lbs.
Recommended Screwdrivers: Xcelite R184, Sears Craftsman 41429, Stanley 1016
Board Insertion Force (Typ.) per Ckt.: 5.6 oz. (160g)
Board Separation Force (Typ.) per Ckt.: 1.8 oz. (50g)
Durability: Passes MIL-C-21097: 500 cycles

Electrical Properties

Maximum Current: 10A
Operating Voltage: 250V
Wire Range: #12 Stranded Only
Dielectric Withstand: 3000V
Insulation Resistance: 10^{11} ohms
Contact Resistance: 6 milliohms

Environmental Properties

Operating Temperature Range:
-65ºC to +140ºC
(-85ºF to +284ºF)

Note: Before ordering, see Cross Reference in Section 15 for equivalent Tyco Electronics Part Number.

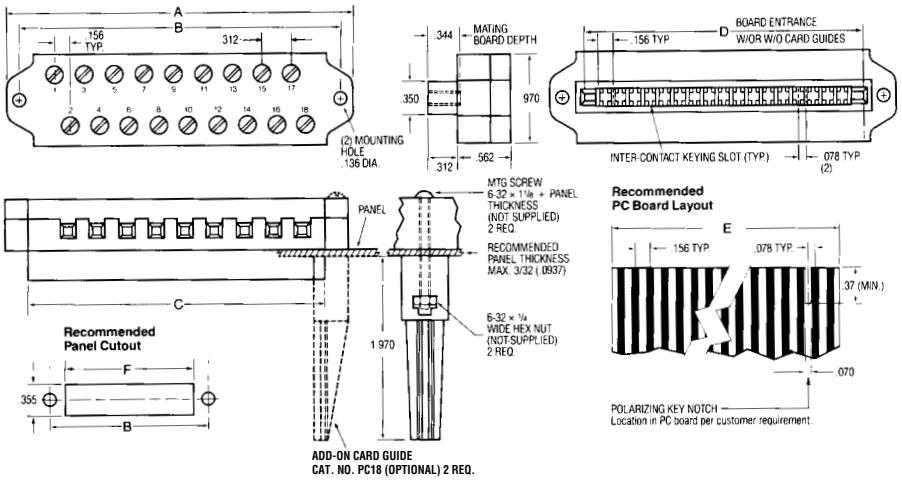

Ordering Information

CATALOG #*	NO. OF CIRCUITS	A	B	C	D	E	F(MIN.)
PCB2B06S	06	1.786	1.536	1.264	1.100	1.085	1.284
PCB2B08S	08	2.098	1.848	1.576	1.412	1.397	1.596
PCB2B09S	09	2.254	2.004	1.732	1.568	1.553	1.752
PCB2B10S	10	2.410	2.160	1.888	1.724	1.709	1.908
PCB2B12S	12	2.722	2.472	2.200	2.036	2.021	2.220
PCB2B15S	15	3.190	2.940	2.668	2.504	2.489	2.688
PCB2B16S	16	3.346	3.096	2.824	2.660	2.645	2.844
PCB2B18S	18	3.658	3.408	3.136	2.972	2.957	3.156
PCB2B22S	22	4.282	4.032	3.760	3.596	3.581	3.780
PCB2B24S	24	4.594	4.344	4.072	3.908	3.893	4.092
PCB2B28S	28	5.218	4.968	4.696	4.532	4.517	4.716
PCB2B30S	30	5.530	5.280	5.008	4.844	4.829	5.028
PCB2B32S	32	5.842	5.592	5.320	5.156	5.141	5.340
PCB2B36S	36	6.466	6.216	5.944	5.780	5.765	5.964
PCB2B43S	43	7.558	7.308	7.036	6.872	6.857	7.056

***NOTE:** For optional Gold-over-Nickel plating on contacts (instead of standard bright tin), change the letter "S" of the Catalog Number to "A".

LR25557 E63810

For complete product information, order Catalog 1308389

Products for Industrial & Commercial Applications

Dimensions are shown for reference purposes only.

Dimensions are in inches and millimeters unless otherwise specified. Values in brackets are metric equivalents.

Specifications subject to change.

Technical Support Center
1-800-522-6752
www.tycoelectronics.com

0.200" Pitch PCB3A Series



Physical Properties

Housing

Housing Material: Polyester
Flammability: UL94V-0
Color: Black

Terminal

Tubular Contact: Brass
PC Contact: Phosphor Bronze with Bright Tin or Gold over Nickel plating
Screw: Steel with Zinc + Chromate plating
Clamp: Brass

Mechanical

Pitch (Terminal Spacing): .200"
Screw Size: 6-32
Mounting Screw Size: #6
Wire Strip Length: .25"
Recommended Tightening Torque: 5-8 in-lbs.
Recommended Screwdrivers: Xcelite R184, Sears Craftsman 41429, Stanley 1016
Board Insertion Force (Typ.) per Ckt.: 5.6 oz. (160g)
Board Separation Force (Typ.) per Ckt.: 1.8 oz. (50g)
Durability: Passes MIL-C-21097: 500 cycles

Electrical Properties

Maximum Current: 10A
Operating Voltage: 250V
Wire Range: #12 Stranded Only
Dielectric Withstand: 2500V
Insulation Resistance: 10^{11} ohms
Contact Resistance: 6 milliohms

Environmental Properties

Operating Temperature Range:
-65ºC to +140ºC
(-85ºF to +284ºF)

Note: Before ordering, see Cross Reference in Section 15 for equivalent Tyco Electronics Part Number.

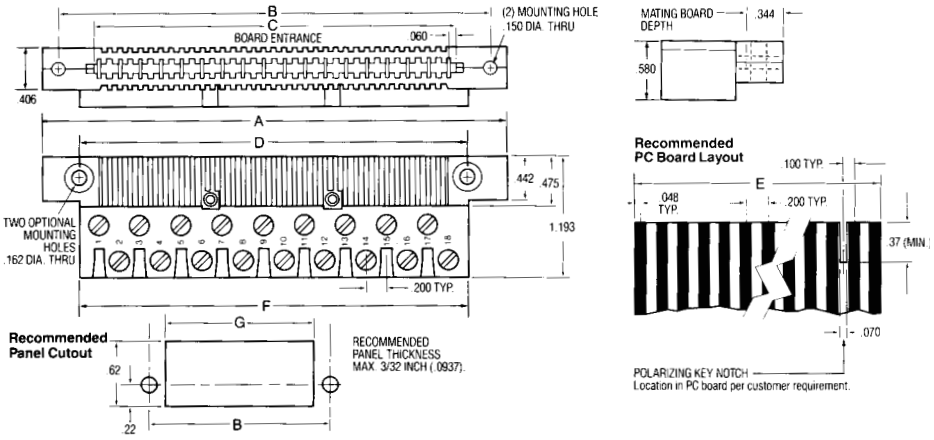

Ordering Information

CATALOG #*	NO. OF CIRCUITS	A	B	C	D&F	E	G
PCB3A06S	06	2.150	1.800	1.120	1.400	1.105	1.43
PCB3A08S	08	2.550	2.200	1.520	1.800	1.505	1.83
PCB3A10S	10	2.950	2.600	1.920	2.200	1.905	2.23
PCB3A12S	12	3.350	3.000	2.320	2.600	2.305	2.63
PCB3A15S	15	3.950	3.600	2.920	3.200	2.905	3.23
PCB3A16S	16	4.150	3.800	3.120	3.400	3.105	3.43
PCB3A18S	18	4.550	4.200	3.520	3.800	3.505	3.83
PCB3A20S	20	4.950	4.600	3.920	4.200	3.905	4.23
PCB3A22S	22	5.350	5.000	4.320	4.600	4.305	4.63
PCB3A24S	24	5.750	5.400	4.720	5.000	4.705	5.03
PCB3A30S	30	6.950	6.600	5.920	6.200	5.905	6.23
PCB3A32S	32	7.350	7.000	6.320	6.600	6.305	6.63
PCB3A34S	34	7.750	7.400	6.720	7.000	6.705	7.03
PCB3A36S	36	8.150	7.800	7.120	7.400	7.105	7.43
PCB3A44S	44	9.750	9.400	8.720	9.000	8.705	9.03

***NOTE:** For optional Gold-over-Nickel plating on contacts (instead of standard bright tin), change the letter "S" of the Catalog Number to "A".

LR25557 E63810

For complete product information, order Catalog 1308389

Products for Industrial & Commercial Applications

Dimensions are shown for reference purposes only.

Dimensions are in inches and millimeters unless otherwise specified. Values in brackets are metric equivalents.

Specifications subject to change.

Technical Support Center
1-800-522-6752
www.tycoelectronics.com

0.150" Pitch Face Connector



Physical Properties

Housing:

Housing Material: Glass filled polyester
Flammability: UL94V-0
Color: black

Terminal

Contact: Copper alloy, selective gold over nickel
Screw: #3-48 steel, zinc plating with clear chromate coating
Cam: steel alloy, zinc plating with clear chromate coating

Mechanical

Pitch (Terminal Spacing): .150"
Screws: #3-48 steel, zinc plating with clear chromate coating
Wire Range: 14-22 AWG (solid or stranded)
Recommended Tightening Torque: 5 in-lbs.

Electrical Properties

Maximum Current: 15A
Operating Voltage: 300V
Dielectric Withstand: Tested to 1600V

Environmental Properties

Max. Operating Temperature: 130°C

Note: Before ordering, see Cross Reference in Section 15 for equivalent Tyco Electronics Part Number.

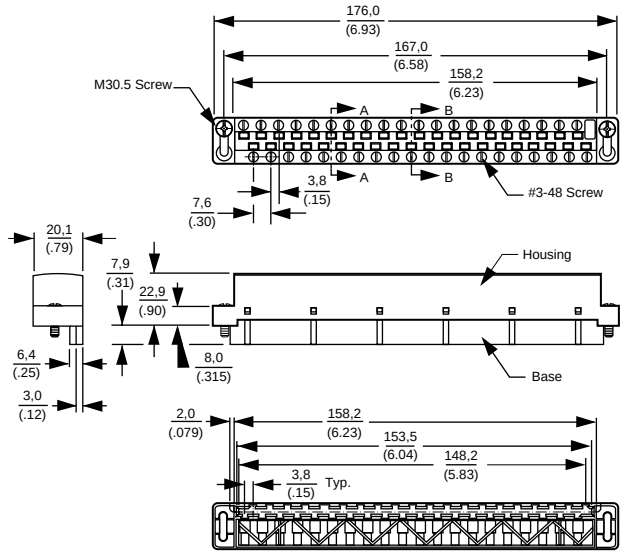

Ordering Information

CATALOG #	DESCRIPTION
FACE-40	40 circuit connector

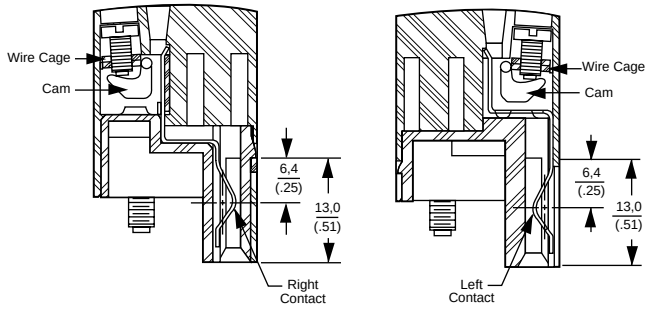

Section A-A **Section B-B**

E54800

For complete product information, order Catalog 1308389

Products for Industrial & Commercial Applications

Dimensions are shown for reference purposes only.

Dimensions are in inches and millimeters unless otherwise specified. Values in brackets are metric equivalents.

Specifications subject to change.

Technical Support Center
1-800-522-6752
www.tycoelectronics.com

D-Sub Connector

PHYSICAL PROPERTIES

Connectors:

HOUSING MATERIAL: Thermoplastic polyester.
FLAMMABILITY: UL94V-0
TERMINALS: Copper alloy, selective gold over nickel
SHELL MATERIAL: Bright tin plated, female screw locks installed

Terminal Block (2MA Series):

HOUSING MATERIAL: Thermoplastic polyester
FLAMMABILITY: UL94V-0
COLOR: Black
MAX. OPERATING TEMPERATURE: 120°C
TERMINALS: Bright acid-tin over copper alloy
SCREWS: #3-48, steel zinc plated
WIRE RANGE: 12-22 AWG
MOUNTING: 2TK2 and 2TK2D Series SNAPTRACK Channel

Note: Before ordering, see Cross Reference in Section 15 for equivalent Tyco Electronics Part Number.



2M25DSM

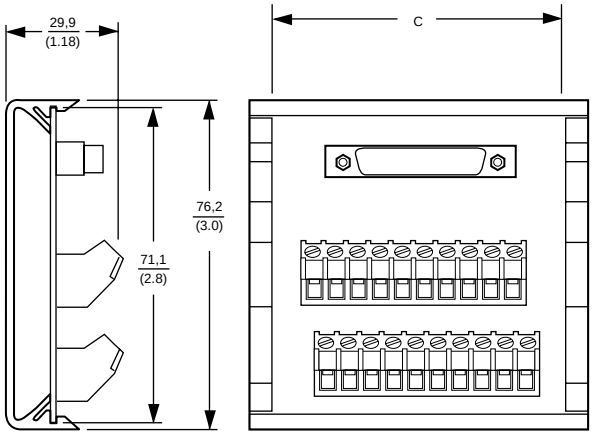

Ordering Information

# OF POSITIONS	CATALOG** NUMBER	C
09	2M09DSM	(1.50) 38,1
15	2M15DSM	(2.10) 53,3
25	2M25DSM	(3.10) 78,7
37	2M37DSM	(4.31) 109,5
50	2M50DSM	(5.93) 150,6

Note: Female D-Sub connector available as 2MXXDSF. Consult Technical Support Center.

Products for Industrial & Commercial Applications

Dimensions are shown for reference purposes only.

Dimensions are in inches and millimeters unless otherwise specified. Values in brackets are metric equivalents.

Specifications subject to change.

Technical Support Center
1-800-522-6752
www.tycoelectronics.com

Flat Cable Connector

PHYSICAL PROPERTIES

Connector:

HEADER: Brass, gold over nickel, 94V-0 thermoplastic
CONNECTOR: Copper alloy; gold over nickel 94V-0 thermoplastic
WIRE RANGE: 26-30 AWG solid, 28 AWG stranded
MAXIMUM CURRENT: 1 Ampere

Terminal Block (2MA Series):

HOUSING MATERIAL: Thermoplastic polyester
FLAMMABILITY: UL94V-0
COLOR: Black
MAX. OPERATING TEMPERATURE: 120°C
TERMINALS: Bright acid-tin over copper alloy
SCREWS: #3-48, steel zinc plated
WIRE RANGE: 12-22 AWG
MOUNTING: 2TK2 and 2TK2D Series SNAPTRACK Channel

Note: Before ordering, see Cross Reference in Section 15 for equivalent Tyco Electronics Part Number.



2M34FC

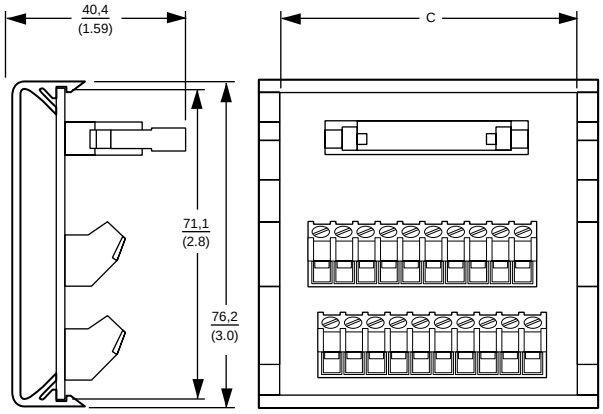

Ordering Information

# 0F POSITIONS	CATALOG NUMBER	C
10	2M10FC	38,1 (1.50)
14	2M14FC	53,3 (2.10)
16	2M16FC	58,4 (2.30)
20	2M20FC	68,6 (2.70)
26	2M26FC	81,3 (3.20)
34	2M34FC	104,1(4.10)
40	2M40FC	119,4 (4.70)
50	2M50FC	139,7 (5.50)
60	2M60FC	165,1 (6.50)
64	2M64FC	170,2 (6.70)

Note: Strain relief connector supplied with all assemblies.

For complete product information, order Catalog 1308389

Products for Industrial & Commercial Applications

Dimensions are shown for reference purposes only.

Dimensions are in inches and millimeters unless otherwise specified. Values in brackets are metric equivalents.

Specifications subject to change.

Technical Support Center
1-800-522-6752
www.tycoelectronics.com

SNAPTRACK Channel

DESCRIPTION

SNAPTRACK Channel can be mounted on standard DIN rails or A Series rail when used with TKAD. (Rails not included.)
SNAPTRACK Channel is a nonconductive, rigid extruded PVC chassis used for mounting socket assemblies and custom circuit boards. Available in a variety of fixed widths, including a split-apart version for wider PCB applications, SNAPTRACK Channel mounts to panels quickly with rivets or screws.
Printed circuit boards are simply snapped-in from the front, then held securely via intergral ribs which also serve as shock absobers when the PCB is flexed. SNAPTRACK Channel permits easy, convenient PCB removal for field service. Slots on 2-inch centers are provided for fast, easy installation using either plastic rivets or other hardware. Double-faced tape may also be used effectively.



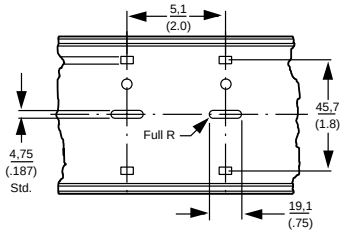

TK2D, 2TK2D, 3TK2D, 6TK2D Panel Mount, or use with TKAD to Mount on DIN Rail and A Series Rail

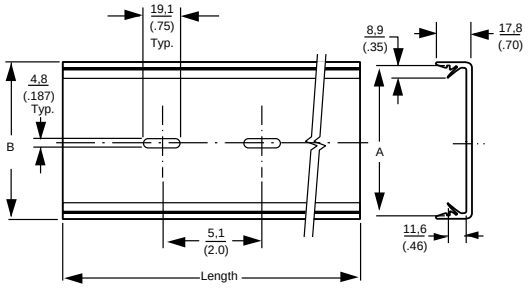

TK2, 3TK2, 8TK2, 2TK2, 6TK2 Panel Mount

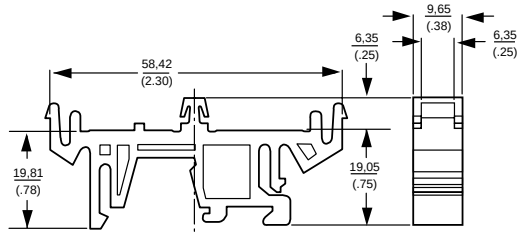

TKAD use with SNAPTRACK Channel to Mount on DIN Rail or A Series Rail

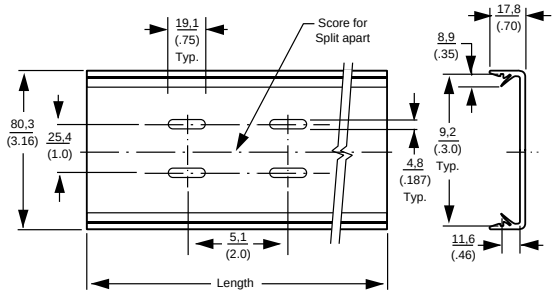

4TK2 Panel Mount

Ordering Information

TRACK	A P.C. BOARD WIDTH	B OVERALL TRACK WIDTH
8TK2-48	55,5 (2.187)	58,4 (2.3)
2TK2-48	69,9 (2.75)	73,7 (2.9)
2TK2D-48	69,9 (2.75)	73,7 (2.9)
TK2-48-AG	76,2 (3.0)	78,7 (3.1)
TK2D-48-AG	76,2 (3.0)	78,7 (3.1)
3TK2-48	82,6 (3.25)	86,4 (3.40)
3TK2D-48	82,6 (3.25)	86,4 (3.40)
6TK2-48	101,6 (4.0)	105,4 (4.15)
6TK2D-48	101,6 (4.0)	105,4 (4.15)
4TK2-48	SPLIT-APART	

Note: Standard length is 48". Custom cutting available 1" to 48"; consult Technical Support Center.

Note: Before ordering, see Cross Reference in Section 15 for equivalent Tyco Electronics Part Number.

For complete product information, order Catalog 1308389

LR49571 E58648

Products for Industrial & Commercial Applications

Dimensions are shown for reference purposes only.

Dimensions are in inches and millimeters unless otherwise specified. Values in brackets are metric equivalents.

Specifications subject to change.

Technical Support Center
1-800-522-6752
www.tycoelectronics.com

Accessories

TRACK RIVETS

Plastic Track Rivet offers a low cost way to mount SNAPTRACK Channel. Requires 3/16" diameter hole in panels up to .125" thick. Cat. No. TR-1

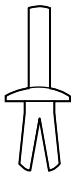

TR-1 Track Rivet

BAILS (TIE DOWNS)

Helps prevent relays and timers from vibrating out of sockets. RB1-AG and TB1, for general purpose relays and timers, feature adjustable height; mount on PC board with plastic mounting rivets (2) furnished. New economy RB5 spring bails fits most general purpose relays and timers. RB4 clip to miniature sockets. Stainless steel wire.

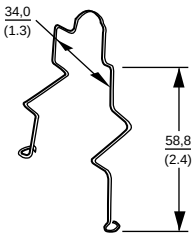

RB1-AG Relay Bail

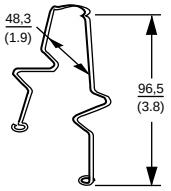

TB1 Timer Bail

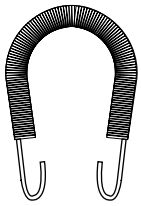

RB5-AG Universal Bail

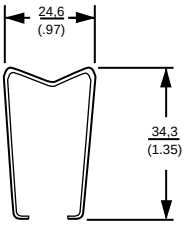

RB4-AG

LR49571 E60980

Introduction

Description / Application

Tyco Electronics Corporation offers the most extensive line of Europa products in five pitches:

- 8mm
- 10mm
- 12mm
- 13.5mm
- 14.5mm

Two connection styles are available. The Wire Protector version supplies a plate to shield the wire from being cut by the screw. The Tunnel connection is the same design, but without the shielding plate – it is ideal for solid wire or where the most economical price is required.

Applications include:

- Motor Controls
- Power Supplies
- Telecom
- Valve Actuators
- Spa Controllers
- Lighting

Design Advantages

- Modular design — cut into smaller sections without altering electrical properties or order product molded to length. Mounting holes between every circuit.
- Tubular contacts — connect stripped, unterminated solid or stranded wire directly to each contact — no wire lugs needed.
- High voltage and current ratings — rated up to 600 volts and up to 65 amps depending on model and wire size used.
- Broad Wire Range — use wire from #6 to #26 AWG depending on model selected.

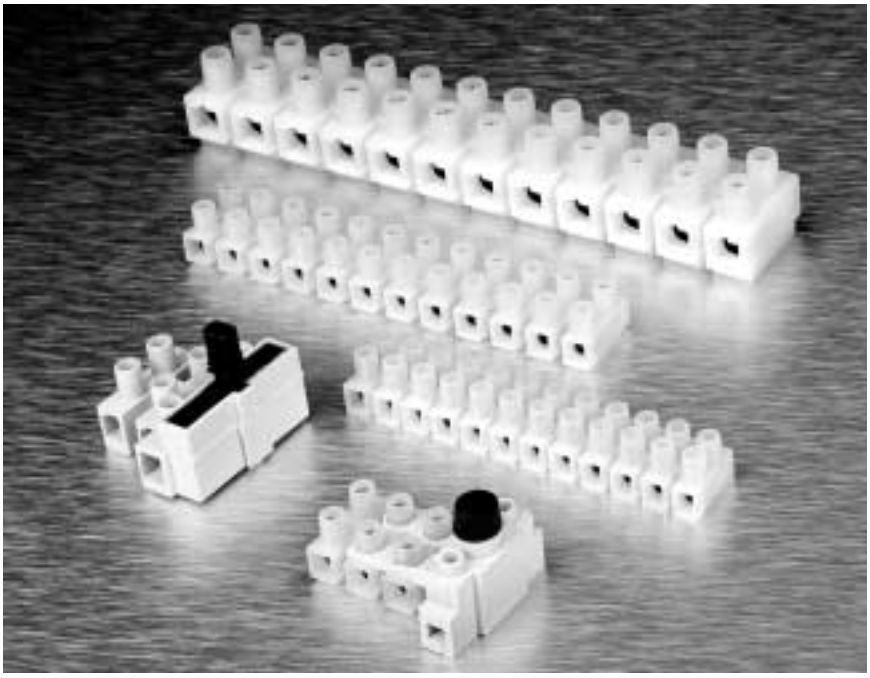

- Wire protectors — all models available with wire protectors to virtually eliminate twisting and breakage of stranded wire during connection.
- High circuit density — five models provide from 21 to 38 circuits per foot.
- “Dead-front” construction — both screws and tubular contacts are recessed in housing for safety and to help prevent short circuits.
- Captive screws — zinc with chromate plated steel screws are captive in tin plated brass contacts. They are supplied “backed-out” and ready to wire.
- Flammability rating of UL94V-2 is standard. High Temperature versions with UL94V-0 are available.

For complete product information, order Catalog 1308389

Products for Industrial & Commercial Applications

Dimensions are shown for reference purposes only.

Dimensions are in inches and millimeters unless otherwise specified. Values in brackets are metric equivalents.

Specifications subject to change.

Technical Support Center
1-800-522-6752
www.tycoelectronics.com

Europa Selector Chart

Panel Mounted Modular Blocks

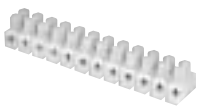
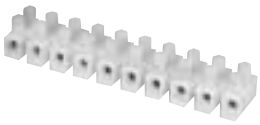




Series	TSB230	TSB230...HT	TSB500	TSB500...HT	TSB500SK	500Si	503Si
Pitch (mm)	8mm	8mm	10mm	10mm	10mm	10, 12mm	10mm
(in.)	.315”	.315”	.394”	.394”	.394”	.394”, .472”	.394”
Circuits	1-12	1-12	1-12	1-12	1-12	1	1-5
Max. Current							
Wire protector	30A	30A	30A	30A	30A	—	10A
Tunnel connection	30A	—	40A	—	30A	10A	10A
Max. Voltage	250V	250V	250V	250V	600V	250V	250V
Wire Range (AWG)							
Wire protector	12-26	12-26	10-24	12-24	12-24	—	12-22
Tunnel connection	12-24	—	10-22	—	10-22	12-22	12-22
Flammability	UL94V-2	UL94V-0	UL94V-2	UL94V-0	UL94V-2	UL94V-2	UL94V-2
Max. Temp.	100˚C	150˚C	100˚C	150˚C	100˚C	100˚C	100° C
Page	8090	8091	8092	8093	8094	8100	8095

For complete product information, order Catalog 1308389

Products for Industrial & Commercial Applications

Dimensions are shown for reference purposes only.

Dimensions are in inches and millimeters unless otherwise specified. Values in brackets are metric equivalents.

Specifications subject to change.

Technical Support Center
1-800-522-6752
www.tycoelectronics.com

Europa Selector Chart (Continued)

Panel Mounted Modular Blocks

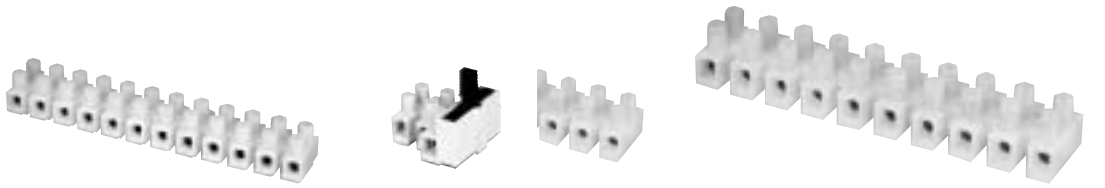

Series	TSB1000	TSB1000...HT	TSB1000...US	1003Si	TSB1500	TSB2000	TSB2000...HT	TSB2000...US
Pitch (mm) (in.)	12mm .472"	12mm .472"	12mm .472"	7/12mm .275-.472"	13.5mm .532"	14.5mm .571"	14.5mm .571"	14.5mm .571"
Circuits	1-12	1-12	1-12	1-5	1-12	1-12	1-12	1-12
Max. Current								
Wire protector	40A	40A	40A	16A	40A	65A	65A	65A
Tunnel connection	40A	—	40A	16A	40A	65A	65A	65A
Max. Voltage	250V	250V	600V	250V	300V	300V	300V	600V
Wire Range (AWG)								
Wire protector	10-22	10-24	10-24	10-24	8-18	6-14	6-14	6-14
Tunnel connection	8-22	—	8-22	8-22	8-16	6-14	6-14	6-14
Flammability	UL94V-2	UL94V-0	UL94V-2	UL94V-2	UL94V-2	UL94V-2	UL94V-0	UL94V-2
Max. Temp.	100˚C	150˚C	100˚C	100˚C	100˚C	100˚C	150˚C	100˚C
Page	8096	8097	8098	8099	Order Catalog 1308389	Order Catalog 1308389	Order Catalog 1308389	Order Catalog 1308389

For complete product information, order Catalog 1308389

Products for Industrial & Commercial Applications

Dimensions are shown for reference purposes only.

Dimensions are in inches and millimeters unless otherwise specified. Values in brackets are metric equivalents.

Specifications subject to change.

Technical Support Center
1-800-522-6752
www.tycoelectronics.com

8mm Pitch, 30A with Wire Protector—Series TSB230

Physical Properties

Housing:

Housing Material: Polyamide 6
Flammability: UL94V-2
Color: natural (off white)

Terminal:

Tubular Contact: Brass, tin plated
Screw: Steel, M3
Screw Plating: Zinc with chromate
Wire Protector: Stainless steel

Mechanical:

Pitch (terminal spacing): 8mm (.315")
Wire Strip Length: 5mm (0.20")
Min. Wire Pull-Out Force: 75lbs.
Recommended Tightening Torque: 5in.- lbs.
Recommended Screwdrivers: Stanley 1016, Sears Craftsman 41429, Xcelite R184

Electrical Properties

Maximum Current: 30A
Operating Voltage: 250V
Wire Range: 12-26 AWG
Dielectric Withstand: 3000V

Environmental Properties

Continuous Working Temperature: 100°C

Note: Before ordering, see Cross Reference in Section 15 for equivalent Tyco Electronics Part Number.

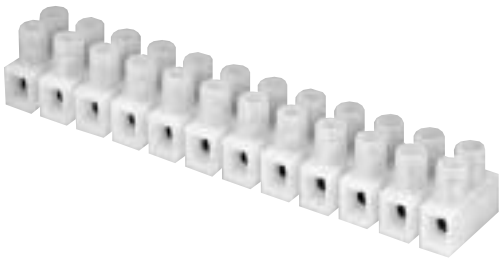

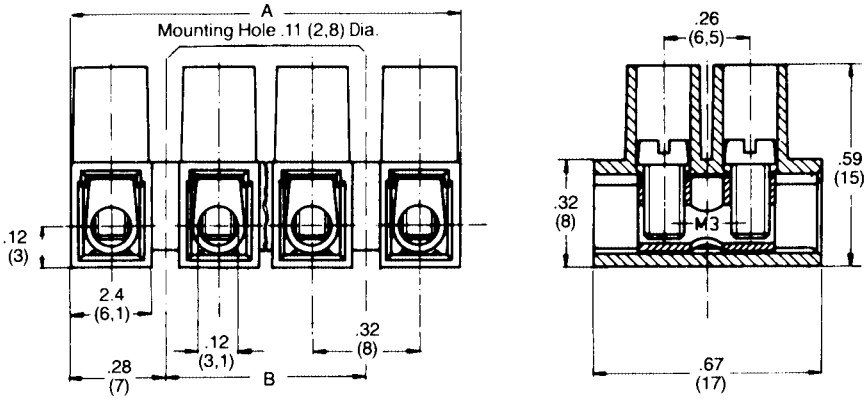

Ordering Information

NO. OF POS.	CATALOG NUMBER WIRE PROTECTOR	A	B
1	TSB230 01DS	6 (.24)	—
2	TSB230 02DS	14 (.55)	—
3	TSB230 03DS	22 (.87)	8 (.31)
4	TSB230 04DS	30 (1.18)	16 (.63)
5	TSB230 05DS	38 (1.50)	24 (.94)
6	TSB230 06DS	46 (1.81)	32 (1.26)
7	TSB230 07DS	54 (2.13)	40 (1.57)
8	TSB230 08DS	62 (2.44)	48 (1.89)
9	TSB230 09DS	70 (2.76)	56 (2.20)
10	TSB230 10DS	78 (3.07)	64 (2.52)
11	TSB230 11DS	86 (3.39)	72 (2.83)
12	TSB230 12DS	94 (3.70)	80 (3.15)

LR28387 E63810

For complete product information, order Catalog 1308389

Products for Industrial & Commercial Applications

Dimensions are shown for reference purposes only.

Dimensions are in inches and millimeters unless otherwise specified. Values in brackets are metric equivalents.

Specifications subject to change.

Technical Support Center
1-800-522-6752
www.tycoelectronics.com

8mm Pitch, 30A, High Temperature—Series TSB230...HT

Physical Properties

Housing:

Housing Material: Polyamide 6/6
Flammability: UL94V-0
Housing Color: **Brown**

Terminal:

Tubular Contact: Brass, tin plated
Screw: Steel, M3
Screw Plating: Zinc with chromate
Wire Protector: Stainless steel

Mechanical:

Pitch (terminal spacing): 8mm (.315)
Wire Strip Length: 5mm (0.20")
Min. Wire Pull-Out Force: 75lbs.
Recommended Tightening Torque: 5in.- lbs.
Recommended Screwdrivers: Stanley 1016, Sears Craftsman 41429, Xcelite R184

Electrical Properties

Maximum Current: 30A
Operating Voltage: 250V
Wire Range: 12-26 AWG
Dielectric Withstand: 3000V

Environmental Properties

Continuous Working Temperature: 150°C

Note: Before ordering, see Cross Reference in Section 15 for equivalent Tyco Electronics Part Number.

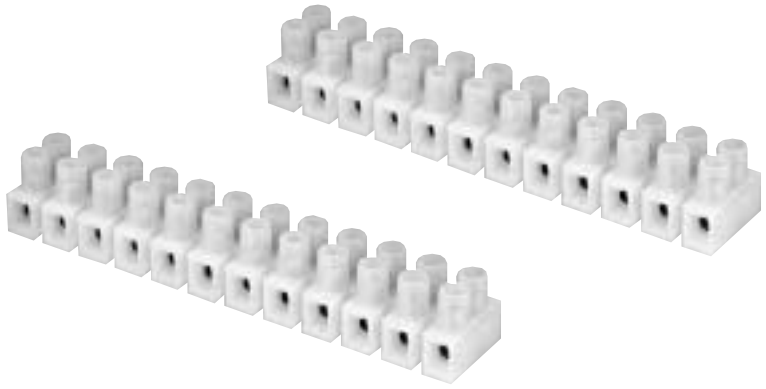

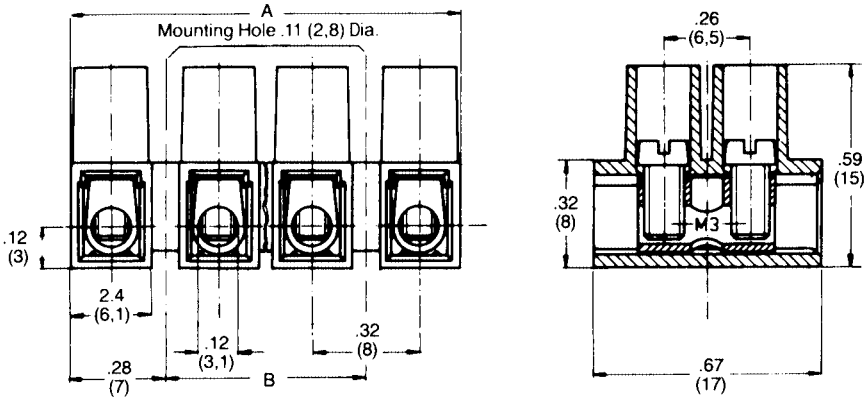

Ordering Information

NO. OF POS.	CATALOG NUMBER WIRE PROTECTOR	A	B
1	TSB230 01DS HT	6 (.24)	—
2	TSB230 02DS HT	14 (.55)	—
3	TSB230 03DS HT	22 (.87)	8 (.31)
4	TSB230 04DS HT	30 (1.18)	16 (.63)
5	TSB230 05DS HT	38 (1.50)	24 (.94)
6	TSB230 06DS HT	46 (1.81)	32 (1.26)
7	TSB230 07DS HT	54 (2.13)	40 (1.57)
8	TSB230 08DS HT	62 (2.44)	48 (1.89)
9	TSB230 09DS HT	70 (2.76)	56 (2.20)
10	TSB230 10DS HT	78 (3.07)	64 (2.52)
11	TSB230 11DS HT	86 (3.39)	72 (2.83)
12	TSB230 12DS HT	94 (3.70)	80 (3.15)

Note: Minimum order quantities may apply.

LR28387 E63810

For complete product information, order Catalog 1308389

10mm Pitch, 30A With Wire Protector—Series TSB500

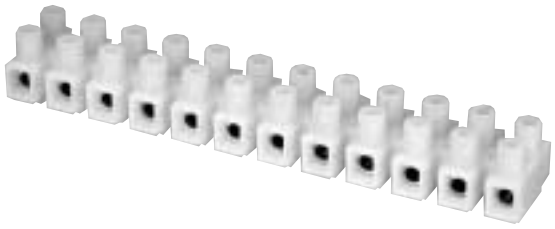

Physical Properties

Housing:

Housing Material: Polyamide 6
Flammability: UL94V-2
Color: Natural (off white)

Terminal:

Tubular Contact: Brass, tin plated
Screw: Steel, M3
Screw Plating: Zinc with chromate
Wire Protector: Stainless steel

Mechanical:

Pitch (terminal spacing): 10mm (.394)
Wire Strip Length: 5mm (0.20")
Min. Wire Pull-Out Force: 75lbs.
Recommended Tightening Torque: 5 in.- lbs.
Recommended Screwdrivers: Stanley 1016, Sears Craftsman 41429, Xcelite R184

Electrical Properties

UL Maximum Current: 30A; 10-22 AWG
CSA Maximum Current: 25A; 12-24 AWG
Operating Voltage: 250V
Dielectric Withstand: 3500V

Environmental Properties

Continuous Working Temperature: 100°C

Note: Before ordering, see Cross Reference in Section 15 for equivalent Tyco Electronics Part Number.

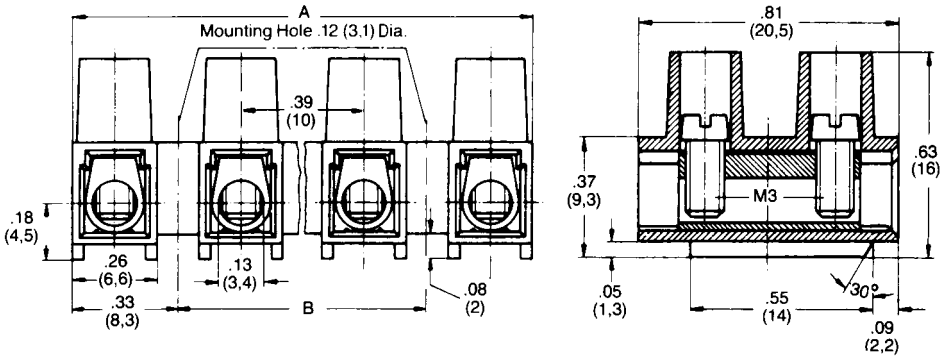

Ordering Information

NO. OF POS.	CATALOG NUMBER WIRE PROTECTOR	A	B
1	TSB500 0131DS	6,6 (.26)	—
2	TSB500 0231DS	16,6 (.65)	—
3	TSB500 0331DS	26,6 (1.05)	10 (.39)
4	TSB500 0431DS	36,6 (1.44)	20 (.79)
5	TSB500 0531DS	46,6 (1.83)	30 (1.18)
6	TSB500 0631DS	56,6 (2.23)	40 (1.57)
7	TSB500 0731DS	66,6 (2.62)	50 (1.97)
8	TSB500 0831DS	76,6 (3.02)	60 (2.36)
9	TSB500 0931DS	86,6 (3.41)	70 (2.76)
10	TSB500 1031DS	96,6 (3.80)	80 (3.15)
11	TSB500 1131DS	106,6 (4.20)	90 (3.54)
12	TSB500 1231DS	116,6 (4.59)	100 (3.94)

LR28387 E63810

For complete product information, order Catalog 1308389

Products for Industrial & Commercial Applications

Dimensions are shown for reference purposes only.

Dimensions are in inches and millimeters unless otherwise specified. Values in brackets are metric equivalents.

Specifications subject to change.

Technical Support Center
1-800-522-6752
www.tycoelectronics.com

10mm Pitch, 30A High Temperature—Series TSB500...HT

Physical Properties

Housing:

Housing Material: Polyamide 6/6
Flammability: UL94V-0
Housing Color: **Brown**

Terminal:

Tubular Contact: Brass, tin plated
Screw: Steel, M3
Screw Plating: Zinc with chromate
Wire Protector: Stainless steel

Mechanical:

Pitch (terminal spacing): 10mm (.394)
Wire Strip Length: 5mm (0.20")
Min. Wire Pull-Out Force: 75lbs.
Recommended Tightening Torque: 5 in.- lbs.
Recommended Screwdrivers: Stanley 1016, Sears Craftsman 41429, Xcelite R184

Electrical Properties

Maximum Current: 30A
Operating Voltage: 250V
Wire Range: 12-24 AWG
Dielectric Withstand: 3500V

Environmental Properties

Continuous Working Temperature: 150°C

Note: Before ordering, see Cross Reference in Section 15 for equivalent Tyco Electronics Part Number.

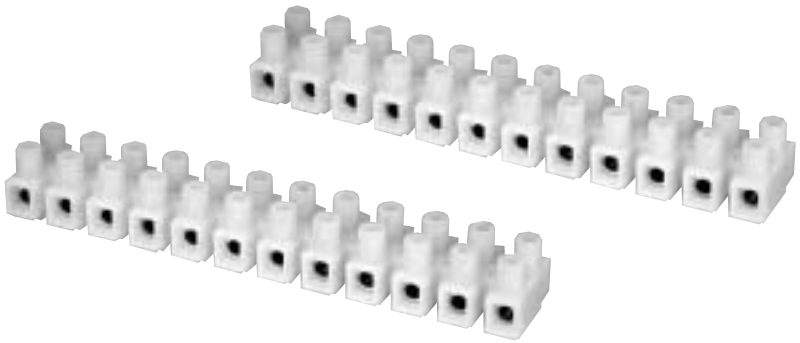

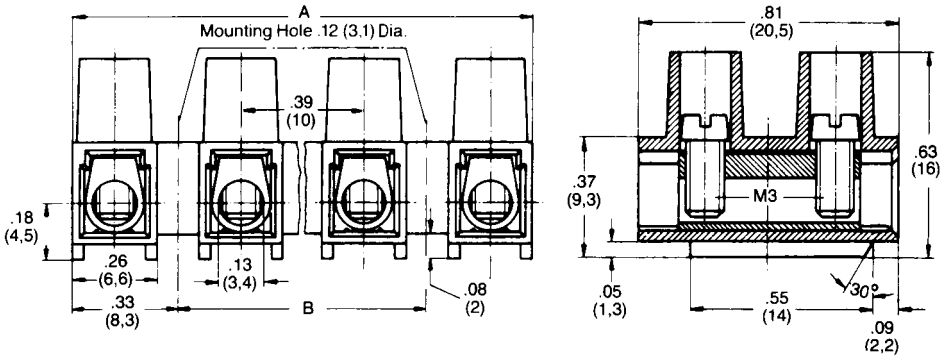

Ordering Information

NO. OF POS.	CATALOG NUMBER WIRE PROTECTOR	A	B
1	TSB500 0131DS HT	6,6 (.26)	—
2	TSB500 0231DS HT	16,6 (.65)	—
3	TSB500 0331DS HT	26,6 (1.05)	10 (.39)
4	TSB500 0431DS HT	36,6 (1.44)	20 (.79)
5	TSB500 0531DS HT	46,6 (1.83)	30 (1.18)
6	TSB500 0631DS HT	56,6 (2.23)	40 (1.57)
7	TSB500 0731DS HT	66,6 (2.62)	50 (1.97)
8	TSB500 0831DS HT	76,6 (3.02)	60 (2.36)
9	TSB500 0931DS HT	86,6 (3.41)	70 (2.76)
10	TSB500 1031DS HT	96,6 (3.80)	80 (3.15)
11	TSB500 1131DS HT	106,6 (4.20)	90 (3.54)
12	TSB500 1231DS HT	116,6 (4.59)	100 (3.94)

Note: Minimum order quantities may apply.

LR28387 E63810

For complete product information, order Catalog 1308389

Products for Industrial & Commercial Applications

Dimensions are shown for reference purposes only.

Dimensions are in inches and millimeters unless otherwise specified. Values in brackets are metric equivalents.

Specifications subject to change.

Technical Support Center
1-800-522-6752
www.tycoelectronics.com

10mm Pitch, 30A Elongated Plastic—Series TSB500SK

Physical Properties

Housing:

Housing Material: Polyamide 6
Flammability: UL94V-2
Color: natural (off white)

Terminal:

Tubular Contact: Brass, tin plated
Screw: Steel, M3
Screw Plating: Zinc with chromate
Wire Protector: Stainless steel

Mechanical:

Pitch (terminal spacing): 10mm (.394")
Wire Strip Length: 5mm (0.20")
Min. Wire Pull-Out Force: 5 lbs.
Recommended Tightening Torque: 5 in.- lbs.
Recommended Screwdrivers: Stanley 1016, Sears Craftsman 41429, Xcelite R184

Electrical Properties

Maximum Current: 30A (UL), 25A (CSA)
Operating Voltage: 600V
Wire Range:
Wire Protector: 12-24 AWG
Tunnel Connection: 10-22 AWG
Dielectric Withstand: 3500V

Environmental Properties

Continuous Working Temperature: 100°C

Note: Before ordering, see Cross Reference in Section 15 for equivalent Tyco Electronics Part Number.



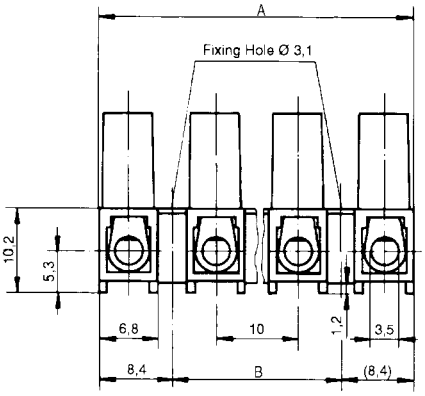

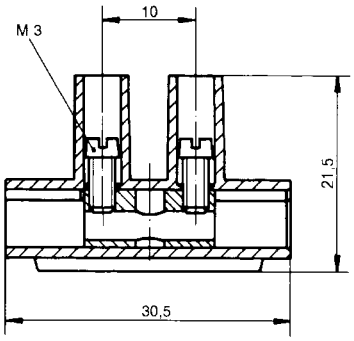

Ordering Information

NO. OF POS.	CATALOG NUMBER TUNNEL CONNECTION	CATALOG NUMBER WIRE PROTECTOR	A	B
1	TSB500 SK01	TSB500 SK01MDS	6,6 (.26)	—
2	TSB500 SK02	TSB500 SK02MDS	16,6 (.65)	—
3	TSB500 SK03	TSB500 SK03MDS	26,6 (1.05)	10 (.39)
4	TSB500 SK04	TSB500 SK04MDS	36,6 (1.44)	20 (.79)
5	TSB500 SK05	TSB500 SK05MDS	46,6 (1.83)	30 (1.18)
6	TSB500 SK06	TSB500 SK06MDS	56,6 (2.23)	40 (1.57)
7	TSB500 SK07	TSB500 SK07MDS	66,6 (2.62)	50 (1.97)
8	TSB500 SK08	TSB500 SK08MDS	76,6 (3.02)	60 (2.36)
9	TSB500 SK09	TSB500 SK09MDS	86,6 (3.41)	70 (2.76)
10	TSB500 SK10	TSB500 SK10MDS	96,6 (3.80)	80 (3.15)
11	TSB500 SK11	TSB500 SK11MDS	106,6 (4.20)	90 (3.54)
12	TSB500 SK12	TSB500 SK12MDS	116,6 (4.59)	100 (3.94)

Note: Add suffix HT for High Temperature version. Minimum order quantities may apply. Flammabilty: UL94V-0. Continuous working temperature: 150°

LR28387 E63810

For complete product information, order Catalog 1308389

Products for Industrial & Commercial Applications

Dimensions are shown for reference purposes only.

Dimensions are in inches and millimeters unless otherwise specified. Values in brackets are metric equivalents.

Specifications subject to change.

Technical Support Center
1-800-522-6752
www.tycoelectronics.com

10mm Pitch, Fused Terminal Blocks—Series 503Si

DESCRIPTION

Series 503Si & 503Si...DS version of TSB500 Series with an integrated fuse holder for 5 x 20mm fuses. Protection against unintentional touch of live parts to VBG4 and VDE 0106, part 100 and VDE 0470, part 1.
Series 503Si...E & 503Si...EDS include a ground connection.



PHYSICAL PROPERTIES

Housing:

HOUSING MATERIAL: Polyamide 6/6
COLOR: Gray, handle is black

Terminal:

TUBULAR CONTACT: Brass, tin plated
SCREW: Steel
SCREW PLATING: Zinc with chromate
WIRE PROTECTOR: Stainless steel
CONTACTS FOR FUSES: Stainless steel spring
TUNNEL CONNECTION: Without wire protector

Mechanical:

PITCH (TERMINAL SPACING): 10mm (.393")
WIRE STRIP LENGTH: 7mm (.276")

ELECTRICAL PROPERTIES

MAXIMUM CURRENT:
- To VDE 820: Fuse Holder 10A
- To VDE 0100: Terminal Blocks 26A
- To VDE 0700/0711: Terminal Blocks 10A

OPERATING VOLTAGE:
- Fuse Holder: 250V
- Terminal Blocks: 400V

WIRE RANGE:
- Wire Protector: 12-22 AWG
- Tunnel Connection: 12-22 AWG

ENVIRONMENTAL PROPERTIES

CONTINUOUS WORKING TEMPERATURE: 100°C

Note: Before ordering, see Cross Reference in Section 15 for equivalent Tyco Electronics Part Number.

500Si/1 (1 Circuit) **503Si (2-5 Circuits)**

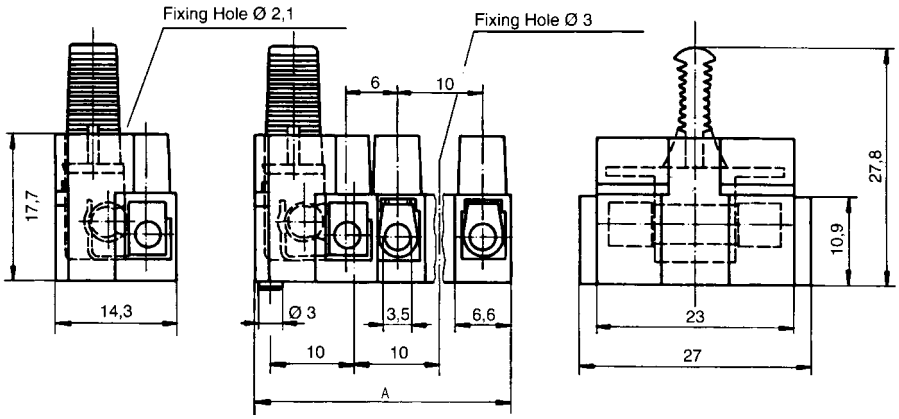

Ordering Information

NO. OF POS.	CATALOG # TUNNEL CONNECTION	CATALOG # WIRE PROTECTOR	CATALOG # TUNNEL CONNECTION GROUNDED	CATALOG # WIRE PROTECTOR GROUNDED	A
1	503Si 1	503Si 1DS	—	—	14,3
2	503Si 2	503Si 2DS	—	—	20
3	503Si 3	503Si 3DS	503Si 3E	503Si 3EDS	30
4	503Si 4	503Si 4DS	503Si 4E	503Si 4EDS	40
5	503Si 5	503Si 5DS	503Si 5E	503Si 5EDS	50

For complete product information, order Catalog 1308389

Products for Industrial & Commercial Applications

Dimensions are shown for reference purposes only.

Dimensions are in inches and millimeters unless otherwise specified. Values in brackets are metric equivalents.

Specifications subject to change.

Technical Support Center
1-800-522-6752
www.tycoelectronics.com

12mm Pitch, 40A with Wire Protector—Series TSB1000

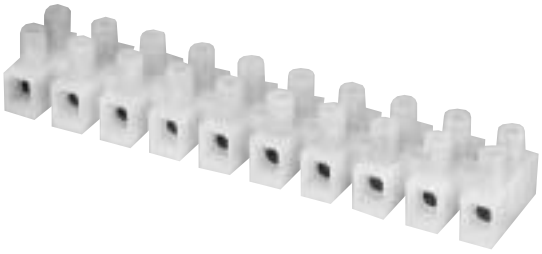

Physical Properties

Housing:

Housing Material: Polyamide 6
Flammability: UL94V-2
Color: Natural (off white)

Terminal:

Tubular Contact: Brass, tin plated
Screw: Steel, M3.5
Screw Plating: Zinc with chromate
Wire Protector: Stainless steel

Mechanical:

Pitch (terminal spacing): 12mm (.472")
Wire Strip Length: 7mm (.28")
Min. Wire Pull-Out Force: 125 lbs.
Recommended Tightening Torque: 10 in.- lbs.
Recommended Screwdrivers: Stanley 1016, Sears Craftsman 41429, Xcelite R184

Electrical Properties

Maximum Current: 40A
Operating Voltage: 250V
Wire Range: 10-22 AWG
Dielectric Withstand: 4500V

Environmental Properties

Continuous Working Temperature: 100°C

Note: Before ordering, see Cross Reference in Section 15 for equivalent Tyco Electronics Part Number.

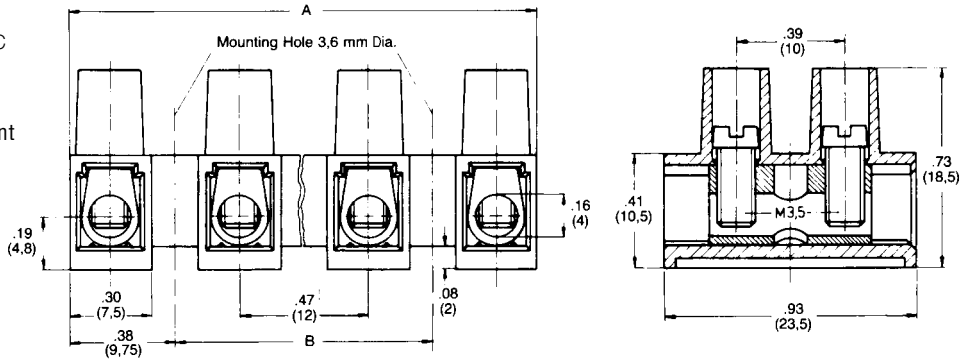

Ordering Information

NO. OF POS.	CATALOG NUMBER WIRE PROTECTOR	A	B
1	TSB1000 01DS	7,5 (.30)	—
2	TSB1000 02DS	19,5 (.77)	—
3	TSB1000 03DS	31,5 (1.24)	12 (.47)
4	TSB1000 04DS	43,5 (1.71)	24 (.95)
5	TSB1000 05DS	55,5 (2.19)	36 (1.42)
6	TSB1000 06DS	67,5 (2.66)	48 (1.89)
7	TSB1000 07DS	79,5 (3.13)	60 (2.36)
8	TSB1000 08DS	91,5 (3.60)	72 (2.84)
9	TSB1000 09DS	103,5 (4.07)	84 (3.31)
10	TSB1000 10DS	115,5 (4.55)	96 (3.78)
11	TSB1000 11DS	127,5 (5.02)	108 (4.25)
12	TSB1000 12DS	139,5 (5.49)	120 (4.72)

LR28387 E63810

For complete product information, order Catalog 1308389

Products for Industrial & Commercial Applications

Dimensions are shown for reference purposes only.

Dimensions are in inches and millimeters unless otherwise specified. Values in brackets are metric equivalents.

Specifications subject to change.

Technical Support Center
1-800-522-6752
www.tycoelectronics.com

12mm Pitch, 40A High Temperature—Series TSB1000...HT

Physical Properties

Housing:

Housing Material: Polyamide 6/6
Flammability: UL94V-0
Housing Color: **Brown**

Terminal:

Tubular Contact: Brass, tin plated
Screw: Steel, M3.5
Screw Plating: Zinc with chromate
Wire Protector: Stainless steel

Mechanical:

Pitch (terminal spacing): 12mm (.472")
Wire Strip Length: 7mm (.28")
Min. Wire Pull-Out Force: 125 lbs.
Recommended Tightening Torque: 10 in.- lbs.
Recommended Screwdrivers: Stanley 1016, Sears Craftsman 41429, Xcelite R184

Electrical Properties

Maximum Current: 40A
Operating Voltage: 250V
Wire Range: 10-24 AWG
Dielectric Withstand: 4500V

Environmental Properties

Continuous Working Temperature: 150°C

Note: Before ordering, see Cross Reference in Section 15 for equivalent Tyco Electronics Part Number.

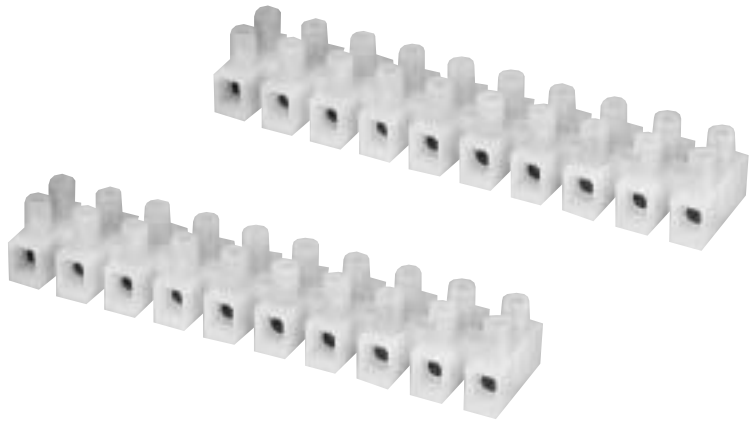

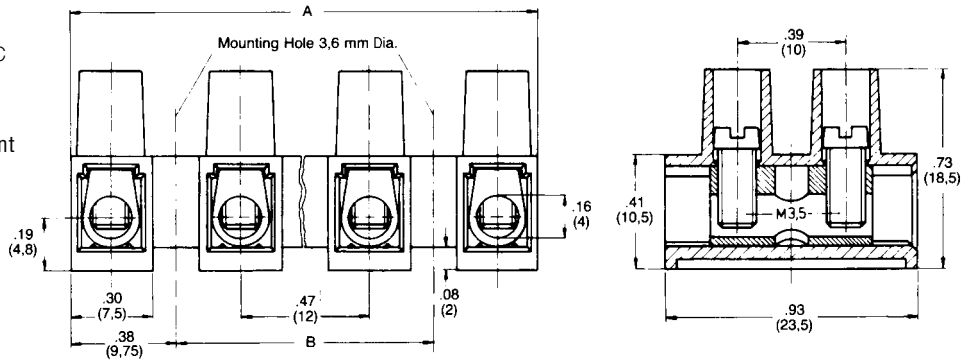

Ordering Information

NO. OF POS.	CATALOG NUMBER WIRE PROTECTOR	A	B
1	TSB1000 01DS HT	7,5 (.30)	—
2	TSB1000 02DS HT	19,5 (.77)	—
3	TSB1000 03DS HT	31,5 (1.24)	12 (.47)
4	TSB1000 04DS HT	43,5 (1.71)	24 (.95)
5	TSB1000 05DS HT	55,5 (2.19)	36 (1.42)
6	TSB1000 06DS HT	67,5 (2.66)	48 (1.89)
7	TSB1000 07DS HT	79,5 (3.13)	60 (2.36)
8	TSB1000 08DS HT	91,5 (3.60)	72 (2.84)
9	TSB1000 09DS HT	103,5 (4.07)	84 (3.31)
10	TSB1000 10DS HT	115,5 (4.55)	96 (3.78)
11	TSB1000 11DS HT	127,5 (5.02)	108 (4.25)
12	TSB1000 12DS HT	139,5 (5.49)	120 (4.72)

LR28387 E63810

For complete product information, order Catalog 1308389

Products for Industrial & Commercial Applications

Dimensions are shown for reference purposes only.

Dimensions are in inches and millimeters unless otherwise specified. Values in brackets are metric equivalents.

Specifications subject to change.

Technical Support Center
1-800-522-6752
www.tycoelectronics.com

12mm Pitch, 40A High Voltage Version—Series TSB1000...US

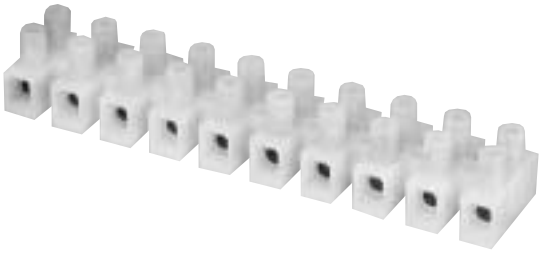

Physical Properties

Housing:

Housing Material: Polyamide 6
Flammability: UL94V-2
Color: Natural (off white)

Terminal:

Tubular Contact: Brass, tin plated
Screw: Steel, M3.5
Screw Plating: Zinc with chromate
Wire Protector: Stainless steel

Mechanical:

Pitch (terminal spacing): 12mm (.472")
Wire Strip Length: 7mm (.28")
Min. Wire Pull-Out Force: 125 lbs.
Recommended Tightening Torque: 10 in.- lbs.
Recommended Screwdrivers: Stanley 1016, Sears Craftsman 41429, Xcelite R184

Electrical Properties

Maximum Current: 40A
Operating Voltage: 600V
Wire Range:
Wire Protector: 10-24 AWG
Tunnel Connection: 8-22 AWG
Dielectric Withstand: 4500V

Environmental Properties

Continuous Working Temperature: 100°C

Note: Before ordering, see Cross Reference in Section 15 for equivalent Tyco Electronics Part Number.

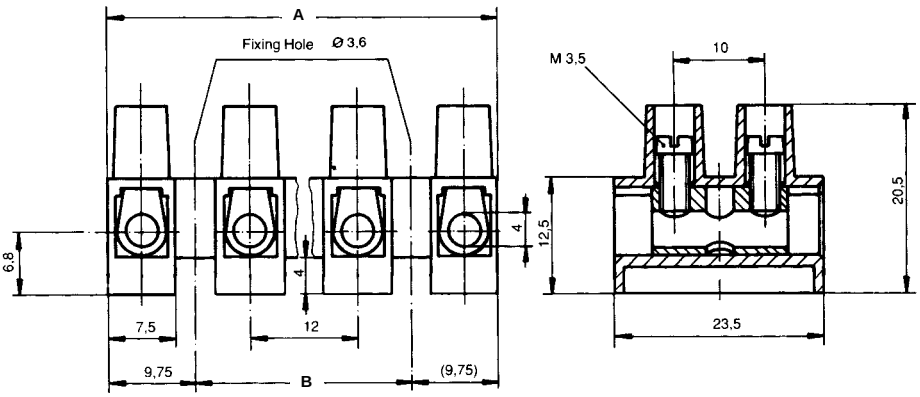

Ordering Information

NO. OF POS.	CATALOG NUMBER TUNNEL CONNECTION	CATALOG NUMBER WIRE PROTECTOR	A	B
1	TSB1000 01US	TSB1000 01DSUS	7,5 (.30)	—
2	TSB1000 02US	TSB1000 02DSUS	19,5 (.77)	—
3	TSB1000 03US	TSB1000 03DSUS	31,5 (1.24)	12 (.47)
4	TSB1000 04US	TSB1000 04DSUS	43,5 (1.71)	24 (.95)
5	TSB1000 05US	TSB1000 05DSUS	55,5 (2.19)	36 (1.42)
6	TSB1000 06US	TSB1000 06DSUS	67,5 (2.66)	48 (1.89)
7	TSB1000 07US	TSB1000 07DSUS	79,5 (3.13)	60 (2.36)
8	TSB1000 08US	TSB1000 08DSUS	91,5 (3.60)	72 (2.84)
9	TSB1000 09US	TSB1000 09DSUS	103,5 (4.07)	84 (3.31)
10	TSB1000 10US	TSB1000 10DSUS	115,5 (4.55)	96 (3.78)
11	TSB1000 11US	TSB1000 11DSUS	127,5 (5.02)	108 (4.25)
12	TSB1000 12US	TSB1000 12DSUS	139,5 (5.49)	120 (4.72)

LR28387 E63810

For complete product information, order Catalog 1308389

Products for Industrial & Commercial Applications

Dimensions are shown for reference purposes only.

Dimensions are in inches and millimeters unless otherwise specified. Values in brackets are metric equivalents.

Specifications subject to change.

Technical Support Center
1-800-522-6752
www.tycoelectronics.com

12mm Pitch, Fused Terminal Blocks—Series 1003Si

DESCRIPTION

Series 1003Si & 1003Si...DS version of TSB1000 Series with an integrated fuse holder for 1/4" x 1"(6.3 x 25mm) or 1/4" x 1 1/4" (6.3mm x 32mm). Protection against unintended touch of live parts to VBG4.
Series 1003Si...E & 1003Si...EDS include a ground connection.

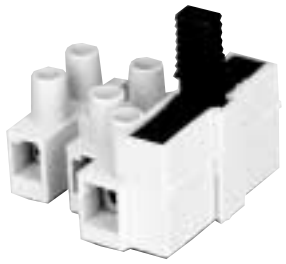

PHYSICAL PROPERTIES

Housing:

HOUSING MATERIAL: Polyamide 6/6
COLOR: Gray, handle is black

Terminal:

TUBULAR CONTACT: Brass, tin plated
SCREW: Steel
SCREW PLATING: Zinc with chromate
WIRE PROTECTOR: Stainless steel
CONTACTS FOR FUSES: Stainless steel screw
TUNNEL CONNECTION: Without wire protector

Mechanical:

PITCH (TERMINAL SPACING): 12mm (.472")
WIRE STRIP LENGTH: 7.5mm (.295")

ELECTRICAL PROPERTIES

MAXIMUM CURRENT:
To VDE 0820: Fuse Holder 16A
To VDE 0100: Terminal Blocks 34A
To VDE 0700/0711: Terminal Blocks 16A
OPERATING VOLTAGE:
Fuse Holder: 250V
Terminal Blocks: 400V
WIRE RANGE:
Wire Protector: up to 10mm² (10-24 AWG)
Tunnel Connection: up to 4mm² (8-22 AWG)

ENVIRONMENTAL PROPERTIES

CONTINUOUS WORKING TEMPERATURE: 100°C

Note: Before ordering, see Cross Reference in Section 15 for equivalent Tyco Electronics Part Number.

1003Si/1 (1 Circuit) **1003Si (2-5 Circuits)**

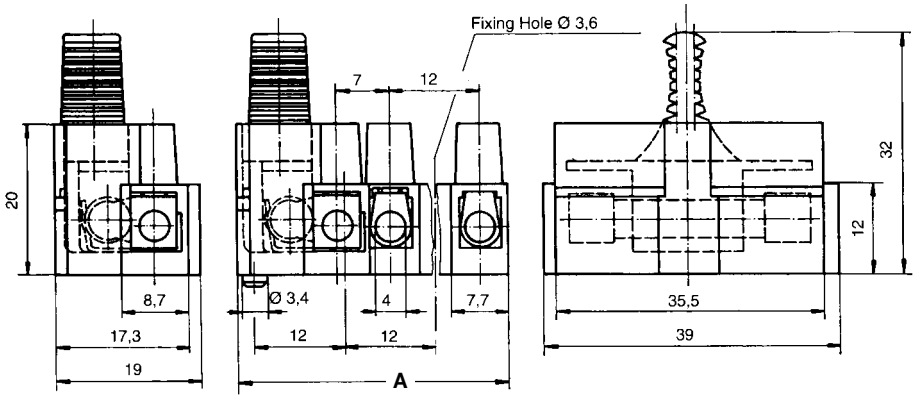

Ordering Information

NO. OF POS.	CATALOG # TUNNEL CONNECTION	CATALOG # WIRE PROTECTOR	CATALOG # TUNNEL CONNECTION GROUNDED	CATALOG # WIRE PROTECTOR GROUNDED	A
1	1003Si 1	1003Si 1DS	—	—	18,7 (.74)
2	1003Si 2	1003Si 2DS	—	—	24 (0.95)
3	1003Si 3	1003Si 3DS	1003Si 3E	1003Si 3EDS	36 (1.42)
4	1003Si 4	1003Si 4DS	1003Si 4E	1003Si 4EDS	48 (1.89)
5	1003Si 5	1003Si 5DS	1003Si 5E	1003Si 5EDS	60 (2.36)

For complete product information, order Catalog 1308389

Products for Industrial & Commercial Applications

Dimensions are shown for reference purposes only.

Dimensions are in inches and millimeters unless otherwise specified. Values in brackets are metric equivalents.

Specifications subject to change.

Technical Support Center
1-800-522-6752
www.tycoelectronics.com

Fuse Holder (For Series TSB500, TSB1000)—Series 500Si

DESCRIPTION

Series 500Si:
Two versions mate with TSB500 and TSB1000 to provide a fuse holder for 5 x 20mm or 5mm x 25mm fuses. These connectors comply with VDE 0820, part 2.

Series 500Si...K:
Same as the standard series but provides a raised, transparent "bayonet catch" which serves as a Fuse Link Carrier for fuses 5 x 25mm (with indicator).

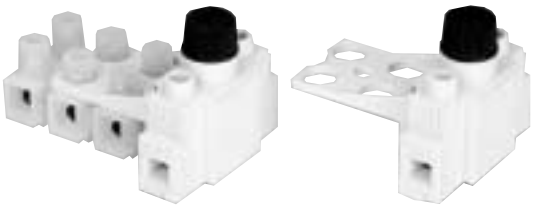

PHYSICAL PROPERTIES

Housing:

HOUSING MATERIAL: Polyamide 6/6
COLOR: Gray

Terminal:

TUBULAR CONTACT: Brass, tin plated
SCREW: Steel
SCREW PLATING: Zinc with chromate

Mechanical:

PITCH (TERMINAL SPACING): 10mm and 12mm
WIRE STRIP LENGTH: 6.5mm

ELECTRICAL PROPERTIES

MAXIMUM CURRENT:
To VDE 0820: 10A
To VDE 070010711: 10A
OPERATING VOLTAGE: 250V
WIRE RANGE: 12-22 AWG

ENVIRONMENTAL PROPERTIES

CONTINUOUS WORKING TEMPERATURE: 100°C

Note: Before ordering, see Cross Reference in Section 15 for equivalent Tyco Electronics Part Number.

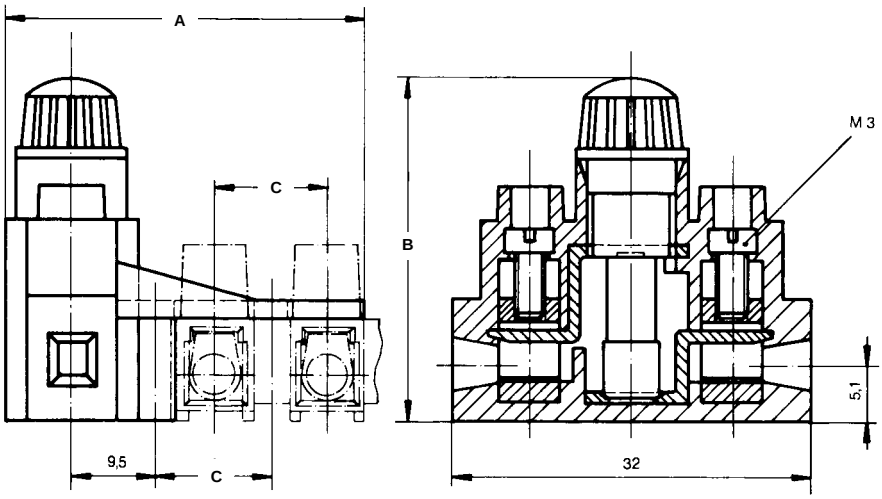

Ordering Information

DESCRIPTION	CATALOG NUMBER	A	B	C
For TSB500 Series	500Si 5	35	29	10
For TSB1000 Series	500Si 10	37	30	12
w/ Fuse Link Carrier for TSB500 Series	500Si 5K	35	34	10
w/ Fuse Link Carrier for TSB1000 Series	500Si 10K	37	35	12

For complete product information, order Catalog 1308389

Products for Industrial & Commercial Applications

Dimensions are shown for reference purposes only.

Dimensions are in inches and millimeters unless otherwise specified. Values in brackets are metric equivalents.

Specifications subject to change.

Technical Support Center
1-800-522-6752
www.tycoelectronics.com

100 Series High Density Miniature Blocks

DESCRIPTION/APPLICATION

These miniature terminal blocks fit on a much smaller channel to save valuable panel space or can be surface mounted directly to the panel. Miniature blocks accept wire as large as #12 AWG and are available in four styles: Miniature (nylon), Miniature (polypropylene), Single Tier and Double Tier.

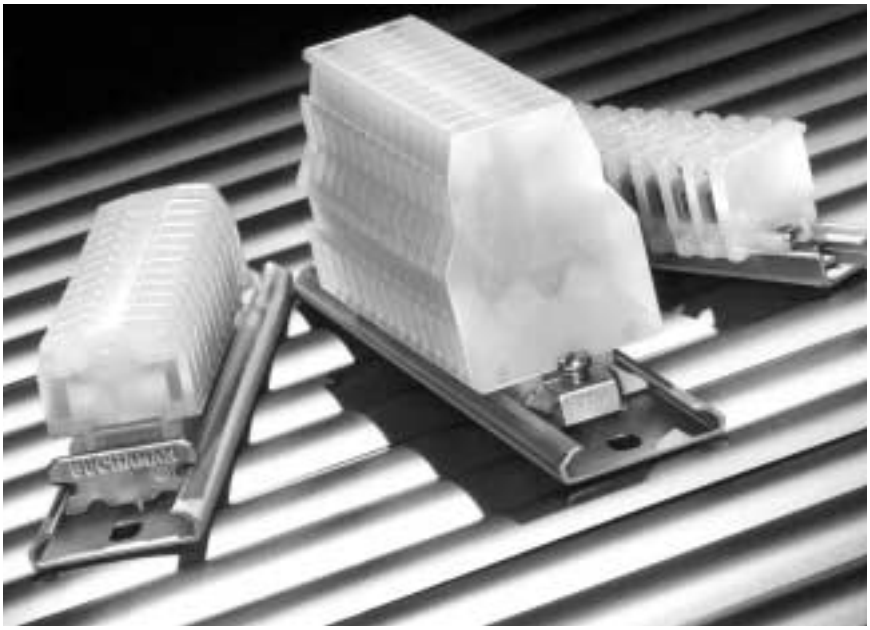

DESIGN ADVANTAGES

- No Wire Crimping Required — tubular clamp contacts hold wire ranging from #30 to #12 AWG better than crimp-on terminals.
- Saves Installation Time and Costs — tubular clamp contacts are supplied with captive screws backed out.
- Nylon housing standard; polypropylene for fire retardant characteristics.
- Positive Stop — helps prevent wire from being inserted too far, and helps prevent screw from being tightened on insulation. Easy access contact provides for safe, reliable, and cost-effective connection.
- Quick Installation and Change — additional sections may be added or removed without removing channel mounting screw.
- Choice of Five Mounting Channels:
  - Miniature aluminum
  - Zinc-plated steel
  - Pre-punched aluminum
  - Break-away steel
  - Elevated aluminum.
- Single and Double Tier blocks fit all standard BUCHANAN mounting channels. Single Tier blocks fit both miniature and standard channels.
- Choice of Marking Surfaces — matte-finish area for marking directly on block; slide-in vinyl strip (blank or preprinted) also available.

For complete product information, order Catalog 1308389

LR25557 E63810

Products for Industrial & Commercial Applications

Dimensions are shown for reference purposes only.

Dimensions are in inches and millimeters unless otherwise specified. Values in brackets are metric equivalents.

Specifications subject to change.

Technical Support Center
1-800-522-6752
www.tycoelectronics.com

100 Series High Density Miniature Blocks






CHARACTERISTICS	MINIATURE NYLON	MINIATURE POLYPROPYLENE	SINGLE TIER	DOUBLE TIER
Type of Block	**Model**	**Model**	**Model**	**Model**
Standard Block	125-BU	P125	115-BU	105-BU
Corrosion Resistant (nickel plated contacts)	D125	DP125	D115	D105
Specifications				
Housing Material	Nylon	Polypropylene	Nylon	Nylon
Max. Service Temperature	125˚C (257˚F)	105˚C (221˚F)	125˚C (257˚F)	125˚C (257˚F)
Flammability	UL94V-2	UL94V-0	UL94V-2	UL94V-2
Wire Strip Length (in.)	$^{5}/_{16}$	$^{5}/_{16}$	$^{5}/_{16}$	$^{5}/_{16}$
Torque, in-lbs.	6-9	6-9	6-9	6-9
Electrical Characteristics				
UL Rating	28 A @ 300V	28 A @ 300V	20 A @ 600V	20 A @ 600V
Wire Range (solid & stranded)	30-12	30-12	30-12	30-12
Spacing				
Pitch	0.25"	0.25"	0.25"	0.24"
Terminals per Foot	48	48	48	102
Accessories				
End Section (gray)	130-BU	P130	120	110-BU
Jumper, 2 pole	10	10	10	—
Jumper, 10 pole	—	—	—	J10
Jumper, Inter-tier	—	—	—	J2-BU
Mounting Channel				
Miniature	12	12	12	—
Steel, Zinc plated (6ft)	—	—	60	60
Steel, Zinc plated (3ft)	—	—	63-BU	63-BU
Breakaway, steel	—	—	60B36	60B36
Pre-punched aluminum (6ft)	—	—	64	64
Pre-punched aluminum (3ft)	—	—	67	67
Channel Clamps				
Miniature (use w/#12 channel)	11	11	11	—
Universal	—	—	68	68

Note: Before ordering, see Cross Reference in Section 15 for equivalent Tyco Electronics Part Number.

For complete product information, order Catalog 1308389

LR25557 E63810

Products for Industrial & Commercial Applications

Dimensions are shown for reference purposes only.

Dimensions are in inches and millimeters unless otherwise specified. Values in brackets are metric equivalents.

Specifications subject to change.

Technical Support Center
1-800-522-6752
www.tycoelectronics.com

100 Series Miniature Block Accessories

CHANNEL CLAMPS

MARKING ACCESSORIES



SCREW STEEL CHANNEL	UNIVERSAL	SNAP-IN	MINIATURE FOR #12 CHANNEL	SEE-THRU COVER	GANGING ROD	MINIATURE VINYL MARKING STRIPS	ELEVATED MARKING STRIP	NYLON HOLDING PLUG
Catalog Number								
61	68	62	11	13	14	15	52-BU	16
Available For								
Single Tier Double Tier	Single Tier Double Tier	Single Tier Double Tier	Miniature Single Tier	Miniature Single Tier	Miniature Single Tier	Miniature Single Tier Double Tier	Miniature Single Tier Double Tier	Miniature Single Tier
Standard Package								
100	100	100	100	50	2 feet	25 feet	18 inches	100

Factory Assembled Blocks

DESCRIPTION	DIRECT MOUNT	CHANNEL MOUNT
Miniature (nylon)	125XX	0125XX
	D125XX (nickel)	D0125XX (nickel)
Single Tier (nylon)	115XX	0115XX
	D115XX (nickel)	D0115XX (nickel)
Double Tier (nylon)	105XX	0105XX
	D105XX (nickel)	D0105XX (nickel)
Miniature (polypropylene)	P125XX	P0125XX
	DP125XX (nickel)	DP0125XX (nickel)

NOTE: XX = number of blocks desired. For factory assembled blocks with removable marking strip, add "-1" to Catalog Number. Minimum order quantities may apply.

Note: Before ordering, see Cross Reference in Section 15 for equivalent Tyco Electronics Part Number.

RELATED PRODUCT DATA
For more information on AMP Standard Terminals and Splices or Quick-Connect FASTON Receptacles and Tabs, request Catalog 82042.

LR25557 E63810

For complete product information, order Catalog 1308389

Products for Industrial & Commercial Applications

Dimensions are shown for reference purposes only.

Dimensions are in inches and millimeters unless otherwise specified. Values in brackets are metric equivalents.

Specifications subject to change.

Technical Support Center
1-800-522-6752
www.tycoelectronics.com

Miniature Blocks

MINIATURE

C = .29 + (.25 X N)
L = .51 + (.25 X N)

On Miniature Channel:

C_{CH} = 1.00 + (.25 X A)
L_{CH} = 1.35 + (.25 X A)
A = N when N is even
A = N + 1 when N is Odd
N = No. of Miniature Sections

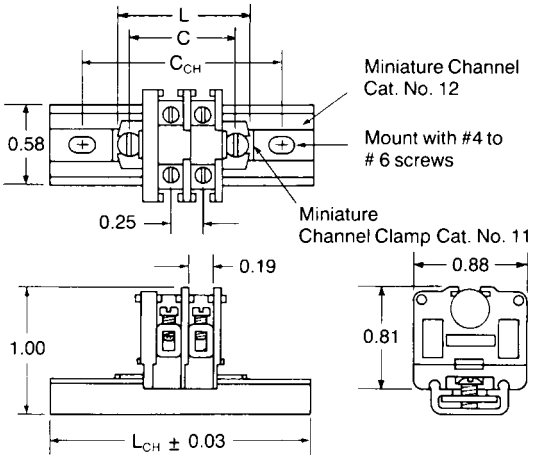

SINGLE TIER

C = .35 + (.25 X N)
L = .50 + (.25 X N)

On Miniature Channel:

C_{CH} = 2.00 + (.25 X A)
L_{CH} = 2.75 + (.25 X A)
N = No. of Single Tier Sections

C_{CH} = 1.00 + (.25 X A)
L_{CH} = 1.35 + (.25 X A)
A = N when N is even
A = N + 1 when N is Odd
N = No. of Miniature Sections

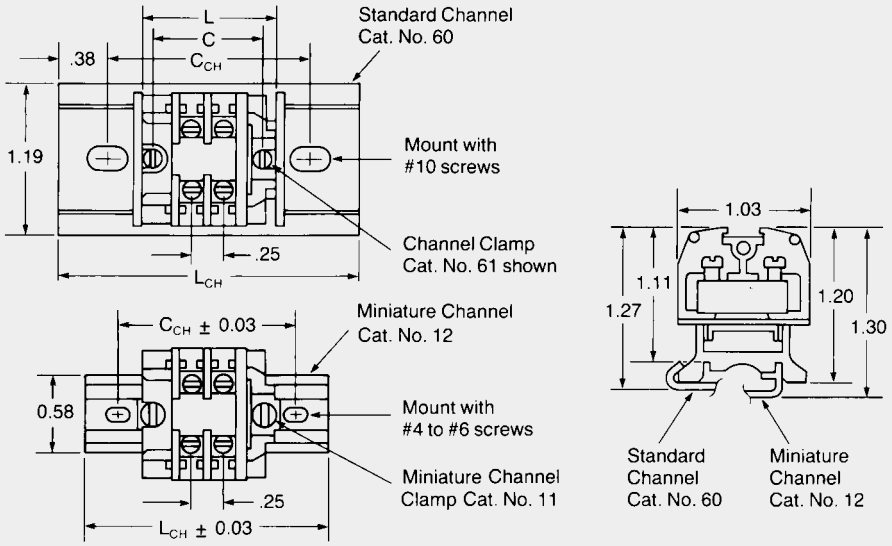

DOUBLE TIER

L = .08 + (.24 X N)

On Miniature Channel:

CCH = 1.58 + (.24 X A)
LCH = 2.33 + (.24 X A)
N = No. of Double Tier Sections

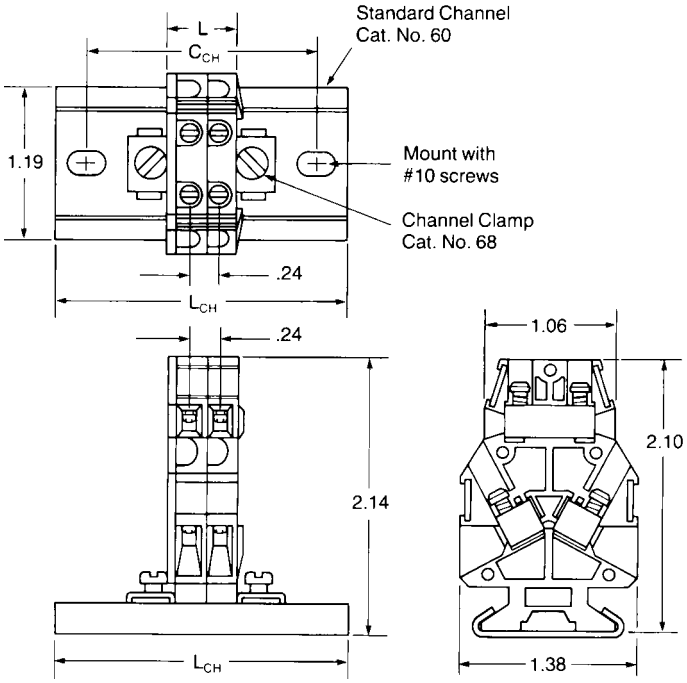

Products for Industrial & Commercial Applications

Dimensions are shown for reference purposes only.

Dimensions are in inches and millimeters unless otherwise specified. Values in brackets are metric equivalents.

Specifications subject to change.

Technical Support Center
1-800-522-6752
www.tycoelectronics.com

600 & 700 Series, 300 & 600 Volt Medium Duty

DESCRIPTION/APPLICATION

This versatile series of Medium Duty blocks is available in two major categories: 300 Volt (600 Series), and 600 Volt (700 Series).

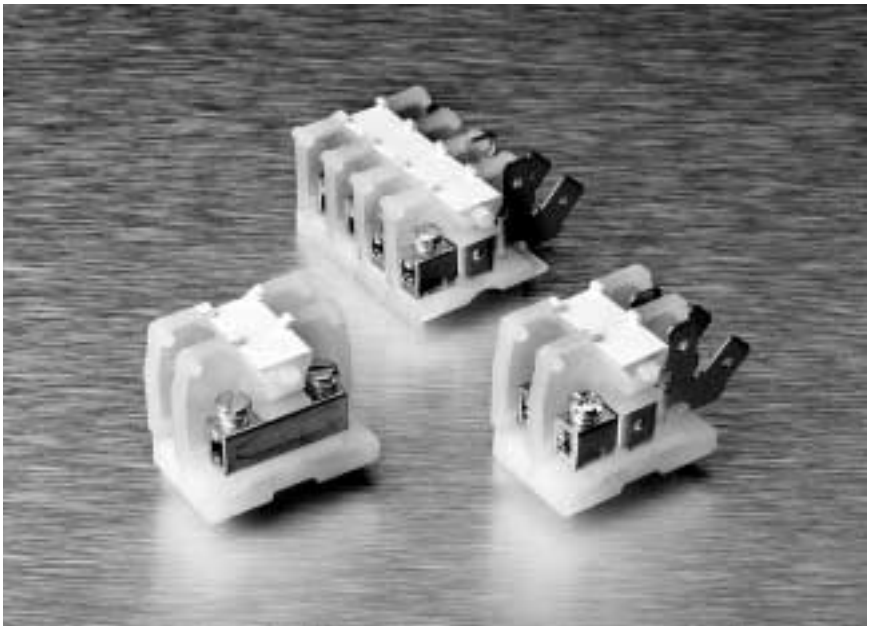

DESIGN ADVANTAGES

- High circuit density - 183 circuits per 6-foot length, 3/8 inch pitch.
- Select either 300 or 600 volt UL and NEMA rated models.
- Rated up to 50 amperes per circuit.
- Flat base models mount directly to surfaces or on miniature channel. Dovetail base mounts on standard size channel.
- Packaged for rapid handling and assembly - 100 per carton.
- Only one end section needed per block assembly.
- Fanning strips - interlocking sectional fanning strips allow entire circuit groups to be connected and disconnected as a single unit.
- Choice of six contact styles - tubular clamp, tubular screw, strap screw, strap clamp, quick connect and tubular screw quick connect.
- Readily identify circuits - mark directly on block sections or use removable marking strip. Preprinted marking strips also available.
- Factory assembled blocks available.
- Nylon housing is standard, polypropylene is available for fire retardant characteristics.
- Sections snap-fit with phenolic Medium Duty, Heavy Duty, Intermediate Heavy Duty, and Fuse & Switch blocks.

LR25557 E63810

For complete product information, order Catalog 1308389

Products for Industrial & Commercial Applications

Dimensions are shown for reference purposes only.

Dimensions are in inches and millimeters unless otherwise specified. Values in brackets are metric equivalents.

Specifications subject to change.

Technical Support Center
1-800-522-6752
www.tycoelectronics.com

600 Series, 300V Medium Duty, 0.375" Pitch



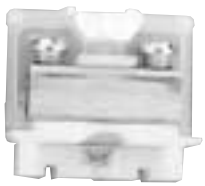


CHARACTERISTICS	STRAP SCREW	STRAP CLAMP	TUBULAR SCREW	TUBULAR CLAMP
Type of Block	**Model**	**Model**	**Model**	**Model**
Direct Mount (Flat Base) Painted, Nylon	621	628	624	625
Unpainted, Nylon	611-BU	618-BU	614-BU	615-BU
Polypropylene	P621	P628	P624	P625
Channel Mount (Dovetail Base) Painted, Nylon	0621	0628	0624	0625
Unpainted, Nylon	0611	0618	0614	0615
Polypropylene	P0621	P0628	P0624	P0625
Contact Type				
				
Specifications				
Wire Range (AWG) Solid & Stranded	22-10	30-14	18-8	22-10
Wire Strip Length (in.)	—	$^{11}/_{32}$	$^{11}/_{32}$	$^{11}/_{32}$
Screw Type	6-32 slotted binding head	6-32 slotted binding head	10-32 slotted pan head	10-32 slotted pan head
Ampacity	35 A	20 A	50 A	30 A
End Sections				
Direct Mount, Nylon	630-BU	630-BU	630-BU	630-BU
Direct Mount, Polypropylene	P630	P630	P630	P630
Channel Mount, Nylon	0630	0630	0630	0630
Channel Mount, Polypropylene	P0630	P0630	P0630	P0630

Note: Before ordering, see Cross Reference in Section 15 for equivalent Tyco Electronics Part Number.

Comparison (Type of Block)



Direct Mount (Flat Base)



Channel Mount (Dovetail Base)

LR25557 E63810

For complete product information, order Catalog 1308389

Products for Industrial & Commercial Applications

Dimensions are shown for reference purposes only.

Dimensions are in inches and millimeters unless otherwise specified. Values in brackets are metric equivalents.

Specifications subject to change.

Technical Support Center
1-800-522-6752
www.tycoelectronics.com

600 Series, 300V Medium Duty, 0.375" Pitch (Continued)


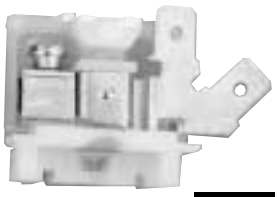

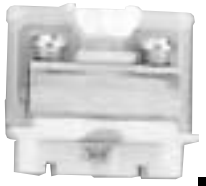
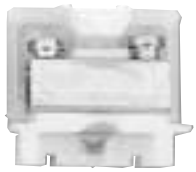

QUICK CONNECT	TUBULAR SCREW & QUICK CONNECT	CORROSION RESISTANT STRAP SCREW	CORROSION RESISTANT TUBULAR SCREW	CORROSION RESISTANT TUBULAR CLAMP
Model	**Model**	**Model**	**Model**	**Model**
627	629	D621	D624	D625
617	619	D611	D614	D615
P627	P629	DP621	DP624	DP625
0627	0629	D0621	D0624	D0625
0617	0619	D0611	D0614	D0615
P0627	P0629	DP0621	DP0624	DP0625
Contact Type				
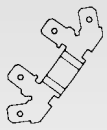	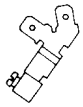			
22-12	18-8 & 22-12	22-10	18-8	22-10
—	—	—	$^{11}/_{32}$	$^{11}/_{32}$
#12 and smaller	#12 and smaller	6-32 Nickel plated Slotted Pan Head	10-32 Nickel plated Slotted Pan Head	10-32 Nickel plated Slotted Pan Head
20 A	20 A	35 A	50 A	30 A
630-BU	630-BU	630-BU	630-BU	630-BU
P630	P630	P630	P630	P630
0630	0630	0630	0630	0630
P0630	P0630	P0630	P0630	P0630

Note: Before ordering, see Cross Reference in Section 15 for equivalent Tyco Electronics Part Number.

LR25557 E63810

For complete product information, order Catalog 1308389

Products for Industrial & Commercial Applications

Dimensions are shown for reference purposes only.

Dimensions are in inches and millimeters unless otherwise specified. Values in brackets are metric equivalents.

Specifications subject to change.

Technical Support Center
1-800-522-6752
www.tycoelectronics.com

700 Series, 600V Medium Duty, 0.375" Pitch






CHARACTERISTICS	STRAP SCREW	STRAP CLAMP	TUBULAR SCREW	TUBULAR SCREW PHIL SLOT
Type of Block	**Model**	**Model**	**Model**	**Model**
Direct Mount (Flat Base) Painted, Nylon	721	728	724	724PS
Unpainted, Nylon	711-BU	718	714	714PS
Polypropylene	P721	P728	P724	—
Channel Mount (Dovetail Base) Painted, Nylon	0721	0728	0724	0724PS
Unpainted, Nylon	0711	0718	0714	0714PS
Polypropylene	P0721	P0728	P0724	—
Contact Type				
				
Specifications				
Wire Range (AWG) Solid & Stranded	22-10	30-14	18-8	18-8
Wire Strip Length (in.)	—	$^{11}/_{32}$	$^{11}/_{32}$	$^{11}/_{32}$
Screw Type	6-32 Slotted Binding Head	6-32 Slotted Binding Head	10-32 Slotted Pan Head	10-32 Phil Slot
Ampacity	35 A	20 A	50 A	50 A
End Sections				
Direct Mount, Nylon	730	730	730	730
Direct Mount, Polypropylene	P730	P730	P730	P730
Channel Mount, Nylon	0730	0730	0730	0730
Channel Mount, Polypropylene	P0730	P0730	P0730	P0730

Notes: 1. Standard package is 100 pieces for contact, 25 pieces for end section.
2. Before ordering, see Cross Reference in Section 15 for equivalent Tyco Electronics Part Number.

Comparison (Type of Block)


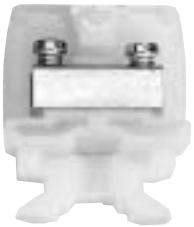

Direct Mount (Flat Base)

Channel Mount (Dovetail Base)

For complete product information, order Catalog 1308389

LR25557 E63810

Products for Industrial & Commercial Applications

Dimensions are shown for reference purposes only.

Dimensions are in inches and millimeters unless otherwise specified. Values in brackets are metric equivalents.

Specifications subject to change.

Technical Support Center
1-800-522-6752
www.tycoelectronics.com

700 Series, 600V Medium Duty, 0.375" Pitch (Continued)



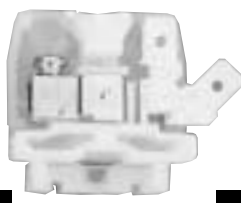

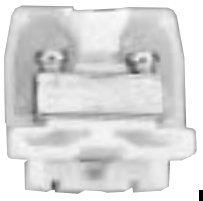
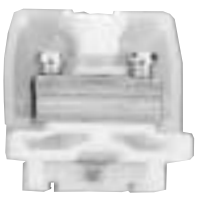

TUBULAR CLAMP	QUICK CONNECT	TUBULAR SCREW & QUICK CONNECT	CORROSION RESISTANT STRAP SCREW	CORROSION RESISTANT TUBULAR SCREW	CORROSION RESISTANT TUBULAR CLAMP
Model	**Model**	**Model**	**Model**	**Model**	**Model**
725	727	729	D721	D724	D725
715-BU	717	719	D711	D714	D715
P725	P727	P729	DP721	DP724	DP725
0725	0727	0729	D0721	D0724	D0725
0715	0717	0719	D0711	D0714	D0715
P0725	P0727	P0729	DP0721	DP0724	DP0725
	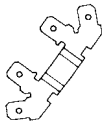	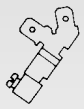			
22-10	22-12	18-8 & 22-12	22-10	18-8	22-10
$^{11}/_{32}$	—	—	—	$^{11}/_{32}$	$^{11}/_{32}$
10-32 Slotted Pan Head	#12 and smaller	#12 and smaller	6-32 Nickel plated Slotted Pan Head	10-32 Nickel plated Slotted Pan Head	10-32 Nickel plated Slotted Pan Head
30 A	20 A	20 A	35 A	50 A	30 A
730	730	730	730	730	730
P730	P730	P730	P730	P730	P730
0730	0730	0730	0730	0730	0730
P0730	P0730	P0730	P0730	P0730	P0730

Note: Before ordering, see Cross Reference in Section 15 for equivalent Tyco Electronics Part Number.

LR25557 E63810

For complete product information, order Catalog 1308389

Products for Industrial & Commercial Applications

Dimensions are shown for reference purposes only.

Dimensions are in inches and millimeters unless otherwise specified. Values in brackets are metric equivalents.

Specifications subject to change.

Technical Support Center
1-800-522-6752
www.tycoelectronics.com

600 and 700 Series, Medium Duty Accessories

MOUNTING CHANNEL

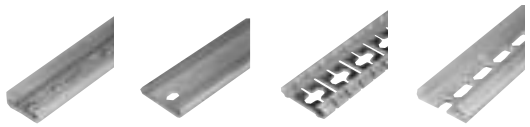

MINIATURE	STEEL CHANNEL	BREAK AWAY STEEL	PRE-PUNCHED ALUMINUM CHANNEL
Catalog Number			
12	60 63-BU	60-B-36	64 67
Standard Package			
3 feet	6 feet 3 feet	3 feet	6 feet 3 feet

CHANNEL CLAMPS

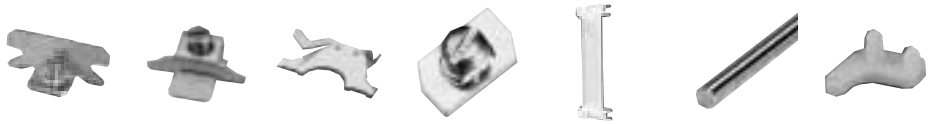

SCREW CHANNEL CLAMPS	UNIVERSAL CLAMPS	SNAP-IN CLAMPS	MINIATURE FOR #12 CHANNEL	SEE-THRU COVER	GANGING ROD	POLARIZING PLUG
Catalog Number						
61	68	62	11	71	30-BU	84
Standard Package						
100	100	100	100	50	2 feet	100

JUMPERS

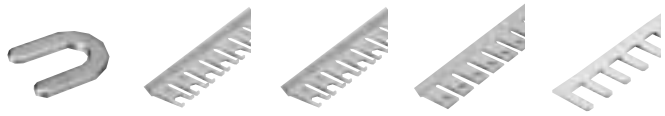

JUMPER FOR TUBULAR CONTACTS	SNAP-APART SPADE JUMPER*	SNAP-APART FLANGED JUMPER*	SNAP-APART RING TONGUE JUMPER*	SNAP-APART FOR TUBULAR CONTACTS
Catalog Number				
70	J6140	J6240	J6340	73
Standard Package				
100	40 ckt	40 ckt	40 ckt	20 ckt

* Fits 600 Series (300 volt) strap screw blocks only

Note: Before ordering, see Cross Reference in Section 15 for equivalent Tyco Electronics Part Number.

RELATED PRODUCT DATA
For more information on AMP Standard Terminals and Splices or Quick-Connect FASTON Receptacles and Tabs, request Catalog 82042.

For complete product information, order Catalog 1308389

Products for Industrial & Commercial Applications

Dimensions are shown for reference purposes only.

Dimensions are in inches and millimeters unless otherwise specified. Values in brackets are metric equivalents.

Specifications subject to change.

Technical Support Center
1-800-522-6752
www.tycoelectronics.com

600 and 700 Series, Medium Duty Accessories (Continued)

MARKING ACCESSORIES



PLASTIC CLOTH TAPE	PLASTIC CLOTH TAPE	VINYL MARKING STRIPS	ELEVATED MARKING STRIP	NYLON HOLDING PLUG
Catalog Number				
66	55-BU	50-BU	52-BU	65-BU
Standard Package				
1 sheet	50 feet	25 feet	18 inches	100

PLUG-IN BLOCKS



TUBULAR CLAMP W/BLADE #22-10 AWG	TUBULAR CLAMP W/CANTILEVER #22-10 AWG
Catalog Number	
BPO35M	BP35F
Standard Package	
100	12
End Section	
0730	0730
Standard Package	
25	25

NOTES:
For factory assembled blocks on standard steel channel suffix Catalog Number with number of blocks desired. (Maximum number of flatbase, preassembled sections is 12.)
Example: Twenty preassembled tubular screw nylon sections on channel = 062420

Example: Ten preassembled tubular screw polypropylene sections on channel = P62510

For unpainted factory assembled blocks supplied with a removable marking strip add — 1 to Catalog Number.

For blocks with two or more different contact sections, imprinted marking strips, or special features, consult the Technical Support Center.

Note: Before ordering, see Cross Reference in Section 15 for equivalent Tyco Electronics Part Number.

SECTIONAL FANNING STRIPS



Strap Screw



Tubular Screw

Ordering Information

CATALOG #	DESCRIPTION	STANDARD PACKAGE
74	Tubular Screw	50
78-TB	Strap Screw	50
74100	Molding Only, no contact	50

NOTES:
For factory assembled fanning strips, suffix Catalog Number with number desired.
Example: Ten factory assembled sections of #74 = 7410

600 Series, 300 Volt Channel Mount

DOVETAIL BASE MOUNTED ON STANDARD #60 CHANNEL

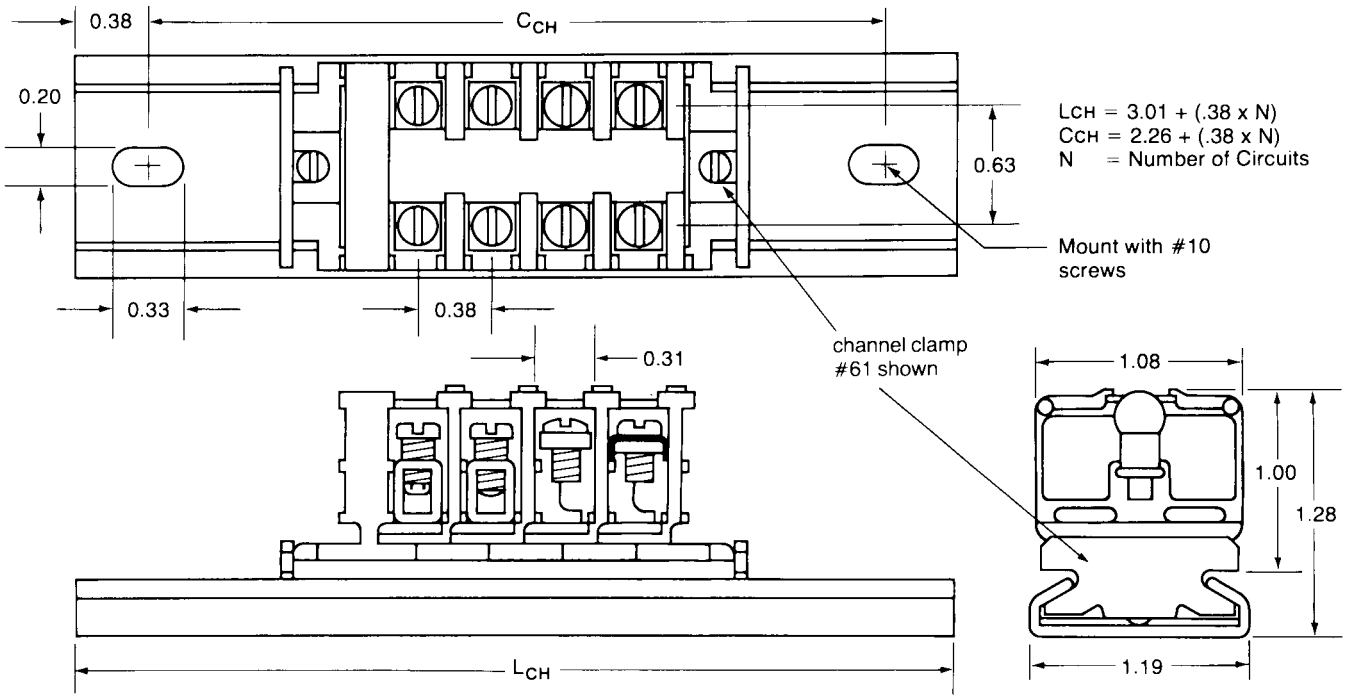

FLAT BASE MOUNTED ON STANDARD #12 CHANNEL

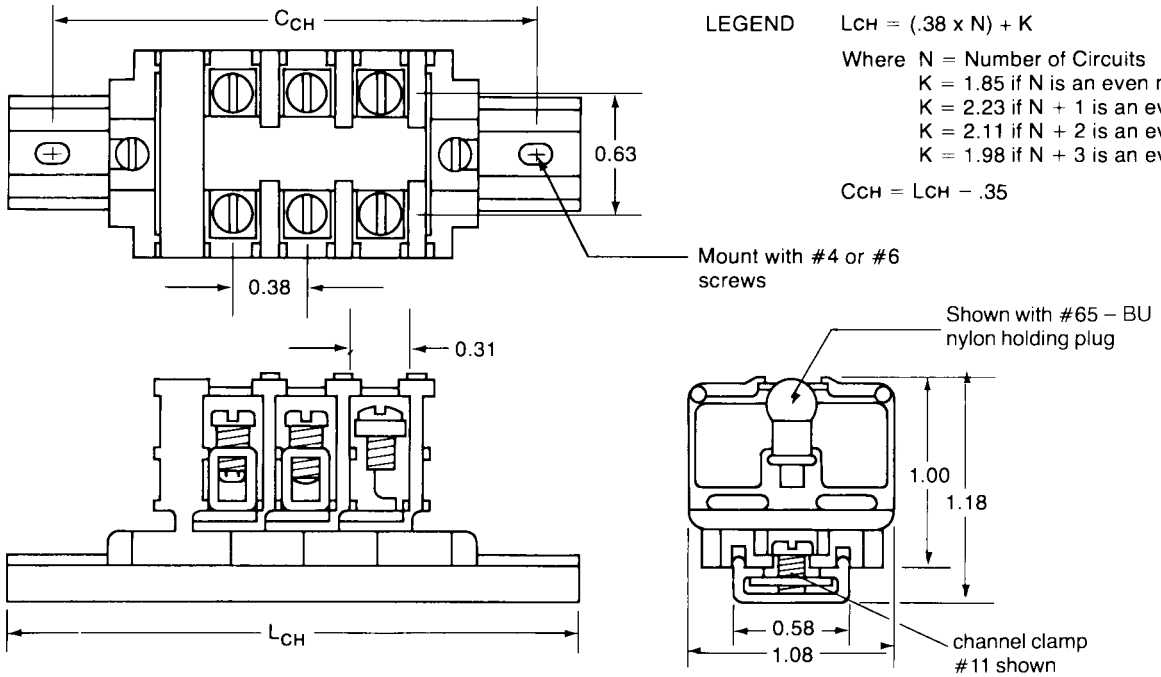

For complete product information, order Catalog 1308389

Products for Industrial & Commercial Applications

Dimensions are shown for reference purposes only.

Dimensions are in inches and millimeters unless otherwise specified. Values in brackets are metric equivalents.

Specifications subject to change.

Technical Support Center
1-800-522-6752
www.tycoelectronics.com

700 Series, 600 Volt Channel Mount

DOVETAIL BASE MOUNTED ON STANDARD #60 CHANNEL

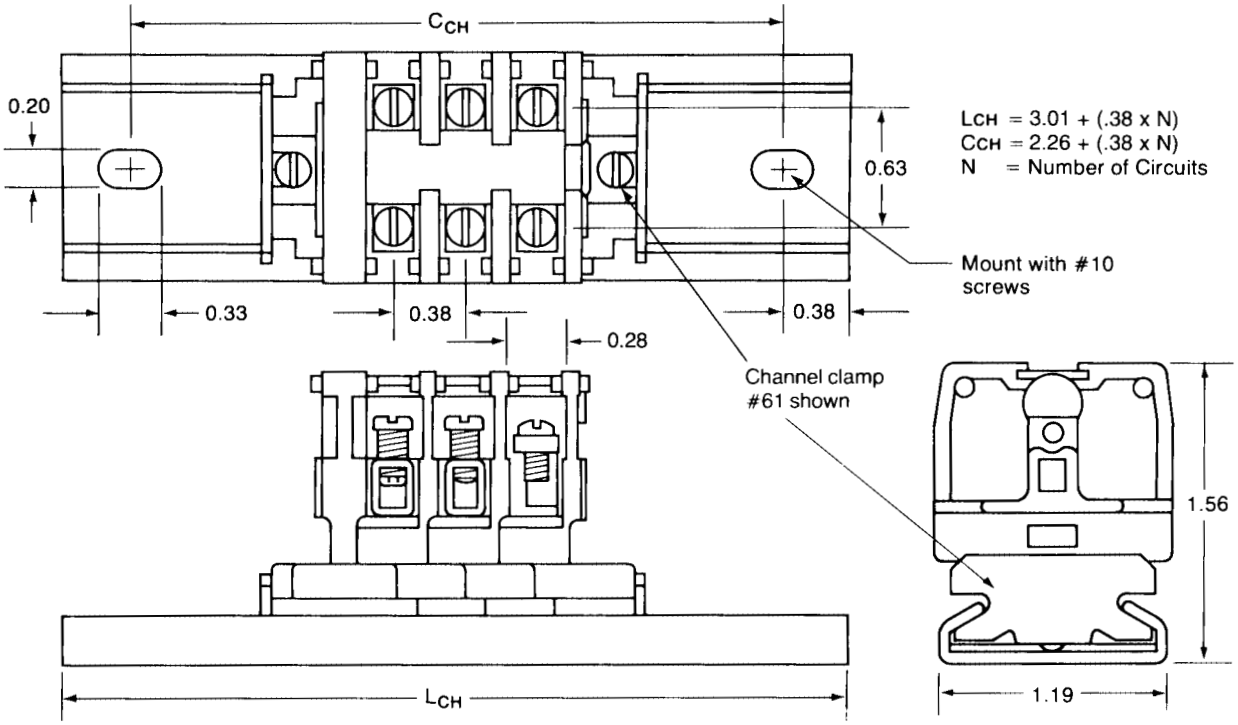

FLAT BASE MOUNTED ON MINIATURE #12 CHANNEL

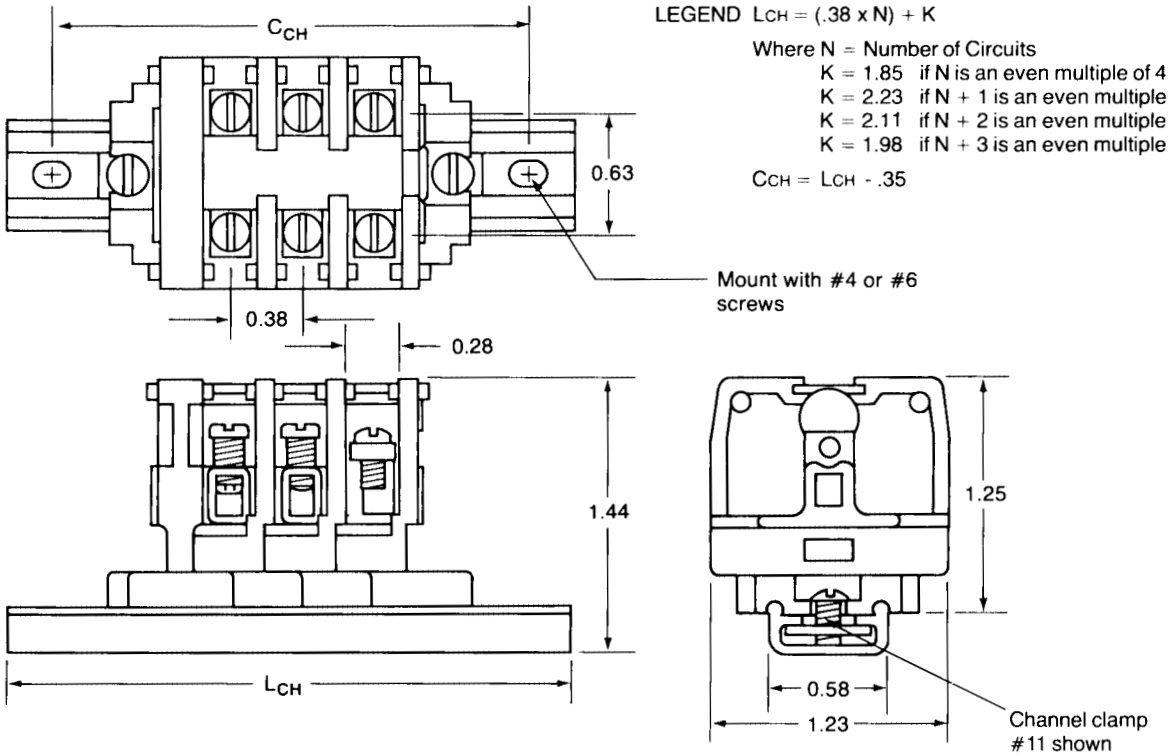

For complete product information, order Catalog 1308389

Products for Industrial & Commercial Applications

Dimensions are shown for reference purposes only.

Dimensions are in inches and millimeters unless otherwise specified. Values in brackets are metric equivalents.

Specifications subject to change.

Technical Support Center
1-800-522-6752
www.tycoelectronics.com

600 Series, 300 Volt Flat Base

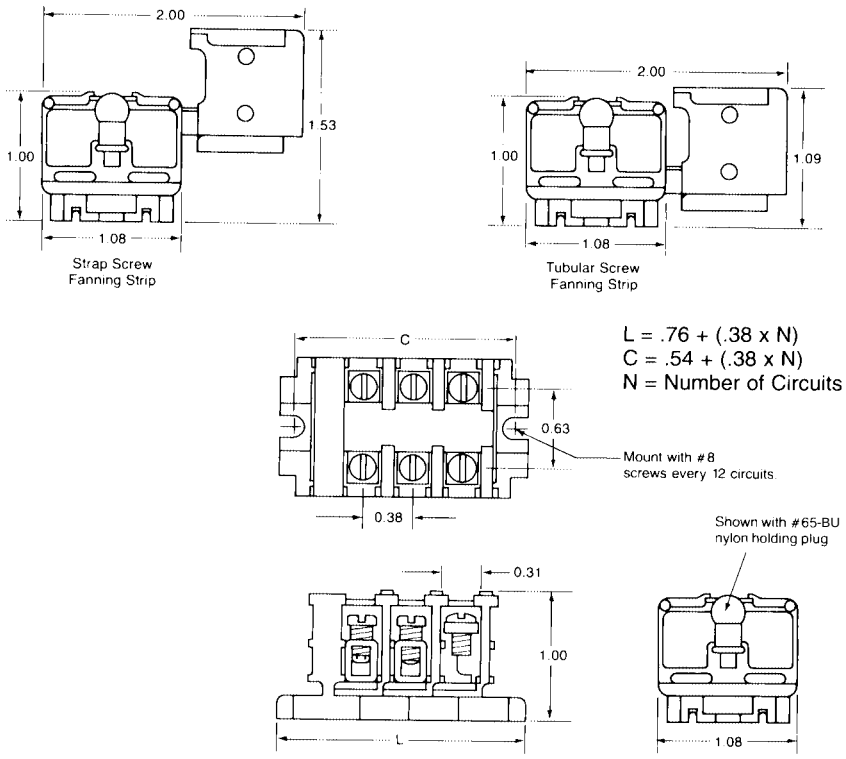

700 Series, 600 Volt Flat Base

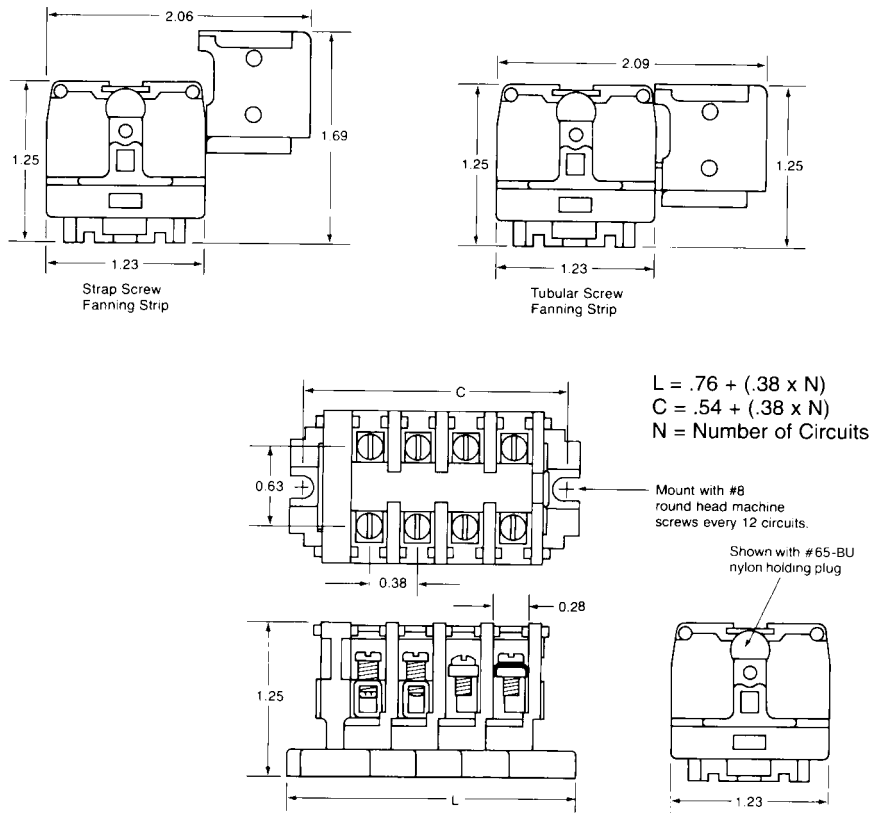

Products for Industrial & Commercial Applications

Dimensions are shown for reference purposes only.

Dimensions are in inches and millimeters unless otherwise specified. Values in brackets are metric equivalents.

Specifications subject to change.

Technical Support Center
1-800-522-6752
www.tycoelectronics.com

BP Series, Plug-In Blocks

DOVETAIL BASE MOUNTED ON STANDARD #60 CHANNEL

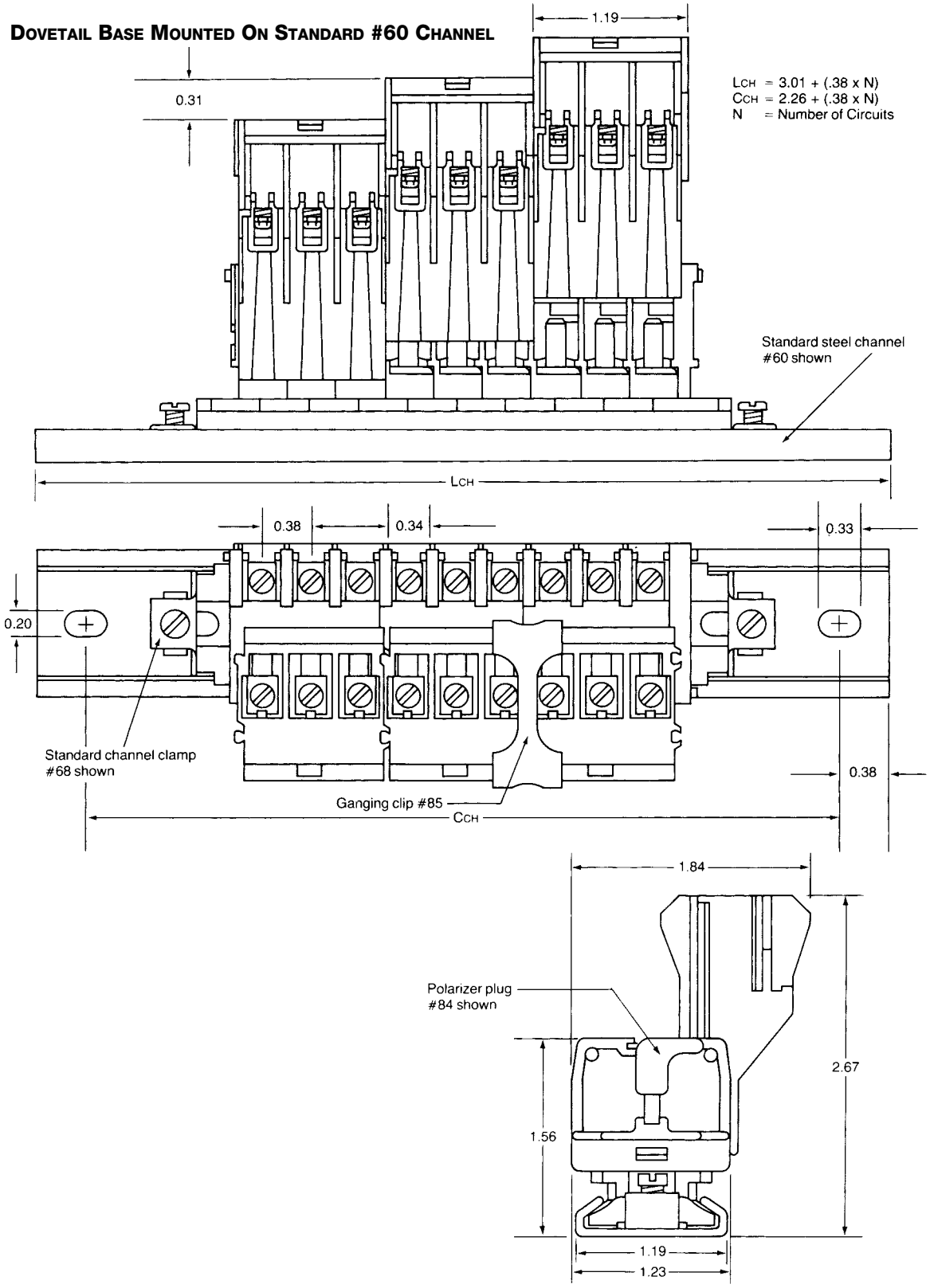

For complete product information, order Catalog 1308389

Products for Industrial & Commercial Applications
Dimensions are shown for reference purposes only.
Dimensions are in inches and millimeters unless otherwise specified. Values in brackets are metric equivalents.
Specifications subject to change.
Technical Support Center 1-800-522-6752 www.tycoelectronics.com

500 Series, 300 V Phenolic, 0.44" Pitch, High Temperature




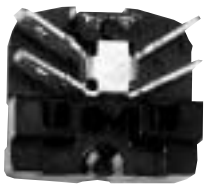

CHARACTERISTICS	STRAP SCREW	TUBULAR SCREW	TUBULAR CLAMP	QUICK CONNECT
Type of Block	**Model**	**Model**	**Model**	**Model**
Direct Mount (Flat Base)				
Painted	521-BU	524	525	527
Unpainted	511-BU	514	515-BU	517
Channel Mount (Dovetail Base)				
Painted	0521	0524	0525	0527
Unpainted	0511	0514	0515	0517
Contact Type				
				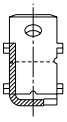
Specifications				
Wire Range (AWG) Solid & Stranded	22-10	18-8	22-10	22-12
Wire Strip Length (in.)	—	$^{11}/_{32}$	$^{11}/_{32}$	—
Screw Type	6-32 slotted binding head	10-32 slotted pan head	10-32 slotted pan head	—
Ampacity	35 A	50 A	30 A	20 A
End Sections				
Direct Mount	530-BU	530-BU	530-BU	530-BU
Channel Mount	0530	0530	0530	0530

Notes: 1. Standard package is 100 pieces for contact and 25 pieces for end sections.
2. Before ordering, see Cross Reference in Section 15 for equivalent Tyco Electronics Part Number.

Notes:
For factory assembled blocks, suffix Catalog Number with number of blocks desired. (Maximum number of flat base preassembled sections is 12.)
Example: Twenty-five sections of tubular clamp sections preassembled on channel = 051525

For unpainted factory assembled blocks supplied with a removable marking strip add — 1 to Catalog Number.

For blocks with two or more different contact sections, imprinted marking strips, or special features, consult the Technical Support Center.

Comparison (Type of Block)

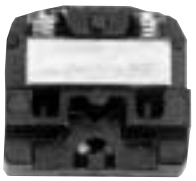


Direct Mount (Flat Base)

Channel Mount (Dovetail Base)

LR25557 E63810

For complete product information, order Catalog 1308389

Products for Industrial & Commercial Applications

Dimensions are shown for reference purposes only.

Dimensions are in inches and millimeters unless otherwise specified. Values in brackets are metric equivalents.

Specifications subject to change.

Technical Support Center
1-800-522-6752
www.tycoelectronics.com

500 Series, 300 V Phenolic, 0.44" Pitch, High Temperature (Continued)

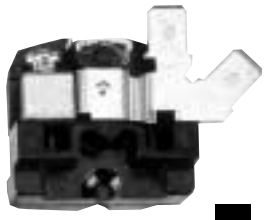
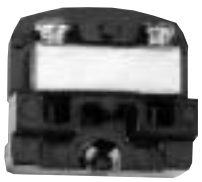
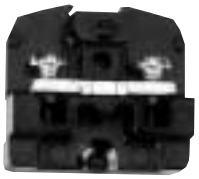



TUBULAR SCREW & QUICK CONNECT	TUBULAR PHIL SLOT	CORROSION RESISTANT STRAP SCREW	CORROSION RESISTANT TUBULAR SCREW	CORROSION RESISTANT TUBULAR CLAMP
Model	**Model**	**Model**	**Model**	**Model**
529	524PS	D521	D524	D525
519	514PS	D511	D514	D515
0529	0524PS	D0521	D0524	D0525
0519	0514PS	D0511	D0514	D0515
Contact Type				
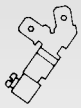				
18-8 & 22-12	18-8	22-10	18-8	22-10
—	—	—	$^{11}/_{32}$	$^{11}/_{32}$
—	—	6-32 Nickel plated Slotted Binding Head	10-32 Nickel plated Slotted Pan Head	10-32 Nickel plated Slotted Pan Head
20 A	50 A	35 A	50 A	30 A
530-BU	530-BU	530-BU	530-BU	530-BU
0530	0530	0530	0530	0530

Notes: 1. Standard package is 100 pieces for contact and 25 pieces for end sections.
2. Before ordering, see Cross Reference in Section 15 for equivalent Tyco Electronics Part Number.

SECTIONAL FANNING STRIPS

Ordering Information

CATALOG #	DESCRIPTION	STANDARD PACKAGE
54-BU	Tubular Screw	50
58	Strap Screw	50
54100	Molding Only, no contact	50



Notes:
For factory assembled fanning strips, suffix Catalog Number with number desired.
Example: Ten factory assembled sections of #58 = 5810

LR25557 E63810

For complete product information, order Catalog 1308389

Products for Industrial & Commercial Applications

Dimensions are shown for reference purposes only.

Dimensions are in inches and millimeters unless otherwise specified. Values in brackets are metric equivalents.

Specifications subject to change.

Technical Support Center
1-800-522-6752
www.tycoelectronics.com

500 Series Accessories

MOUNTING CHANNEL


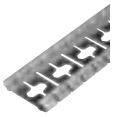


STEEL CHANNEL	BREAK AWAY STEEL	PRE-PUNCHED ALUMINUM CHANNEL
Catalog Number		
60 63-BU	60-B-36	64 67
Standard Package		
6 feet 3 feet	3 feet	6 feet 3 feet

CHANNEL CLAMPS AND ACCESSORIES







SCREW CHANNEL CLAMPS	UNIVERSAL CLAMPS	SNAP-IN CLAMPS	SEE-THRU COVER	GANGING ROD
61	68	62	57	30-BU
100	100	100	50	2 feet

JUMPERS



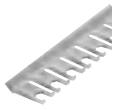


MARKING ACCESSORIES




JUMPER FOR TUBULAR CONTACTS	SNAP-APART SPADE JUMPER	SNAP-APART FLANGED JUMPER	SNAP-APART RING TONGUE JUMPER	PLASTIC CLOTH TAPE	PLASTIC CLOTH TAPE	VINYL MARKING STRIPS	ELEVATED MARKING STRIP	NYLON HOLDING PLUG
Catalog Number								
40-BU	J7140	J7240	J7340	66	55-BU	50-BU	52-BU	65-BU
Standard Package								
100	40 ckt	40 ckt	40 ckt	1 sheet	50 feet	25 feet	18 inches	100

Note: Before ordering, see Cross Reference in Section 15 for equivalent Tyco Electronics Part Number.

RELATED PRODUCT DATA
For more information on AMP Standard Terminals and Splices or Quick-Connect FASTON Receptacles and Tabs, request Catalog 82042.

For complete product information, order Catalog 1308389

Products for Industrial & Commercial Applications

Dimensions are shown for reference purposes only.

Dimensions are in inches and millimeters unless otherwise specified. Values in brackets are metric equivalents.

Specifications subject to change.

Technical Support Center
1-800-522-6752
www.tycoelectronics.com

500 Series Technical Data

Voltage Rating: Blocks meet 300 volt creepage and clearance requirements of NEMA, UL, and CSA for general industrial control equipment and panel boards. Withstand voltages greatly in excess of IEEE switchgear standards for 750 volts. Quick-connect Blocks retain 300V rating with insulated female quick connects.

Housing:

Material: Phenolic; Filled, flame retardant
Maximum Service Temp.: 150ºC (302ºF)
Breakdown Voltage AC, 60Hz
Contact-to-Contact: 6,600V (3,800V w/ Quick Connect)
Contact-to-Ground: 9600V
Dielectric Strength: 300 Volts/mil thickness per ASTM D149 (25ºC-RH40% at Sea Level)
UL High Voltage Arc Tracking Test (Inches/min.): .49-.58
Water Absorption (24 hrs. % wt. gain): 0.45% per ASTM D570
Flammability: UL94V-1
Chemical Resistance: Resistant to acids, alkalines, and aliphatic hydrocarbons and ketones, per ASTM D543.
Radiation Resistance (ergs g-1 (C)): 2.7×10^8
Color: Black

Standard Contacts

Electrical grade copper or copper alloy conductor. Steel Screws. Tube and screws are plated to resist corrosion in most industrial applications.

Environmental Contacts (for highly corrosive atmospheres)

Tubular Screw: Electrical grade copper tube with nickel plating. Nickel plated brass screws.
Strap Screw: Nickel plated brass straps and screws. Nickel plating exceeds specification QQ-N-290 Class I, Type VII. Maximum Width of Lugs is 5/16".



Group Circuits with Interlocking Fanning Strips

LR25557 E63810

For complete product information, order Catalog 1308389

Products for Industrial & Commercial Applications

Dimensions are shown for reference purposes only.

Dimensions are in inches and millimeters unless otherwise specified. Values in brackets are metric equivalents.

Specifications subject to change.

Technical Support Center
1-800-522-6752
www.tycoelectronics.com

500 Series, 300 Volt

DOVETAIL BASE MOUNTED ON STANDARD #60 CHANNEL

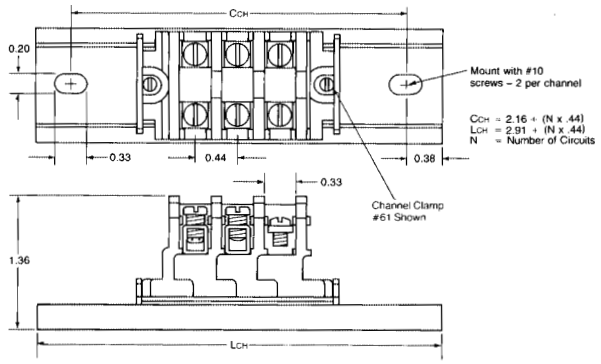

SECTIONAL FANNING STRIPS

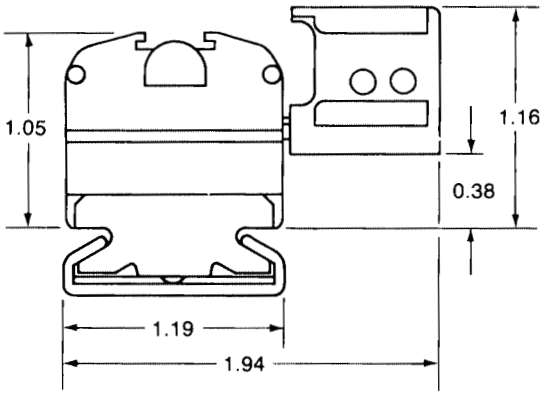

FLAT BASE (DIRECT MOUNT)

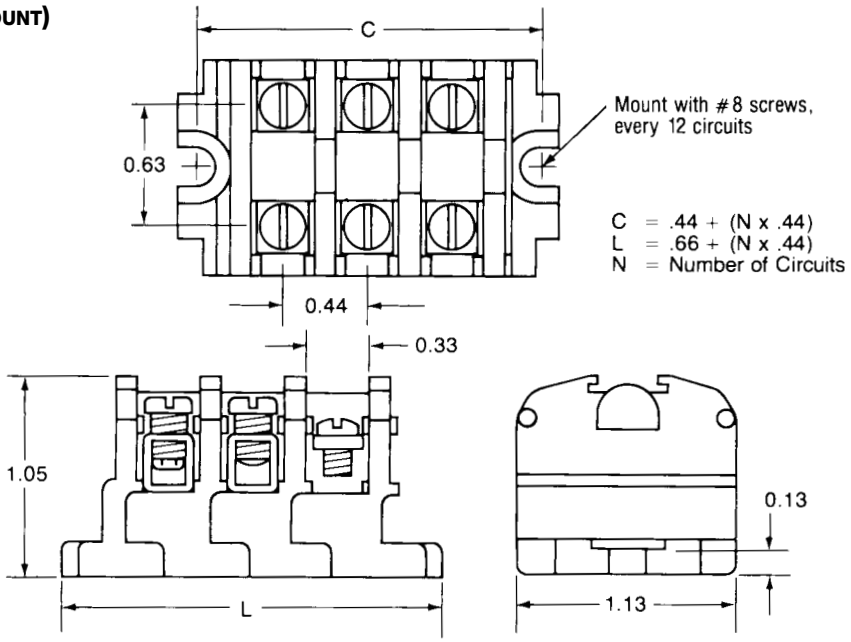

For complete product information, order Catalog 1308389

LR25557 E63810

Products for Industrial & Commercial Applications

Dimensions are shown for reference purposes only.

Dimensions are in inches and millimeters unless otherwise specified. Values in brackets are metric equivalents.

Specifications subject to change.

Technical Support Center
1-800-522-6752
www.tycoelectronics.com

200 Series, Heavy Duty Phenolic Blocks

DESCRIPTION/APPLICATION

This family of phenolic heavy duty blocks is ideal for high temperature, high current applications. The rugged material withstands temperatures up to 302˚ F (150˚ C).



DESIGN ADVANTAGES

- Sturdy Heavy Duty block accepts single or combinations of wire up to #4 AWG solid or stranded — at least 122 circuits per 6-foot length, 9/16" center-to-center spacing.
- Choose from four different contact styles conservatively rated up to 90 amperes.
- 600 volt UL and NEMA rating.
- Surface mounted flat base and channel mounted dovetail base models available.
- Only one end section needed per block assembly.
- Interlocking sectional fanning strips allow entire circuit groups to be connected and disconnected as a single unit.
- Readily identify circuits — available with painted marking surface or use removable marking strip. Pre-printed strips are also available.
- Factory assembled blocks available.
- Heavy Duty Phenolic Block Sections Snap-fit with 300 & 600 volt, medium duty phenolic, heavy duty nylon and polypropylene, and Fuse and Switch blocks.

LR25557 E63810

For complete product information, order Catalog 1308389

Products for Industrial & Commercial Applications

Dimensions are shown for reference purposes only.

Dimensions are in inches and millimeters unless otherwise specified. Values in brackets are metric equivalents.

Specifications subject to change.

Technical Support Center
1-800-522-6752
www.tycoelectronics.com

200 Series, Heavy Duty Phenolic, 600 V, 0.56" Pitch






CHARACTERISTICS	STRAP SCREW	STRAP CLAMP	TUBULAR SCREW	TUBULAR CLAMP
Type of Block	**Model**	**Model**	**Model**	**Model**
Direct Mount (Flat Base)				
Painted	221	228-BU	222-BU	223-BU
Unpainted	211	218	212	213
Channel Mount (Dovetail Base)				
Painted	0221	0228	0222	0223
Unpainted	0211	0218	0212	0213
Contact Type				
				
Specifications				
Wire Range (AWG) Solid & Stranded	22-10	18-8	18-4	18-6
Wire Strip Length (in.)	—	1/2	1/2	1/2
Screw Type	10-32 slotted binding head	8-32 pan head w/clamp	1/4-28 slotted headless	1/4-28 slotted headless
Ampacity	35 A	50 A	85 A	65 A
End Sections				
Direct Mount	230-BU	230-BU	230-BU	230-BU
Channel Mount	0230	0230	0230	0230

Notes: 1. Standard packaging is 40 pieces for contact and 25 pieces for end sections.
2. Before ordering, see Cross Reference in Section 15 for equivalent Tyco Electronics Part Number.

Notes:
For factory assembled blocks, suffix Catalog Number with number of blocks desired. (Maximum number of flat base preassembled sections is 12).
Example: Twenty dovetail based, tubular clamp blocks, preassembled on channel = 021320 (plain marking area)

Example: Twelve preassembled flat base, strap screw blocks = 22112 (painted marking area)

For factory assembled blocks supplied with a removable marking strip add — 1 to Catalog Number.

For blocks with two or more different contact sections, imprinted marking strips, or special features, consult the Technical Support Center.

Environmental contacts for highly corrosive atmospheres are available with nickel plating on non-ferrous hardware. To order, prefix Catalog # with “D”.

Comparison (Type of Block)




Direct Mount (Flat Base)

Channel Mount (Dovetail Base)

LR25557 E63810

For complete product information, order Catalog 1308389

Products for Industrial & Commercial Applications

Dimensions are shown for reference purposes only.

Dimensions are in inches and millimeters unless otherwise specified. Values in brackets are metric equivalents.

Specifications subject to change.

Technical Support Center
1-800-522-6752
www.tycoelectronics.com

200 Series, Heavy Duty Phenolic, 600 V, 0.56" Pitch (Continued)







CORROSION RESISTANT STRAP SCREW	CORROSION RESISTANT TUBULAR SCREW	CORROSION RESISTANT TUBULAR CLAMP
Model	**Model**	**Model**
D221	D222	D223
D211	D212	D213
D0221	D0222	D0223
D0211	D0212	D0213
Contact Type		
		
22-10	18-4	22-10
—	1/2	1/2
10-32 Nickel plated Slotted Binding Head	1/4-28 Nickel plated Slotted Headless	1/4-28 Nickel plated Slotted Headless
35 A	85 A	65 A
230-BU	230-BU	230-BU
0230	0230	0230

Notes: 1. Standard packaging is 40 pieces for contact and 25 pieces for end sections.
2. Before ordering, see Cross Reference in Section 15 for equivalent Tyco Electronics Part Number.

SECTIONAL FANNING STRIPS

Ordering Information

CATALOG #	DESCRIPTION	STANDARD PACKAGE
24	Tubular Screw	25
27	Strap Screw	25
2400	Molding Only, no contact	50

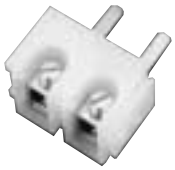



Note:
For factory assembled fanning strips, suffix Catalog Number with number desired
Example: Ten factory assembled sections of #24 = 2410

LR25557 E63810

For complete product information, order Catalog 1308389

Products for Industrial & Commercial Applications

Dimensions are shown for reference purposes only.

Dimensions are in inches and millimeters unless otherwise specified. Values in brackets are metric equivalents.

Specifications subject to change.

Technical Support Center
1-800-522-6752
www.tycoelectronics.com

200 Series, Heavy Duty Phenolic Accessories

MOUNTING CHANNEL


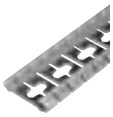


STEEL CHANNEL	BREAK AWAY STEEL	PRE-PUNCHED ALUMINUM CHANNEL
Catalog Number		
60 63-BU	60-B-36	64 67
Standard Package		
6 feet 3 feet	3 feet	6 feet 3 feet

CHANNEL CLAMPS







SCREW CHANNEL CLAMPS	UNIVERSAL CLAMPS	SNAP-IN CLAMPS	SEE-THRU COVER	GANGING ROD
Catalog Number				
61	68	62	23-BU	30-BU
Standard Package				
100	100	100	25	2 feet

MARKING ACCESSORIES




PLASTIC CLOTH TAPE	PLASTIC CLOTH TAPE	VINYL MARKING STRIPS	ELEVATED MARKING STRIP	NYLON HOLDING PLUG
Catalog Number				
56	55-BU	50-BU	52-BU	65-BU
Standard Package				
10 sheets	50 feet	25 feet	18 inches	100

JUMPERS




JUMPER FOR TUBULAR CONTACTS	JUMPER FOR STRAP SCREW
41-BU	43
100	100

Note: Before ordering, see Cross Reference in Section 15 for equivalent Tyco Electronics Part Number.

RELATED PRODUCT DATA
For more information on AMP Standard Terminals and Splices or Quick-Connect FASTON Receptacles and Tabs, request Catalog 82042.

200 Series, Heavy Duty Phenolic Specifications

Standard Contacts

MATERIAL: Electrical grade copper or copper alloy conductor. Steel Screws plated to resist corrosion in most industrial applications.

Environmental Contacts (for highly corrosive atmospheres)

TUBULAR SCREW: - Electrical grade copper tube with nickel plating.
Nickel plated brass screws.
STRAP SCREW: - Nickel plated brass straps and screws
Nickel plating exceeds specification QQ-N-290 Class I, Type VII.

WIRE RANGE: Strap Screw: #22-10 AWG max., solid or stranded with crimp terminals
STRAP CLAMP: #18-8 AWG, solid or stranded
TUBULAR SCREW: #18-4 AWG, solid or stranded
TUBULAR CLAMP: #18-6 AWG, solid or stranded

WIRE STRIP LENGTH: Strap Screw: As needed for lugging
STRAP CLAMP: 1/2 in.
TUBULAR SCREW: 1/2 in.
TUBULAR CLAMP: 1/2 in.

SCREW TYPE: Strap Screw: 10-32 slotted binding head
STRAP CLAMP: 8-32 pan head w/ clamp
TUBULAR SCREW: 1/4-28 slotted headless
TUBULAR CLAMP: 1/4-28 slotted headless

STRAP SCREW: Maximum width of lugs: 11/32 in.

Nylon Housing

MATERIAL: Phenolic, Filled Flame Retardant
MAX. CONTINUOUS TEMPERATURE: 150ºC, (302ºF)
BREAKDOWN VOLTAGE:
Contact-to-Contact: 7800V
Contact-to-Ground: 9400V
DIELECTRIC STRENGTH (RH 40% at Sea Level): 300 Volts/mil thickness per ASTM #D149
UL HIGH VOLTAGE ARC TRACKING (INCHES/MIN.): .49-.58
WATER ABSORPTION (24 hrs. % wt. gain): 0.45% per ASTM D570
FLAMMABILITY: UL94V-1
CHEMICAL RESISTANCE: Resistant to acids, alkalies, and aliphatic hydrocarbons and ketones, per ASTM D543.
RADIATION RESISTANCE (ergs g-1 (C)): 2.7 x 10^8 min.
COLOR: Black

INDEPENDENT TESTING SERVICE LISTING AND RECOGNITION
WIRE SIZES, Solid or Stranded Tublar Screw
Tubular Screw
1 #4 AWG, 1 #6 AWG,
1 or 2 #8 AWG, 1 to 4 #10 AWG,
1 or 5 #12 AWG, 1 to 6 #14 AWG,
1 or 6 #16 AWG, 1 to 8 #18 AWG,
Tubular Clamp
1 #6 AWG, 1 or 2 #8 AWG,
1 to 3 #10 AWG, 1 to 4 #12 AWG,
1 or 4 #14 AWG, 1 to 6 #16 AWG,
1 or 8 #18 AWG
Strap Clamp
1 #18 to 1 #8 AWG

LR25557 E63810

For complete product information, order Catalog 1308389

Products for Industrial & Commercial Applications

Dimensions are shown for reference purposes only.

Dimensions are in inches and millimeters unless otherwise specified. Values in brackets are metric equivalents.

Specifications subject to change.

Technical Support Center
1-800-522-6752
www.tycoelectronics.com

200 Series, Heavy Duty Phenolic

FLAT BASE

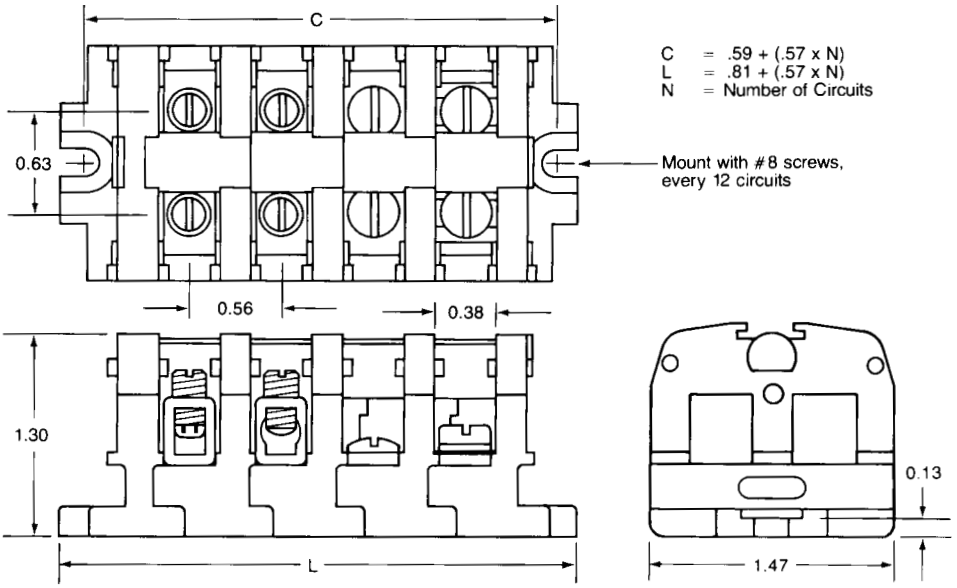

DOVETAIL BASE MOUNTED ON STANDARD #60 CHANNEL

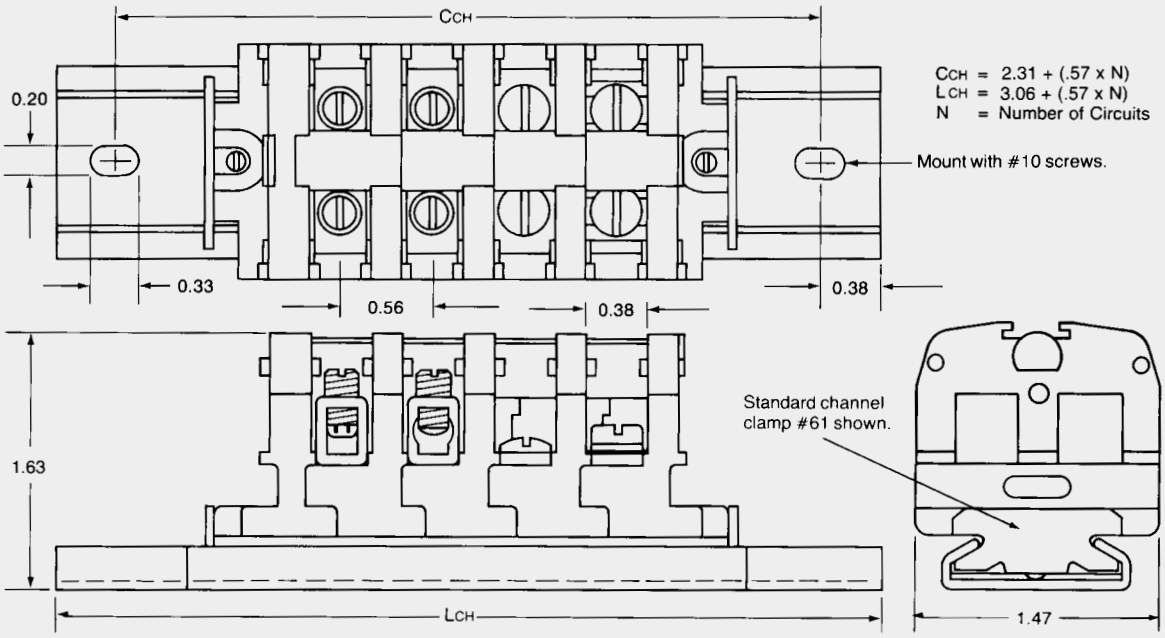

SECTIONAL FANNING STRIPS

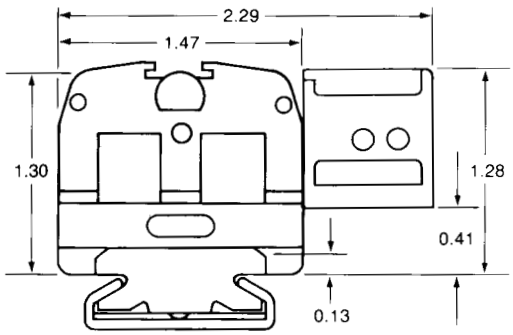

For complete product information, order Catalog 1308389

Products for Industrial & Commercial Applications

Dimensions are shown for reference purposes only.

Dimensions are in inches and millimeters unless otherwise specified. Values in brackets are metric equivalents.

Specifications subject to change.

Technical Support Center
1-800-522-6752
www.tycoelectronics.com

800 Series, Intermediate Heavy Duty

Description / Application

This line of 600 volt blocks is rated up to 150 A and is available in a standard version and a corrosion resistant version.



Design Advantages

- An exceptionally compact block that accepts single or combinations of AWG wire sizes as large as #1/0 — at least 92 circuits per 6-foot length, 3/4 inch center-to-center spacing.
- Tubular screw contact style accepts AWG wire sizes from #12 thru #1/0, solid or stranded.
- Same block mounts on surface or channel — two-way mounting base fits standard channel or mounts directly to flat surfaces.
- Packaged for rapid handling and assembly — snap-fit sections packaged 10 per carton.
- Contacts conservatively rated at 155 amperes per circuit when used with copper wire.
- Only one end section needed per block assembly.
- Readily identify circuits — blocks available with painted marking surface or use removable vinyl marking strip. Preprinted marking strips are also available.
- Factory assembled blocks available.
- Nylon housing material for the most rugged applications.
- Allen head screw for aluminum wire — screw tip design helps protect aluminum wire from overtightening. Slotted screw head for copper wire.
- Intermediate Heavy Duty blocks snap-fit with 300 & 600V, Medium Duty phenolic, Heavy Duty nylon, polypropylene and phenolic and Fuse and Switch blocks.

For complete product information, order Catalog 1308389

LR25557 E63810

Products for Industrial & Commercial Applications

Dimensions are shown for reference purposes only.

Dimensions are in inches and millimeters unless otherwise specified. Values in brackets are metric equivalents.

Specifications subject to change.

Technical Support Center
1-800-522-6752
www.tycoelectronics.com

800 Series, Intermediate Heavy Duty, 600 V, 0.75" Pitch

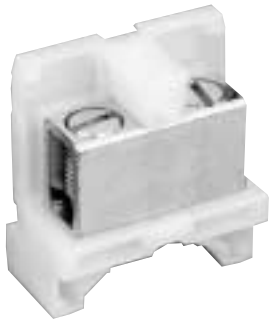

Physical Properties

Housing

Material: Polyamide type 6/6, unfilled
Max Continuous Temp.: 125° C (257° F)
Water Absorption (24hrs. % wt. gain): 1.5%
Flammability: 94V-2
Chemical Resistance: Resistant to aromatic hydrocarbons, strong alkalies
Radiation Resistance (ergs g^{-1} (C): 8 x 10^7
Color: Translucent white

Electrical Properties

Voltage Rating: Blocks meet 600V clearance and creepage requirements of NEMA, UL, and CSA standards for general industrial control equipment and panelboards. Withstand voltages in excess of IEEE switchgear standards for 750V.
Breakdown Voltage, AC, 60Hz:
Contact-to-Contact: 8,800V
Contact-to-Ground: 9000V
Dielectric Strength — RH 40% @ Sea Level: 470-385 Volts/mil thickness per ASTM D149
Operating Voltage: Blocks meet 600V creepage and clearance requirements; withstand voltage greatly exceeds standards for 750V
UL High Voltage Arc Tracking (in./min.): .01-.35

Contacts

Standard Contacts

Material: Electrical grade copper conductor
Screws: Steel, zinc plated to resist corrosion in most applications

Duramax Contacts
(for highly corrosive atmospheres)

Tubular Screw: Electrical grade copper tube with nickel plating; nickel plated brass screws. Nickel plating exceeds specification QQ-N-290 Class 1, Type VII.
Wire Range: #12-1/0 AWG, solid or stranded
Wire Strip Length: 11/16"
Screw Type: 7/16" - 20 slotted headless screw

INDEPENDENT TESTING SERVICE LISTING AND RECOGNITION
UL Wire Sizes: Solid or Stranded, Tubular Screw
1 — #1/0 AWG, 1 — #1 AWG
1 — #2 AWG, 1 or 2 — #4 AWG
1, 2 or 3 — #6 AWG, 1, 2, 3 or 5 — #8 AWG
1 to 6 — #10 AWG, 1 to 7 — #12 AWG

Note: Before ordering, see Cross Reference in Section 15 for equivalent Tyco Electronics Part Number.

Ordering Information

CATALOG #	DESCRIPTION
814	Tubular Screw, Unpainted
824-BU	Tubular Screw, Painted
D814-BU	Corrosion Resistant, Unpainted
D824	Corrosion Resistant, Painted
830-BU	End Section

NOTES:
For factory assembled blocks on channel, prefix Catalog # with "0" and suffix with number of blocks desired. Without channel (maximum of 6 sections) delete "0".
Example: Ten tubular screw sections preassembled on channel = 082410

For unpainted factory assembled blocks supplied with a removable marking strip add -1 to Catalog Number.

For blocks with two or more different contact sections, imprinted marking strips or special features; consult the Technical Support Center.

LR25557 E63810

For complete product information, order Catalog 1308389

Products for Industrial & Commercial Applications
Dimensions are shown for reference purposes only.
Dimensions are in inches and millimeters unless otherwise specified. Values in brackets are metric equivalents.
Specifications subject to change.
Technical Support Center
1-800-522-6752
www.tycoelectronics.com

800 Series, Intermediate Heavy Duty Accessories

MOUNTING CHANNEL


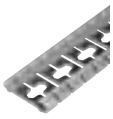
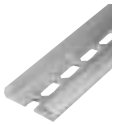

STEEL CHANNEL	BREAK AWAY STEEL	PRE-PUNCHED ALUMINUM CHANNEL
Catalog Number		
60 63-BU	60-B-36	64 67
Standard Package		
6 feet 3 feet	3 feet	6 feet 3 feet

CHANNEL CLAMPS







SCREW CHANNEL CLAMPS	UNIVERSAL CLAMPS	SNAP-IN CLAMPS	SEE-THRU COVER	GANGING ROD
Catalog Number				
61	68	62	93-BU	30
Standard Package				
100	100	100	25	2 feet

MARKING ACCESSORIES




PLASTIC CLOTH TAPE	PLASTIC CLOTH TAPE	VINYL MARKING STRIPS	ELEVATED MARKING STRIP	NYLON HOLDING PLUG
Catalog Number				
66	55-BU	50-BU	52	16
Standard Package				
1 sheet	50 feet	25 feet	18 inches	100

JUMPERS



SNAP-APART JUMPER
Catalog Number
76
Standard Package
12 ckt

Note: Before ordering, see Cross Reference in Section 15 for equivalent Tyco Electronics Part Number.

RELATED PRODUCT DATA
For more information on AMP Standard Terminals and Splices or Quick-Connect FASTON Receptacles and Tabs, request Catalog 82042.

800 Series, Intermediate Heavy Duty

FLAT BASE

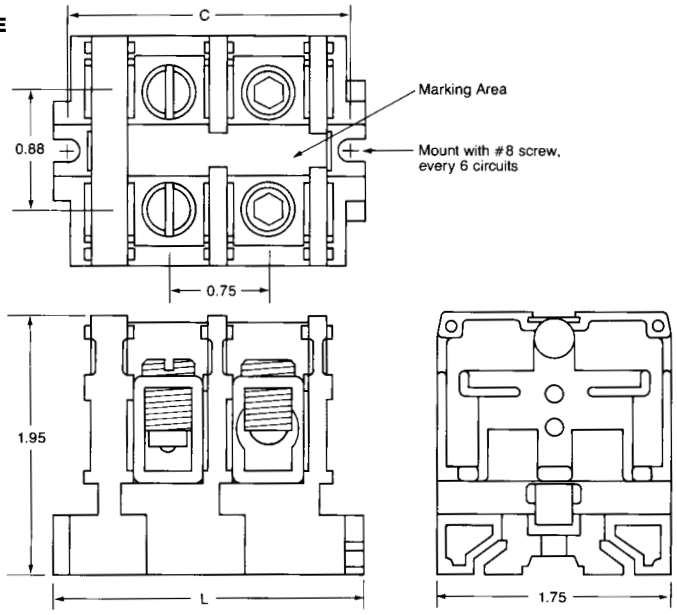

DOVETAIL BASE MOUNTED ON STANDARD #60 CHANNEL

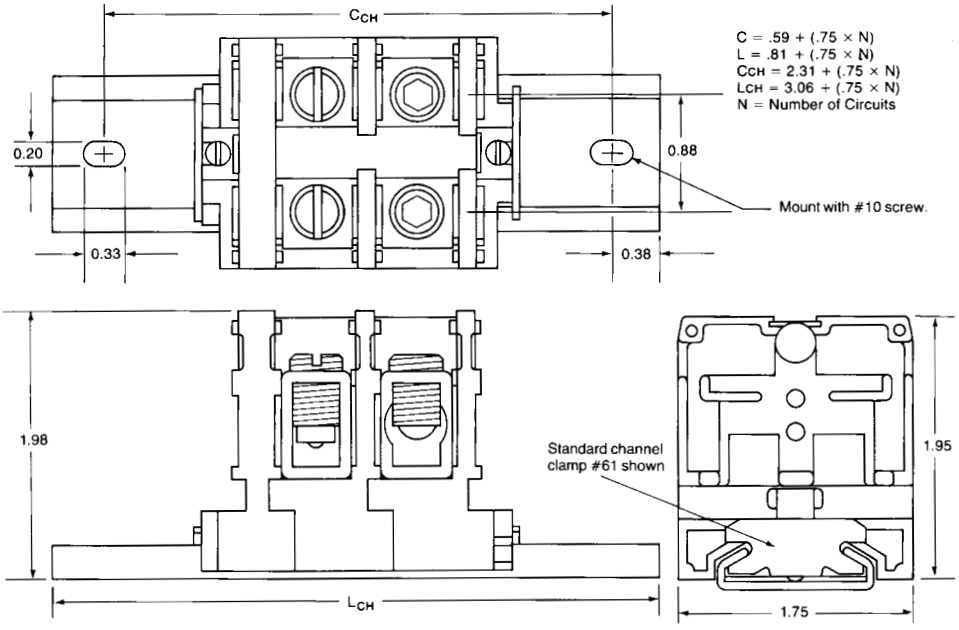

LR25557 E63810

For complete product information, order Catalog 1308389

Products for Industrial & Commercial Applications

Dimensions are shown for reference purposes only.

Dimensions are in inches and millimeters unless otherwise specified. Values in brackets are metric equivalents.

Specifications subject to change.

Technical Support Center
1-800-522-6752
www.tycoelectronics.com

Table of Contents

Soft Shell Pin and Socket Connectors
Universal MATE-N-LOK II Connectors 9003-9014
Universal MATE-N-LOK Connectors 9015-9028
Commercial MATE-N-LOK Connectors 9029-9040
.140 MATE-N-LOK Connectors, Large Insulation 9041-9043
.093 Commercial Pin and Socket Connectors 9044-9049
Mini-Universal MATE-N-LOK 2 Connectors 9050-9057
Mini-Universal MATE-N-LOK Connectors 9058-9066
Micro MATE-N-LOK 3 mm Pitch Connector System 9067
(MR) Miniature Rectangular Connectors 9068-9076
.062 Commercial Pin and Socket Connectors 9077-9079
Technical Documents 9080
Application Tooling 9081-9084
Feature Comparisons 9085
AMP-DUAC Connectors 9086-9093

Precision Pin and Socket Contacts
Introduction 9094
Current Carrying Capabilities 9095, 9096
Signal Contacts
Type III+, Precision Formed, Crimp, Snap-In 9101
Type III+, Precision Formed, Solder and Solder Tab Type 9102
Type III+ (Grounding Pins), Precision Formed, Crimp, Snap-In 9103
Type III+, Precision Formed, Posted 9104
Type II, Screw Machined, Crimp, Snap-In 9105
Size 20 DF, Precision Formed, Crimp, Snap-In 9106, 9107
Size 20 DF, Precision Formed, Solder, Snap-In 9107
Power Contacts
Type I, Screw Machined, Crimp, Snap-In 9108
High Current Type II and Type III+, Crimp, Snap-In 9109
High Current Size 20, Screw Machined, Posted 9110
High Current .125 POWERBAND Contacts, Crimp, Snap-In 9111
Standard Size 8, Screw Machined, Crimp, Snap-In 9112
High Current Size 8 for Metrimate Drawer Connectors 9113
Type XII, Precision Formed, Crimp, Snap-In 9114
High Current Type XII, Screw Machined, Crimp, Snap-In 9115
Coaxial Contacts
Subminiature, Size 16, Screw Machined, Crimp, Snap-In 9116, 9117
Miniature, Size 12, Screw Machined, Crimp, Snap-In 9117, 9118

Circular Connectors for Commercial Signal and Power Applications
Circular Plastic Connectors (Introduction, Series and Types,
Performance Characterisitics) 9119-9123
Series 1 9124-9130
Series 2 9131-9135
Series 3 . . . . . 9136, 9137
Series 4 9138
Circular Plastic Connector Accessories 9139-9142
One-Piece Sealed Circular Plastic Connectors 9143
Series 1 9144
Series 5 9145
Series 6 9145
Two-Piece Sealed Circular Plastic Connectors 9146
Series 5 9147
Series 6 9148
Series 1 9149
Sealing Accessories 9150-9152

Products for Industrial & Commercial Applications
Dimensions are shown for reference purposes only.
Dimensions are in inches and millimeters unless otherwise specified. Values in brackets are metric equivalents.
Specifications subject to change.
Technical Support Center 1-800-522-6752 www.tycoelectronics.com

Table of Contents

Circular Connectors for Commercial Signal and Power Applications (Continued)
MIL-C-5015 Style Circular Plastic Connectors 9153
Shell Sizes 20-14 and 18-10 . . . . . .9154, 9155
Type III+ Contacts and Application Tooling 9155
Metal-Shell Circular Plastic Connectors 9156
Series 1 9157-9159
Series 2 9160-9162
Series 3 9163-9165
Series 4 . . . . . .9166, 9167
Accessories 9169

MICRODOT Circular Connectors 9170, 9171

M Series Pin and Socket Connectors
Introduction, Material Specifications, “How to Choose” 9173-9175
Cable-to-Cable Selection Guide 9176-9183
Cable-to-Panel Selection Guide 9184-9191
Standard Housings 9192-9199
Posted Connectors 9200
V.35 Special Application Connectors 9201-9209
Fastening Hardware 9210-9212
Keying Hardware 9211
Guiding Hardware 9213
Protective Hardware 9214-9219
Strain Relief Hardware 9220
Technical Documents 9221, 9222

Metrimate Pin and Socket Connectors
Introduction, Applications 9223-9225
Standard Drawer Connectors 9226
Blindmate Power Connectors 9227
Drawer Connector Specifications 9228-9234
Low Profile Drawer Connectors 9235
Square Grid Connectors 9236-9242
In-Line Connectors, 5 mm (.197) Centerline 9242-9246
In-Line Connectors, 5.08 mm (.200) Centerline 9247-9249
Rectangular Connectors 9250, 9251
Commoning Connectors 9252
Power Distribution Connector 9252

Econoseal Sealed Pin and Socket Connectors 9253-9259

Product Facts

- **Ultimate reliability**
- **For use where repair or replacement would be difficult**
- **Pins and sockets can be intermixed in the same housing**
- **Available in 2 thru 15 circuit sizes for free hanging or panel mount wire-to-wire connection**
- **Mate with standard Universal MATE-N-LOK Housings and PC Board Headers**
- **Uses standard Universal MATE-N-LOK panel cutouts and strain reliefs**
- **Polarized housings available in UL94V-0 flammability rated material**
- **Enclosed contacts for shock protection**
- **F-Crimp terminals accept 30-10 AWG [.05 -5.0 mm^2] wire sizes**
- **Contacts available in strip and loose form**
- **Lanceless contacts for tangle free handling**
- **Insulation capability to .200 [5.08] diameter**
- **Connector design provides for complete contact insertion**
- **Three-point stabilization precisely controls contact alignment, minimizing stubbing**
- **Tin or duplex gold plated contacts**
- **Contacts are on .250 [6.35] centerline spacing**
- **Not for interrupting current**
- **Recognized under the Component Program of Underwriters Laboratories Inc., File No. E28476**
- **Certified by Canadian Standards Association, File No. LR 7189**
- **Passed test by VDE under their Registration Number 3980/Continuous Surveillance**

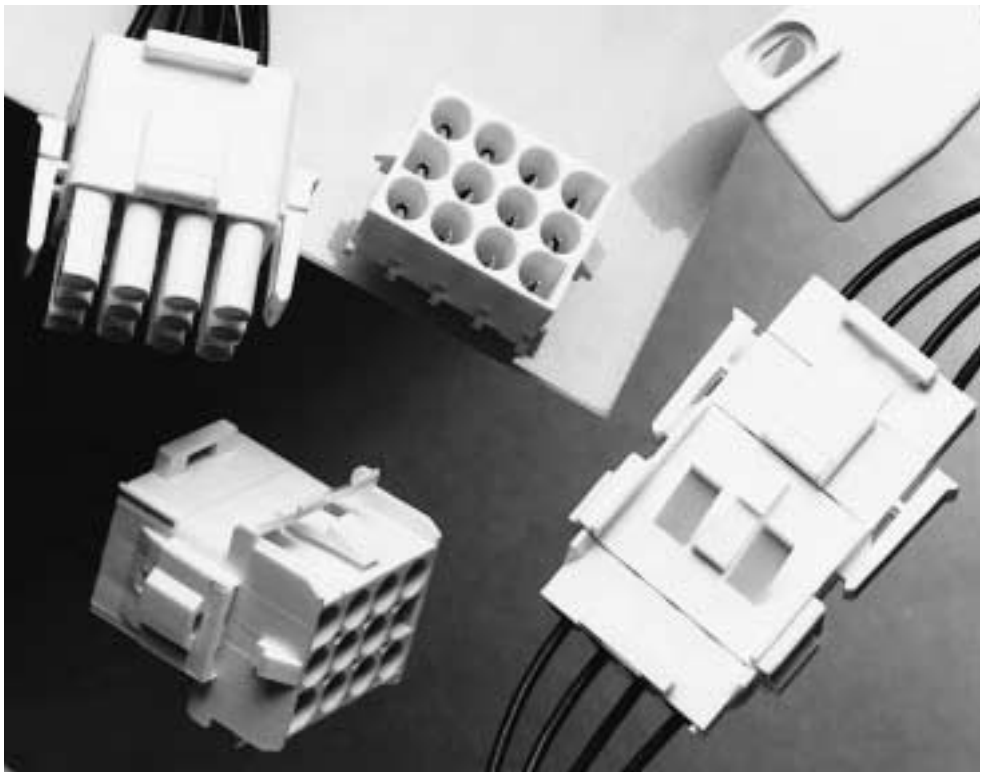

Performance Characteristics:

The Universal MATE-N-LOK II Connector performance characteristics found below are based on free hanging and panel mount connectors, loaded with contacts crimped on stranded wire.

Dielectric Withstanding Voltage — 5.0 KV AC or DC between adjacent circuits initially

Insulation Resistance — 1000 megohms minimum between adjacent circuits

Voltage Rating — 600V AC or DC

Connector Mating — Split Pin — 1.5 lb. max. per circuit

Connector Unmating — Split Pin — .5 lb. min. per circuit

Contact Insertion Force — 3.0 lb. max. per contact unassembled

Contact Retention — 35 lb. min. per contact

Durability — 50 cycles, mating and unmating

Technical Documents:

Product Specification
108-1090 Universal MATE-N-LOK II Connectors

Application Specification
114-1043 Universal MATE-N-LOK II Contacts

Instruction Sheet
408-3200 Housing, Contacts and Accessories

For complete product information, order Catalog 82181

Universal MATE-N-LOK II Connector Mating Combinations

Connector Part Numbers				Mating Connector Part Numbers									
						PC Board Headers							
						Vertical Pin[2]			Vertical Socket[2]			Right-Angle[2]	
Number of Circuits	Flammability Rating	Style	Plug Kit Part Numbers[2]	Cap Kit Part Numbers[2]	Plating	Standard Tail	Standard Tail Polarized	Long Tail	Standard Tail	Standard Tail Polarized	Long Tail	Pin	Socket
2	UL94V-0	In-Line	770017-1	770024-1	Pre-tin	350786-1	641964-1	350787-1	350824-1	643412-1	350831-1	1-350942-0	643226-1
					Duplex[1]	350786-2	641964-2	350787-2	350824-2	—	—	2-350942-0	—
3	UL94V-0	In-Line	770018-1	770025-1	Pre-tin	350789-1	641966-1	350790-1	350825-1	643414-1	350832-1	1-350943-0	643228-1
					Duplex[1]	350789-2	—	350790-2	350825-2	643414-2	350832-2	2-350943-0	—
4	UL94V-0	In-Line	770019-1	770026-1	Pre-tin	350792-1	641968-1	350793-1	350826-1	643416-1	350833-1	1-350944-0	643230-1
					Duplex[1]	350792-2	—	350793-2	350826-2	—	350833-2	2-350944-0	643230-2
5	UL94V-0	In-Line	770016-1	—	Pre-tin	640900-1	643406-1	—	640901-1	—	—	1-350945-0	643232-1
					Duplex[1]	640900-2	—	—	640901-2	—	—	2-350945-0	643232-2
6	UL94V-0	Matrix	770020-1	770027-1	Pre-tin	350711-1	641970-1	350732-1	350827-1	643424-1	350834-1	—	—
					Duplex[1]	350711-2	641970-2	350732-2	350827-2	643424-2	350834-2	—	—
9	UL94V-0	Matrix	770021-1	770028-1	Pre-tin	350712-1	641972-1	350742-1	350828-1	643426-1	350835-1	—	—
					Duplex[1]	350712-2	641972-2	350742-2	350828-2	643426-2	350835-2	—	—
12	UL94V-0	Matrix	770022-1	770029-1	Pre-tin	350713-1	641974-1	350737-1	350829-1	643428-1	350836-1	—	—
					Duplex[1]	350713-2	641974-2	350737-2	350829-2	—	350836-2	—	—
15	UL94V-0	Matrix	770023-1	770030-1	Pre-tin	350714-1	641976-1	350738-1	350830-1	643430-1	350837-1	—	—
					Duplex[1]	350714-2	—	350738-2	350830-2	—	350837-2	—	—

[1] Duplex Finish — Plated with .000030 [.000762] min. gold in mating area, matte tin-lead on solder tail end over .000050 [.00127] min. nickel underplate on entire contact.
[2] Universal MATE-N-LOK II Plug and Cap housings accept pin or socket contacts. Use the appropriate contacts in the Plug housing as required by the mating component.

Contacts

Product Specifications:

Split pin diameter—.086 [2.18]
Stock thickness—.012 [.305]

These contacts can be used in either Universal MATE-N-LOK II Plug or Cap housings.

Related Product Data:

Performance Characteristics — page 9003
Housings — pages 9006-9008
Application Tooling — pages 9081-9083

Technical Documents: pages 9003 and 9080
Product Specification
108-1090 Universal MATE-N-LOK II Connectors
Application Specification
114-1043 Universal MATE-N-LOK II Contacts

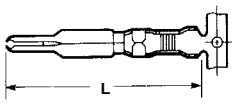

Pin

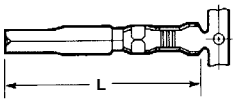

Socket

Wire Size Range AWG [mm²]	Ins. Dia. Range	L Dim. Pin	L Dim. Socket	Material & Finish	Contact Part Numbers Pin Strip Form	Contact Part Numbers Pin Loose Form	Contact Part Numbers Socket Strip Form	Contact Part Numbers Socket Loose Form	HDM Applicator Part Numbers	Hand Tool Part Numbers
30-26 [.05-.12]	**.032-.057** .813-1.45	**1.005** 25.53	**.980** 24.90	Phos. Brz. Gold[1]	770011-6	770512-6	770012-6	770416-6	567252-1[6] 567252-4[6]	58439-1
24-18 [.2-.8]	**.040-100** 1.02-2.54	**1.005** 25.53	**.980** 24.90	Brass. Pre-tin	770009-1	770252-1	—	—	567214-1[6] 567214-2[6] 567214-4[6]	90300-2
				Brass. Duplex[2]	770009-2	770252-2	—	—		
				Phos. Brz. Pre-tin	—	—	770010-3	770253-3		
				Phos. Brz. Duplex[2]	—	—	770010-4	770253-4		
20-14 [.5-2.0]	**.060-.130** 1.52-3.30	**1.005** 25.53	**.980** 24.90	Brass. Pre-tin	770007-1	770250-1	—	—	567213-1[6] 567213-2[6] 567213-4[6]	90296-2
				Brass. Duplex[2]	770007-2	770250-2	—	—		
				Phos. Brz. Pre-tin	—	—	770008-3	770251-3		
				Phos. Brz. Duplex[2]	—	—	770008-4	770251-4		
20-14 [.5-2.0]	**.130-.200** 3.30-5.08	**.995** 25.27	**.970** 24.63	Brass. Pre-tin	770005-1	770248-1	—	—	567212-1[6] 567212-2[6] 567212-4[6]	90298-2[4] 90299-2[4]
				Brass. Duplex[2]	770005-2	770248-2	—	—		
				Phos. Brz. Pre-tin	—	—	770006-3	770249-3		
				Phos. Brz. Duplex[2]	770005-4	—	770006-4	770249-4		
12-10 [3.0-5.0]	**.200 max.**[3] 5.08	**1.005** 25.53	**.980** 24.90	Phos. Brz. Pre-tin	770003-3	770246-3	770004-3	770247-3	567211-1[6] 567211-2[6] 567211-4[6]	69710-1[5]
				Phos. Brz. Duplex[2]	770003-4	770246-4	770004-4	770247-4		

[1] Gold Finish — Plated with .000030 [.000762] min. gold in mating area and inside wire barrel over .000050 [.00127] min. nickel underplate on entire contact.
[2] Duplex Finish — Plated with .000030 [.000762] min. gold in mating area and .000050 [.00127] min. tin-lead in crimp area over .000050 [.00127] min. nickel underplate on entire contact.
[3] There is no insulation barrel on this contact. Insulation maximum diameter is limited by the housing. Use of strain relief is recommended with these contacts.
[4] Use Hand Tool No. **90298-2** for 20–18 AWG and No. **90299-2** for 16–14 AWG.
[5] Hand Tool No. 69710-1 uses die set No. **58380-1** for 12 AWG and No. **58380-2** for 10 AWG.
[6] HDM Applicator part number ending in -1 is used on AMPOMATOR CLS Machine with T or G Terminators, -2 is used on AMP-O-LECTRIC Model K Machine, -4 is used on AMP-O-LECTRIC Model G Machine. See page 9083 for further information.

Grounding Pin

(Mate first, break last, not for interrupting current)

Solid pin diameter—.084 [2.13]
.100 [2.54] longer than standard pin
Stock thickness—.012 [.304]
These contacts can be used in either Universal MATE-N-LOK II Plug or Cap housings only.

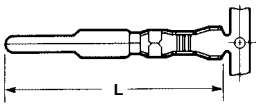

Wire Size Range AWG [mm²]	Ins. Dia. Range	L Dim.	Material & Finish	Contact Part Numbers Strip Form	Contact Part Numbers Loose Form	HDM Applicator Part Numbers	Hand Tool Part Numbers
20-14 [.5-2.0]	**.060-.130** 1.52-3.30	**1.105** 25.53	Brass. Pre-tin	770193-1	770254-1	567213-1[3] 567213-2[3] 567213-4[3]	90296-2
			Brass. Duplex[1]	770193-2	770254-2		
20-14 [.5-2.0]	**.130-.200** 3.30-5.08	**1.085** 27.56	Brass. Pre-tin	770194-1	770255-1	567212-1[3] 567212-2[3] 567212-4[3]	90298-2 90299-2[2]
			Brass. Duplex[1]	770194-2	770255-2		

[1] Duplex Finish — Plated with .000030 [.000762] min. gold in mating area and .000050 [.00127] min. tin-lead in crimp area over .000050 [.00127] min. nickel underplate on entire contact.
[2] Use Hand Tool No. **90298-2** for 20–18 AWG and No. **90299-2** for 16–14 AWG.
[3] HDM Applicator part number ending in -1 is used on AMPOMATOR CLS Machine with T or G Terminators, -2 is used on AMP-O-LECTRIC Model K Machine, -4 is used on AMP-O-LECTRIC Model G Machine. See page 9083 for further information.


Latch Disengaging Tool
Part Number 58382-1
IS 408-9436

For complete product information, order Catalog 82181


Contact Extraction Tool
(For extracting contacts crimped on 24 AWG or smaller wire)
Part Number 318851-1
IS 408-4371


Contact Insertion Tool
(For inserting contacts applied to small diameter wire)
Part Number 91002-1
IS 408-7347

Housing Kits, Free Hanging or Panel Mount

Product Specification:

Centerline spacing—.250 [6.35]

Material :

Nylon

Flammability Rating—UL 94V-0

Related Product Data:

Performance Characteristics— page 9003
Contacts— page 9005
Panel Cutout Recommendations— page 9008
Test Connectors— page 9028
Keying Plug— page 9009
Strain Reliefs— page 9009
Kit Components— page 9008

Technical Documents: pages 9003 and 9080

Product Specification
108-1090 Universal MATE-N-LOK II Connectors

Other Mating Connectors:

Universal MATE-N-LOK Housings — page 9019
Universal MATE-N-LOK Headers — pages 9010 thru 9012
Universal MATE-N-LOK Test Connectors — page 9028

2 Circuit, In-line

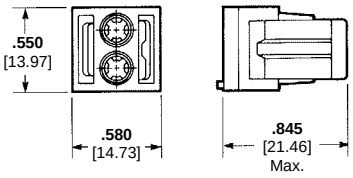

Plug Rear

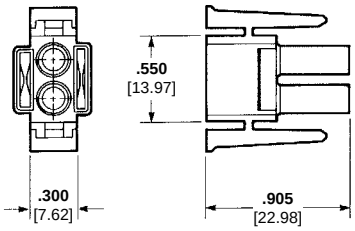

Plug Front

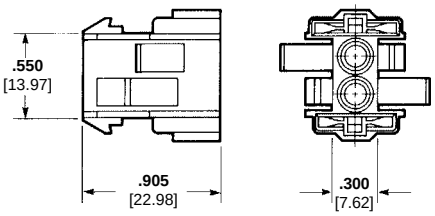

Cap Front

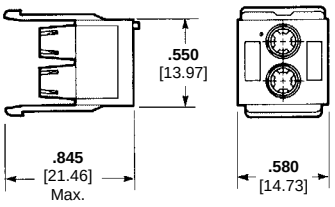

Cap Rear

3, 4 and 5 Circuit, In-Line

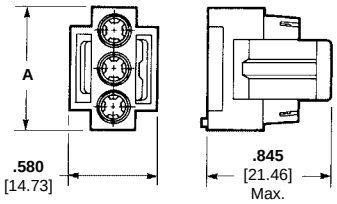

Plug Rear

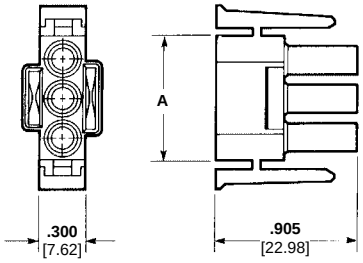

Plug Front

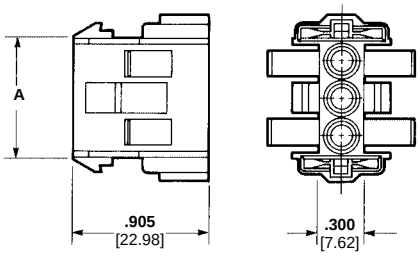

Cap Front

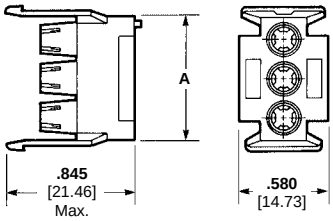

Cap Rear

Number of Circuits	A Dim.	Kit Part Numbers (Includes Front and Rear)	
		Plug	Cap
2	—	770017-1	770024-1
3	**.800** 20.32	770018-1	770025-1
4	**1.050** 26.67	770019-1	770026-1
5	**1.300** 33.02	770016-1[4]	—

Notes: 1. Kits consist of a front and rear component.
2. Kit components can be purchased separately. Page 9008
3. Packaging: Bulk—250 each component per poly bag/box.
4. Mates with standard Universal MATE-N-LOK cap housing Part Number 350810-1 and 640900-X or 640901-X Vertical headers.

For complete product information, order Catalog 82181

Products for Industrial & Commercial Applications
Dimensions are shown for reference purposes only.
Dimensions are in inches and millimeters unless otherwise specified. Values in brackets are metric equivalents.
Specifications subject to change.
Technical Support Center
1-800-522-6752
www.tycoelectronics.com

Housing Kits, Free Hanging or Panel Mount

Product Specification:

Centerline spacing—.250 [6.35]

Material :

Nylon

Flammability Rating—UL 94V-0

Related Product Data:

Performance Characteristics— page 9003
Contacts— page 9005
Test Connectors— page 9028
Panel Cutout Recommendations— page 9008
Keying Plug— page 9009
Strain Reliefs— page 9009
Kit Components— page 9008

Technical Documents: pages 9003 and 9080

Product Specification
108-1090 Universal MATE-N-LOK II Connectors

Other Mating Connectors:

Universal MATE-N-LOK Connectors— page 9019
Universal MATE-N-LOK Headers— pages 9010 thru 9012
Universal MATE-N-LOK Test Connectors— page 9028

6 Circuit, Matrix

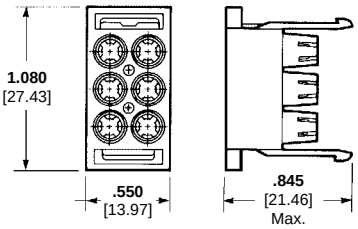

Plug Rear

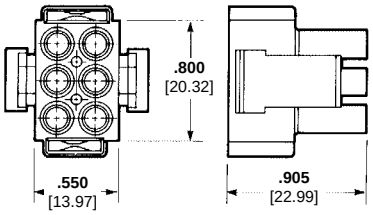

Plug Front

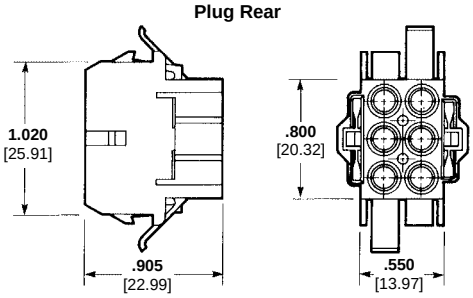

Cap Front

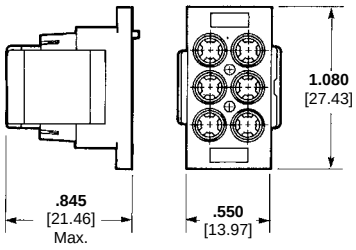

Cap Rear

9, 12 and 15 Circuit, Matrix

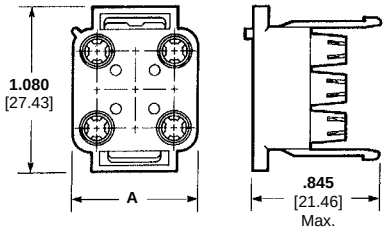

Plug Rear

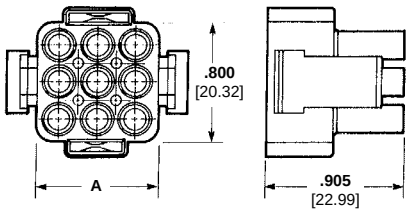

Plug Front

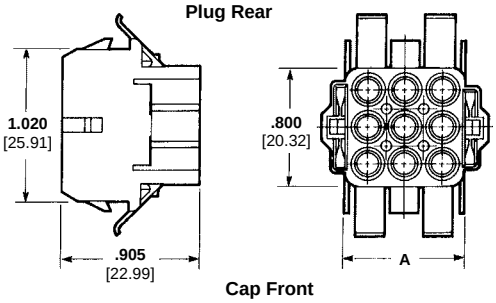

Cap Front

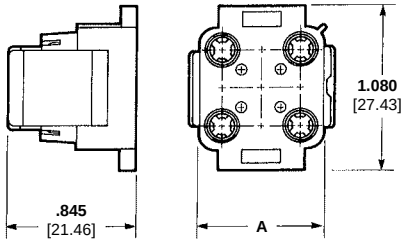

Cap Rear

Number of Circuits	A Dim.	Kit Part Numbers (Includes Front and Rear)	
		Plug	Cap
6	—	770020-1	770027-1
9	**.800** 20.32	770021-1	770028-1
12	**1.050** 26.67	770022-1	770029-1
15	**1.300** 33.02	770023-1	770030-1

Notes: 1. Kits consist of a front and rear component.
2. Kit components can be purchased separately. Pg. 9008
3. Packaging: Bulk—250 each component per poly bag/box.

For complete product information, order Catalog 82181

Products for Industrial & Commercial Applications
Dimensions are shown for reference purposes only.
Dimensions are in inches and millimeters unless otherwise specified. Values in brackets are metric equivalents.
Specifications subject to change.
Technical Support Center
1-800-522-6752
www.tycoelectronics.com

Housing Components, Free Hanging or Panel Mount

Product Specification:

Centerline spacing—.250 [6.35]

Material :

Nylon

Flammability Rating—UL 94V-0

Related Product Data:

Performance Characteristics — page 9003
Contacts — page 9005
Illustrations and Dimensions — pages 9006, 9007
Panel Cutout Recommendations — page 9008
Keying Plug — page 9009
Strain Reliefs — page 9009

Technical Documents: pages 9003 and 9080

Product Specification
108-1090 Universal MATE-N-LOK II Connectors

Other Mating Connectors:

Universal MATE-N-LOK Connectors — page 9019
Universal MATE-N-LOK Headers — pages 9010 thru 9012
Universal MATE-N-LOK Test Connectors — page 9028

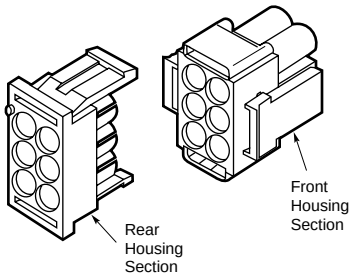

Plug Housing

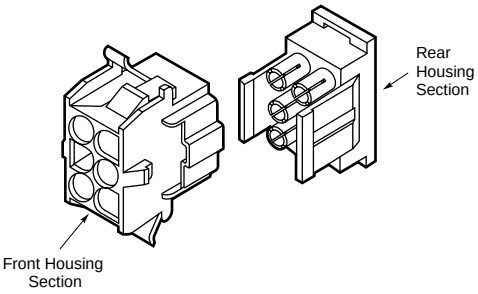

Cap Housing

Number of Circuit	Kit Component Part Numbers					
	Plug			Cap		
	Kit	Front	Rear	Kit	Front	Rear
2	770017-1	770031-1	770032-1	770024-1	770045-1	770046-1
3	770018-1	770033-1	770034-1	770025-1	770047-1	770048-1
4	770019-1	770035-1	770036-1	770026-1	770049-1	770050-1
5	770016-1	770319-1	770320-1	—	—	—
6	770020-1	770037-1	770038-1	770027-1	770051-1	770052-1
9	770021-1	770039-1	770040-1	770028-1	770053-1	770054-1
12	770022-1	770041-1	770042-1	770029-1	770055-1	770056-1
15	770023-1	770043-1	770044-1	770030-1	770057-1	770058-1

Notes: 1. Kits consist of a front and rear component.
2. Kit components can be purchased separately.

Recommended Cap Housing Panel Cutout

View is from cap entry side

Refer to Application Specification 114-1043

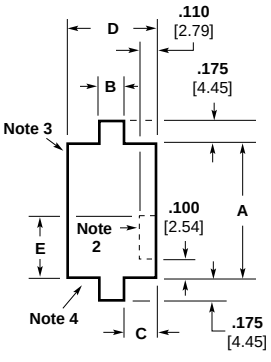

Number of Circuits	Dimensions				
	A	B	C	D	E
2	**.565** 14.35	**.340** 8.63	**.095** 2.41	**.530** 13.46	**.250** 6.35
3	**.815** 20.70	**.340** 8.63	**.095** 2.41	**.530** 13.46	**.250** 6.35
4	**1.065** 27.05	**.340** 8.63	**.095** 2.41	**.530** 13.46	**.250** 6.35
6	**.565** 14.35	**.480** 12.19	**.275** 6.99	**1.030** 26.16	**.250** 6.35
9	**.815** 20.70	**.480** 12.19	**.275** 6.99	**1.030** 26.16	**.250** 6.35
12	**1.065** 27.05	**.480** 12.19	**.275** 6.99	**1.030** 26.16	**.350** 8.89
15	**1.315** 33.40	**.480** 12.19	**.275** 6.99	**1.030** 26.16	**.350** 8.89

Notes:
1. Recommended panel thickness—.030-.090 [.762-2.286]. Panel must be punched so that housing enters panel in same direction as the punch.
2. Optional—Do not remove this material when keying cap housing to panel.
3. Circuit #1 location when using panel keying with 6, 9, 12 and 15 circuit housings.
4. Circuit #1 location when using panel keying with 2, 3, and 4 circuit housings.

For complete product information, order Catalog 82181

Products for Industrial & Commercial Applications
Dimensions are shown for reference purposes only.
Dimensions are in inches and millimeters unless otherwise specified. Values in brackets are metric equivalents.
Specifications subject to change.
Technical Support Center 1-800-522-6752 www.tycoelectronics.com

Plug or Cap Housing Strain Reliefs

Instruction Sheet:
IS 408-3320

Material :
Nylon
Flammability Rating — UL 94V-0

2, 3, 4, 5, 6, 9, 12 and 15 Circuit (Enclosed)

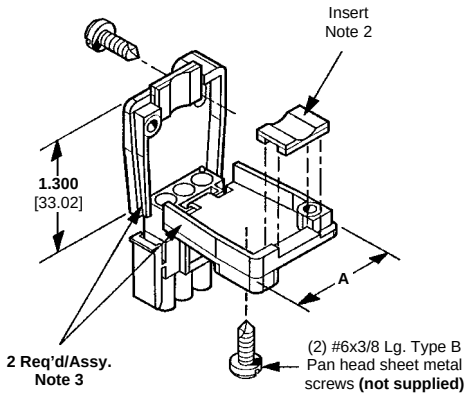

In-Line

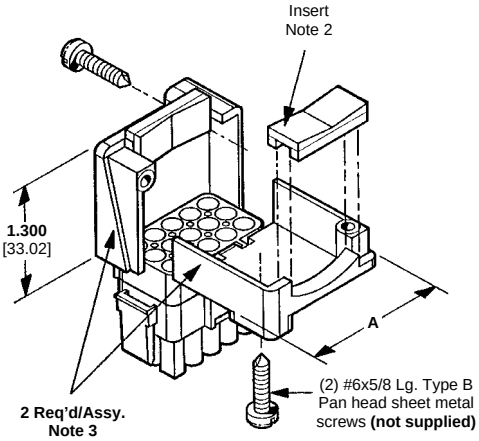

Matrix

Style	Number of Circuits	A Dim.	Insert Supplied	Single Wire Dia. Range	Wire Bundle Dia. Range	Strain Relief Part Numbers
In-Line	2	**.960** 24.38	Yes	**.040 – .190** 1.02 – 4.83	—	640713-1
			No	—	**.200 – .350** 5.08 – 8.89	640713-2
	3	**1.140** 28.96	Yes	**.040 – .190** 1.02 – 4.83	—	640714-1
			No	—	**.200 – .350** 5.08 – 8.89	641945-1
	4	**1.340** 34.04	Yes	**.040 – .190** 1.02 – 4.83	—	641776-1
			No	—	**.200 – .350** 5.08 – 8.89	641776-2
	5	**1.530** 38.86	Yes	**.040 – .190** 1.02 – 4.83	—	643030-1
			No	—	**.200 – .350** 5.08 – 8.89	643030-4
Matrix	6	**1.030** 26.16	Yes	—	**.120 – .650** 3.05 – 16.51	640715-1
	9	**1.030** 26.16	Yes	—	**.120 – .650** 3.05 – 16.51	640716-1
	12	**1.280** 32.51	Yes	—	**.150 – .750** 3.81 – 19.05	640717-1
	15	**1.530** 38.86	Yes	—	**.200 – .850** 5.08 – 21.59	640718-1

Notes: 1. Insert comes attached to strain relief. It can be used to provide additional adjustment for small wire bundles or discarded.
2. Insert to be positioned as shown by dotted lines.
3. Strain relief part number represents one-half of a strain relief. Two of a part number are required for one connector.

Keying Plug

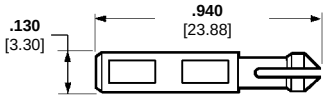

Part Number
UL94V-0 Nylon material — **770377-1**

Related Product Data:
Housings — pages 9006 thru 9008

Technical Documents: pages 9003 and 9080
IS 408-3200

For complete product information, order Catalog 82181

Products for Industrial & Commercial Applications
Dimensions are shown for reference purposes only.
Dimensions are in inches and millimeters unless otherwise specified. Values in brackets are metric equivalents.
Specifications subject to change.
Technical Support Center
1-800-522-6752
www.tycoelectronics.com

PC Board Vertical Pin Headers

Product Specification:

Centerline spacing—.250 [6.35]

Material:

Housing — Nylon
Flammability Rating — UL94V-0
Contacts — Phosphor bronze
Solder tail diameter .062 [1.57]

Related Product Data:

Performance Characteristics — page 9015

Technical Documents: pages 9015 and 9080

Product Specification
108-1053 Universal MATE-N-LOK PC Board Headers

Mating Connectors:

Universal MATE-N-LOK II Plug Housings — pages 9006 thru 9008

Universal MATE-N-LOK Plug Housings — page 9019

2, 3, 4 and 5 Circuit, In-Line

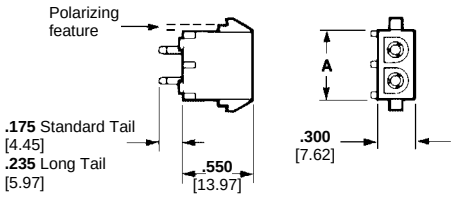

Number of Circuits	A Dim.	Pin Finish	Pin Header Part Numbers				Mates with Plug Housing Part Numbers (Using Socket Contacts)	
			Standard Tail[2]	Standard Tail Polarized[2]	ACTION PIN Tail Polarized	Long Tail[3]	UMNL II	UMNL
2	.550 13.97	Pre-tin	350786-1	641964-1 1-641964-1[4]	—	350787-1	770017-1	350777-1
		Duplex[1]	350786-2	641964-2	—	350787-2		
3	.800 20.32	Pre-tin	350789-1	641966-1 1-641966-1[4]	—	350790-1	770018-1	350766-1
		Duplex[1]	350789-2	—	—	350790-2		
4	1.050 26.67	Pre-tin	350792-1	641968-1	1318725-1[4]	350793-1	770019-1	350779-1
		Duplex[1]	350792-2	643406-1		350793-2		
5	1.300 33.02	Pre-tin	640900-1	643406-3[4]	—	—	770016-1	350809-1
		Duplex[1]	640900-2	—	—	—		

[1] Duplex Finish — Plated with .000030 [.000762] min. gold in mating area, matte tin-lead on solder tail end over .000050 [.00127] min. nickel underplate on entire contact.
[2] Use Standard Tail for .062 [1.57] thick PC Board.
[3] Use Long Tail for .125 [3.18] thick PC Board.
[4] Black in color.

6, 9, 12 and 15 Circuit, Matrix

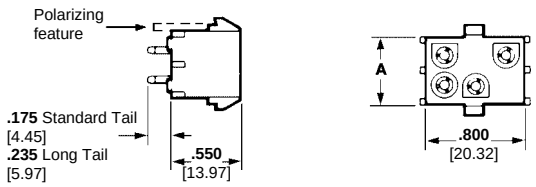

Number of Circuits	A Dim.	Pin Finish	Pin Header Part Numbers			Mates with Plug Housing Part Numbers (Using Socket Contacts)	
			Standard Tail[2]	Standard Tail Polarized[2]	Long Tail[3]	UMNL II	UMNL
6	.550 13.97	Pre-tin	350711-1	794605-1[4]	350732-1	770020-1	350715-1
		Duplex[1]	350711-2	641970-2	350732-2		
9	.800 20.32	Pre-tin	350712-1	641972-1 794603-1[4,5] 794674-1	350742-1	770021-1	350720-1
		Duplex[1]	350712-2	641972-2 1-641972-1[4]	350742-2		
12	1.050 26.67	Pre-tin	350713-1	641974-1 1-641974-1[4]	350737-1	770022-1	350735-1
		Duplex[1]	350713-2	641974-2	350737-2		
15	1.300 33.02	Pre-tin	350714-1	641976-1	350738-1	770023-1	350736-1
		Duplex[1]	350714-2	—	350738-2		

[1] Duplex Finish — Plated with .000030 [.000762] min. gold in mating area, matte tin-lead on solder tail end over .000050 [.00127] min. nickel underplate on entire contact.
[2] Use Standard Tail for .062 [1.57] thick PC Board.
[3] Use Long Tail for .125 [3.18] thick PC Board.
[4] Black in color.
[5] Material—UL 94V-2.

For complete product information, order Catalog 82181

Products for Industrial & Commercial Applications

Dimensions are shown for reference purposes only.

Dimensions are in inches and millimeters unless otherwise specified. Values in brackets are metric equivalents.

Specifications subject to change.

Technical Support Center
1-800-522-6752
www.tycoelectronics.com

PC Board Vertical Socket Headers

Product Specification:

Centerline spacing—.250 [6.35]

Material:

Housing—Nylon
Flammability Rating—UL94V-0
Contacts—Phosphor bronze
Solder tail diameter .062 [1.57]

Related Product Data:

Performance Characteristics—page 9015

Technical Documents: pages 9015 and 9080

Product Specification
108-1053 Universal MATE-N-LOK PC Board Headers

Mating Connectors:

Universal MATE-N-LOK II Plug Housings—pages 9006 thru 9008

Universal MATE-N-LOK Plug Housings—page 9019

2, 3, 4 and 5 Circuit, In-Line

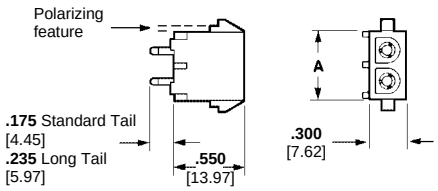

Number of Circuits	A Dim.	Socket Finish	Socket Header Part Numbers			Mates with Plug Housing Part Numbers (Using Pin Contacts)	
			Standard Tail[2]	Standard Tail Polarized[2]	Long Tail[3]	UMNL II	UMNL
2	**.550** 13.97	Pre-tin	350824-1	643412-1	350831-1	770017-1	350777-1
		Duplex[1]	350824-2	643412-2	—		
3	**.800** 20.32	Pre-tin	350825-1	643414-1	350832-1	770018-1	350766-1
		Duplex[1]	350825-2	643414-2	350832-2		
4	**1.050** 26.67	Pre-tin	350826-1	643416-1	350833-1	770019-1	350779-1
		Duplex[1]	350826-2	—	350833-2		
5	**1.300** 33.02	Pre-tin	640901-1	—	—	770016-1	350809-1
		Duplex[1]	640901-2	—	—		

[1] Duplex Finish—Plated with .000030 [.000762] min. gold in mating area, matte tin-lead on solder tail end over .000050 [.00127] min. nickel underplate on entire contact.
[2] Use Standard Tail for .062 [1.57] thick PC Board.
[3] Use Long Tail for .125 [3.18] thick PC Board.

6, 9, 12 and 15 Circuit, Matrix

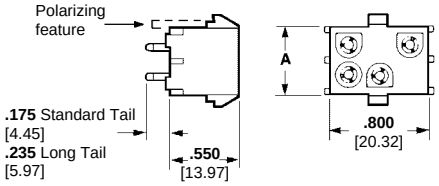

Number of Circuits	A Dim.	Socket Finish	Socket Header Part Numbers			Mates with Plug Housing Part Numbers (Using Pin Contacts)	
			Standard Tail[2]	Standard Tail Polarized[2]	Long Tail[3]	UMNL II	UMNL
6	**.550** 13.97	Pre-tin	350827-1	643424-1	350834-1	770020-1	350715-1
		Duplex[1]	350827-2	643424-2	350834-2		
9	**.800** 20.32	Pre-tin	350828-1	643426-1	350835-1	770021-1	350720-1
		Duplex[1]	350828-2	643426-2	350835-2		
12	**1.050** 26.67	Pre-tin	350829-1	643428-1	350836-1	770022-1	350735-1
		Duplex[1]	350829-2	—	350836-2		
15	**1.300** 33.02	Pre-tin	350830-1	643430-1	350837-1	770023-1	350736-1
		Duplex[1]	350830-2	—	350837-2		

[1] Duplex Finish—Plated with .000030 [.000762] min. gold in mating area, matte tin-lead on solder tail end over .000050 [.00127] min. nickel underplate on entire contact.
[2] Use Standard Tail for .062 [1.57] thick PC Board.
[3] Use Long Tail for .125 [3.18] thick PC Board.

For complete product information, order Catalog 82181

Products for Industrial & Commercial Applications

Dimensions are shown for reference purposes only.

Dimensions are in inches and millimeters unless otherwise specified. Values in brackets are metric equivalents.

Specifications subject to change.

Technical Support Center
1-800-522-6752
www.tycoelectronics.com

PC Board Vertical Pin Headers with ACTION PIN Contacts

PC Board Vertical Pin Headers with ACTION PIN Contacts

Material:

Housing — PBT, black
Flammability Rating — UL94V-0
Contacts — Copper alloy, plated with tin-lead over nickel on entire contact

Related Product Data:

Performance Characteristics — page 9015

Technical Documents: pages 9015 and 9080

Product Specification
108-5222 ACTION PIN Universal MATE-N-LOK ACTION PIN Header Assembly

Mating Connectors:

Universal MATE-N-LOK II Plug Housings — pages 9006 thru 9008
Universal MATE-N-LOK Plug Housings — page 9019

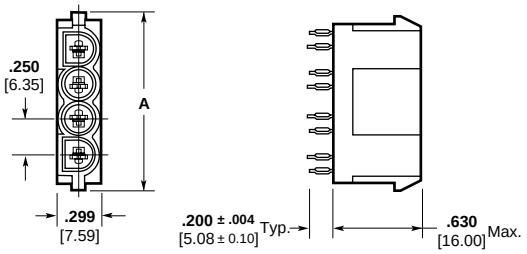

Number of Circuits	A Dim.	Part Numbers	Mates with Housing Part Numbers (Using Socket Contacts)	
			UMNL II	UMNL
2	**.750** 19.05	173924-1*	770017-1	350777-1
3	**1.000** 25.40	173925-1*	770018-1	350766-1
4	**1.250** 31.75	173926-1*	770019-1	350779-1

Note: Install in PC Board with arbor frame tool.

PC Board Right-Angle Pin and Socket Headers

2, 3, 4 and 5 Circuit, In-line

Product Specification:

Centerline spacing—.250 [6.35]

Material:

Housing — Nylon
Flammability Rating — UL 94V-0
Contacts — Phosphor bronze
Solder tail width .052 [1.32]

Related Product Data:

Performance Characteristics — pg. 9015

Technical Documents: pg. 9015 and 9080

Product Specification
108-1053 Universal MATE-N-LOK PC Board Headers

Mating Connectors:

Universal MATE-N-LOK II Plug Housings — pg. 9006 and 9008
Universal MATE-N-LOK Plug Housings — pg. 9019

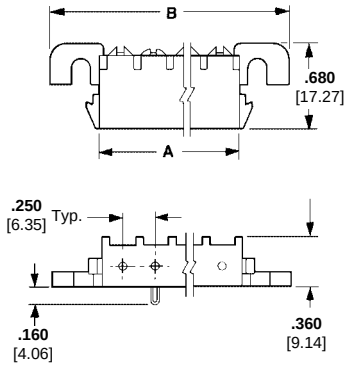

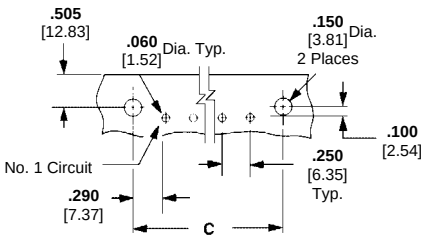

Use 6-32 UNC Pan Head Screw
3/8 [9.53] long for mounting
(Not Supplied)

Recommended PC Board Hole Layout
.062 [1.57] Board Thickness

Number of Circuits	Dimensions A	B	C	Contact Finish	Right-Angle Header Part Numbers Pin	Socket	Mates with UMNL II	Mates with UMNL
2	**.550** 13.97	**1.245** 31.62	**.830** 21.08	Pre-tin	1-350942-0	643226-1	770017-1	350777-1
				Duplex[1]	2-350942-0	—		
3	**.800** 20.32	**1.495** 37.97	**1.080** 27.43	Pre-tin	1-350943-0	643228-1	770018-1	350766-1
				Duplex[1]	2-350943-0	643228-2		
4	**1.050** 26.67	**1.745** 44.32	**1.330** 33.78	Pre-tin	1-350944-0	643230-1	770019-1	350779-1
				Duplex[1]	2-350944-0	643230-2		
5	**1.300** 33.02	**1.995** 50.67	**1.580** 40.13	Pre-tin	1-350945-0	643232-1	770016-1	350809-1
				Duplex[1]	2-350945-0	643232-2		

[1] Duplex Finish — Plated with .000030 [.000762] min. gold in mating area, matte tin-lead on solder tail end over .000050 [.00127] min. nickel underplate on entire contact.

For complete product information, order Catalog 82181

Products for Industrial & Commercial Applications

Dimensions are shown for reference purposes only.

Dimensions are in inches and millimeters unless otherwise specified. Values in brackets are metric equivalents.

Specifications subject to change.

Technical Support Center
1-800-522-6752
www.tycoelectronics.com

Cable-to-Cable Connectors

Material:

Body — Copper Alloy
Louvertac Band — Beryllium Copper
Finish — Silver

Contact Extraction Tool **Part Number** 318851-1
Latch Disengaging Tool **Part Number** 58382-1

- **Recognized under the Component Program of Underwriters Laboratories Inc., File No. E28476**
- **Certified by Canadian Standards Association File No. LR7189**
- **Passed test by VDE under their Registration Number 3980/Continuous Surveillance**

Design Objective — 108-1583

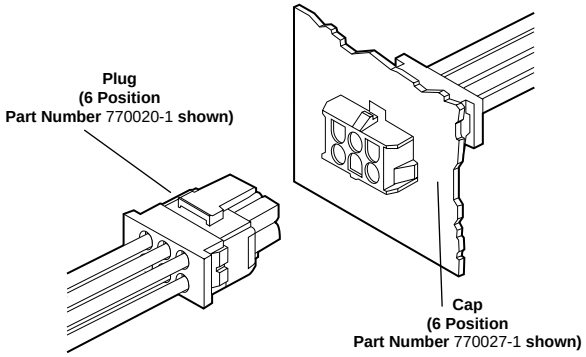

Cable-to-Right-Angle Board Connectors

Material:

Housing — UL 94V-0 Nylon
Contact Body — Copper Alloy
Louvertac Band — Beryllium Copper
Finish — Silver

Technical Documents:

Design Objective — 108-1594

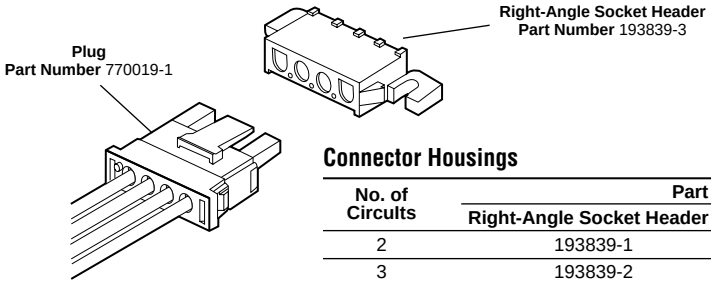

Connector Housings

No. of Circuits	Part Numbers	
	Right-Angle Socket Header	Mates with Housing
2	193839-1	770017-1
3	193839-2	770018-1
4 (shown)	193839-3	770019-1
5	193839-4	770016-1

Notes: 1. High Current contacts with Louvertac bands are not intermateable with any other contact.
2. Additional information on connectors is available in Tyco Electronics High Current Products Catalog No. 65141.

High Current Contacts

High Current Contacts

The Louvertac bands have the versatility of being designed into contact dimensions used in existing AMP connectors.

Universal MATE-N-LOK II High Current contacts have been designed to fit into an existing Universal MATE-N-LOK II housing. An initial T-Rise test of a fully energized 4 circuit connector with 10 gage wires has shown a 31 amp capability per line with a 30°C T-rise.

Contacts

Wire Size AWG	Contact Part Numbers		Crimp Tools
	Pin	Sockets	
10	193796-1	193797-1	Daniels Hand Tool #M310 or Tyco Electronics Part Number 356114-1 Positioner #TP1013 or Tyco Electronics Part Number 356337-1
12-14	193841-1	193842-1	

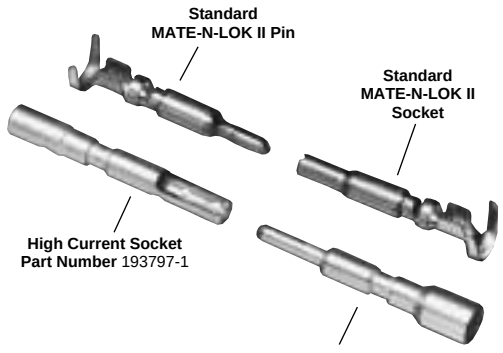

Connector Housings

No. of Circuits	Kit Part Numbers	
	Plug	Cap
2	770017-1	770024-1
3	770018-1	770025-1
4	770019-1	770026-1
5	770016-1	—
6	770020-1	770027-1
9	770021-1	770028-1
12	770022-1	770029-1
15	770023-1	770030-1

For complete product information, order Catalog 82181

High Current Vertical Pin Headers

High Current Universal MATE-N-LOK II Vertical Pin Headers are designed to accept Universal MATE-N-LOK II Plugs with High Current Socket contacts. All housings are polarized in order to allow proper circuit board placement. Eight versions are available from 2 circuits to 15 circuits.

Material:

Housing — UL 94V-0 Nylon
Contacts — Copper Alloy
Finish — Silver over Nickel

- **Recognized under the Component Program of Underwriters Laboratories Inc., File No. E28476**
- **Certified by Canadian Standards Association, File No. LR7189**
- **Passed test by VDE under their Registration Number 3980/Continuous Surveillance**

Technical Documents:

Design Objective — 108-1594

Mating Connectors:

Universal MATE-N-LOK II Plug Housings — page 9013

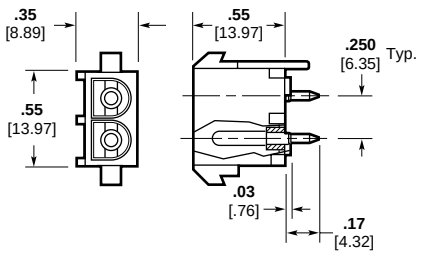

2 Circuit
Part Number 194009-1

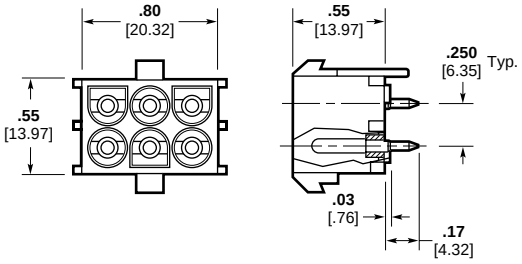

6 Circuit
Part Number 194002-1 **(Bulk Packaging)**
Part Number 194002-3 **(Tube Packaging)**

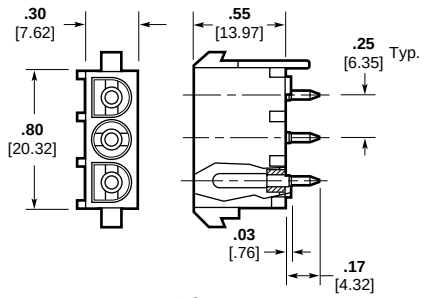

3 Circuit
Part Number 194017-1

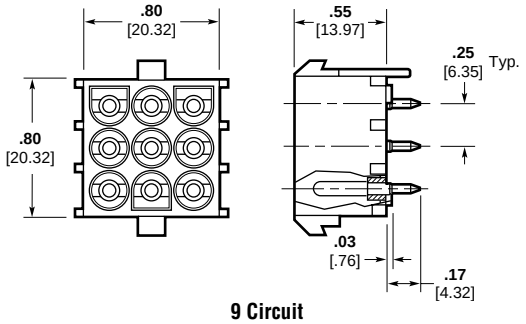

9 Circuit
Part Number 194012-1

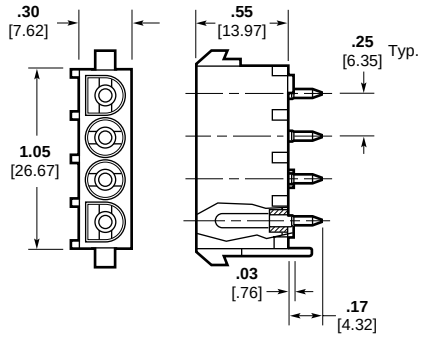

4 Circuit
Part Number 194010-1

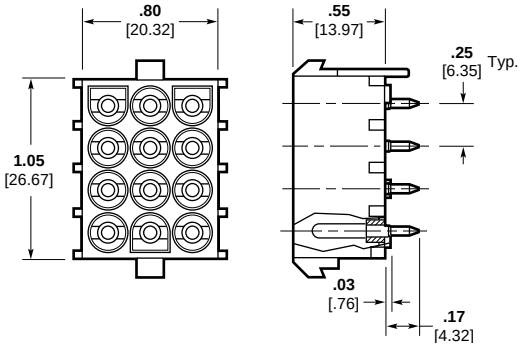

12 Circuit
Part Number 194014-1 **(Individual)**
Part Number 194014-2 **(Tube Packaging)**

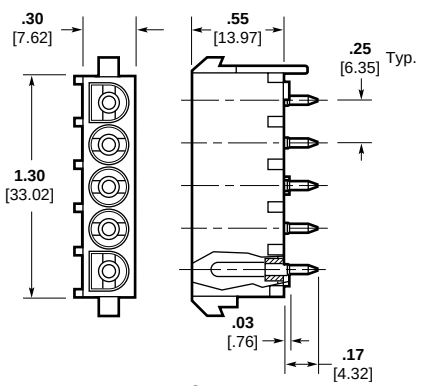

5 Circuit
Part Number 194018-1

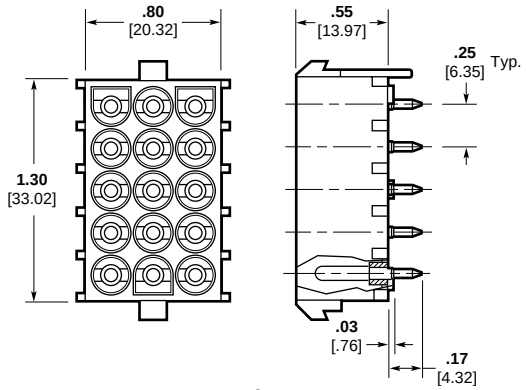

15 Circuit
Part Number 194013-1

Notes: 1. High Current contacts with Louvertac bands are not intermateable with any other contact.
2. Additional information on High Current connectors is available in Tyco Electronics Catalog No. 65141.

For complete product information, order Catalog 82181

Product Facts

- Pins and sockets can be intermixed in the same housing
- Positive polarization
- Rear cavity identification
- Contacts completely enclosed in housings
- Positive locking housings
- Insulation capability to .200 [5.08] diameter
- Removable, crimp snap-in contacts
- Low contact mating force
- Contacts accept 30-10 AWG [.05-5.0 mm²] wire sizes
- Contacts available with pre-tin or gold plating
- Dual locking lances provide optimum contact stability
- Panel mount or free hanging
- Mate with Universal MATE-N-LOK II Housings
- Available in UL 94V-0 flame retardant material. Meets the material requirements of table 25.1 of UL Standard 1410 (television receivers and video products)
- Not for interrupting current
- Harness to PC Board capability using pin or socket headers
- Pin and socket headers are available in both vertical and right-angle style
- Solderability — headers meet MIL-STD 202 Method 208
- Contacts are on .250 [6.35] centerline spacing
- Recognized under the Component Program of Underwriters Laboratories Inc., File No. E28476
- Certified by Canadian Standards Association, File No. LR 7189
- Passed test by VDE under their Registration Number 3980/Continuous Surveillance

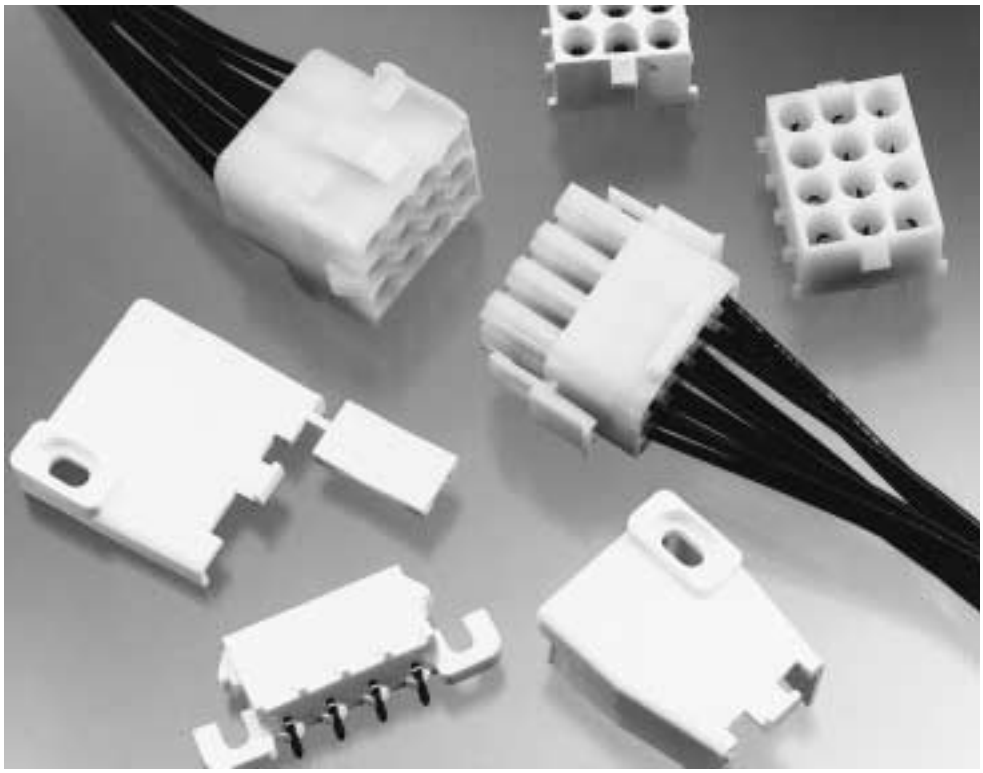

Performance Characteristics:

The Universal MATE-N-LOK Connector performance characteristics found below are based on free hanging and panel mount connectors, loaded with contacts crimped on stranded wire.

Dielectric Withstanding Voltage — 5.0 KVAC or 10.0 KVDC between adjacent circuits

Insulation Resistance — 1000 megohms minimum initial between adjacent circuits

Voltage Rating — 600V AC or DC

Connector Mating —
Solid Pin — 3.0 lb. max. per circuit
Split Pin — 1.5 lb. max. per circuit

Connector Unmating —
Solid Pin—.7 lb. min. per circuit
Solid Pin—.5 lb. min. per circuit

Contact Insertion Force — 5.0 lb. max. per contact

Contact Retention — 15 lb. min. per contact

Durability — 50 cycles, mating and unmating

Universal MATE-N-LOK connectors also will withstand the following tests:

Vibration — 10-55-10 cycles per minute at .06 inch total excursion

Physical Shock — 18 drops, 50 g sawtooth at 10 milliseconds

Housing Panel Retention — 75 lb. min.

Housing Lock Strength — 30 lb. min.

Thermal Shock — -55°C to +85°C

Temperature-Humidity Cycling — 25°C to 65°C at 95% RH

Corrosion — 48 hr. at 5% salt concentration

Technical Documents:

Product Specifications
108-1031 Universal MATE-N-LOK Connectors
108-1053 Universal MATE-N-LOK PC Board Headers

Application Specification
114-1010 Universal MATE-N-LOK Contacts

Instruction Sheet
408-7714 Plug, Cap, Headers, Pin, Socket and Accessories

For complete product information, order Catalog 82181

Universal MATE-N-LOK Connector Mating Combinations

Connector Part Numbers				Mating Connector Part Numbers									
						PC Board Headers							
						Vertical Pin[2]			Vertical Socket[2]			Right-Angle[2]	
Number of Circuits	Flammability Rating	Style	Plug Part Numbers[2]	Cap Part Numbers[2]	Plating	Standard Tail	Standard Tail Polarized	Long Tail	Standard Tail	Standard Tail Polarized	Long Tail	Pin	Socket
1	UL94V-2	—	1-350867-0 1-641084-0[3]	770421-1 1-641083-0[3]	—	—	—	—	—	—	—	—	—
	UL94V-0	—	350865-1	350866-1	—	—	—	—	—	—	—	—	—
2	UL94V-2	In-Line	1-480698-0 1-770113-0[3]	1-480699-0 1-770114-0[3]	Pre-tin	350428-1	641963-1	350582-1	350759-4	643411-1	350986-4	—	—
					Duplex[1]	350428-2	641963-2	350582-2	350759-3	—	—	—	—
	UL94V-0	In-Line	350777-1	350778-1	Pre-tin	350786-1	641964-1 1-641964-1[4]	350787-1	350824-1	643412-1	350831-1	1-350942-0	643226-1
					Duplex[1]	350786-2	641964-2	350787-2	350824-2	—	—	2-350942-0	—
3	UL94V-2	In-Line	1-480700-0 1-641771-0[3]	1-480701-0 1-641767-0[3]	Pre-tin	350429-1	641965-1	350583-1	350760-4	643413-1	350987-4	—	—
					Duplex[1]	350429-2	—	350583-2	350760-3	—	—	—	—
	UL94V-0	In-Line	350766-1	350767-1	Pre-tin	350789-1	641966-1 1-641966-1[4]	350790-1	350825-1	643414-1	350832-1	1-350943-0	643228-1
					Duplex[1]	350789-2	—	350790-2	350825-2	643414-2	350832-2	2-350943-0	—
4	UL94V-2	In-Line	1-480702-0 770208-1[3]	1-480703-0 770209-1[3]	Pre-tin	350430-1	641967-1	350584-1	350761-4	643415-1	350988-4	1-350948-0	—
					Duplex[1]	350430-2	—	350584-2	350761-3	—	350988-3	—	—
	UL94V-0	In-Line	350779-1	350780-1	Pre-tin	350792-1	641968-1	350793-1	350826-1	643416-1	350833-1	1-350944-0	643230-1
					Duplex[1]	350792-2	—	350793-2	350826-2	—	350833-2	2-350944-0	643230-2
5	UL94V-2	In-Line	1-480763-0	1-480764-0	Pre-tin	640466-1	643405-1	—	640467-1	—	—	1-350949-0	—
					Duplex[1]	640466-2	—	—	640467-2	—	—	—	—
	UL94V-0	In-Line	350809-1	350810-1	Pre-tin	640900-1	643406-1	—	640901-1	—	—	1-350945-0	643232-1
					Duplex[1]	640900-2	—	—	640901-2	—	—	2-350945-0	643232-2
6	UL94V-2	In-Line	640585-1	926307-1	Pre-tin	641832-1	643407-1	—	—	—	—	640587-1	—
					Duplex[1]	—	—	—	—	—	—	—	—
	UL94V-0	In-Line	640581-1	926307-3	Pre-tin	641831-1	643408-1	—	—	—	—	640583-1	643234-1
					Duplex[1]	—	—	—	770262-2	—	—	640583-2	643234-2
	UL94V-2	Matrix	1-480704-0 1-641770-0[3] 794096-1[5]	1-480705-0 1-641766-0[3]	Pre-tin	350431-1	641969-1	350585-1	350762-4	643423-1	350989-4	—	—
					Duplex[1]	350431-2	—	350585-2	350762-3	—	350989-3	—	—
	UL94V-0	Matrix	350715-1	350781-1	Pre-tin	350711-1	641970-1	350732-1	350827-1	643424-1	350834-1	—	—
					Duplex[1]	350711-2	641970-2	350732-2	350827-2	643424-2	350834-2	—	—
8	UL94V-2	In-Line	640586-1	926308-1	Pre-tin	641825-1	—	770143-1	—	—	—	—	—
					Duplex[1]	—	—	—	—	—	—	—	—
	UL94V-0	In-Line	640582-1	926308-3	Pre-tin	641828-1	643410-1	—	—	—	—	640584-1	643326-1
					Duplex[1]	—	—	—	—	—	—	640584-2	643326-2
9	UL94V-2	Matrix	1-480706-0 1-641769-0[3]	1-480707-0 1-641765-0[3]	Pre-tin	350432-1	641971-1	350586-1	350763-4	643425-1	350990-4	—	—
					Duplex[1]	350432-2	641971-2	350586-2	350763-3	—	350990-3	—	—
	UL94V-0	Matrix	350720-1	350782-1	Pre-tin	350712-1	641972-1 1-641972-1[4]	350742-1	350828-1	643426-1	350835-1	—	—
					Duplex[1]	350712-2	641972-2	350742-2	350828-2	643426-2	350835-2	—	—
10	UL94V-2	In-Line	926302-1	926309-1	Pre-tin	—	—	—	—	—	—	—	—
					Duplex[1]	—	—	—	—	—	—	—	—
	UL94V-0	In-Line	926302-3	926309-3	Pre-tin	—	—	—	—	—	—	—	—
					Duplex[1]	—	—	—	—	—	—	—	—
12	UL94V-2	Matrix	1-480708-0 1-641768-0[3]	1-480709-0 641764-1[3]	Pre-tin	350433-1	641973-1	350587-1	350764-4	—	350991-4	—	—
					Duplex[1]	350433-2	—	350587-2	350764-3	—	350991-3	—	—
	UL94V-0	Matrix	350735-1	350783-1	Pre-tin	350713-1	641974-1 1-641974-1[4]	350737-1	350829-1	643428-1	350836-1	—	—
					Duplex[1]	350713-2	641974-2	350737-2	350829-2	—	350836-2	—	—
15	UL94V-2	Matrix	1-480710-0	1-480711-0	Pre-tin	350434-1	641975-1	350588-1	350765-4	643429-1	350992-4	—	—
					Duplex[1]	350434-2	—	350588-2	350765-3	—	—	—	—
	UL94V-0	Matrix	350736-1	350784-1	Pre-tin	350714-1	641976-1	350738-1	350830-1	643430-1	350837-1	—	—
					Duplex[1]	350714-2	—	350738-2	350830-2	—	350837-2	—	—

[1] Duplex Finish — Plated with .000030 [.000762] min. gold in mating area, matte tin-lead on solder tail end over .000050 [.00127] min. nickel underplate on entire contact.
[2] Universal MATE-N-LOK Plug and Cap housings accept pin or socket contacts. Use the appropriate contacts in the Plug housing as required by the mating component.
[3] Housing material has 125°C temperature rating. Lime green color. 12 Circuit cap black color.
[4] Black in color.
[5] Tool Removable

For complete product information, order Catalog 82181

Products for Industrial & Commercial Applications
Dimensions are shown for reference purposes only.
Dimensions are in inches and millimeters unless otherwise specified. Values in brackets are metric equivalents.
Specifications subject to change.
Technical Support Center
1-800-522-6752
www.tycoelectronics.com

Contacts

Product Specifications:

Solid pin diameter—.084 [2.13]
Split pin diameter—.086 [2.18]
Stock thickness—.012 [.305] unless otherwise noted.

These contacts can be used in either Universal MATE-N-LOK Plug or Cap housings only.

Related Product Data:

Performance Characteristics— page 9015
Application Tooling— pages 9081 thru 9083
Housings— page 9019

Technical Documents: page 9080

Product Specification
108-1031 Universal MATE-N-LOK Connectors

Application Specification
114-1010 Universal MATE-N-LOK Contacts

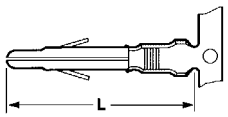

Pin

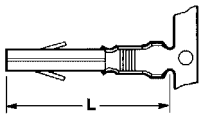

Socket

Wire Size Range AWG [mm²]	Ins. Dia. Range	L Dim. Pin	L Dim. Socket	Material & Finish	Contact Part Numbers Pin Strip Form	Pin Loose Form	Socket Strip Form	Socket Loose Form	HDM Applicator Part Numbers	Hand Tool Part Numbers
30-26 [.05-.12]	**.032-.057** .813-1.45	**.790** 20.06	**.760** 19.30	Brass, Pre-tin	350924-1	770672-1	350925-1	770673-1	466616-2[6] 466616-3[6]	58439-1
				Phos. Brz., Gold[2]	350924-6	770672-6	350925-6	—		
24-18 [.2-.8]	**.040-.100** 1.02-2.54	**.790** 20.06	**.760** 19.30	Brass, Pre-tin	350561-1	350690-1	350851-1 / 350570-1[1]	350689-1[1]	466320-1[6] 466320-2[6] 466320-4[6]	90300-2
				Brass, Gold[2]	350561-2	350690-2	350851-2 / 350570-2[1]	640347-2 / 350689-2[1]		
				Brass, Select Gold[3]	350561-7	350690-7	350851-7 / 350570-7[1]	350689-7[1]		
				Phos. Brz., Pre-tin	350561-3	350690-3	350570-3[1]	350689-3[1]		
				Phos. Brz., Select Gold[3]	—	—	350570-6[1]	—		
20-14 [.5-2.0]	**.060-.130** 1.52-3.30	**.790** 20.06	**.760** 19.30	Brass, Pre-tin	350218-1	350547-1	350536-1	350550-1	687763-1[6] 687763-2[6] 687763-6[6]	90296-2
				Brass, Gold[2]	350218-2	350547-2	350536-2	350550-2		
				Brass, Select Gold[3]	350218-7	350547-7	350536-7	350550-7		
				Phos. Brz., Pre-tin	350218-3	350547-3	350536-3	350550-3		
				Phos. Brz., Select Gold[3]	350218-6	350547-6	350536-6	350550-6		
20-14 [.5-2.0]	**.130-.200** 3.30-5.08	**.810** 20.57	**.780** 19.81	Brass, Pre-tin	350538-1	350552-1	350537-1	350551-1	687926-1[6] 687926-2[6] 687926-6[6]	90298-2[7] 90299-2[7]
				Brass, Gold[2]	350538-2	350552-2	350537-2	350551-2		
				Brass, Select Gold[3]	350538-7	350552-7	350537-7	350551-7		
				Phos. Brz., Pre-tin	350538-3	350552-3	350537-3	350551-3		
				Phos. Brz., Select Gold[3]	350538-6	350552-6	350537-6	350551-6		
18-14[4] [.8-2.0]	**.130-.200** 3.30-5.08	**.810** 20.57	**.780** 19.81	Brass, Pre-tin	350873-1	—	350874-1	—	466588-1[6] 466588-2[6] 466588-3[6]	90298-2[7] 90299-2[7]
				Phos. Brz., Pre-tin	350873-3	350918-3	350874-3	350919-3		
12-10 [3.0-5.0]	**.200 max.**[5] 5.08	**.810** 20.57	**.780** 19.81	Phos. Brz., Pre-tin	350922-3	640309-3	350923-3	640310-3	466597-1[6] 466597-2[6] 466597-3[6]	69710-1[7]
				Phos. Brz., Select Gold[3]	350922-6	640309-6	350923-6	640310-6		
				Phos. Brz., Gold[2]	350922-4	—	350923-4	—		

[1] Socket Contact — .010 [.254] stock thickness
[2] Gold Finish — Plated with .000030 [.000762] min. gold in mating area and inside wire barrel over .000050 [.00127] min. nickel underplate on entire contact.
[3] Select Gold Finish — Plated with .000030 [.000762] min. gold in mating area over .000050 [.00127] min. nickel underplate on entire contact.
[4] Recommended for predominant use of 14 AWG wire.
[5] There is no insulation barrel on this contact. Insulation maximum diameter is limited by the housing.
[6] HDM Applicator part number ending in -1 is used on AMPOMATOR CLS Machine with T or G Terminators, -2 is used on AMP-O-LECTRIC Model K Machine, -3, -4 & -6 are used on AMP-O-LECTRIC Model G Machine. See page 9083 for further information.
[7] Hand Tool No. **90298-2** is for wire size 20-18 AWG: Hand Tool No. **90299-2** is for wire size 16-14 AWG. Hand Tool No. **69710-1** uses die set No. **58380-1** for 12 AWG and No. **58380-2** for 10 AWG.
Note: Phosphor bronze material contacts should be used in high temperature/humidity cycling applications.


Contact Extraction Tool
Part Number 318851-1
IS 408-4371


Contact Insertion Tool
(For inserting contacts applied to small diameter wire)
Part Number 91002-1
IS 408-7347

For complete product information, order Catalog 82181

Contacts

Split Pins

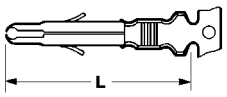

Wire Size Range AWG [mm²]	Ins. Dia. Range	L Dim.	Material & Finish	Contact Part Numbers		HDM Applicator Part Numbers	Hand Tool Part Numbers
				Strip Form	Loose Form		
24-18 [.2-.8]	**.040-.100** 1.02-2.54	**.790** 20.06	Brass, Pre-tin	350699-1	350706-1	466320-1[3] 466320-2[3] 466320-4[3]	90300-2
			Brass, Gold[1]	350699-2	350706-2		
			Brass, Select Gold[2]	350699-7	350706-7		
20-14 [.5-2.0]	**.060-.130** 1.52-3.30	**.790** 20.06	Brass, Pre-tin	350687-1	350705-1	687763-1[3] 687763-2[3] 687763-6[3]	90296-2
			Brass, Gold[1]	350687-2	350705-2		
			Brass, Select Gold[2]	350687-7	350705-7		
20-14 [.5-2.0]	**.130-.200** 3.30-5.08	**.810** 20.57	Brass, Pre-tin	350700-1	350707-1	687926-1[3] 687926-2[3] 687926-6[3]	90298-2[4] 90299-2[4]
			Brass, Gold[1]	350700-2	350707-2		
			Brass, Select Gold[2]	350700-7	350707-7		

[1] Gold Finish — Plated with .000030 [.000762] min. gold in mating area and inside wire barrel over .000050 [.00127] min. nickel underplate on entire contact.
[2] Select Gold Finish — Plated with .000030 [.000762] min. gold in mating area over .000050 [.00127] min. nickel underplate on entire contact.
[3] HDM Applicator part number ending in -1, is used on AMPOMATOR CLS Machine with T or G Terminators, -2 is used on AMP-O-LECTRIC Model K Machine, -4 & -6 are used on AMP-O-LECTRIC Model G Machine. See page 9083 for further information.
[4] Hand Tool No. **90298-2** for wire size 20-18 AWG. Hand Tool No. **90299-2** for wire size 16-14 AWG.

Notes: 1. Tyco Electronics recommends split pins be used in housings having 6, 9, 12 and 15 circuits to reduce mating force.
2. Phosphor bronze material contacts are available for use in high temperature/humidity cycling applications, consult Tyco Electronics.

Product Specifications:

Solid pin diameter—.084 [2.13]
Split pin diameter—.086 [2.18]
Stock thickness—.012 [.305]

These contacts can be used in either Universal MATE-N-LOK Plug or Cap housings only.

Related Product Data:

Performance Characteristics — page 9015
Application Tooling — pages 9081 thru 9083
Housings— page 9019

Technical Documents: pages 9015 and 9080

Product Specification
108-1031 Universal MATE-N-LOK Connectors

Application Specification
114-1010 Universal MATE-N-LOK Contacts

Programmable Connector Contact

(Socket with 110 Series Special FASTON Tab)

Material and Finish:

Brass, pre-tin

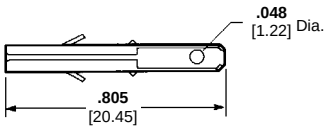

Part Number
350877-1

Note: This contact will accept a 110 Series FASTON Receptacle — Part Number **350871-1** (strip form) allows simple field wiring or wiring changes.

For complete product information, order Catalog 82181

Housings, Free Hanging or Panel Mount

Product Specification:

Centerline spacing—.250 [6.35]

2, 3, 4, 5, 6, 8 and 10 Circuit, In-Line

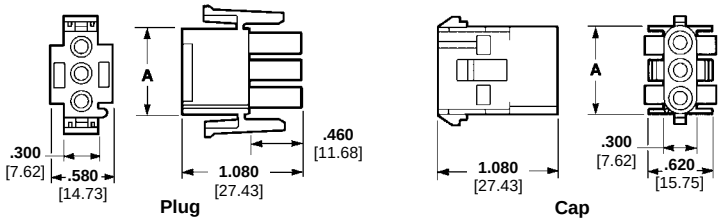

1 Circuit, Free Hanging

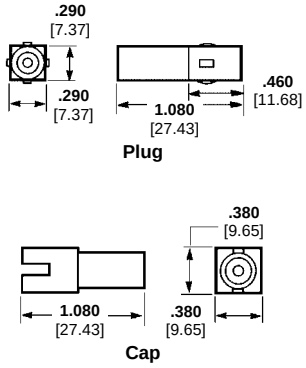

6 Circuit, Matrix

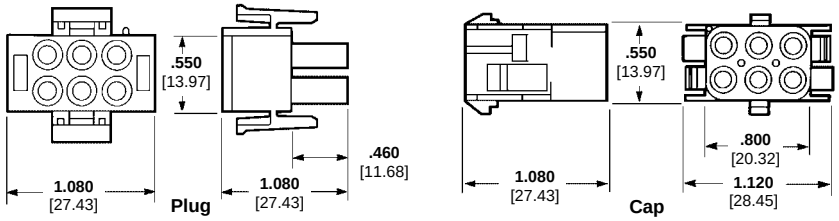

9, 12 and 15 Circuit, Matrix

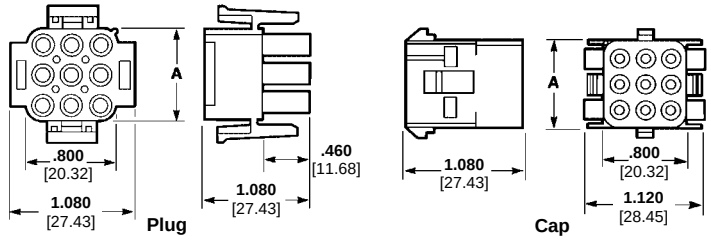

Related Product Data:

Performance Characteristics— page 9015

Contacts— pages 9017 and 9018

Panel Cutout Recommendations— page 9020

Keying Plug— page 9020

Strain Reliefs— pages 9020 and 9021

Mating Headers— pages 9025 thru 9028

Technical Documents: pages 9015 and 9080

Product Specification
108-1031 Universal MATE-N-LOK Connectors

Other Mating Connectors:

Universal MATE-N-LOK II Housings— pages 9006 thru 9008

Number of Circuits	A Dim.	Housing Part Numbers			
		UL94V-2 Nylon, Natural Color[2]		UL94V-0 Nylon[3]	
		Plug	Cap	Plug	Cap
1	—	1-350867-0	770421-1	350865-1	350866-1
2	**.550** 13.97	1-480698-0[1]	1-480699-0[1]	350777-1[1]	350778-1[1]
3	**.800** 20.32	1-480700-0[1]	1-480701-0[1]	350766-1[1]	350767-1[1]
4	**1.050** 26.67	1-480702-0[1]	1-480703-0[1]	350779-1[1]	350780-1[1]
5	**1.300** 33.02	1-480763-0[1]	1-480764-0[1]	350809-1[1]	350810-1[1]
6	**1.550** 39.37	640585-1[1]	926307-1[1]	640581-1[1]	926307-3[1]
	—	1-480704-0[1] 794096-1[4]	1-480705-0	350715-1	350781-1
8	**2.050** 52.07	640586-1[1]	926308-1[1]	640582-1[1]	926308-3[1]
9	**.800** 20.32	1-480706-0	1-480707-0	350720-1	350782-1
10	**2.550** 64.77	926302-1[1]	926309-1[1]	926302-3[1]	926309-3[1]
12	**1.050** 26.67	1-480708-0	1-480709-0	350735-1	350783-1
15	**1.300** 33.02	1-480710-0	1-480711-0	350736-1	350784-1

[1] In-Line style.
[2] Housing material has 125°C temperature rating.
[3] Housing material has 120°C temperature rating.
[4] Tool Removable.

For complete product information, order Catalog 82181

Products for Industrial & Commercial Applications
Dimensions are shown for reference purposes only.
Dimensions are in inches and millimeters unless otherwise specified. Values in brackets are metric equivalents.
Specifications subject to change.
Technical Support Center
1-800-522-6752
www.tycoelectronics.com

Recommended Cap Housing Panel Cutout

View is from cap entry side

Refer to Application Specification 114-1010

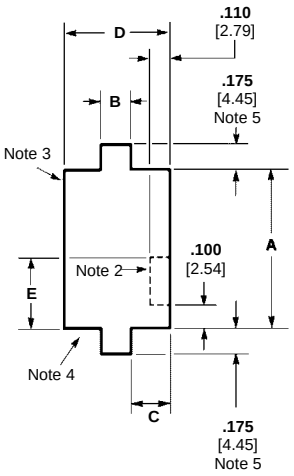

Style	Number of Circuits	Dimensions				
		A	B	C	D	E
In-Line	2	**.565** 14.35	**.340** 8.64	**.095** 2.41	**.530** 13.46	**.250** 6.35
	3	**.815** 20.70	**.340** 8.64	**.095** 2.41	**.530** 13.46	**.250** 6.35
	4	**1.065** 27.05	**.340** 8.64	**.095** 2.41	**.530** 13.46	**.250** 6.35
	5	**1.315** 33.40	**.340** 8.64	**.095** 2.41	**.530** 13.46	**.250** 6.35
	6	**1.567** 39.80	**.154** 3.91	**.189** 4.80	**.531** 13.49	**.394** 10.0
	8	**2.067** 52.50	**.154** 3.91	**.189** 4.80	**.531** 13.49	**.394** 10.0
	10	**2.567** 65.20	**.154** 3.91	**.189** 4.80	**.530** 13.46	**.394** 10.0
Matrix	6	**.565** 14.35	**.480** 12.19	**.275** 6.99	**1.030** 26.16	**.250** 6.35
	9	**.815** 20.70	**.480** 12.19	**.275** 6.99	**1.030** 26.16	**.250** 6.35
	12	**1.065** 27.05	**.480** 12.19	**.275** 6.99	**1.030** 26.16	**.350** 8.89
	15	**1.315** 33.40	**.480** 12.19	**.275** 6.99	**1.030** 26.16	**.350** 8.89

Notes:
1. Recommended panel thickness — .030-.090 [.762-2.286]. Panel must be punched so that housing enters panel in same direction as the punch.
2. Optional — Do not remove this material when keying cap housing to panel.
3. Circuit #1 location when using panel keying with 6, 9, 12 and 15 circuit Matrix housings.
4. Circuit #1 location when using panel keying with 2, 3, 4, 5, 6, 8 and 10 circuit In-Line housings.
5. .175 [4.45] dimension is .125 [3.18] for 6, 8 and 10 circuit In-Line housings.

Keying Plug

IS 408-3320

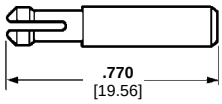

Part Numbers
UL94V-2 Nylon material, natural color — 1-640415-1
UL94V-0 Nylon material — 1-640415-0
Note: Keying plug snaps into plug or cap housing

Plug Housing Strain Reliefs

IS 408-3320

Related Product Data:

Plug Housings — page 9019

Technical Documents: pages 9015 and 9080

2, 3, 4, 5, 6 and 8 Circuit, In-Line

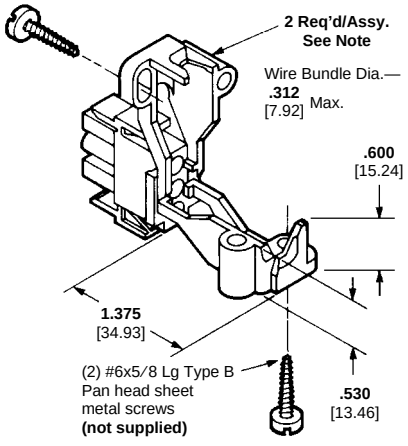

Part Numbers
UL94V-2 Nylon material, natural color — 1-350589-0
UL94V-0 Nylon material — 350811-1

6, 9, 12 and 15 Circuit, Matrix

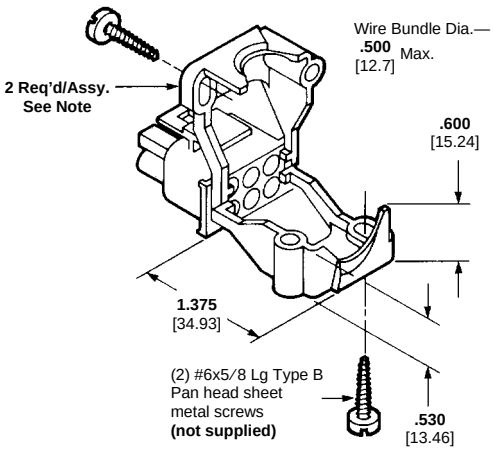

Part Numbers
UL94V-2 Nylon material, natural color — 1-350590-0
UL94V-0 Nylon material — 350812-1

Note: Strain relief part number represents one half of a strain relief. Two strain reliefs required per housing.

For complete product information, order Catalog 82181

Plug or Cap Housing Strain Reliefs

IS 408-3320

Related Product Data:

Housings— page 9019

Technical Documents: pages 9015 and 9080

Cap Housing Adapters are designed to anchor the cap housing strain reliefs to the housings and prevent the strain relief halves from "drawing in" when the screws are being torqued down to clamp the cable.

IS 408-3320

For All Positions Except 2, 6 and 8 Circuit Cap Housings

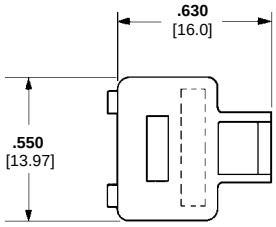

UL94V-2 Nylon material, natural color—**641777-1**

UL94V-0 Nylon material—**641778-1**

For In-Line 2 and Matrix 6 Circuit Cap Housings Only

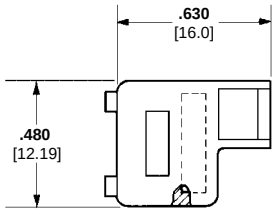

UL94V-2 Nylon material, natural color—**643182-1**
UL94V-0 Nylon material—**643182-2**

For complete product information, order Catalog 82181

2, 3, 4, 5, 6, 8, 9, 12 and 15 Circuit (Enclosed)

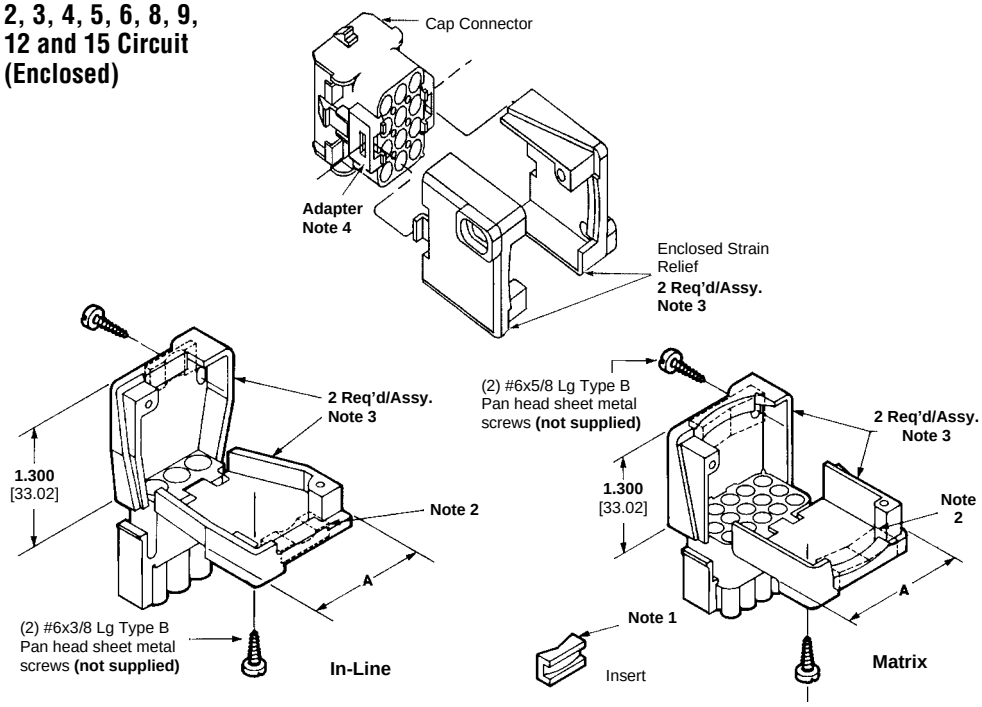

Style	Number of Circuits	A Dim.	Insert Supplied	Single Wire Dia. Range	Wire Bundle Dia. Range	Part Numbers: UL94V-2 Nylon, Natural Color	Part Numbers: UL94V-0 Nylon
In-Line	2	**.960** 24.38	Yes	**.040-.190** 1.02-4.83	—	1-640719-0	640713-1
			No	—	**.200-.350** 5.08-8.89	1-640719-1	640713-2
	3	**1.140** 28.96	Yes	**.040-.190** 1.02-4.83	—	1-640720-0	640714-1
			No	—	**.200-.350** 5.08-8.89	641763-1	641945-1
	4	**1.325** 33.65	Yes	**.040-.190** 1.02-4.83	—	641775-1	641776-1
			No	—	**.200-.350** 5.08-8.89	641775-2	641776-2
	5	**1.530** 38.86	Yes	**.040-.190** 1.02-4.83	—	643030-3	643030-1
			No	—	**.200-.350** 5.08-8.89	643030-2	643030-4
	6 Note 5	**1.780** 45.21	Yes	**.040-.190** 1.02-4.83	—	643585-1	643313-1
			No	—	**.200-.350** 5.08-8.89	643585-2	643313-2
	8 Note 5	**2.280** 56.08	Yes	**.040-.190** 1.02-4.83	—	—	643314-1
			No	—	**.200-.350** 5.08-8.89	—	643314-2
Matrix	6	**1.030** 26.16	Yes	—	**.120-.650** 3.05-16.51	1-640721-0	640715-1
	9	**1.030** 26.16	Yes	—	**.120-.650** 3.05-16.51	1-640722-0	640716-1
	12	**1.280** 32.51	Yes	—	**.150-.750** 3.81-19.05	1-640723-0	640717-1
	15	**1.530** 38.86	Yes	—	**.200-.850** 5.08-21.59	1-640724-0	640718-1

Notes: 1. Cable clamping insert comes attached to strain relief. It can be used to provide additional adjustment for small wire bundles or discarded.
2. Insert to be positioned as shown by dotted lines.
3. Strain relief part number represents one-half of a strain relief. Two strain reliefs required per housing.
4. Must use cap housing adapters when attaching strain reliefs to a cap housing. **Two adapters required per housing.**
5. Strain reliefs for 6 and 8 position In-Line fits plug housings only.

Flanged Cap Housings with Twist and Lock Feature

Product Facts

- **Available in a 6, 9, and 12 circuit design**
- **Designed for household appliances where a bulkhead connector system is needed in conjunction with foam-in insulation**
- **Mates with standard Universal MATE-N-LOK plug housings**
- **Accepts Universal MATE-N-LOK pin and socket contacts**
- **Designed to utilize the Splash Proof/Sealed Universal MATE-N-LOK seals for additional sealing protection**



Photo 110793-2

Material and Finish:

Housing—Nylon, UL 94V-0 or UL 94V-2 rated
Contacts—Phosphor Bronze or Brass
Plating—Pre-tin or Gold

Related Product Data:

Contacts—Page 9024

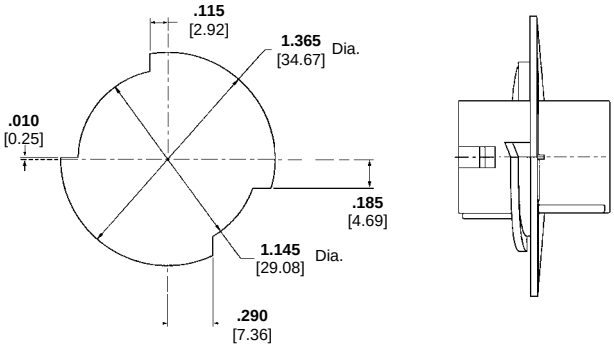

Recommended Panel Cutout (for 6 and 9 Pos. Housings)

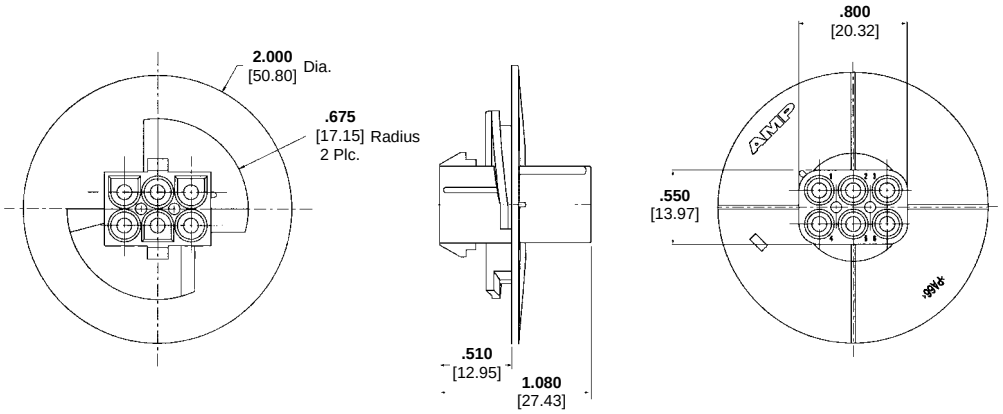

Notes:
1. Recommended Panel Thickness: 0.76-2.29 [.030-.090]
2. Panel must be punched so that the housing enters the panel in the same direction as the punch.
3. Asymmetrical panel cutout provides polarization for Pin 1 location.

Number of Circuits	Housing Part Numbers	
	UL 94V-0	UL 94V-2
6	794760-1	794714-1
9	794761-1	794715-1
12	794762-1	794716-1

For complete product information, order Catalog 82181

Products for Industrial & Commercial Applications
Dimensions are shown for reference purposes only.
Dimensions are in inches and millimeters unless otherwise specified. Values in brackets are metric equivalents.
Specifications subject to change.
Technical Support Center
1-800-522-6752
www.tycoelectronics.com

Connector Seals

Product Facts

- **Economical splash proof/ immersible sealed connector system**
- **No design changes to existing Universal MATE-N-LOK housings**
- **Existing applications utilizing Universal MATE-N-LOK Connectors can be upgraded to a splash proof system**
- **Utilizes two wire seals and one interface seal**
- **Wire range is 20-14 AWG [.5-2.0 mm²] with insulation diameter range .060-.130 [1.52-3.30]**
- **.110-.130 [2.79-3.30] insulation diameter passed European IP sealing level #5/7 (swirling dust/immersion to 1 meter for 30 minutes)**
- **.060-.110 [1.52-2.79] insulation diameter passed European IP sealing level #5/6 (swirling dust/heavy seas)**
- **Universal MATE-N-LOK II keying plug can be used to seal unused circuits**
- **Primary application is for wire-to-wire, wire-to-board application must use a closed bottom header**

Material:
Silicone rubber, blue color

Related Product Data:

Contacts — page 9024
Housings — page 9019

Technical Documents:

Product Specification
108-1031-1 Splash Proof Seal, Universal MATE-N-LOK Connectors

Instruction Sheet
408-3392 Universal MATE-N-LOK Splash Proof Seals

****For proper use of this product, customer should make sure that the Instruction Sheet 408-3392 is available for review.**

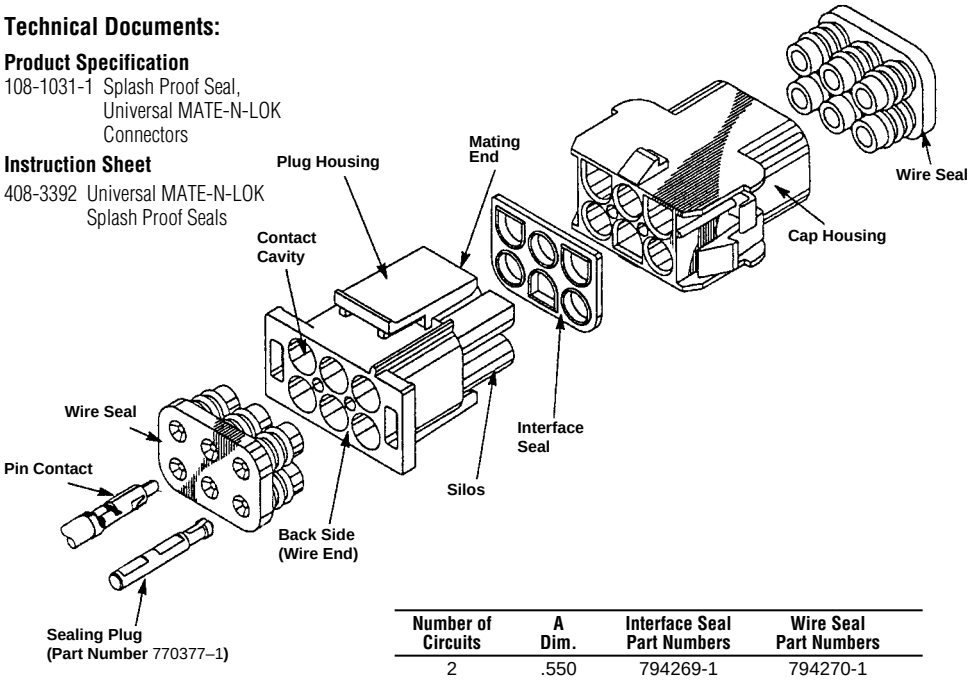

Number of Circuits	A Dim.	Interface Seal Part Numbers	Wire Seal Part Numbers
2	.550	794269-1	794270-1
3	.800	794271-1	794272-1
4	1.050	794273-1	794274-1
6	—	794275-1	794276-1
9	.800	794277-1	794278-1
12	1.050	794279-1	794280-1
15	1.300	794281-1	794282-1

Note: One interface seal and two wire seals required per mated assembly.

2, 3, 4 Circuit, In-Line

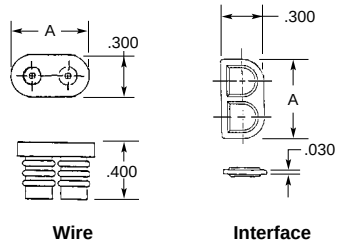

6 Circuit, Matrix

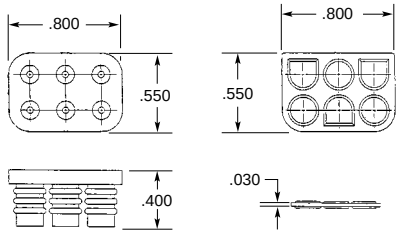

9, 12, and 15 Circuit, Matrix

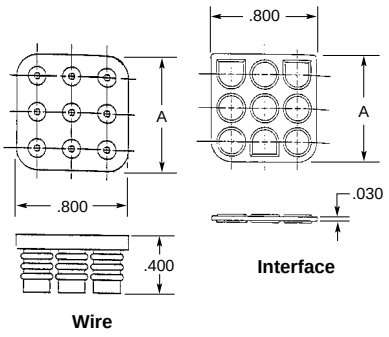

For complete product information, order Catalog 82181

Contacts Used with Splash Proof Seals

Product Specifications:

Solid pin diameter—.084 [2.13]
Split pin diameter—.086 [2.18]
Stock thickness—.012 [.305] unless otherwise noted.

These contacts can be used in either Universal MATE-N-LOK Plug or Cap housings only.

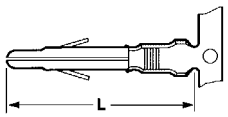

Solid Pin

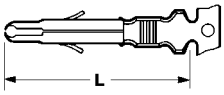

Split Pin

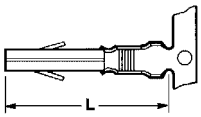

Solid Socket

Related Product Data:

Performance Characteristics— page 9015
Application Tooling— pages 9081 thru 9083
Housings— page 9019 and 9022
Technical Documents: pages 9015 and 9080

Product Specification
108-1031 Universal MATE-N-LOK Connectors

Application Specification
114-1010 Universal MATE-N-LOK Contacts

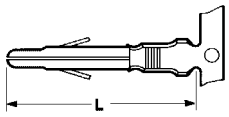

Grounding Pin
(.100 [2.54] longer than standard pin)
(Mate first, break last, not for interrupting current)

Wire Size Range AWG [mm²]	Ins. Dia. Range	L Dim. Pin	L Dim. Socket	Material & Finish	Style	Contact Part Numbers Pin Strip Form	Contact Part Numbers Pin Loose Form	Contact Part Numbers Socket Strip Form	Contact Part Numbers Socket Loose Form	HDM Applicator Part Numbers	Hand Tool Part Numbers
20-14 [.5-2.0]	.060-.130 1.52-3.30	.790 20.06	.760 19.30	Brass, Pre-tin	Solid	350218-1	350547-1	350536-1	350550-1	687763-1[3] 687763-2[3] 687763-6[3]	90296-2
				Brass, Gold[1]		350218-2	350547-2	350536-2	350550-2		
				Brass, Select Gold[2]		350218-7	350547-7	350536-7	350550-7		
				Phos. Brz., Pre-tin		350218-3	350547-3	350536-3	350550-3		
				Phos. Brz., Select Gold[2]		350218-6	350547-6	350536-6	350550-6		
				Brass, Pre-tin	Split	350687-1	350705-1	—	—		
				Brass, Gold[1]		350687-2	350705-2	—	—		
				Brass, Select Gold[2]		350687-7	350705-7	—	—		
		.890 22.60	—	Brass, Pre-Tin	Ground	350654-1	350669-1	—	—		

[1] Gold Finish — Plated with .000030 [.000762] min. gold in mating area and inside wire barrel over .000050 [.00127] min. nickel underplate on entire contact.
[2] Select Gold Finish — Plated with .000030 [.000762] min. gold in mating area over .000050 [.00127] min. nickel underplate on entire contact.
[3] HDM Applicator part number ending in -1, is used on AMPOMATOR CLS Machine with T or G Terminators, -2 is used on AMP-O-LECTRIC Model K Machine, -4 & -6 are used on AMP-O-LECTRIC Model G Machine. See page 9083 for further information.

Notes: 1. Tyco Electronics recommends split pins be used in housings having 6, 9, 12 and 15 circuits to reduce mating force.
2. Phosphor bronze material contacts are available for use in high temperature/humidity cycling applications, consult Tyco Electronics Corporation.
3. 18-24 AWG contacts page 9017 can be used with splash proof seals if insulation diameter range is .060-.100.

UMNL II Keying Plug/Splash Proof Sealing Plug

IS 408-3392

Related Product Data:

Housings— pgs. 9006-9008

Technical Documents: pg. 9015 and 9080

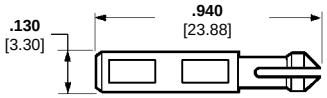

Part Number
UL94V-0 Nylon material — 770377-1



Seal Latch Tool
Part Number 794381-1
IS 408-3392


Contact Extraction Tool
Part Number 318851-1
IS 408-4371


Contact Insertion Tool (For inserting contacts applied to small diameter wire)
Part Number 91002-1
IS 408-7347

For complete product information, order Catalog 82181

Products for Industrial & Commercial Applications
Dimensions are shown for reference purposes only.
Dimensions are in inches and millimeters unless otherwise specified. Values in brackets are metric equivalents.
Specifications subject to change.
Technical Support Center
1-800-522-6752
www.tycoelectronics.com

PC Board Vertical Pin Headers

Product Specification:

Centerline spacing—.250 [6.35]

Material:

Housing—UL94V-2 Nylon, natural color, UL94V-0 Nylon

Contacts—Phosphor bronze
Solder tail diameter .062 [1.57]

Related Product Data:

Performance Characteristics—page 9015

Technical Documents: pages 9015 and 9080

Product Specification
108-1053 Universal MATE-N-LOK PC Board Headers

Mating Connectors:

Universal MATE-N-LOK
Plug Housings— page 9019

Universal MATE-N-LOK II
Plug Housings— pages 9006 thru 9008

2, 3, 4, 5, 6 and 8 Circuit, In-Line

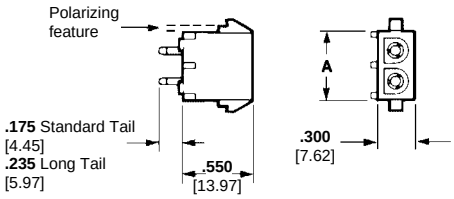

Number of Circuits	A Dim.	Flammability Rating	Pin Finish	Pin Header Part Numbers: Standard Tail[2]	Pin Header Part Numbers: Standard Tail Polarized[2]	Pin Header Part Numbers: Long Tail[3]	Mates with Plug Housing Part Numbers (Using Socket Contacts): UMNL	Mates with Plug Housing Part Numbers (Using Socket Contacts): UMNL II
2	.550 13.97	UL94V-2	Pre-tin	350428-1	641963-1	350582-1	1-480698-0	—
			Duplex[1]	350428-2	641963-2	350582-2		
		UL94V-0	Pre-tin	350786-1	641964-1 1-641964-1[4]	350787-1	350777-1	770017-1
			Duplex[1]	350786-2	641964-2	350787-2		
3	.800 20.32	UL94V-2	Pre-tin	350429-1	641965-1	350583-1	1-480700-0	—
			Duplex[1]	350429-2	—	350583-2		
		UL94V-0	Pre-tin	350789-1	641966-1 1-641966-1[4]	350790-1	350766-1	770018-1
			Duplex[1]	350789-2	—	350790-2		
4	1.050 26.67	UL94V-2	Pre-tin	350430-1	641967-1	350584-1	1-480702-0	—
			Pre-tin	770351-1[5]	—	—		
			Duplex[1]	350430-2	—	350584-2		
		UL94V-0	Pre-tin	350792-1	641968-1	350793-1	350779-1	770019-1
			Duplex[1]	350792-2	—	350793-2		
5	1.300 33.02	UL94V-2	Pre-tin	640466-1	643405-1	—	1-480763-0	—
			Duplex[1]	640466-2	—	—		
		UL94V-0	Pre-tin	640900-1	643406-1	—	350809-1	770016-1
			Duplex[1]	640900-2	—	—		
6	1.550 39.37	UL94V-2	Pre-tin	641832-1	643407-1	—	640585-1	—
		UL94V-0	Pre-tin	641831-1	643408-1	—	640581-1	—
8	2.050 52.07	UL94V-2	Pre-tin	641825-1	—	770143-1	640586-1	—
		UL94V-0	Pre-tin	641828-1	643410-1	770272-1	640582-1	—
		UL94V-0	Duplex[1]	—	643410-2	770272-2	—	—

6, 9, 12 and 15 Circuit, Matrix

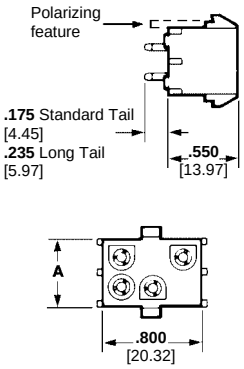

Number of Circuits	A Dim.	Flammability Rating	Pin Finish	Pin Header Part Numbers: Standard Tail[2]	Pin Header Part Numbers: Standard Tail Polarized[2]	Pin Header Part Numbers: Long Tail[3]	Mates with Plug Housing Part Numbers (Using Socket Contacts): UMNL	Mates with Plug Housing Part Numbers (Using Socket Contacts): UMNL II
6	.550 13.97	UL94V-2	Pre-tin	350431-1	641969-1	350585-1	1-480704-0	—
					—	643749-1[5]		
			Duplex[1]	350431-2	—	350585-2		
		UL94V-0	Pre-tin	350711-1	641970-1 1-641970-1[4]	350732-1	350715-1	770020-1
			Duplex[1]	350711-2	641970-2	350732-2		
9	.800 20.32	UL94V-2	Pre-tin	350432-1	641971-1	350586-1	1-480706-0	—
			Duplex[1]	350432-2	641971-2	350586-2		
		UL94V-0	Pre-tin	350712-1	641972-1 1-641972-1[4]	350742-1	350720-1	770021-1
			Duplex[1]	350712-2	641972-2	350742-2		
12	1.050 26.67	UL94V-2	Pre-tin	350433-1	641973-1	350587-1	1-480708-0	—
			Duplex[1]	350433-2	—	350587-2		
		UL94V-0	Pre-tin	350713-1	641974-1 1-641974-1[4]	350737-1	350735-1	770022-1
			Duplex[1]	350713-2	641974-2	350737-2		
15	1.300 33.02	UL94V-2	Pre-tin	350434-1	641975-1	350588-1	1-480710-0	—
			Duplex[1]	350434-2	—	350588-2		
		UL94V-0	Pre-tin	350714-1	641976-1	350738-1	350736-1	770023-1
			Duplex[1]	350714-2	—	350738-2		

[1] Duplex Finish—Plated with .000030 [.000762] min. gold in mating area, matte tin-lead on solder tail end over .000050 [.00127] min. nickel underplate on entire contact.
[2] Use Standard Tail for .062 [1.57] thick PC Board.
[3] Use Long Tail for .125 [3.18] thick PC Board.
[4] Black in color.
[5] No drain holes, used w/ seals, page 9023.

For complete product information, order Catalog 82181

PC Board Vertical Socket Headers

Product Specification:

Centerline spacing—.250 [6.35]

Material:

Housing—UL94V-2 Nylon, natural color, UL94V-0 Nylon
Contacts—Phosphor bronze
Solder tail diameter .062 [1.57]

Related Product Data:

Performance Characteristics—page 9015

Technical Documents: pages 9015 and 9080

Product Specification
108-1053 Universal MATE-N-LOK PC Board Headers

Mating Connectors:

Universal MATE-N-LOK
Plug Housings— page 9019
Universal MATE-N-LOK II
Plug Housings— pages 9006 thru 9008

2, 3, 4, 5, and 6 Circuit, In-Line

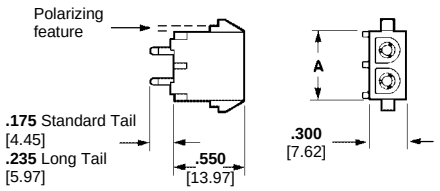

Number of Circuits	A Dim.	Flammability Rating	Socket Finish	Socket Header Part Numbers: Standard Tail[2]	Standard Tail Polarized[2]	Long Tail[3]	Mates with Plug Housing Part Numbers (Using Pin Contacts): UMNL	UMNL II
2	.550 13.97	UL94V-2	Pre-tin	350759-4	643411-1	350986-4	1-480698-0	—
			Duplex[1]	350759-3	—	—		
		UL94V-0	Pre-tin	350824-1	643412-1	350831-1	350777-1	770017-1
			Duplex[1]	350824-2	643412-2	—		
3	.800 20.32	UL94V-2	Pre-tin	350760-4	643413-1	350987-4	1-480700-0	—
			Duplex[1]	350760-3	—	—		
		UL94V-0	Pre-tin	350825-1	643414-1	350832-1	350766-1	770018-1
			Duplex[1]	350825-2	643414-2	350832-2		
4	1.050 26.67	UL94V-2	Pre-tin	350761-4	643415-1	350988-4	1-480702-0	—
			Duplex[1]	350761-3	—	350988-3		
		UL94V-0	Pre-tin	350826-1	643416-1	350833-1	350779-1	770019-1
			Duplex[1]	350826-2	—	350833-2		
5	1.300 33.02	UL94V-2	Pre-tin	640467-1	—	—	1-480763-0	—
		UL94V-0	Pre-tin	640901-1	—	—	350809-1	770016-1
			Duplex[1]	640901-2	—	—		
6	1.550 39. 37	UL94V-0	Duplex[1]	770262-2	—	—	640581-1	—

6, 9, 12 and 15 Circuit, Matrix

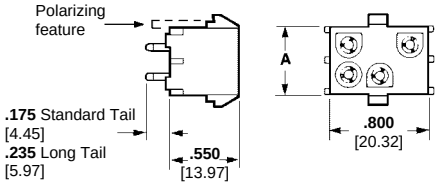

Number of Circuits	A Dim.	Flammability Rating	Socket Finish	Socket Header Part Numbers: Standard Tail[2]	Standard Tail Polarized[2]	Long Tail[3]	Mates with Plug Housing Part Numbers (Using Pin Contacts): UMNL	UMNL II
6	.550 13.97	UL94V-2	Pre-tin	350762-4	643423-1	350989-4	1-480704-0	—
			Duplex[1]	350762-3	—	350989-3		
		UL94V-0	Pre-tin	350827-1	643424-1	350834-1	350715-1	770020-1
			Duplex[1]	350827-2	643424-2	350834-2		
9	.800 20.32	UL94V-2	Pre-tin	350763-4	643425-1	350990-4	1-480706-0	—
			Duplex[1]	350763-3	—	350990-3		
		UL94V-0	Pre-tin	350828-1	643426-1	350835-1	350720-1	770021-1
			Duplex[1]	350828-2	643426-2	350835-2		
12	1.050 26.67	UL94V-2	Pre-tin	350764-4	—	350991-4	1-480708-0	—
			Duplex[1]	350764-3	—	350991-3		
		UL94V-0	Pre-tin	350829-1	643428-1	350836-1	350735-1	770022-1
			Duplex[1]	350829-2	—	350836-2		
15	1.300 33.02	UL94V-2	Pre-tin	350765-4	643429-1	350992-4	1-480710-0	—
			Duplex[1]	350765-3	—	—		
		UL94V-0	Pre-tin	350830-1	643430-1	350837-1	350736-1	770023-1
			Duplex[1]	350830-2	—	350837-2		

[1] Duplex Finish—Plated with .000030 [.000762] min. gold in mating area, matte tin-lead on solder tail end over .000050 [.00127] min. nickel underplate on entire contact.
[2] Use Standard Tail for .062 [1.57] thick PC Board.
[3] Use Long Tail for .125 [3.18] thick PC Board.

For complete product information, order Catalog 82181

Products for Industrial & Commercial Applications
Dimensions are shown for reference purposes only.
Dimensions are in inches and millimeters unless otherwise specified. Values in brackets are metric equivalents.
Specifications subject to change.
Technical Support Center
1-800-522-6752
www.tycoelectronics.com

PC Board Vertical Pin Headers with ACTION PIN Contacts

Material:

Housing — PBT, black
Flammability Rating — UL94V-0
Contacts — Copper alloy, plated with tin-lead over nickel on entire contact

Technical Documents: pages 9015 and 9080

Product Specification
108-5222 Universal MATE-N-LOK ACTION PIN Header Assembly

Mating Connectors:

Universal MATE-N-LOK
Plug Housings — page 9019
Universal MATE-N-LOK II
Plug Housings — pages 9006 thru 9008

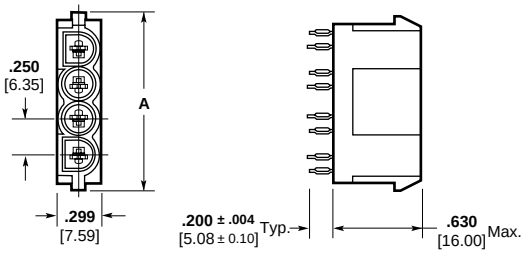

Number of Circuits	A Dim.	Part Numbers	Mates with Housing Part Numbers (Using Socket Contacts)	
			UMNL	UMNL II
2	**.750** 19.05	173924-1	1-480698-0 350777-1	770017-1
3	**1.000** 25.40	173925-1	1-480700-0 350766-1	770018-1
4	**1.250** 31.75	173926-1	1-480702-0 350779-1	770019-1

Note: Install in PC Board with arbor frame tool.

PC Board Right-Angle Pin and Socket Headers

2, 3, 4, 5, 6 and 8 Circuit, In-line

Product Specification:

Centerline spacing—.250 [6.35]

Material:

Housing—Nylon
Contacts—Phosphor bronze
Solder tail width .052 [1.32]

Related Product Data:

Performance Characteristics—page 9015

Technical Documents: pages 9015 and 9080

Product Specification
108-1053 Universal MATE-N-LOK PC Board Headers

Mating Connectors:

Universal MATE-N-LOK Plug Housings— page 9019
Universal MATE-N-LOK II Plug Housings— pages 9006 thru 9008

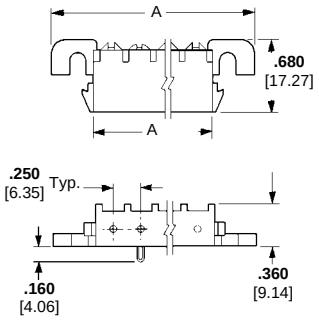

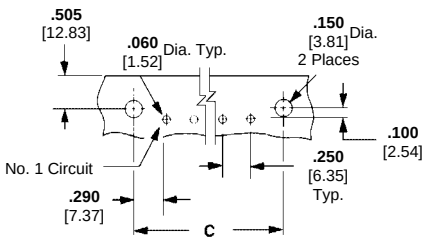

Use 6-32 UNC Pan Head Screw
3/8 [9.53] long for mounting
(Not Supplied)

Recommended PC Board Hole Layout
.062 [1.57] Board Thickness

No. of Circuits	Dimensions A	B	C	Contact Finish	Right-Angle Header Part Numbers UL94V-2 Pin	Socket	Mates with	UL94V-0 Pin	Socket	Mates with UMNL	Mates with UMNL II
2	.550 13.97	1.245 31.62	.830 21.08	Pre-tin	—	—	—	1-350942-0	643226-1	350777-1	770017-1
								770994-1[2]	—		
				Duplex[1]	—	—	—	2-350942-0	—		
3	.800 20.32	1.495 37.97	1.080 27.43	Pre-tin	—	—	—	1-350943-0	643228-1	350766-1	770018-1
				Duplex[1]	—	—		2-350943-0	643228-2		
4	1.050 26.67	1.745 44.32	1.330 33.78	Pre-tin	1-350948-0	—	1-480702-0	1-350944-0	643230-1	350779-1	770019-1
				Duplex[1]	—	—		2-350944-0	643230-2		
5	1.300 33.02	1.995 50.67	1.580 40.13	Pre-tin	1-350949-0	—	1-480763-0	1-350945-0	643232-1	350809-1	770016-1
				Duplex[1]	—	—		2-350945-0	643232-2		
6	1.550 39.37	2.245 57.02	1.830 46.48	Pre-tin	640587-1	643235-1	640585-1	640583-1	643234-1	640581-1	—
				Duplex[1]	—			640583-2	643234-2		
8	2.050 52.07	2.745 69.72	2.330 59.18	Pre-tin	—	643237-1	640586-1	640584-1	643236-1	640582-1	—
				Duplex[1]	—			640584-2	643236-2		

[1] Duplex Finish—Plated with .000030 [.000762] min. gold in mating area, matte tin-lead on solder tail end over .000050 [.00127] min. nickel underplate on entire contact.
[2] Black in color.

Test Connectors (with spring loaded contacts)

2, 3, 4 and 5 Circuit, In-Line

Material:

Housing—Nylon
Flammability Rating—UL94V-0

Related Product Data:

Mating Connectors—Housings and headers having the same number of circuits. The housings can have pin or socket contacts, or a combination of both.

Mating Housings— page 9019

Mating Headers— pages 9025 thru 9027

Other Mating Connectors:

Universal MATE-N-LOK II Housings— pages 9006 thru 9008

Plug

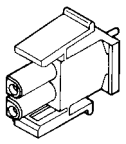

Cap

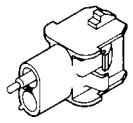

6, 9, 12 and 15 Circuit, Matrix

Plug

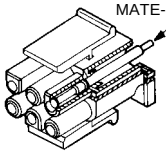

Cap

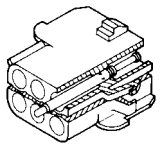

Number of Circuits	Part Numbers Plug	Cap
2	350848-2	350849-2
3	350848-3	350849-3
4	350848-4	350849-4
5	350848-5	350849-5
6	350848-6	350849-6
9	350848-9	350849-9
12	1-350848-2	1-350849-2
15	1-350848-5	1-350849-5

Notes:
1. Test probes have 5 amp maximum current rating. 1,000,000 cycles.
2. Test Connector housings are of the same configuration as standard housings. Refer to page 9019 for dimensional specifications.

For complete product information, order Catalog 82181

Products for Industrial & Commercial Applications
Dimensions are shown for reference purposes only.
Dimensions are in inches and millimeters unless otherwise specified. Values in brackets are metric equivalents.
Specifications subject to change.
Technical Support Center
1-800-522-6752
www.tycoelectronics.com

Product Facts

- **Fully polarized nylon housings**
- **Easy cavity identification**
- **Locking devices are integral part of design. Mated connector halves are designed to withstand a high degree of vibration and shock**
- **Built-in contact stabilization and self-aligning features**
- **Hot side egg-crate design for safety**
- **Precision molded to exacting tolerances**
- **Contacts accept a wire size range of 30-14 AWG [.05-2.0 mm²]**
- **Keying plug available**
- **"Clean" design contact — no sharp projections to impede insertion or damage housings**
- **Low insertion/extraction forces**
- **Contacts available in pre-tin or gold over nickel plated to fit the application requirements**
- **Wire to PC board capability using pin or socket headers**
- **Solderability: Headers meet MIL-STD 202 method 208**
- **Four circuit PC Board-to-PC Board capability available by mating vertical socket header with either vertical, right-angle or surface mount pin header**
- **Four circuit insulation displacement connector (IDC) available**
- **Ultraviolet (UV) stable housings available in 1, 2 and 3 circuit**
- **Not for interrupting current**
- **Recognized under the Component Program of Underwriters Laboratories Inc., File No. E28476**
- **Certified by Canadian Standards Association, File No. LR 7189A**

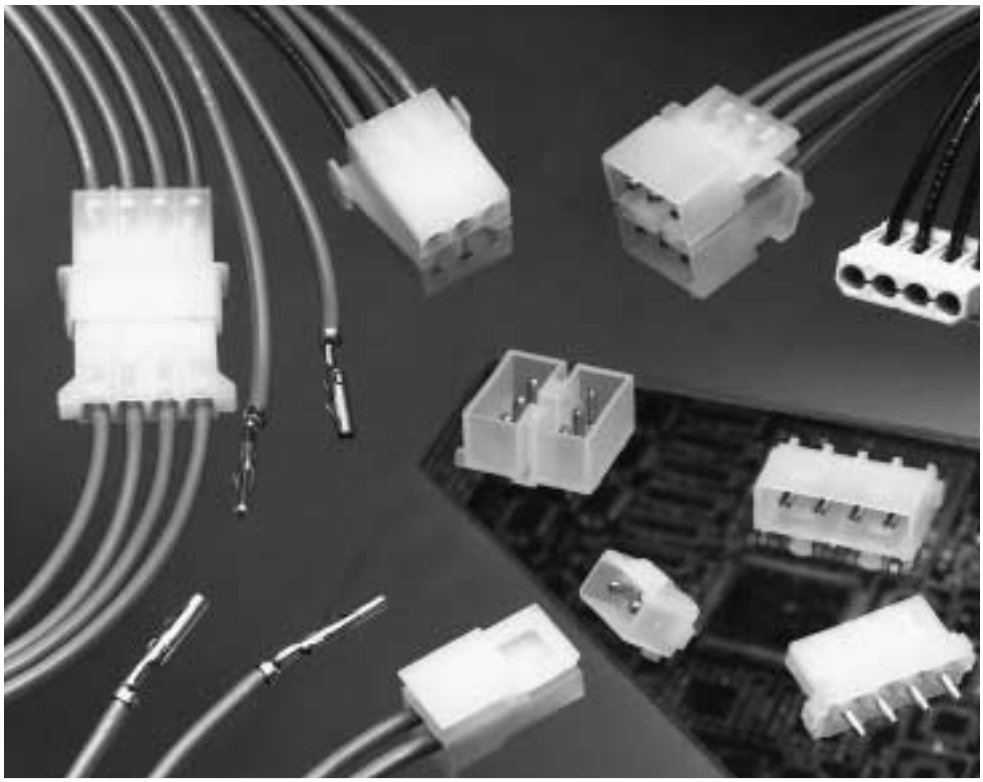

Performance Characteristics:

The Commercial MATE-N-LOK Connector performance characteristics found below are based on free hanging and panel mount connectors, loaded with contacts crimped on stranded wire.

Dielectric Withstanding Voltage — 1.5 KVAC between adjacent circuits

Insulation Resistance — 500 megohms minimum initial between adjacent circuits

Voltage Rating — 250V AC or DC

Connector Mating — 4 lb. max. per circuit

Connector Unmating — 0.7 lb. min. per circuit

Contact Retention — 15 lb. min. per contact

Durability — 50 cycles, mating and unmating

Commercial MATE-N-LOK connectors also will withstand the following tests:

Vibration — 10-55-10 cycles per minute at .06 inch total excursion

Physical Shock — 18 drops, 50 g sawtooth at 11 milliseconds

Mounting Housing Panel Retention — 40 lb. min. 3 and 4 circuit
65 lb. min. 6, 9, 12, and 15 circuit

Housing Lock Strength with Positive Locking Devices Engaged — 25 lb. min.

Thermal Shock — -55°C to ¯85°C

Temperature-Humidity Cycling — 25°C to 65°C at 95% RH

Corrosion — 48 hr. at 5% salt concentration

Technical Documents:

Product Specifications
108-1000 Commercial MATE-N-LOK Connectors
108-1077 Commercial MATE-N-LOK PC Board Headers
108-49000 IDC Connectors

Application Specifications
114-1012 Commercial MATE-N-LOK Contacts
114-49001 IDC Connectors

Instruction Sheets
408-7209, 408-7166, 408-7200, 408-7201, 408-7215, 408-3186

For complete product information, order Catalog 82181

Commercial MATE-N-LOK Connector Mating Combinations

Connector Part Number					Mating Connector Part Numbers							
							PC Board Headers					
								Vertical Pin			Vertical Socket	
Number of Circuits	Flammability Rating	Style	Housing Type	Connector Part Numbers	Housing Part Numbers	Housing Type	Plating	Standard Tail	Long Tail	Right-Angle Pin	Standard Tail	Long Tail
1	UL94V-2	In-Line	Socket: FH	1-480349-0	1-480350-0	Pin: FH	—	—	—	—	—	—
					1-480351-0	Pin: FH Positive Lock	—	—	—	—	—	—
			Socket: FH UV Stable	1-480400-0	1-480401-1	Pin: FH UV Stable	—	—	—	—	—	—
2	UL94V-2	In-Line	Socket: FH	1-480318-0	1-480319-0	Pin: FH	Pre-tin	350209-1	350422-1	794120-1	—	—
							Duplex[1]	350209-2	—	—	—	—
			Socket: FH UV Stable	1-480393-1	1-480498-1	Pin: FH UV Stable	—	—	—	—	—	—
			Socket: FH Positive Lock	1-480720-0	794012-1	Pin: FH Positive Lock	Pre-tin	350539-1	350540-1	—	—	—
							Duplex[1]	350539-2	—	—	—	—
3	UL94V-2	In-Line	Socket: FH	1-480303-0	1-480305-0	Pin: FH	Pre-tin	350210-1	350423-1	643488-1	—	—
							Duplex[1]	350210-2	—	—	—	—
			Socket: PM	1-480304-0								
			Socket: FH Positive Lock	1-480721-0	—	—	Pre-tin	350541-1	350542-1	—	—	—
							Duplex[1]	350541-2	—	—	—	—
			Socket: FH UV Stable	1-480388-0	1-480387-0	Pin: FH UV Stable	—	—	—	—	—	—
4	**See page 9031 for 4 position mating combinations**											
6	UL94V-2	Matrix	Socket: FH Positive Lock	1-480270-0	1-480340-0	Pin: FH Positive Lock	Pre-tin	1-380999-0	350425-1	—	—	—
					1-480271-0	Pin: MM Positive Lock	Duplex[1]	2-380999-0	350425-2	—	—	—
			Socket: PM Positive Lock	1-480273-0	1-480276-0	Pin: PM Positive Lock	—	—	—	—	—	—
			Pin: PM Positive Lock	1-480276-0	1-480273-0	Socket: PM Positive Lock	Pre-tin	—	—	—	350641-1	350576-1
							Duplex[1]	—	—	—	—	—
8	UL94V-2	Dual Row	Socket: FH Positive Lock	1-480283-0	1-480345-0	Pin: FH Positive Lock	Pre-tin	350212-1	350426-1	—	—	—
					1-480284-0	Pin: MM Positive Lock	Duplex[1]	350212-2	350426-2	—	—	—
9	UL94V-2	Matrix	Pin: PM Positive Lock	1-480277-0	1-480274-0	Socket: PM Positive Lock	Pre-tin	—	—	—	350642-1	350577-1
							Duplex[1]	—	—	—	350642-2	—
10	UL94V-2	Dual Row	Socket: FH Positive Lock	1-480285-0	1-480339-0	Pin: FH Positive Lock	Pre-tin	1-380991-0	350219-1	—	—	—
					1-480286-0	Pin: MM Positive Lock	Duplex[1]	2-380991-0	—	—	—	—
12	UL94V-2	Dual Row	Socket: MM Positive Lock	1-480287-0	1-480288-0	Pin: MM Positive Lock	Pre-tin	350213-1	350220-1	—	—	—
							Duplex[1]	350213-1	350220-2	—	—	—
		Matrix	Pin: PM Positive Lock	1-480278-0	1-480275-0	Socket: PM Positive Lock	Pre-tin	—	—	—	350643-1	350578-1
15	UL94V-2	Matrix	Pin: PM Positive Lock	1-480324-0	1-480323-0	Socket: PM Positive Lock	Pre-tin	—	—	—	350644-1	350579-1
16	UL94V-2	Dual Row	Socket: MM Positive Lock	1-480438-0	1-480439-0	Pin: MM Positive Lock	Pre-tin	350214-1	350427-1	—	—	—
							Duplex[1]	350214-2	350427-2	—	—	—

FH: Free Hanging **PM: Panel Mount** **MM: Motor Mount**

[1] Duplex Finish — Plated with .000030 [.000762] min. gold in mating area, matte tin-lead on solder tail end over .000050 [.00127] min. nickel underplate on entire contact.

Commercial MATE-N-LOK 4-Position In-Line Mating Combinations

(**Note:** These connectors are used by the disk drive industry.)

Connector Part Number			Mating Connector Part Number													
			Socket Connectors						PC Board Pin Headers							
								Vertical				Right-Angle				
Flammability Rating	Connector Type	Connector Part Numbers	Housing Part Numbers	Housing Type	Plating	Insulation Displacement Connector	AWG	PC Board Vertical Socket Header	Standard Tail	Long Tail	Surface Mount	EdgeMount	Standard	Mid Mount Reverse Pol.	W/Fixed Belt	W/Fixed Belt Reverse Pol.
ULV94V-2	Socket Housing Positive Lock	1-480772-0	—	—	Pre-tin	—	—	—	350543-1	350544-1	—	—	—	—	—	—
					Duplex[1]	—	—	—	350543-2	350544-2	—	—	—	—	—	—
	Socket Housing Detent Lock	1-480424-0	1-480426-0	Pin	Pre-tin	—	—	—	350211-1			175332-2	641737-1		174804-1	
									770328-1[3]	350424-1	770829-1			84069-1	174804-2	174552-1
									1-770328-1[4]			175332-3	770846-1		174804-3	
					Duplex[1]	—	—	—	350424-2	350424-2	—	—	—	—	—	—
	Pin Housing Detent Lock	1-480426-0	1-480424-0	Socket	Pre-tin	770156-2	22	770997-1 794287-1[2]	—	—	—	—	—	—	—	—
						770156-3	18									
						770156-4	20									
			1-480425-0	Socket PM		770156-5	16									
					Duplex[1]	770526-1	18	—	—	—	—	—	—	—	—	—
	Pin Housing Detent Lock High Temp	3-480426-0	3-480425-0	Socket High Temp	—	—	—	—	—	—	—	—	—	—	—	—
	Socket Header	770997-1 794287-1[2]	1-480426-0	Pin	Pre-tin	—	—	—	350211-1	350424-1	770829-1	175332-2	641737-1		174804-1	
												175332-3	770846-1	84069-1	174804-2	174552-1
															174804-3	
	Insulation Displacement Connector (IDC)	770156-2 770156-3 770156-4 770156-5	1-480426-0	Pin	Pre-tin	—	—	—	350211-1	350424-1	770829-1	175332-2 175332-3	641737-1 770846-1	84069-1	174804-1 174804-2 174804-3	174552-1
		770526-1			Duplex[1]	—	—	—	350424-2	350424-2	—	—	—	—	—	—
ULV94V-0	Socket Housing	770827-1	794132-1	Pin	Pre-tin	—	—	—	—	—	—	—	1-641737-1	—	—	—
	Insulation Displacement Connector (IDC)	794036-1 794036-2 794036-3 794036-4	794132-1	—	Pre-tin	—	—	—	—	—	—	—	1-641737-1	—	—	—
	Right-Angle Pin Header	1-641737-1	770827-1	Socket	Pre-tin	794036-1	18	—	794236-1	—	—	—	—	—	—	—
						794036-2	20									
						794036-3	22									
						794036-4	16									

PM: Panel Mount

[1] Duplex Finish— Plated with .000030 [.000762] min. gold in mating area, matte tin-lead on solder tail end over .000050 [.00127] min. nickel underplate on entire contact.
[2] Surface Mount Compatible.
[3] With Drainholes
[4] Tube Loaded

For complete product information, order Catalog 82181

Products for Industrial & Commercial Applications
Dimensions are shown for reference purposes only.
Dimensions are in inches and millimeters unless otherwise specified. Values in brackets are metric equivalents.
Specifications subject to change.
Technical Support Center
1-800-522-6752
www.tycoelectronics.com

Contacts

Product Specifications:

Pin diameter—.084 [2.13]
Stock thickness—.012 [.305]

These contacts are to be used in Commercial MATE-N-LOK housings only.

Related Product Data:

Performance Characteristics— pages 9029 and 9030
Housings— pages 9034 thru 9036
Application Tooling — pages 9081, 9082 and 9084

Technical Documents: page 9029 and 9080

Product Specification
108-1000 Commercial MATE-N-LOK Connectors

Application Specification
114-1012 Commercial MATE-N-LOK Contacts

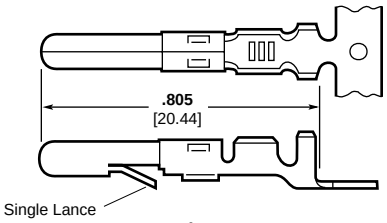

Pin

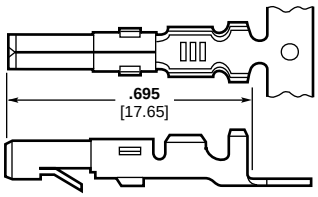

Socket

Wire Size Range AWG [mm²]	Ins. Dia. Range	Material & Finish	Contact Part Numbers				HDM Applicator Part Numbers	Hand Tool Part Numbers
			Pin		Socket			
			Strip Form	Loose Form	Strip Form	Loose Form		
30-22 [.05-.3]	**.040-.075** 1.02-1.91	Brass, Pre-tin	350079-1	61174-1	350078-1	61173-1	466426-1[3] 466426-2[3] 466426-3[3]	90066-7
		Phos. Brz., Pre-tin	350079-4	—	350078-4	61173-4		
		Brass, Gold[1]	350079-5	61174-5	350078-5	61173-5		
24-18 [.2-.8]	**.060-.100** 1.52-2.54	Brass, Pre-tin	61116-1	60618-1	61314-1	60617-1	466320-1[3] 466320-2[3] 466320-4[3]	90123-2 90123-5[4]
		Phos. Brz., Pre-tin	61116-4	60618-4	61314-4	60617-4		
		Brass, Gold[1]	61116-5	60618-5	61314-5	60617-5		
		Phos. Brz., Select Gold[2]	61116-6	60618-6	61314-6	60617-6		
		Brass, Select Gold[2]	61116-7	—	61314-7	—		
20-14 [.5-2.0]	**.100-.130** 2.54-3.30	Brass, Pre-tin	61118-1	60620-1	61117-1	60619-1	687763-1[3] 687763-2[3] 687763-6[3]	90124-2
		Phos. Brz., Pre-tin	61118-4	60620-4	61117-4	60619-4		
		Brass, Gold[1]	61118-5	60620-5	61117-5	60619-5		
		Phos. Brz., Gold[1]	61118-6	—	61117-6	60619-7		
		Brass, Select Gold[2]	61118-7	—	61117-7	—		
(2) 18 [.8] or (1) 18 [.8] and (1) 16 [1.2]	(2) **.115 Max.** 2.92 (stacked)	Brass, Pre-tin	350558-1	350639-1	350557-1	—	687898-1[3] 687898-2[3] 687898-4[3]	90124-2
		Phos. Brz., Pre-tin	350558-4	—	350557-4	350638-4		

[1] Gold Finish — Plated with .000030 [.000762] min. gold in mating area and inside wire barrel over .000050 [.00127] min. nickel underplate on entire contact.
[2] Select Gold Finish — Plated with .000030 [.000762] min. gold in mating area over .000050 [.00127] min. nickel underplate on entire contact.
[3] HDM Applicator part number ending in -1 is used on AMPOMATOR CLS Machine with T or G Terminators, -2 is used on AMP-O-LECTRIC Model K Machine; -3, -4, or -6 is used on AMP-O-LECTRIC Model G Machine. See page 9084 for further information.
[4] Use Hand Tool No. 90123-5 for .043-.075 [1.09-1.90] insulation diameter.

Notes: 1. Extraction Tools: Pins — No. **1-305183-1** (IS 408-7158); Sockets — No. **1-305183-2** (IS 408-7158); Pins and Sockets — No. **465644-1** (IS 408-7211)
2. Insertion Tool: No. **455830-1** (IS 408-7984)

Commoning Tabs

Material and Finish:

Brass, tin plated
Stock thickness .008 [.203]

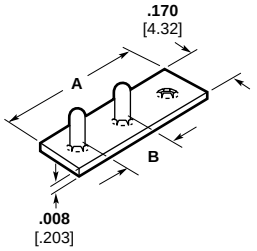

Number of Holes	Dimensions		Part Numbers
	A	B	
2	**.377** 9.58	**.203** 5.16	60843-1
2	**.355** 9.02	**.195** 4.95	350444-1
3	**.579** 14.71	**.203** 5.16	60842-1
3	**.550** 13.97	**.195** 4.95	350444-2

Note: Commoning tabs are designed to be used with pin housings.

For complete product information, order Catalog 82181

Products for Industrial & Commercial Applications
Dimensions are shown for reference purposes only.
Dimensions are in inches and millimeters unless otherwise specified. Values in brackets are metric equivalents.
Specifications subject to change.
Technical Support Center 1-800-522-6752 www.tycoelectronics.com

Contacts

PC Board Contacts

Product Specifications:

Pin diameter—.084 [2.13]
Stock thickness—.012 [.305]

These contacts are to be used in Commercial MATE-N-LOK housings only.

Related Product Data:

Performance Characteristics — pages 9029 and 9030
Housings — pages 9034 thru 9036

Technical Documents: pages 9029 and 9080

Product Specifications
108-1000 Commercial MATE-N-LOK Connectors

Application Specification
114-1012 Commercial MATE-N-LOK Contacts

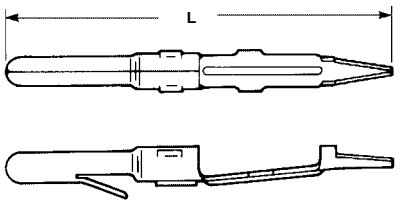

Pin

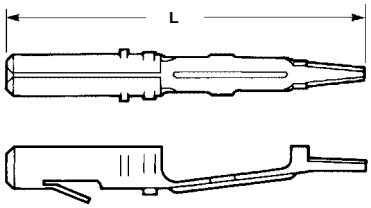

Socket

Type of Contact	L Dimensions		Material & Finish	Part Numbers	
	Pin	Socket		Pin	Socket
				Loose Form	Loose Form
PC Board	**1.110** [28.19]	**1.010** [25.65]	Phos. Brz., Pre-tin	61518-1[1]	61320-1[1]
	1.210 [30.73]	**1.110** [28.19]	Phos. Brz., Pre-tin	350074-1[2]	350073-1[2]

[1] For .062 [1.57] max. board thickness — Board hole size .057 [1.45]
[2] For .125 [3.14] max. board thickness — Board hole size .057 [1.45]

Grounding Pin

(.095 [2.41] longer than standard pin)

(Mate first, break last, not for interrupting current)

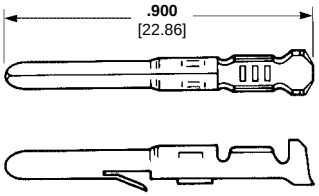

Wire Size Range AWG [mm²]	Ins. Dia. Range	Material & Finish	Contact Part Numbers		HDM Applicator Part Numbers	Hand Tool Part Number
			Strip Form	Loose Form		
24-18 [.2-.8]	**.060-.100** 1.52-2.54	Brass, Pre-tin	61527-2	—	466320-1[1] 466320-2[1] 466320-4[1]	90123-2

[1] HDM Applicator part number ending in -1 is used on AMPOMATOR CLS Machine with T or G Terminators, -2 is used on AMP-O-LECTRIC Model K Machine; -3, -4, or -6 is used on AMP-O-LECTRIC Model G Machine. See page 9084 for further information.

Keying Plug

IS 408-7582

Material:

Housing — Nylon, natural color
Flammability Rating — UL94V-2

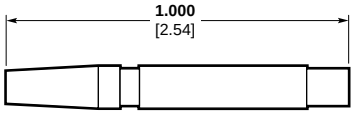

Part Number
200821-1
Note: Keying plug snaps into socket housing

For complete product information, order Catalog 82181

Housings, Free Hanging

Product Specification:

Centerline spacing—.200 [5.08]

Material:

Housing — Nylon, natural color
Flammability Rating — UL94V-2

Related Product Data:

Performance Characteristics — pages 9029 and 9030
Contacts — pages 9032 and 9033
Keying Plug — page 9033
Commoning Tab — page 9032
Mating Pin Headers — pages 9037 and 9040
Mating Socket Header — page 9038

Technical Documents: pages 9029 and 9080

Product Specification
108-1000 Commercial MATE-N-LOK Connectors

1 Circuit

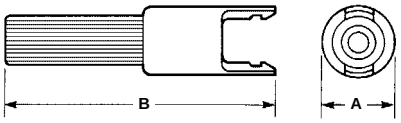

Pin Housing (Cap) Detent Lock

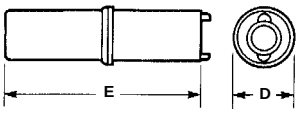

Socket Housing (Plug)

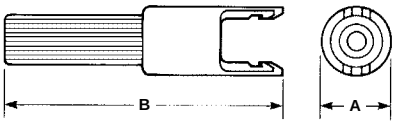

Pin Housing (Cap) Positive Lock

2, 3 and 4 Circuit, In-Line

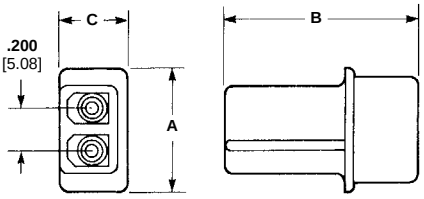

Pin Housing (Cap)

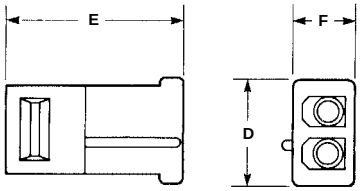

Socket Housing (Plug)

Number of Circuits	Dimensions						Part Numbers	
	A	B	C	D	E	F	Pin Housing (Cap)	Socket Housing (Plug)
1	**.300** 7.62	**1.200** 30.48	—	**.260** 6.60	**.870** 22.10	—	1-480350-0[1]	1-480349-0
	.300 7.62	**1.240** 31.49	—	**.260** 6.60	**.870** 22.10	—	1-480351-0[2]	1-480349-0
	.300 7.62	**1.325** 33.65	—	**.260** 6.60	**.995** 25.27	—	1-480401-0[1,3]	1-480400-0[3]
2	**.610** 15.49	**.930** 23.62	**.330** 8.38	**.530** 13.46	**.860** 21.84	**.295** 7.49	1-480319-0[1,5]	1-480318-0[5]
	.610 15.49	**.930** 23.62	**.330** 8.38	**.530** 13.46	**.860** 21.84	**.295** 7.49	1-480498-1[1,3,5]	1-480393-1[3,5]
3	**.810** 20.57	**.930** 23.62	**.325** 8.25	**.825** 20.95	**.850** 21.60	**.290** 7.37	1-480305-0[1,5]	1-480303-0[5]
	.810 20.57	**.930** 23.62	**.325** 8.25	**.825** 20.95	**.850** 21.60	**.290** 7.37	1-480387-0[1,3,5]	1-480388-0[3,5]
4	**1.010** 25.65	**.930** 23.62	**.330** 8.38	**1.030** 26.16	**.850** 21.60	**.310** 7.88	1-480426-0[1,5,6]	1-480424-0[5,6]
	—	—	—	**1.030** 26.16	**.850** 21.60	**.310** 7.88	794132-1[4,5,6]	770827-1[4,5,6]

[1] Detent lock
[2] Positive lock
[3] UV Stable black color
[4] Housing Material UL94V-0 rated
[5] Housing accepts double wire applications where individual insulation diameters do not exceed .115 [2.92].
[6] Used by the disk drive industry.

For complete product information, order Catalog 82181

Products for Industrial & Commercial Applications
Dimensions are shown for reference purposes only.
Dimensions are in inches and millimeters unless otherwise specified. Values in brackets are metric equivalents.
Specifications subject to change.
Technical Support Center 1-800-522-6752 www.tycoelectronics.com

Housings, Panel Mount Positive Lock

Material:

Housing — Nylon, natural color
Flammability Rating — UL94V-2

Related Product Data:

Performance Characteristics — pages 9029 and 9030
Contacts — pages 9032 and 9033
Keying Plug — page 9033
Commoning Tab — page 9032
Mating Socket Headers — page 9038
Mating IDC — page 9039

Technical Documents: pages 9029 and 9080

Product Specification
108-1000 Commercial MATE-N-LOK Connectors

3 and 4 Circuit, In-Line

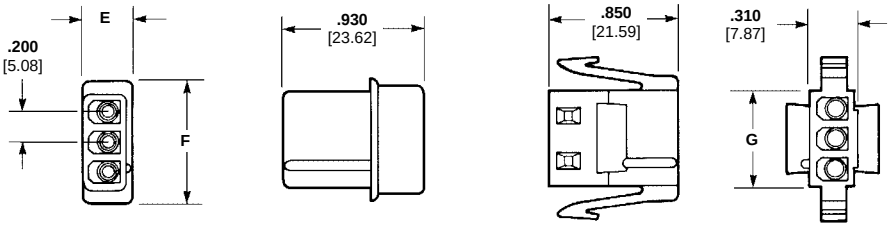

Pin Housing (Cap)

Socket Housing (Plug)

6, 9, 12 and 15 Circuit, Matrix

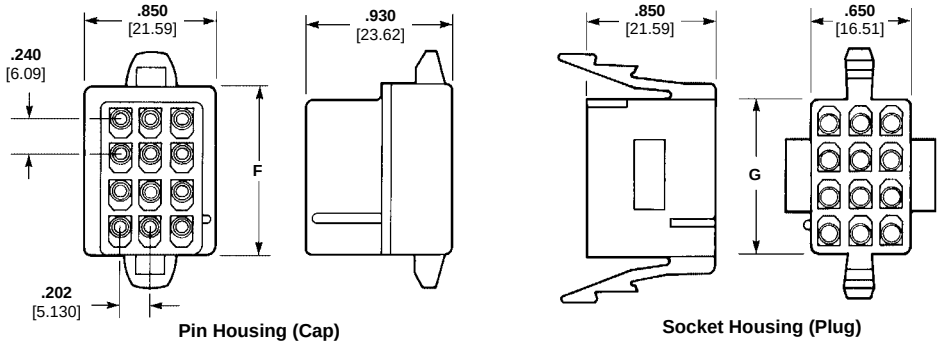

Pin Housing (Cap)

Socket Housing (Plug)

Number of Circuits	Dimensions			Part Numbers	
	E	F	G	Pin Housing (Cap)	Socket Housing (Plug)
3	**.325** 8.26	**.810** 20.57	**.630** 16.00	1-480305-0[2]	1-480304-0
4	**.330** 8.38	**1.010** 25.65	**.825** 20.96	1-480426-0[2,4] 3-480426-0[1,2,4]	1-480425-0[4] 3-480425-0[1,4]
6	—	**.665** 16.89	**.555** 14.10	1-480276-0[3]	1-480273-0
9	—	**.905** 22.99	**.795** 20.19	1-480277-0[3]	1-480274-0
12	—	**1.145** 29.08	**1.045** 26.54	1-480278-0[3]	1-480275-0
15	—	**1.382** 35.10	**1.280** 32.51	1-480324-0[3]	1-480323-0

[1] Housing material has 125°C temperature rating
[2] Detent lock
[3] Positive lock
[4] Used by disk drive industry

Recommended Panel Cutout for Panel Mount Socket Housing

View is from socket housing entry side

Mounting Information

1. Recommended panel thickness—.025-.065 [.635-1.65].
2. Both locking legs are to be squeezed together and the housing is to be inserted "straight-in", as opposed to a rocking manner.
3. The panel should be punched so that the housing enters the panel in the same direction as the punch.
4. The panel must not have any material (paint, porcelain, etc.) applied in the mounting hole area that would decrease the retention of the housing in the panel.
5. If the two items above are not complied with, the "A" dimension should be reduced .020 [5.08] to allow proper retention.

3 and 4 Circuit, In-Line

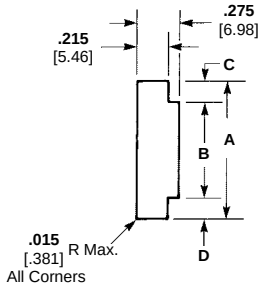

6, 9, 12 and 15 Circuit, Matrix

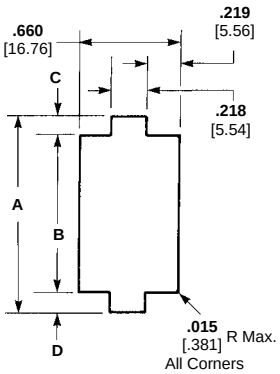

Number of Circuits	Dimensions	
	A	B
3	**.890** 22.61	**.645–.635** 16.38–16.13
4	**1.100** 27.94	**.845–.835** 21.46–21.21
6	**.840** 21.34	**.575–.570** 14.61–14.48
9	**1.075** 27.31	**.815–.810** 20.70–20.57
12	**1.320** 33.53	**1.055–1.050** 26.80–26.67
15	**1.550** 39.37	**1.290–1.285** 32.77–32.64

Note: Dimensions "C" and "D" are to be equal.

For complete product information, order Catalog 82181

Products for Industrial & Commercial Applications
Dimensions are shown for reference purposes only.
Dimensions are in inches and millimeters unless otherwise specified. Values in brackets are metric equivalents.
Specifications subject to change.
Technical Support Center
1-800-522-6752
www.tycoelectronics.com

Motor Mount—6, 8, 12 and 16 Circuit, Dual Row, Positive Lock

Material:

Housing — UL94V-2 Nylon, Natural Color

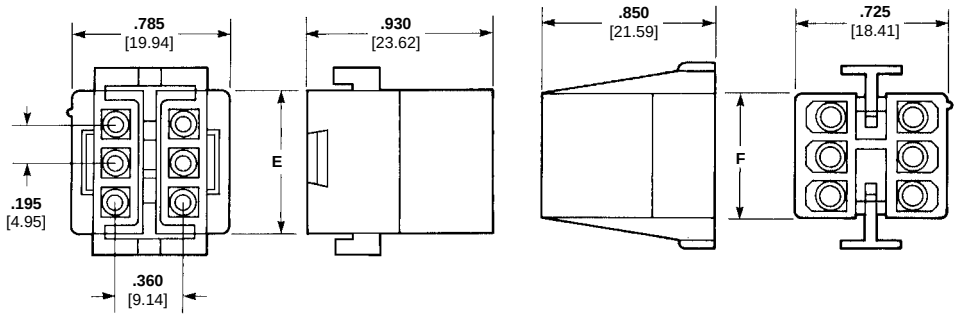

Pin Housing (Cap) **Socket Housing (Plug)**

Number of Circuits	Dimensions		Part Numbers	
	E	F	Pin Housing (Cap)	Socket Housing (Plug)
6	**.705** 17.90	**.610** 15.49	1-480271-0	1-480270-0[1]
8	**.900** 22.86	**.805** 20.45	1-480284-0	1-480283-0[1]
10	**1.095** 27.81	**1.000** 25.4	1-480286-0	1-480285-0[1]
12	**1.290** 32.77	**1.195** 30.35	1-480288-0	1-480287-0
16	**1.680** 42.67	**1.585** 40.26	1-480439-0	1-480438-0

[1] Housing accepts double wire applications where individual insulation diameters do not exceed .115 [2.92].

Recommended Panel Cutout for Motor Mount Pin Housing

View is from pin housing entry side.

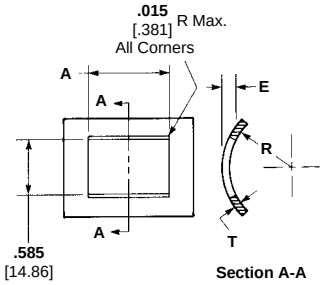

Section A-A

Note: Motor mount housings may be used in flat panels

Number Circuits	A Dim.
6	**.715** 18.16
8	**.910** 23.11
10	**1.105** 28.07
12	**1.300** 33.02
16	**1.690** 42.93

Mounting Information

1. Recommended panel thickness "E" is .040-.100 [1.02-2.54] and is dependent on "T" and "R".
2. The pin housing must be inserted in a rocking manner.
3. The panel must be punched so that the housing enters the panel in the same direction as the punch.

PC Board Vertical Pin Headers

Material:

Housing — Nylon, natural color
Flammability Rating — UL94V-2
Contacts — Phosphor bronze
Solder tail diameter .062 [1.57]

Related Product Data:

Performance Characteristics — page 9029
Mating Socket Housings— pages 9034 thru 9036
Mating Socket Header— page 9038
Mating IDC Socket— page 9039

Technical Document: pages 9029 and 9080

Product Specification
108-1077 Commercial MATE-N-LOK PC Board Headers

2, 3, and 4 Circuit, In-Line

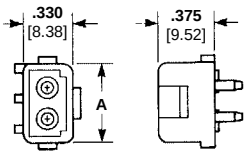

Positive Lock

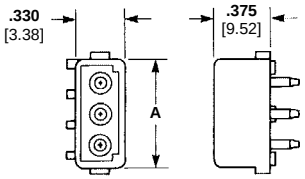

Detent Lock

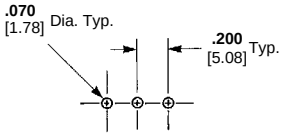

Recommended PC Board Hole Layout
Mounting Dimensions

6, 8, 10, 12 and 16 Circuit, Dual Row

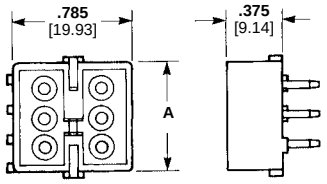

Positive Lock

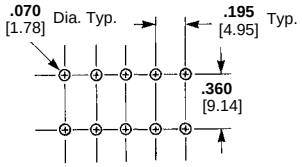

Recommended PC Board Hole Layout
Mounting Dimensions

Number of Circuits	A Dim.	Type Lock	Finish	Part Numbers: Standard[2] Tail	Part Numbers: Long[3] Tail	Mates with Socket Housing Part Numbers
2	**.515** 13.09	Positive	Pre-tin	350539-1	350540-1	1-480720-0
			Duplex[1]	350539-2	—	
		Detent	Pre-tin	350209-1	350422-1	1-480318-0
			Duplex[1]	350209-2	—	
3	**.715** 18.17	Positive	Pre-tin	350541-1	350542-1	1-480721-0
			Duplex[1]	350541-2	—	
		Detent	Pre-tin	350210-1	350423-1	1-480303-0 or 1-480303-9
			Duplex[1]	350210-2	—	
4	**.915** 23.24	Positive	Pre-tin	350543-1[5]	350544-1[5]	1-480722-0[5]
			Duplex[1]	350543-2[5]	350544-2[5]	
		Detent	Pre-tin	350211-1[5]		1-480424-0[4,5]
				770328-1[5,6]	350424-1[5]	
				1-770328-1[5,6,7]	794431-1[5,8]	
				794236-1[5,8]		
			Duplex[1]	350211-2[5]	350424-2[5]	
6	**.705** 17.91	Positive	Pre-tin	1-380999-0	350425-1	1-480270-0
			Duplex[1]	2-380999-0	350425-2	
8	**.900** 22.86	Positive	Pre-tin	350212-1	350426-1	1-480283-0
			Duplex[1]	350212-2	350426-2	
10	**1.095** 27.81	Positive	Pre-tin	1-380991-0	350219-1	1-480285-0
			Duplex[1]	2-380991-0	—	
12	**1.290** 32.77	Positive	Pre-tin	350213-1	350220-1	1-480287-0
			Duplex[1]	350213-2	350220-2	
16	**1.680** 42.68	Positive	Pre-tin	350214-1	350427-1	1-480438-0
			Duplex[1]	350214-2	350427-2	

[1] Duplex Finish — Plated with .000030 [.000762] min. gold in mating area, matte tin-lead on solder tail end over .000050 [.00127] min. nickel underplate on entire contact.
[2] Use standard tail for .062 [1.57] thick PC Board.
[3] Use long tail for .125 [3.18] thick PC Board.
[4] Other mating connectors include a vertical PC board socket header and the insulation displacement connectors (IDC).
[5] Used by the disk drive industry.
[6] With drain holes.
[7] Tube loaded.
[8] Housing material UL94V-0 rated.

For complete product information, order Catalog 82181

Products for Industrial & Commercial Applications
Dimensions are shown for reference purposes only.
Dimensions are in inches and millimeters unless otherwise specified. Values in brackets are metric equivalents.
Specifications subject to change.
Technical Support Center
1-800-522-6752
www.tycoelectronics.com

PC Board Surface Mount Right-Angle Pin Header

Material and Finish:

Housing — Nylon, black color (770829-1); natural color (770149-1)
Flammability Rating — UL94V-2
Contact — Phosphor bronze, pre-tin
Solder tail width .052 [1.32]

4 Circuit, In-Line

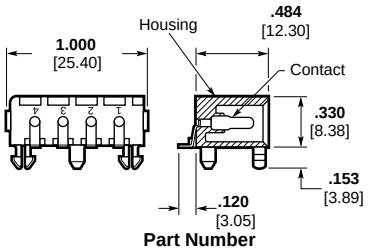

Part Number
770829-1

Note:
1. Mating parts include socket housings, a vertical PC board socket header below and the insulation displacement connectors (IDC).
2. Used by the disk drive industry.

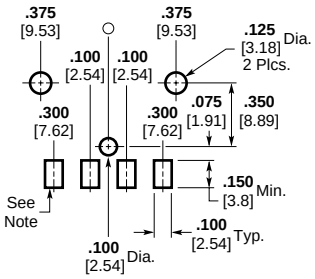

Note: .010 [.25] min. thick solder paste, 63/27
Recommended PC Board Layout
.062 [1.57] thick PC Board

PC Board Vertical Socket Headers

Material:

Housing — Nylon, natural color
Flammability Rating — UL94V-2
Contacts — Phosphor bronze
Solder tail diameter .062 [1.57]

Related Product Data:

Performance Characteristics — page 9029
Mating Pin Housings— pages 9034 thru 9036
Mating Pin Headers — pages 9037 thru 9040

Technical Document: pages 9029 and 9080

Product Specification
108-1077 Commercial MATE-N-LOK PC Board Headers

4 Circuit, In-Line

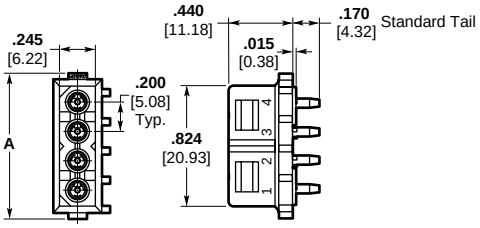

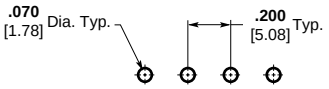

Recommended PC Board Hole Layout
.062 [1.57] thick PC Board

6, 9, 12 and 15 Circuit, Matrix

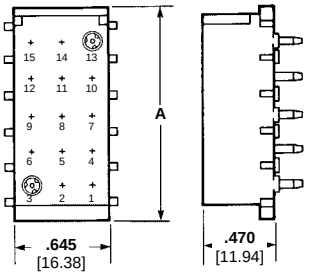

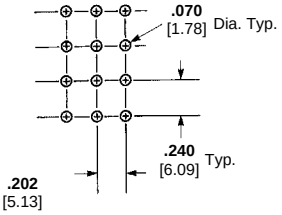

Recommended PC Board Hole Layout
.062 [1.57] thick PC Board

Number of Circuits	A Dim.	Finish	Part Numbers		Mates with Pin Housing Part Numbers
			Standard Tail[5]	Long Tail[6]	
4	**1.000** 25.40	Pre-tin	770997-1[3]	—	1-480426-0[2,3]
			794285-1[3,7]	—	
			794287-1[3,4]	—	
6	**.720** 18.29	Pre-tin	350641-1	350576-1	1-480276-0
9	**.960** 24.39	Pre-tin	350642-1	350577-1	1-480277-0
		Duplex[1]	350642-2	—	
12	**1.200** 30.49	Pre-tin	350643-1	350578-1	1-480278-0
15	**1.440** 36.58	Pre-tin	350644-1	350579-1	1-480324-0

[1] Duplex Finish — Plated with .000030 [.000762] min. gold in mating area, matte tin-lead on solder tail end over .000050 [.00127] min. nickel underplate on entire contact.
[2] Other mating connectors include vertical, right-angle and surface mount PC Board pin headers.
[3] Used by the disk drive industry.
[4] Surface mount compatible.
[5] Use standard tail for .062 [1.57] thick PC Board.
[6] Use long tail for .125 [3.18] thick PC Board.
[7] Low Mating Force

For complete product information, order Catalog 82181

Products for Industrial & Commercial Applications
Dimensions are shown for reference purposes only.
Dimensions are in inches and millimeters unless otherwise specified. Values in brackets are metric equivalents.
Specifications subject to change.
Technical Support Center
1-800-522-6752
www.tycoelectronics.com

PC Board Right-Angle Pin Headers

PC Board Right-Angle Pin Headers

2, 3 and 4 Circuit, In-Line

Material and Finish:

Contact — Phosphor bronze, pre-tin
Solder tail width .052 [1.32]

2, 3, and 4 Circuit, In-Line

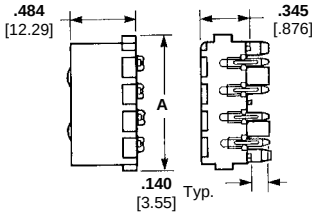

2, 3, and 4 Circuit

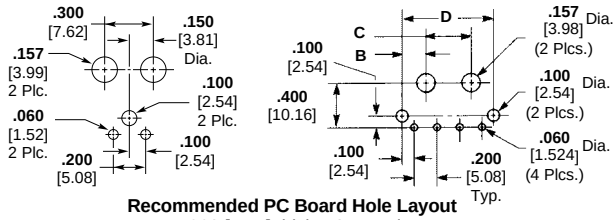

Recommended PC Board Hole Layout
.062 [1.57] thick PC Board

Number of Circuits	Dimensions A	B	C	D	Housing Material	Part Numbers	Mates with Socket Housing Part Numbers
2	**.600** 15.24	—	**.300** 7.62	—	UL94V-2 Nylon Natural Color	794120-1	1-480318-0
3	**.800** 20.32	**.150** 3.81	**.300** 7.62	**.600** 15.24	UL94V-0 Nylon	643488-1	1-480303-0 or 1-480303-9
4	**1.000** 25.40	**.200** 5.08	**.400** 10.16	**.800** 20.32	UL94V-2 Nylon, Natural Color	641737-1[3] 770846-1[1,3]	1-480424-0[2,3]
					UL94V-0 Nylon	1-641737-1[3]	770827-1[2,3]

[1] Surface Mount Compatible. [2] Other mating connectors include a vertical PC board socket header and the insulation displacement connectors (IDC). [3] Used by the disk drive industry.

Dust Covers

Material:

Housing — Polyester, white color
Flammability Rating — UL94V-2

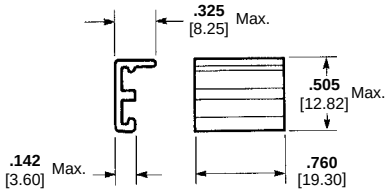

For Feed To Wiring
Part Number 770232-1

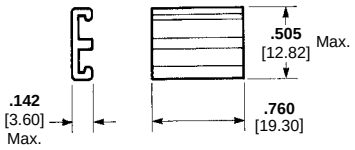

For Feed Through Wiring
Part Number 770233-1

Note: These parts are used with the insulation displacement connectors below

Insulation Displacement Connectors (IDC)

Material:
Housing — Nylon
Contact — Phosphor bronze

Related Product Data:

Used by the disk drive industry.

Performance Characteristics — page 9029

Mating Pin Housings — pages 9034 and 9035

Mating Pin Headers — pages 9037 thru 9039

Technical Documents: pages 9029 and 9080

Product Specifications
108-1077 Commercial MATE-N-LOK PC Board Headers
108-49000 IDC Connectors

Application Specification
114-49001 IDC Connectors

4 Circuit, In-Line

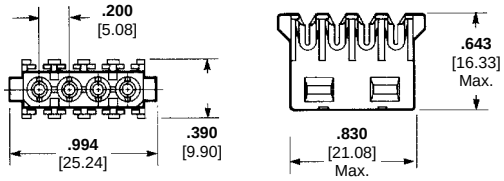

Socket Assembly (Plug)

Wire Size Range AWG [mm²]	Color Code	Finish	Part Numbers UL94V-2	Part Numbers UL94V-0	Mates with Part Numbers
22 [.3]	Red	Pre-tin	770156-2	794036-3	1-480426-0[2] 350211-1 350211-2 350424-1 350424-2 641737-1 1-641737-1 770827-1 770829-1 770846-1
20 [.5]	Yellow	Pre-tin	770156-4	794036-2	
18 [.8]	Orange	Pre-tin	770156-3	794036-1	
16 [1.2]	Blue	Pre-tin	770156-5	794036-4	

[1] Duplex Finish — Plated with .000030 [.000762] min. gold in mating area over .000050 [.00127] min. nickel underplate on entire contact. [2] Pin Housing

Notes: 1. Insulation diameter .095 [2.41] max.
2. Application Tooling:
Power Unit No. **91112-2** (IS 408-7763) uses Head No. **231920-2** (IS 408-9330) and Hand Tool Handle No. **58074-1** (IS 408-6790) uses Head No. **231894-1**(IS 408-3186)

For complete product information, order Catalog 82181

Products for Industrial & Commercial Applications
Dimensions are shown for reference purposes only.
Dimensions are in inches and millimeters unless otherwise specified. Values in brackets are metric equivalents.
Specifications subject to change.
Technical Support Center
1-800-522-6752
www.tycoelectronics.com

PC Board Right-Angle Header with Fix Belt

4 Circuit, In-Line

Material:

Housing — Thermoplastic
Flammability Rating — UL94V-2
Contacts — Copper Alloy

Related Product Data:

Used by the disk drive industry

Technical Document:

Product Specification
108-5155

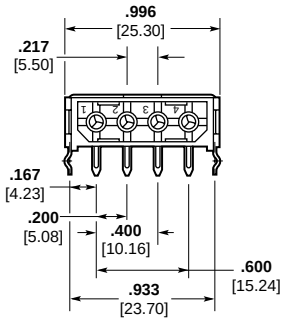

Part Number 174552-1

Notes: Mates with socket housing (plug) Part Number 1-480424-0 on page 9034. Other mating connectors include a vertical PC board socket header and the insulation displacement connectors (IDC).

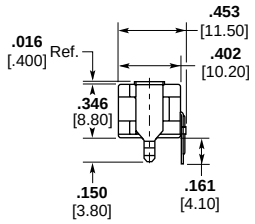

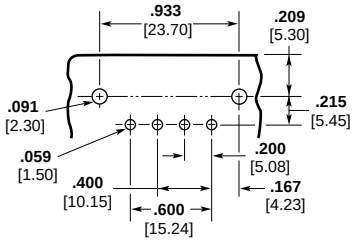

Recommended PC Board Hole Layout
.062 [1.57] thick PC Board

PC Board Right-Angle Headers with Fix Belt

Reverse Polarization

4 Circuit, In-Line

Material:

Housing — Nylon
Flammability Rating — UL94V-2
Contacts — Tin plated, Copper alloy

Related Product Data:

Used by the disk drive industry

Technical Document:

Product Specification
108-5155

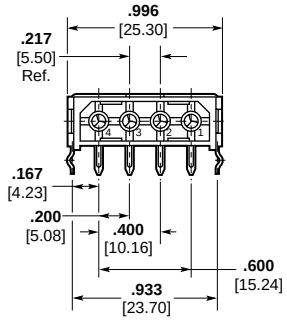

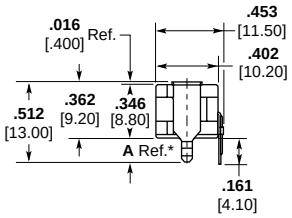

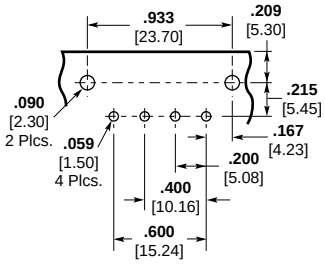

Part Numbers	A Dim.*	Description
174804-1	**.150** 3.80	Long Clamp with Kink
174804-2	**.150** 3.80	Clamp without Kink
174804-3	**.116** 2.95	Short Clamp

Part Number 174804*

Recommended PC Board Hole Layout
.062 [1.57] thick PC Board

For complete product information, order Catalog 82181

Notes: Mates with socket housing (plug) Part Number 1-480424-0 on page 9034. Other mating connectors include a vertical PC board socket header and the insulation displacement connectors (IDC).

Products for Industrial & Commercial Applications
Dimensions are shown for reference purposes only.
Dimensions are in inches and millimeters unless otherwise specified. Values in brackets are metric equivalents.
Specifications subject to change.
Technical Support Center
1-800-522-6752
www.tycoelectronics.com

Product Facts

- **Available in 2, 3 and 9 circuit configurations for panel mounting; 4 and 9 circuit configurations for free hanging applications**
- **Standard natural nylon housings**
- **Housings fully polarized**
- **Contacts fully protected in housings**
- **Contacts accept wire size range 20-10 AWG [.5-5.0 mm²] with insulation diameters from .100 [2.54] to .180 [4.57]**
- **Low insertion/extraction forces**
- **Dual locking lances promote optimum contact stability**
- **Extraction tool removes both pins and sockets**
- **Contacts are on .240 [6.09] centerline spacing**
- **Not for interrupting current**
- **Recognized under the Component Program of Underwriters Laboratories Inc., File No. E28476**
- **Certified by Canadian Standards Association, File No. LR 7189A**

Performance Characteristics:

The .140 MATE-N-LOK Connector performance characteristics found on this page are based on free hanging and panel mount connectors, loaded with contacts crimped on stranded wire.

Dielectric Withstand Voltage — 3.0 KVAC between adjacent circuits

Insulation Resistance — 1000 megohms minimum initial between adjacent circuits

Voltage Rating — 250V AC or DC

Connector Mating — 4.5 lb. max. per circuit

Connector Unmating — .8 lb. min. per circuit

Contact Retention — 30 lb. min.

Durability — 25 cycles, mating and unmating

Thermal Shock — −55°C to 85°C

Temperature-Humidity Cycling — 25°C to 65°C at 95% RH

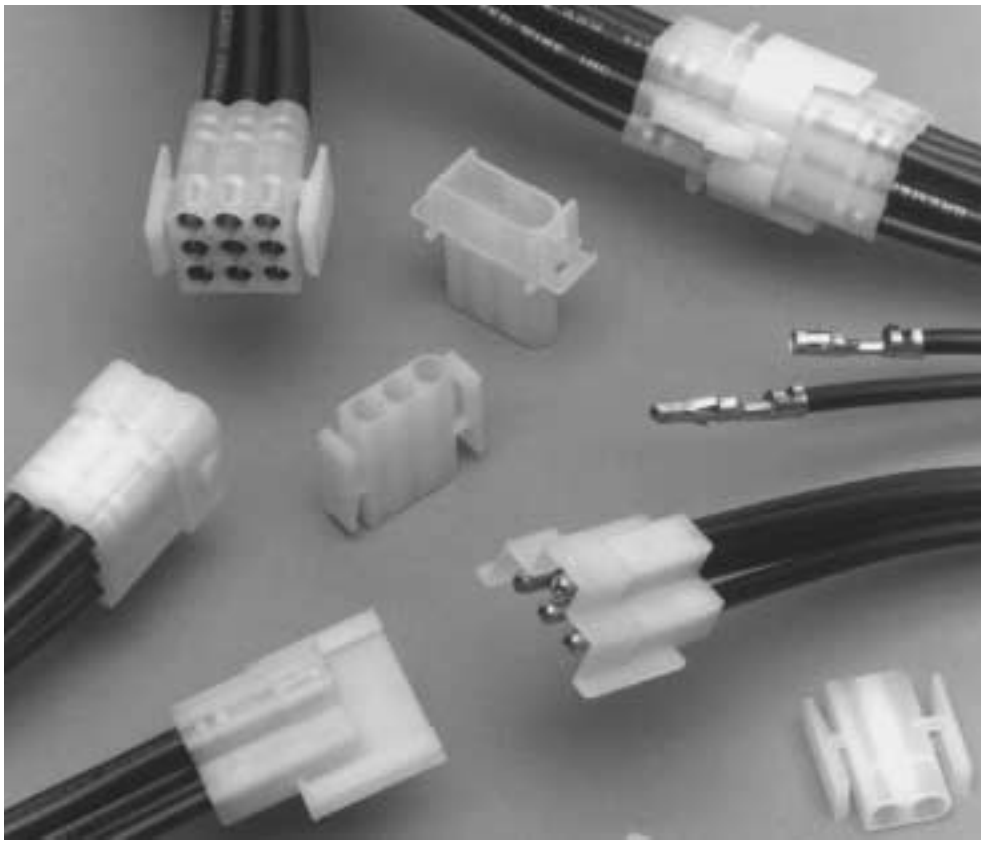

Maximum Current Maximum current rating of .140 MATE-N-LOK connectors is limited by the maximum operating temperature of the housings which is 105°C and the temperature rise of the contacts which is 30°C. There are several variables which have a direct effect on this maximum current-carrying capability for a given connector and must be considered for each application. These variables are:

Wire Size Larger diameter wire will carry more current since it has less internal resistance to current flow and thus generates less heat. Longer wire lengths also enhance current carrying capabilities since the wire conducts heat away from the connector.

Connector Size In general, the more circuits in a connector, the less current can be carried.

Ambient Temperature The higher the ambient temperature, the less current can be carried in any given connector.

Technical Documents:

Product Specification
108-1032 .140 Diameter MATE-N-LOK Connectors

Application Specification
114-1007 .140 Diameter MATE-N-LOK Contacts

Wire Size		Termination Resistance		Contact Crimp Tensile Force	
AWG	mm²	Test Current (Amps)	Resistance Milliohms (Max. Init.)	Force (Min.) lbs.	Force (Min.) N
20	.5	4.5	3.0	20	89
18	.8	6	2.5	30	133
16	1.2	8	2.5	45	200
14	2.0	10	2.0	50	222
12	3.0	12	1.5	60	267
10	5.0	14	1.5	65	289

Note: This is the total resistance between wire crimps of a mated pin and socket.

Current Rating Verification for 30°C Maximum Temperature Rise 100% Energized

Wire-to-Wire

.140 MNL Calculated Current Table

Number of Circuits	Wire AWG 10	12	14	16	18	20
2	28.00	23.00	18.50	15.00	13.50	10.50
3	25.00	21.00	17.00	13.50	12.00	9.50
9	18.50	15.00	12.00	10.00	9.00	7.00

Values are based on initial Temperature Rise versus Current Testing and are intended to be a guide in the selection of a connector family. All applications should be tested by the end user. The values listed are per circuit for fully loaded housings being 100% energized. **Note:** All combinations were not tested, and this chart contains interpolated and extrapolated values.

Minimum Wire Lengths for T-Rise vs. Current Testing See page 9042.

Note: If wire lengths used are less than those listed, the current carrying ability of the system will be reduced due to less heat being conducted away from the connector. The customer should fully test all applications.

Contacts

Product Specifications:

Pin diameter—.140 [3.57]
Stock thickness—.014 [.357]

Related Product Data:

Performance Characteristics—page 9041
Keying Plug—none
Housings— pages 9042 and 9043
Application Tooling— pages 9081, 9082 and 9084

Technical Documents: pages 9041 and 9080

Product Specification
108-1032 .140 Diameter MATE-N-LOK Connectors
Application Specification
114-1007 .140 Diameter MATE-N-LOK Contacts

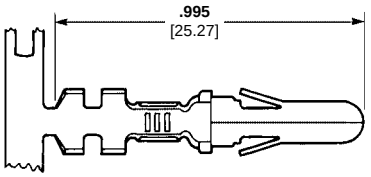

Pin

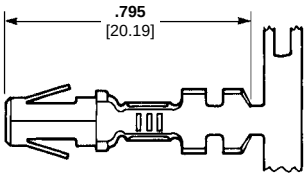

Socket

Wire Size Range AWG [mm²]	Ins. Dia. Range	Material & Finish	Contact Part Numbers				HDM Applicator Part Numbers	Hand Tool Part Numbers
			Pin		Socket			
			Strip Form	Loose Form	Strip Form	Loose Form		
20-14 [.5-2.0]	.100-.180 2.54-4.5	Brass. pre-tin	61627-1	350389-1	61626-1	350388-1	567306-1 567306-2 567306-3	90247-1
		Phos. Brz., pre-tin	61627-2	—	61626-2	—		
14-10 [2.0-5.0]	.100-.180 2.54-4.5	Brass. pre-tin	350201-1	350391-1	350200-1	350390-1	567309-1 567309-2 567309-3	69710-1[2]
		Phos. Brz., pre-tin	350201-2	350391-2	350200-2	350390-2		

[1] HDM Applicator part number ending in -1 is used on AMPOMATOR CLS Machine with T or G Terminators, -2 is used on AMP-O-LECTRIC Model K Machine, -3 is used on AMP-O-LECTRIC Model G Machine. See page 9084 for further information.
[2] Hand Tool No. **69710-1** uses die set No. **58374-1** for 14-12 AWG and No. **58373-1** for 10 AWG.


Contact Extraction Tool
Part Number 453300-1
IS 408-9569

Housings, Free Hanging

Product Specification:

Centerline spacing—.240 [6.09]

Material:

Nylon, natural color
Flammability Rating—UL94V-2
Cavity Identification
(Rear View)

4 Circuit

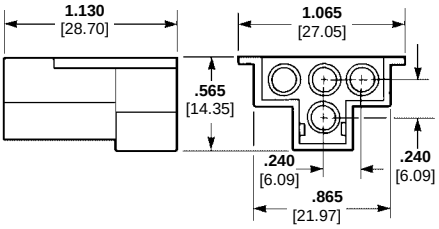

Pin Housing (Cap)
Part Number 1-480512-0
Part Number 794700-1 **(Black Color)**

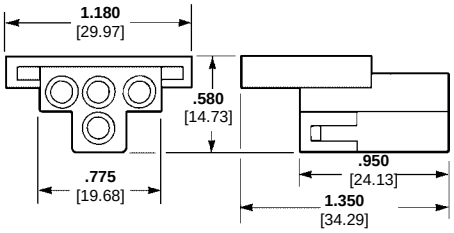

Socket Housing (Plug)
Part Number 1-480510-0

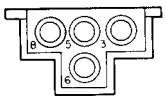

Cap

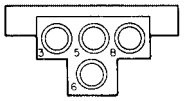

Plug

9 Circuit, Matrix

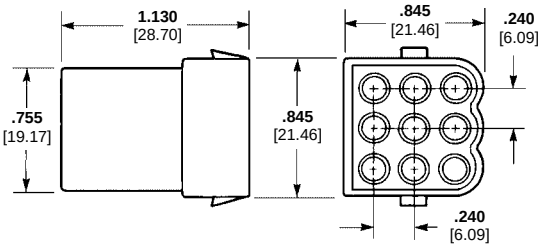

Pin Housing (Cap)
Part Number 1-480586-0

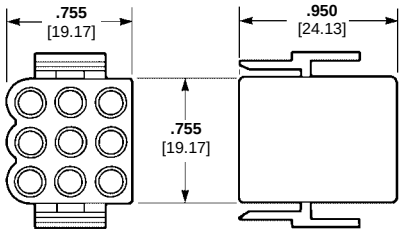

Socket Housing (Plug)
Part Number 1-480585-0

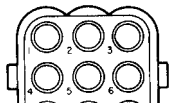

Cap

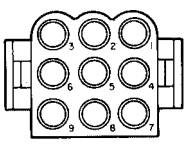

Plug

For complete product information, order Catalog 82181

Products for Industrial & Commercial Applications
Dimensions are shown for reference purposes only.
Dimensions are in inches and millimeters unless otherwise specified. Values in brackets are metric equivalents.
Specifications subject to change.
Technical Support Center
1-800-522-6752
www.tycoelectronics.com

Housings, Panel Mount

Product Specification:

Centerline spacing—.240 [6.09]

Material:

Housing—Nylon, natural color
Flammability Rating—UL94V-2
Cavity Identification
(Rear View)

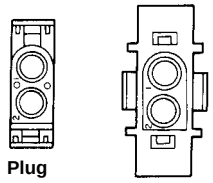

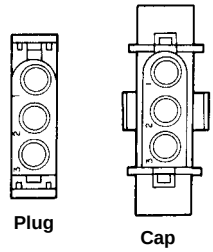

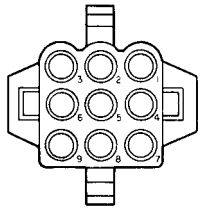

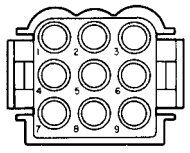

Related Product Data:

Performance Characteristics—page 9041
Keying Plug—none
Contacts— page 9042

Technical Documents: pages 9041 and 9080

Product Specification
108-1032 .140 Diameter MATE-N-LOK Connectors

Application Specification
114-1007 .140 Diameter MATE-N-LOK Contacts

2 and 3 Circuit, In-Line

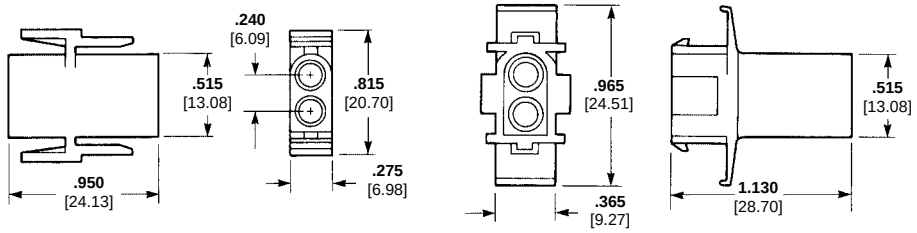

Socket Housing (Plug)
Part Number 1-350344-0
Part Number 794699-1 **(Black Color)**

Pin Housing (Cap)
Part Number 1-350345-0

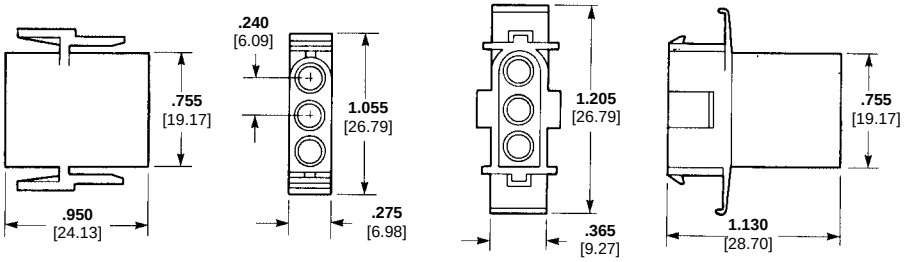

Socket Housing (Plug)
Part Number 1-350346-0

Pin Housing (Cap)
Part Number 1-350347-0
Part Number 794061-1 **(Black Color)**

9 Circuit, Matrix

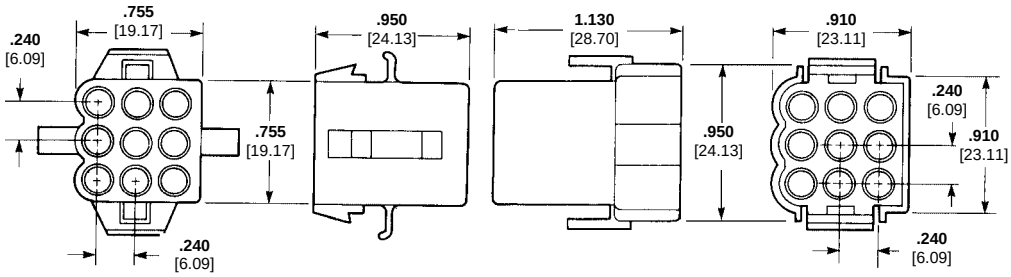

Socket Housing (Plug)
Part Number 1-480672-0

Pin Housing (Cap)
Part Number 1-480673-0
Part Number 794683-1 **(Black Color)**

Recommended Panel Cutouts

View is from housing entry side

2 and 3 Circuit

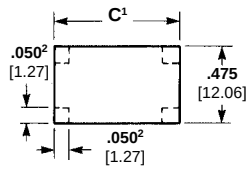

[1] 2 Circuit-.725 [18.42]
3 Circuit- .965 [24.51]
[2] .050 x .050 [1.27-1.27] tabs in corners of outlet are optional to reduce housing float in panel.

9 Circuit

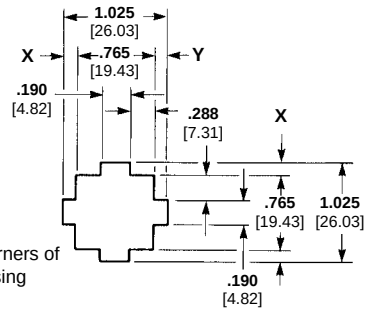

Notes:
1. Panel thickness .040-.070 [1.02-1.78].
2. "X" and "Y" dimensions must be within .005 [.127] of each other.
3. Panel should be punched so that the housing enters the panel in the same direction as the punch for ease of assembly.

For complete product information, order Catalog 82181

Product Facts

- **Polarized**
- **Cavity identification**
- **Low contact-mating force**
- **Dual locking lances**
- **Detent and positive locking**
- **Contacts available in brass and phosphor bronze with tin and gold plating**
- **Panel-mounting and free-hanging styles**
- **"F" crimp contacts**
- **Applicator and hand tool available**
- **Economical commercial-grade connectors**
- **Compatible with high-speed application machinery and competitive soft shells**
- **Wire range from 24 to 14 AWG [0.2 to 2 mm²]**
- **Accepts wires with insulation diameters as large as .180 [4.57]**
- **Housings available in 1 to 15 positions**
- **.093 plug and receptacle housings accept pin or socket contacts. The preferred convention is to use socket contacts with receptacle housings**
- **Not for interrupting current**
- **Recognized under the Component Program of Underwriters Laboratories Inc., File No. E28476**
- **Certified by Canadian Standards Association, File No. LR 7189**

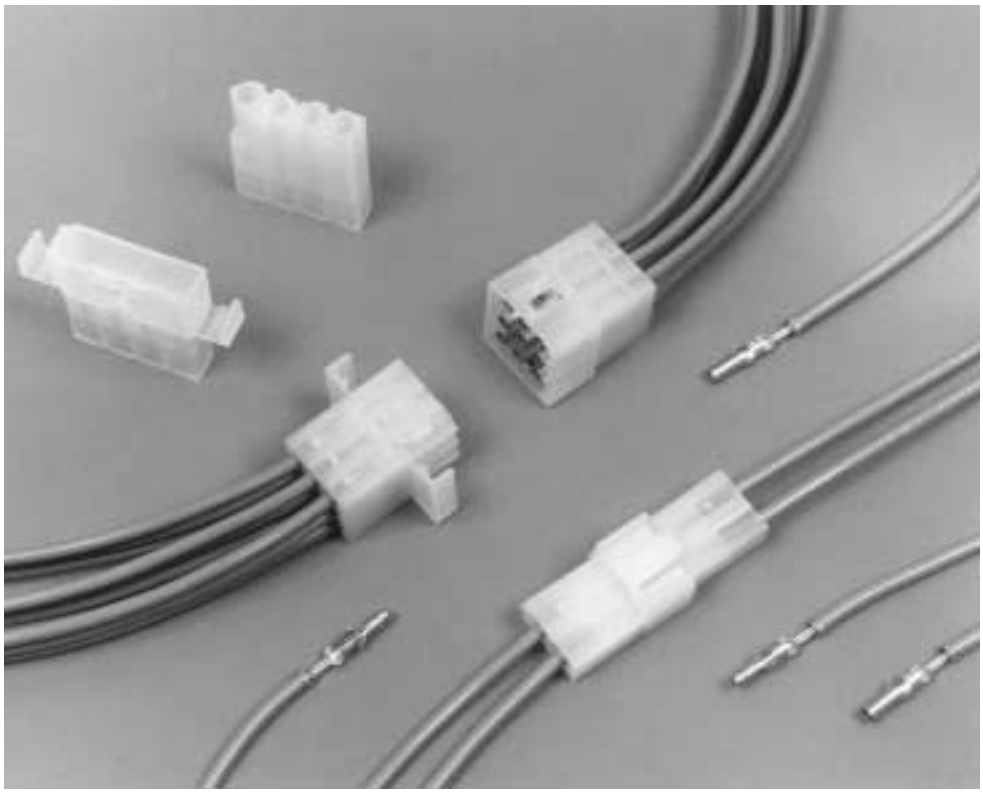

Performance Characteristics:

The .093 Commercial Pin and Socket Connectors performance characteristics found below are based on free hanging and panel mount connectors, loaded with contacts crimped on stranded wire.

Thermal Shock — -55°C to +105°C

Temperature-Humidity Cycling — +25°C to +65°C at 90–95% RH

Corrosion — 48 hr. at 5% salt concentration

Vibration — 10-55-10 cycles per minute at .06 [1.52] total excursion

Physical Shock — 18 shocks, 50 Gs sawtooth in 11 milliseconds

Durability — 50 mating cycles

Dielectric Withstanding Voltage — 1.0 kVAC

Insulation Resistance — 1000 megohms min. initial

Voltage Rating — 250 V AC or DC

Connector Mating — 2.5 lb. [11.1 N] max. per contact

Connector Unmating — 1.5 lb. [6.7 N] min. per contact

Contact Retention — 10 lb. [44.5 N] min.

Technical Documents:

Product Specification
108-1038

Application Specification
114-49000

For complete product information, order Catalog 82181

Products for Industrial & Commercial Applications

Dimensions are shown for reference purposes only.

Dimensions are in inches and millimeters unless otherwise specified. Values in brackets are metric equivalents.

Specifications subject to change.

Technical Support Center
1-800-522-6752
www.tycoelectronics.com

Contacts

Product Specification:

Pin Diameter—.093 [2.36]

Material:

.010 [0.25] Stock Thickness

Pin and socket contacts can be used in either plug or receptacle housings.

Related Product Data:

Performance Characteristics— page 9044

Housings—
.198 [5.03] Centerline— pages 9046 and 9047
.250 [6.35] Centerline— pages 9048 and 9049

Panel Cutouts—
.250 [6.35] Centerline Housings— page 9048

Application Tooling— pages 9081, 9082 and 9084

Technical Documents: pages 9044 and 9080

Product Specification
108-1038

Application Specification
114-49000



Contact Insertion Tool (For Pins and Sockets)
Part Number 91002-1
IS 408-7347



Contact Extraction Tool
Part Number 318837-1
IS 408-4375

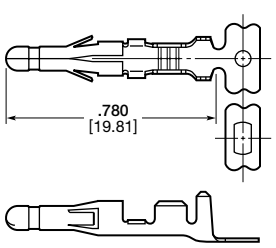

Pin

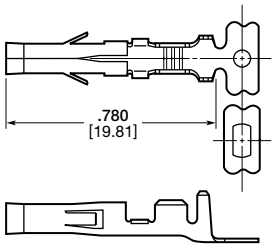

Socket

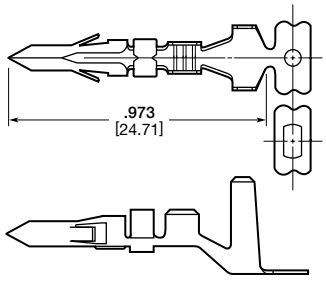

Pin
Part Number 770385-1[3]

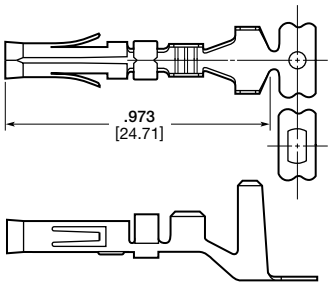

Socket
Part Number 770383-1[3]

Wire Size AWG	Wire Size mm²	Ins. Dia.	Material & Finish	Contact Part Numbers Pin Strip Form	Pin Loose Form	Socket Strip Form	Socket Loose Form	HDM Applicator Part Numbers	Hand Tool Part Numbers
24–18	0.2–0.9	**.110** 2.79	Brass, Pre-tin	350418-1	770147-1	350417-1	770146-1	466656-1[5] 466656-2[5] 466656-3[5]	90872-1
			Brass, Gold[2]	—	—	350417-3[2]	770146-3[2]		
			Brass Select Gold[1]	350418-5[1]	770147-5[1]	350417-5[1]	770146-5[1]		
20–14	0.6–2	**.140** 3.56	Brass, Pre-tin	350416-1	770145-1	350415-1	770144-1	466878-1[5] 466878-2[5] 466878-3[5]	90871-1
			Brass, Select Gold[1]	350416-5[1]	770145-5[1]	350415-5[1]	770144-5[1]		
			Phos. Brz., Pre-tin	—	—	350415-6	770144-6		
		.180 4.57	Brass, Pre-tin	770530-1[4]	—	770529-1[4]	—	567337-3[6] 567337-4[6] 567337-6[6]	—
18–14 or 2 (18)	0.8–2 or 2 (0.8–0.9)	**.180** 4.57 (per wire)	Brass, Pre-tin	770385-1[3]	—	—	—	567273-2[7] 567273-3[7] 567273-4[7]	—
			Phos. Brz., Pre-tin	—	—	770383-1[3]	—		

[1] Select Gold — .000030 [.000762] min gold in mating area over .000050 [.00127] min nickel.
[2] Gold — .000050 [.00127] min gold in mating area, overall gold flash over .000050 [.00127] min nickel.
[3] These contacts have a .0125 [.318] stock thickness and accept two wires, each with maximum .180 [4.57] insulation diameters. They can be used **only** with the following housing part numbers: 770364-1, 770365-1, 770450-1, 770451-1, 770452-1, and 770453-1 (see page 9049).
[4] Contact length is .875 [22. 23]
[5] HDM Applicator part number ending in -1 is used on AMPOMATOR CLS Machine with T or G Terminators, -2 is used on AMP-O-LECTRIC Model K Machine, -3 is used on AMP-O-LECTRIC Model G Machine. See page 9084 for further information.
[6] HDM Applicator part number ending in -3 is used on AMPOMATOR CLS Machine with T or G Terminators, -4 is used on AMP-O-LECTRIC Model K Machine, -6 is used on AMP-O-LECTRIC Model G Machine. See page 9084 for further information.
[7] HDM Applicator part number ending in -3 is used on AMPOMATOR CLS Machine with T or G Terminators, -2 is used on AMP-O-LECTRIC Model K Machine, -4 is used on AMP-O-LECTRIC Model G Machine. See page 9084 for further information.

Note: Phosphor bronze contacts should be used in high-temperature/humidity cycling applications.

For complete product information, order Catalog 82181

Housings, Free Hanging or Panel Mount

Product Specification:

Centerline spacing—.198 [5.03]

Material:

Housing—Nylon, natural color

Flammability Rating—UL94V-2

Related Product Data:

Contacts—page 9045

Technical Document:

Product Specification
108-1038

1 Circuit

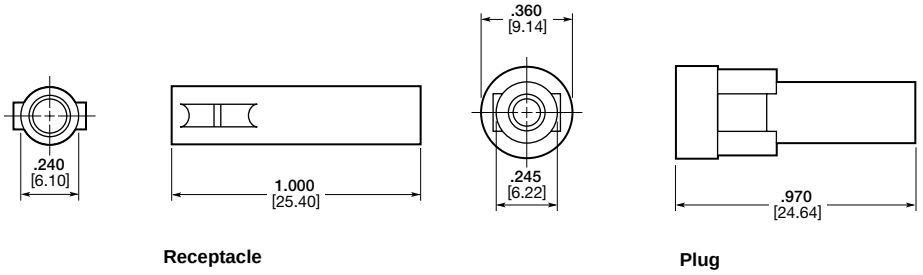

2, 3, 4 and 6 Circuit, In-Line

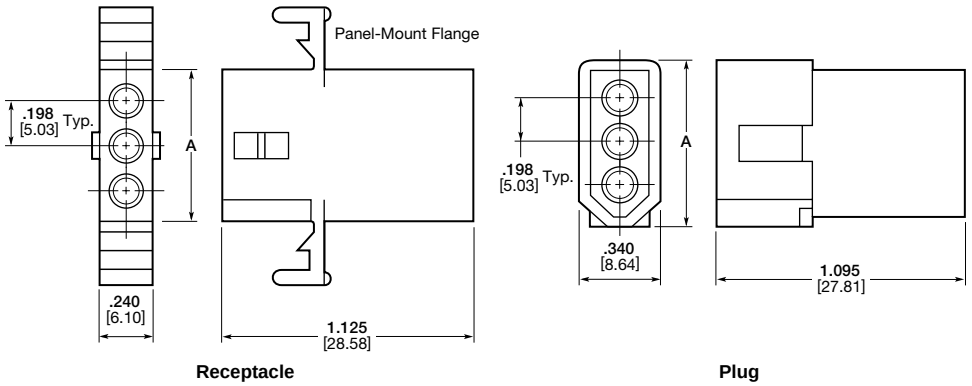

No. of Circuits	A Dim.		Receptacle Part Numbers				Plug Part Numbers	
			Panel-Mount		Free-Hanging			
	Receptacle	Plug	Without Detents	With Detents	Without Detents	With Detents	Panel-Mount	Free-Hanging
1	—	—	—	—	—	770063-1	—	770064-1
2	**.540** 13.72	**.640** 16.26	—	770066-1[1,5]	—	770065-1[1,5] 770266[1,3,5]	770068-1[1]	770069-1[1]
3	**.670** 17.02	**.770** 19.56	—	770071-1	—	770070-1 770264-1[3]	770073-1	770074-1
4 (In-Line)	**.870** 22.10	**.970** 24.64	—	770076-1	—	770075-1	770077-1	770078-1
4 (Matrix)	**.443** 11.25	**.540** 13.71	—	—	—	770843-1	—	770842-1
5	**1.070** 27.18	**1.170** 29.72	—	—	—	770083-1 794015-1[3]	—	770084-1
6 (In-Line)	**1.268** 32.21	**1.378** 35.00	—	—	—	770782-1[4]	—	770892-1[4]
6 (Matrix)	**.435** 11.05	**.535** 13.59	770085-1	770087-1	770088-1	770086-1	770089-1	770090-1
9	**.670** 17.02	**.770** 19.56	770091-1	770093-1	770094-1	770092-1	770095-1[2] 770108-1	770096-1
12	**.870** 22.10	**.970** 24.64	770097-1	770099-1	770100-1	770098-1	770101-1	770102-1
15	**1.070** 27.18	**1.170** 29.72	770103-1	—	770105-1	—	770106-1	770107-1

[1] .248 [6.30] centerline.
[2] Mounting ears at wire end.
[3] Tool removable.
[4] Positive lock.
[5] 600V AC or DC

For complete product information, order Catalog 82181

Products for Industrial & Commercial Applications
Dimensions are shown for reference purposes only.
Dimensions are in inches and millimeters unless otherwise specified. Values in brackets are metric equivalents.
Specifications subject to change.
Technical Support Center
1-800-522-6752
www.tycoelectronics.com

Housings, Free Hanging or Panel Mount

Product Specification:

Centerline spacing—.198 [5.03]

Material:

Housing—Nylon, natural color

Flammability Rating—UL94V-2

Related Product Data:

Contacts—page 9045

Technical Document:

Product Specification
108-1038

5 Circuit, In-Line

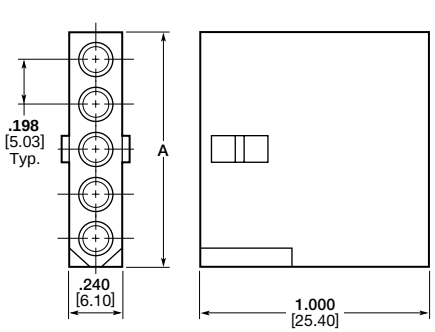

Receptacle

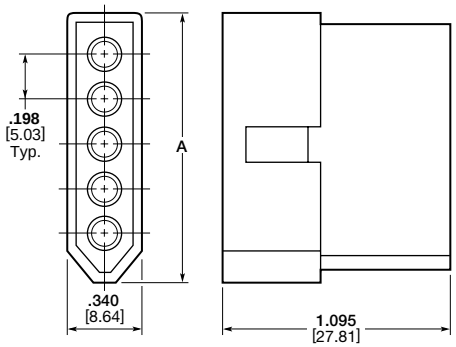

Plug

4, 6, 9, 12, and 15 Circuit, Matrix

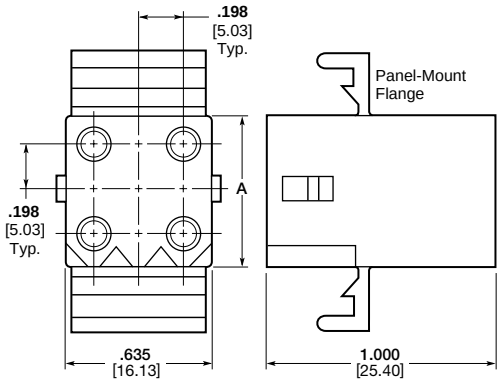

Receptacle

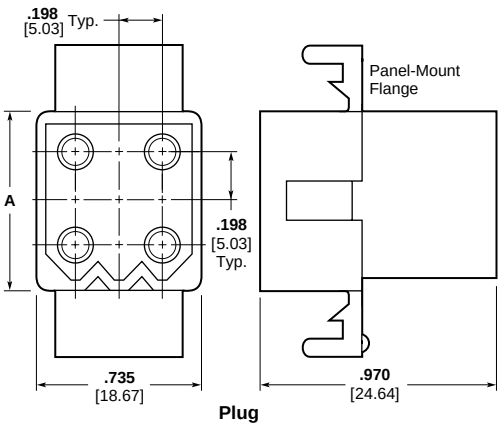

Plug

Housings, Free Hanging or Panel Mount

Product Specification:

Centerline spacing—.250 [6.35]

Material:

Housing—Nylon, natural color
Flammability Rating—UL94V-2
Voltage Rating—600V AC or DC

Related Product Data:

Contacts—page 9045

Technical Document:

Product Specification
108-1038

3 Circuit, In-Line

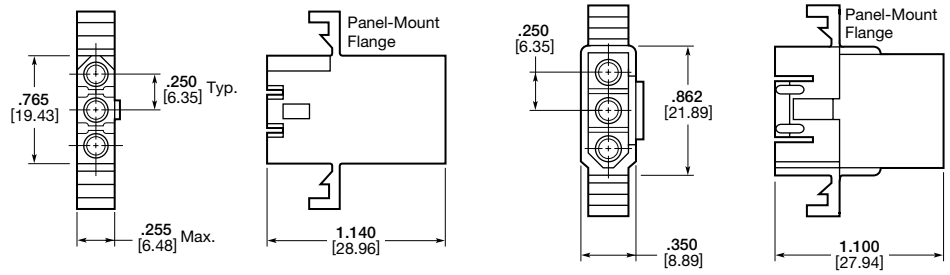

Receptacle **Plug**

4 Circuit, In-Line

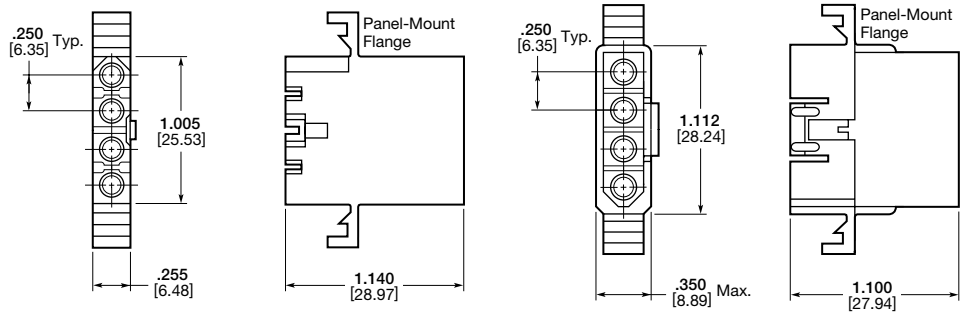

Receptacle **Plug**

6 Circuit, Matrix

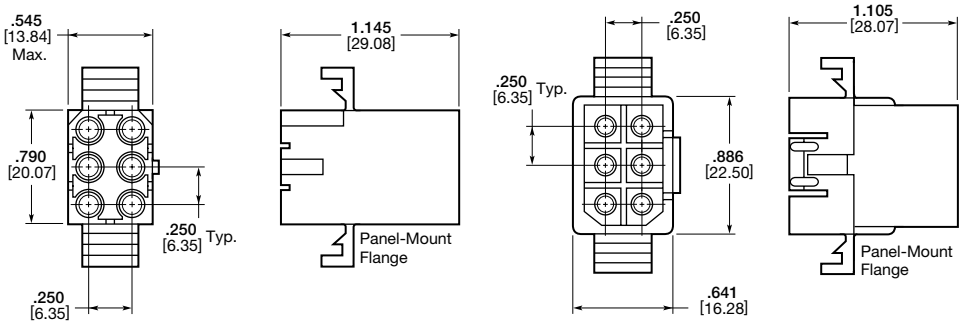

Receptacle **Plug**

Recommended Panel Cutouts

Maximum panel thickness is .062 [1.57].

Note: The panel should be punched so that the housing enters in the same direction as the punch.

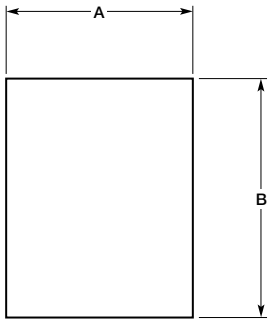

No. of Circuits	Receptacle Part Numbers		Plug Part Numbers	
	Panel-Mount	Free-Hanging	Panel-Mount	Free-Hanging
3	770269-1 770771-1[1]	770339-1	770338-1	770276-1
4	770329-1	770337-1	770330-1	770336-1
6	770372-1	770360-1	770373-1	770361-1

[1] Pre-bent mounting ears.

No. of Circuits	Panel Cutout Dimensions			
	Receptacle		Plug	
	A	B	A	B
3	**.310** 7.87	**.920** 23.37	**.365** 9.27	**1.022** 25.96
4	**.310** 7.87	**1.168** 29.67	**.365** 9.27	**1.270** 32.26
6	**.608** 15.44	**.946** 24.03	**.658** 16.71	**1.048** 26.62

For complete product information, order Catalog 82181

Products for Industrial & Commercial Applications
Dimensions are shown for reference purposes only.
Dimensions are in inches and millimeters unless otherwise specified. Values in brackets are metric equivalents.
Specifications subject to change.
Technical Support Center
1-800-522-6752
www.tycoelectronics.com

Housings, Free Hanging or Panel Mount

Product Specification:

Centerline spacing—.250 [6.35]

Material:

Housing—Nylon, natural color
Flammability Rating—UL94V-2
Voltage Rating—600V AC or DC

Related Product Data:

Contacts—page 9045

Technical Document:

Product Specification
108-1038

Dual Wire

2 Circuit, In-Line

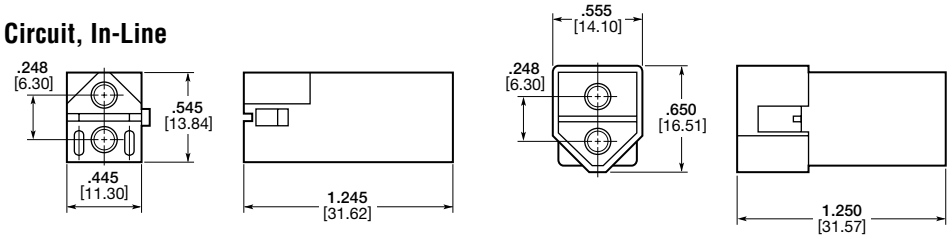

Receptacle **Plug**

3 Circuit, In-Line

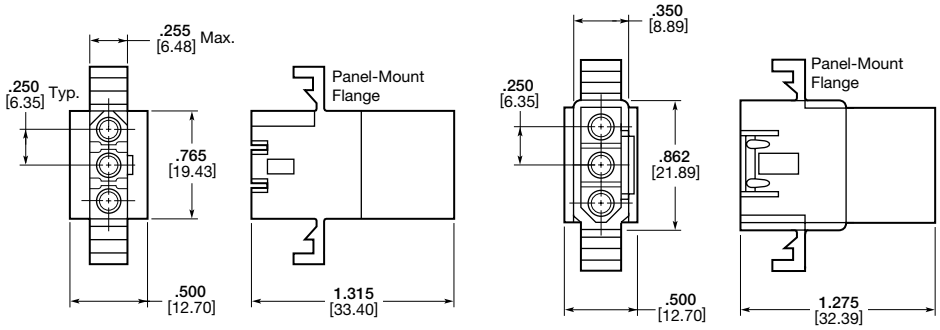

Receptacle **Plug**

No. of Circuits	Receptacle Part Numbers		Plug Part Numbers	
	Panel-Mount	Free-Hanging	Panel-Mount	Free-Hanging
2	—	770364-1[1]	—	770365-1[1]
3	770453-1	770451-1	770452-1	770450-1

[1] .248 centerline.

Positive Lock

2, 3 and 4 Circuit, In-Line

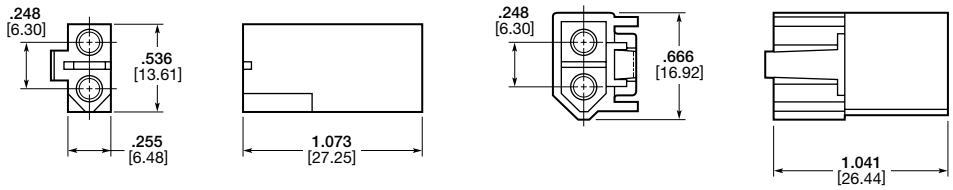

Receptacle **Plug**

No. of Circuits	Receptacle Part Numbers	Plug Part Numbers
	Free-Hanging	Free-Hanging
2	770424-1[1]	770425-1[1]
3	770785-1	770783-1
4	770784-1	770810-1

[1] .248 centerline.

For complete product information, order Catalog 82181

Products for Industrial & Commercial Applications
Dimensions are shown for reference purposes only.
Dimensions are in inches and millimeters unless otherwise specified. Values in brackets are metric equivalents.
Specifications subject to change.
Technical Support Center
1-800-522-6752
www.tycoelectronics.com

Product Facts

- **One molded piece, secondary locking plug and cap housing assemblies**
- **Three-point stabilization to provide consistent terminal position**
- **Fully polarized to provide proper plug-to-cap mating**
- **Lanceless contacts for virtually tangle-free handling**
- **Toolless contact removal**
- **Tin or duplex gold plated contacts**
- **Available in 2 thru 24 circuit sizes, wire-to-wire and wire-to-board**
- **Mates with standard Mini Universal MATE-N-LOK headers and connectors**
- **Contacts available in strip and loose piece**
- **Polarized housing available in UL 94V-0 flammability rated material**
- **Mini Universal MATE-N-LOK 2 pins and sockets can be intermixed in Mini Universal MATE-N-LOK II housings**
- **Mini Universal MATE-N-LOK 2 pins and sockets can not be used in standard Mini Universal MATE-N-LOK housings**
- **Contacts accept wire size range 30-16 AWG [.05-1.2 mm²]**
- **.163 [4.14] centerline spacing**
- **Not for interrupting current**
- **Recognized under the Component Program of Underwriters Laboratories Inc., File No. E28476**
- **Submitted for testing by VDE**

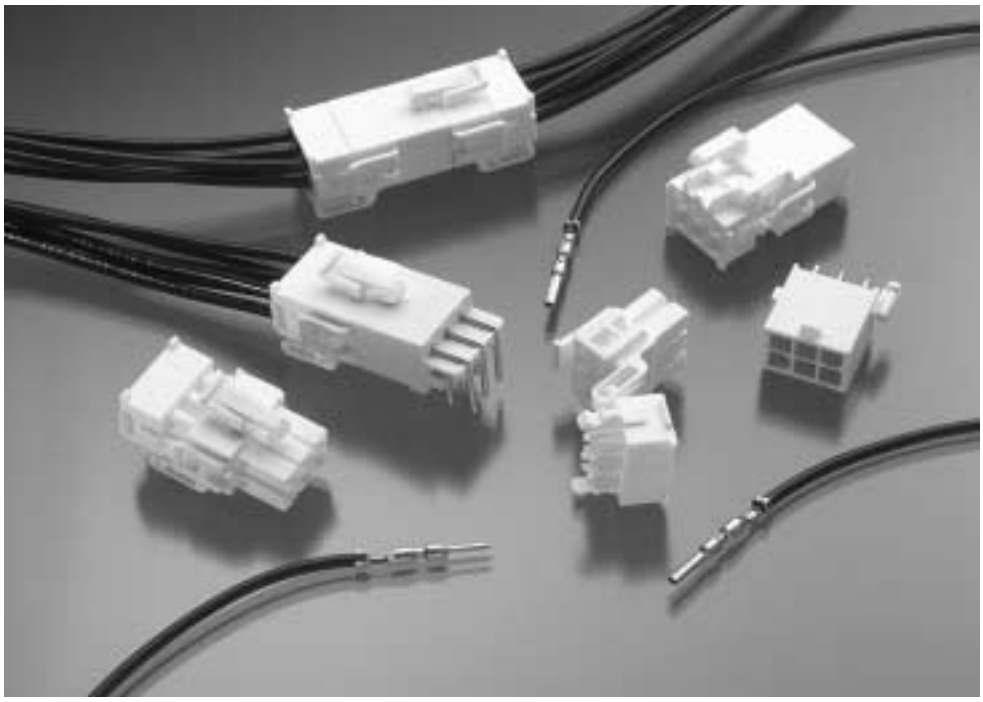

Performance Characteristics:

The Mini-Universal MATE-N-LOK 2 Connector performance characteristics found below are based on free hanging connectors, loaded with contacts crimped on stranded wire.

Low Level Termination Resistance— 20 milliohms max. total resistance between wire crimps of a mated pin and socket

Dielectric Withstanding Voltage— 1500 V AC or DC between adjacent circuits at sea level

Insulation Resistance—100 megohms minimum between adjacent circuits

Voltage Rating— 600V AC or DC

Contact Retention— 20 lb. min. per contact

Durability— 25 cycles, mating and unmating

Current Rating— up to 10.5 amps per circuit; 2 position

Mating Force— 0.75 lb. max. per circuit

Unmating Force— 0.25 lb. minimum per circuit

Wire Size		Termination Resistance		Contact Crimp Tensile Force	
AWG	mm²	Test Current (Amps)	Resistance Milliohms (Max. Init.)	Force (Min.) lbs.	Force (Min.) N
30	.05	—	—	—	—
28	.08	—	—	—	—
26	.12	—	—	4	18
24	.2	—	—	—	—
22	.3	—	—	11	49
20	.5	—	—	13	58
18	.8	—	—	15	67
16	1.2	—	—	18	80

Technical Documents:

Product Specifications
108-1693 Mini-Universal MATE-N-LOK 2 Connectors
108-1694 Mini-Universal MATE-N-LOK 2 Headers

Application Specification
114-1111 Mini-Universal MATE-N-LOK 2 Connectors

Instruction Sheet
408-3393 Mini-Universal MATE-N-LOK 2 Connectors

Mini-Universal MATE-N-LOK 2 connectors also will withstand the following tests:

Housing Lock Strength— 6 lb. min.

Thermal Shock— −20°C to +105°C

Temperature-Humidity Cycling— 25°C to 65°C at 95% RH

Vibration— 10-55-10 cycles per minute at .06 inch total excursion

Physical Shock— 18 drops, 50 G half-sine at 11 milliseconds

Mini-Universal MATE-N-LOK 2 Connector Mating Combinations

Connector Part Numbers					Mating Connector Part Numbers				
					PC Board Pin Headers[4]				
						Vertical			Right-Angle
Number of Circuits	Flammability Rating	Style	Plug[1] Housing Part Numbers	Cap[1] Housing Part Numbers	Plating	With Drain Holes	Without Drain Holes	Blindmate	Board Lock
2	UL94V-2	In-line	794237-1	794238-1	—	—	—	—	—
	UL94V-0	In-line	794184-1	794185-1	Tin-Lead[3]	770166-1	770872-1	—	770966-1
					Duplex[2]	770166-2	770872-2	—	770966-2
3	UL94V-2	In-line	794239-1	794240-1	—	—	—	—	—
	UL94V-0	In-line	794186-1	794187-1	Tin-Lead[3]	770170-1	770873-1	—	770967-1
					Duplex[2]	770170-2	770873-2	—	770967-2
4	UL94V-2	Dual Row	794241-1	794242-1	—	—	—	—	—
	UL94V-0	Dual Row	794188-1	794189-1	Tin-Lead[3]	770174-1	770874-1	794325-1	770968-1
					Duplex[2]	770174-2	770874-2	794325-2	770968-2
6	UL94V-2	Dual Row	794243-1	794244-1	—	—	—	—	—
	UL94V-0	Dual Row	794190-1	794191-1	Tin-Lead[3]	770178-1	770875-1	794326-1	770969-1
					Duplex[2]	770178-2	770875-2	794326-2	770969-2
8	UL94V-2	Dual Row	794245-1	794246-1	—	—	—	—	—
	UL94V-0	Dual Row	794192-1	794193-1	Tin-Lead[3]	794065-1	794073-1	794327-1	770970-1
					Duplex[2]	794065-2	794073-2	794327-2	770970-2
9	UL94V-2	Matrix	794247-1	794248-1	—	—	—	—	—
	UL94V-0	Matrix	794194-1	794195-1	Tin-Lead[3]	770182-1	770876-1	794130-1	—
					Duplex[2]	770182-2	770876-2	794130-2	—
10	UL94V-2	Dual Row	794249-1	794250-1	—	—	—	—	—
	UL94V-0	Dual Row	794196-1	794197-1	Tin-Lead[3]	770743-1	770858-1	794328-1	770971-1
					Duplex[2]	770743-2	770858-2	794328-2	770971-2
12	UL94V-2	Matrix	794253-1	794254-1	—	—	—	—	—
		Dual Row	794251-1	794252-1	—	—	—	—	—
	UL94V-0	Matrix	794200-1	794201-1	Tin-Lead[3]	770186-1	794040-1	794329-1	—
					Duplex[2]	770186-2	794040-2	794329-2	—
		Dual Row	794198-1	794199-1	Tin-Lead[3]	794066-1	770621-1	—	770972-1
					Duplex[2]	794066-2	770621-2	—	770972-2
14	UL94V-2	Dual Row	794255-1	794256-1	—	—	—	—	—
	UL94V-0	Dual Row	794202-1	794203-1	Tin-Lead[3]	794067-1	794074-1	—	770973-1
					Duplex[2]	794067-2	794074-2	—	770973-2
15	UL94V-2	Matrix	794257-1	794258-1	—	—	—	—	—
	UL94V-0	Matrix	794204-1	794205-1	Tin-Lead[3]	770190-1	770859-1	794330-1	—
					Duplex[2]	770190-2	770859-2	794330-2	—
16	UL94V-2	Dual Row	794259-1	794260-1	—	—	—	—	—
	UL94V-0	Dual Row	794206-1	794207-1	Tin-Lead[3]	794068-1	794075-1	—	770974-1
					Duplex[2]	794068-2	794075-2	—	770974-2
18	UL94V-2	Dual Row	794261-1	794262-1	—	—	—	—	—
	UL94V-0	Dual Row	794208-1	794209-1	Tin-Lead[3]	794069-1	794076-1	—	794105-1
					Duplex[2]	794069-2	794076-2	—	794105-2
20	UL94V-2	Dual Row	794263-1	794264-1	—	—	—	—	—
	UL94V-0	Dual Row	794210-1	794211-1	Tin-Lead[3]	794070-1	794077-1	—	794106-1
					Duplex[2]	794070-2	794077-2	—	794106-2
22	UL94V-2	Dual Row	794212-1	794213-1	—	—	—	—	—
	UL94V-0	Dual Row	794212-1	794213-1	Tin-Lead[3]	794071-1	794078-1	—	794107-1
					Duplex[2]	794071-2	794078-2	—	794107-2
24	UL94V-2	Dual Row	794267-1	794268-1	—	—	—	—	—
	UL94V-0	Dual Row	794214-1	794215-1	Tin-Lead[3]	794072-1	794079-1	—	794108-1
					Duplex[2]	794072-2	794079-2	—	794108-2

[1] Mini-Universal MATE-N-LOK 2 plug and cap housings accept pin or socket contacts. Use the appropriate contacts in the plug housing as required by the mating connector. All **Plugs** and **Caps** are **free hanging**.
[2] Duplex Finish — Plated with .000030 [.000762] min. gold in mating area and matte tin-lead on solder tail end over .000050 [.00127] min. nickel underplate on entire contact.
[3] Tin-Lead Finish — Plated with .000150 [.00381] min. tin-lead over .000050 [.00127] min. nickel underplate on entire contact.
[4] All PC board pin headers have 94V-0 flammability rating and can mate to V-0 or V-2 plug housings.

For complete product information, order Catalog 82181

Products for Industrial & Commercial Applications
Dimensions are shown for reference purposes only.
Dimensions are in inches and millimeters unless otherwise specified. Values in brackets are metric equivalents.
Specifications subject to change.
Technical Support Center
1-800-522-6752
www.tycoelectronics.com

Contacts

Product Specification:

Pin diameter—.039 [0.99]

Material:

Brass

Stock Thickness .010 [0.25]

These contacts can be used in either Mini-Universal MATE-N-LOK 2 Plug or Cap housings only.

Related Product Data:

Performance Characteristics — pages 9050, 9051

Housings — pages 9053 and 9054

Technical Documents: pages 9050 and 9080

Product Specifications

108-1693 Mini-Universal MATE-N-LOK 2 Connectors

108-1694 Mini-Universal MATE-N-LOK 2 Headers

Application Specification

114-1111 Mini-Universal MATE-N-LOK 2 Connectors

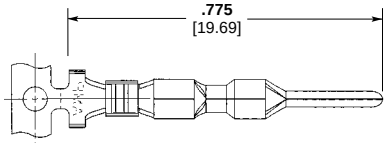

Pin

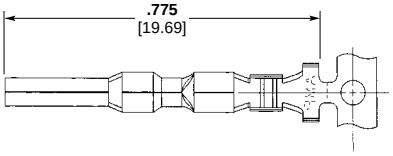

Socket

Not to be used with Mini-Universal MATE-N-LOK Connectors

Wire Size Range AWG [mm²]	Ins. Dia. Range	Finish	Contact Part Numbers				HDM Applicator Part Numbers	Hand Tool Part Numbers
			Pin		Socket			
			Strip Form	Loose Form	Strip Form	Loose Form		
30-26 [.05-.12]	**.035-.050** .889-1.27	Pre-tin	794216-1	794224-1	794217-1	794225-1	567418-1[2] 567418-2[2] 567418-3[2]	—
		Duplex[1]	794216-3	794224-3	794217-3	794225-3		
26-22 [.12-.3]	**.047-.069** 1.19-1.75	Pre-tin	794218-1	794226-1	794219-1	794227-1	567066-3[3] 567066-4[3] 567066-5[3]	90710-2
		Duplex[1]	794218-3	794226-3	794219-3	794227-3		
22-18 [.3-.8]	**.059-.110** 1.50-2.39	Pre-tin	794220-1	794228-1	794221-1	794229-1	567067-1[2] 567067-2[2] 567067-3[2]	90711-2
		Duplex[1]	794220-3	794228-3	794221-3	794229-3		
20-16 [.5-1.2]	**.079-.126** 2.01-3.20	Pre-tin	794222-1	794230-1	794223-1	794231-1	650582-2[2] 650582-3[2]	90707-2
		Duplex[1]	794222-3	794230-3	794223-3	794231-3		

[1] Duplex Finish — Plated with .000030 [.000762] min. gold in mating area and .000100 [.00254] min. tin-lead in crimping area over .000050 [.00127] min. nickel underplate on entire contact.

[2] HDM Applicator part number ending in -1 is used on AMPOMATOR CLS Machine with T or G Terminators, -2 is used on AMP-O-LECTRIC Model K Machine, -3 is used on AMP-O-ELECTRIC Model G Machine.

[3] HDM Applicator part number ending in -3 is used on AMPOMATOR CLS Machine with T or G Terminators, -4 is used on AMP-O-LECTRIC Model K Machine, -5 is used on AMP-O-LECTRIC Model G Machine.

See page 9084 for further information.

Housings, Free Hanging

Product Specification:

Centerline spacing—.163 [4.14]

Related Product Data:

Performance Characteristics — pages 9050, 9051

Contacts — page 9052

Mating Headers — pages 9055 thru 9057

Technical Documents: pages 9050 and 9080

Product Specifications

108-1693 Mini-Universal MATE-N-LOK 2 Connectors

108-1694 Mini-Universal MATE-N-LOK 2 Headers

2 and 3 Circuit, In-Line

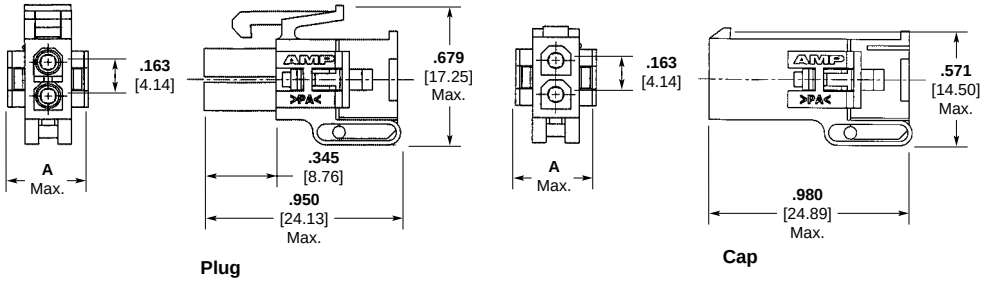

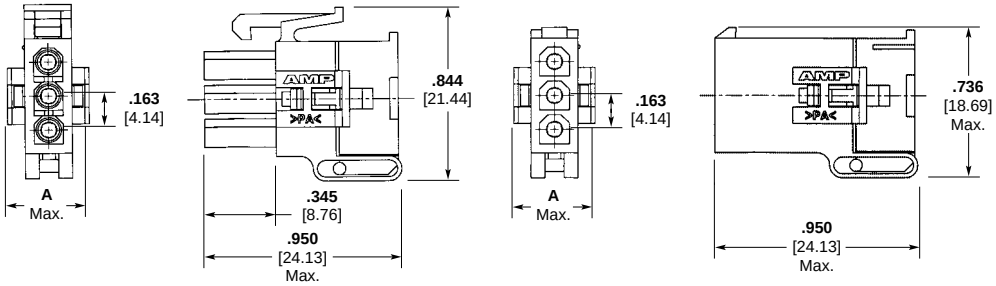

Number of Circuits	A Dim.	Housing Part Numbers			
		UL94V-0 Nylon, White Color		UL94V-2 Nylon, Natural Color	
		Plug	Cap	Plug	Cap
2	.405 10.29	794184-1	794185-1	794237-1	794238-1
3	.405 10.29	794186-1	794187-1	794239-1	794240-1

4 and 6 Circuit, Dual Row

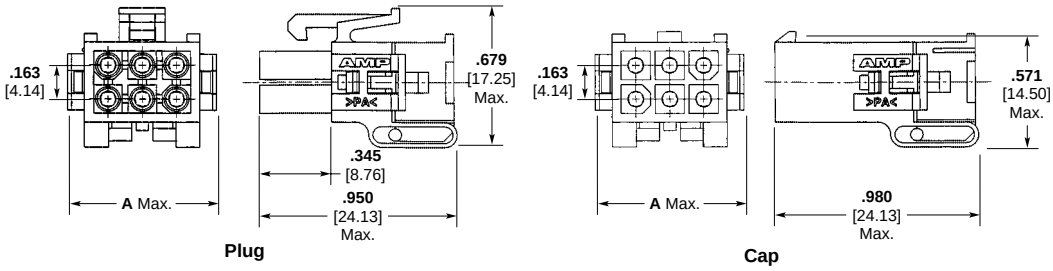

Number of Circuits	A Dim.	Housing Part Numbers			
		UL94V-0 Nylon, White Color		UL94V-2 Nylon, Natural Color	
		Plug	Cap	Plug	Cap
4	.571 14.50	794188-1	794189-1	794241-1	794242-1
6	.736 18.70	794190-1	794191-1	794243-1	794244-1

Keying Plug

Material:

UL94V-0 Nylon, white color

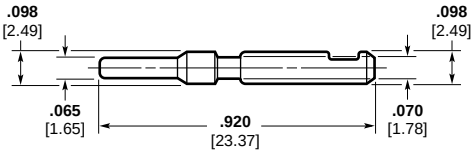

Part Number 794369-1

For complete product information, order Catalog 82181

Products for Industrial & Commercial Applications

Dimensions are shown for reference purposes only.

Dimensions are in inches and millimeters unless otherwise specified. Values in brackets are metric equivalents.

Specifications subject to change.

Technical Support Center
1-800-522-6752
www.tycoelectronics.com

Housings, Free Hanging

Product Specification:

Centerline spacing—.163 [4.14]

Related Product Data:

Performance Characteristics — pages 9050, 9051

Contacts — page 9052

Keying Plug — page 9053

Mating Headers — page 9055 thru 9057

Technical Documents: pages 9050 and 9080

Product Specifications

108-1693 Mini-Universal MATE-N-LOK 2 Connectors

108-1694 Mini-Universal MATE-N-LOK 2 Headers

9, 12 and 15 Circuit, Matrix

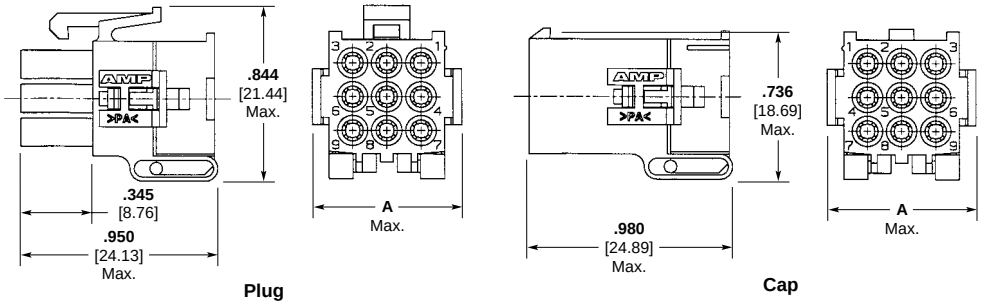

Number of Circuits	A Dim.	Housing Part Numbers			
		UL94V-0 Nylon, White Color		UL94V-2 Nylon, Natural Color	
		Plug	Cap	Plug	Cap
9	**.736** 18.69	794194-1	794195-1	794247-1	794248-1
12	**.901** 22.89	794200-1	794201-1	794253-1	794254-1
15	**1.067** 27.10	794204-1	794205-1	794257-1	794258-1

8 thru 24 Circuit, Dual Row

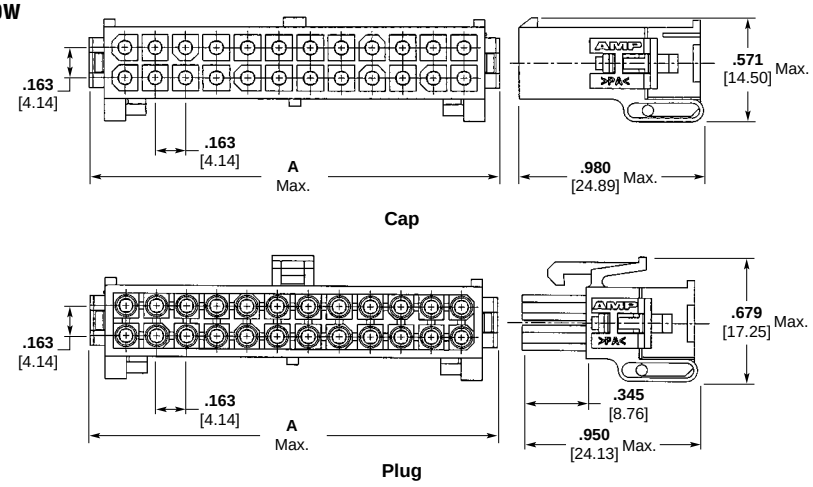

Number of Circuits	A Dim.	Housing Part Numbers			
		UL94V-0 Nylon, White Color		UL94V-2 Nylon, Natural Color	
		Plug	Cap	Plug	Cap
8	**.899** 22.84	794192-1	794193-1	794245-1	794246-1
10	**1.062** 26.98	794196-1	794197-1	794249-1	794250-1
12	**1.225** 31.12	794198-1	794199-1	794251-1	794252-1
14	**1.388** 35.26	794202-1	794203-1	794255-1	794256-1
16	**1.551** 39.40	794206-1	794207-1	794259-1	794260-1
18	**1.714** 43.54	794208-1	794209-1	794261-1	794262-1
20	**1.877** 47.68	794210-1	794211-1	794263-1	794264-1
22	**2.040** 51.82	794212-1	794213-1	794265-1	794266-1
24	**2.203** 55.96	794214-1	794215-1	794267-1	794268-1

For complete product information, order Catalog 82181

Products for Industrial & Commercial Applications
Dimensions are shown for reference purposes only.
Dimensions are in inches and millimeters unless otherwise specified. Values in brackets are metric equivalents.
Specifications subject to change.
Technical Support Center
1-800-522-6752
www.tycoelectronics.com

Vertical PC Board Pin Headers

Product Specification:

Centerline spacing—.163 [4.14]

Material:

Housing—Nylon, white
Flammability Rating—UL94V-0
Contacts—Brass
Solder tail diameter .039 [1.00]

Related Product Data:

Performance Characteristics—page 9050

Technical Documents: pages 9050 and 9080

Product Specification
108-1693 Mini-Universal MATE-N-LOK 2 Connectors
108-1694 Mini-Universal MATE-N-LOK 2 Headers

Mating Connectors:

Mini-Universal MATE-N-LOK 2 Plug Housings— pages 9053 and 9054

Mini-Universal MATE-N-LOK Plug Housings— pages 9061 and 9062

2 and 3 Circuit, In-Line

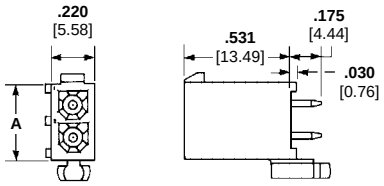

4, 6, 8, 10 and 12 Circuit, Double Row

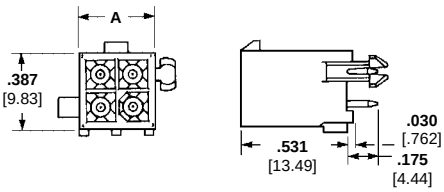

9, 12 and 15 Circuit, Matrix

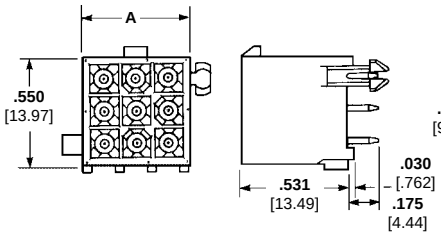

14, 16, 18, 20, 22 and 24 Circuit, Double Row

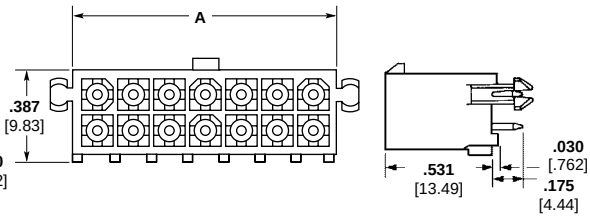

Number of Circuits	Style	A Dim.	Pin Finish	Vertical Pin Header Part Numbers With Drain Holes	Vertical Pin Header Part Numbers Without Drain Holes	Mates with Plug Housing Part Numbers (Using Socket Contacts) Mini-UMNL	Mates with Plug Housing Part Numbers (Using Socket Contacts) Mini-UMNL 2
2	In-Line	**.387** 9.83	Tin-Lead[1]	770166-1	770872-1	172165-1	794184-1
			Duplex[2]	770166-2	770872-2		
3	In-Line	**.550** 13.97	Tin-Lead[1]	770170-1	770873-1	172166-1	794186-1
			Duplex[2]	770170-2	770873-2		
4	Dual Row	**.387** 9.83	Tin-Lead[1]	770174-1	770874-1	172167-1	794188-1
			Duplex[2]	770174-2	770874-2		
6	Dual Row	**.550** 13.97	Tin-Lead[1]	770178-1	770875-1	172168-1	794190-1
			Duplex[2]	770178-2	770875-2		
8	Dual Row	**.713** 18.11	Tin-Lead[1]	794065-1	794073-1	770579-1	794192-1
			Duplex[2]	794065-2	794073-2		
9	Matrix	**.551** 14.00	Tin-Lead[1]	770182-1	770876-1	172169-1	794194-1
			Duplex[2]	770182-2	770876-2		
10	Dual Row	**.877** 22.28	Tin-Lead[1]	770743-1	770858-1	770580-1	794196-1
			Duplex[2]	770743-2	770858-2		
12	Dual Row	**1.039** 26.39	Tin-Lead[1]	794066-1	770621-1	770581-1	794198-1
			Duplex[2]	794066-2	770621-2		
	Matrix	**.713** 18.11	Tin-Lead[1]	770186-1	794040-1	172170-1	794200-1
			Duplex[2]	770186-2	794040-2		
14	Dual Row	**1.202** 30.53	Tin-Lead[1]	794067-1	794074-1	770582-1	794202-1
			Duplex[2]	794067-2	794074-2		
15	Matrix	**.877** 22.28	Tin-Lead[1]	770190-1	770859-1	172171-1	794204-1
			Duplex[2]	770190-2	770859-2		
16	Dual Row	**1.365** 34.67	Tin-Lead[1]	794068-1	794075-1	770583-1	794206-1
			Duplex[2]	794068-2	794075-2		
18	Dual Row	**1.528** 38.81	Tin-Lead[1]	794069-1	794076-1	770584-1	794208-1
			Duplex[2]	794069-2	794076-2		
20	Dual Row	**1.691** 42.95	Tin-Lead[1]	794070-1	794077-1	770585-1	794210-1
			Duplex[2]	794070-2	794077-2		
22	Dual Row	**1.854** 47.09	Tin-Lead[1]	794071-1	794078-1	770586-1	794212-1
			Duplex[2]	794071-2	794078-2		
24	Dual Row	**2.017** 51.23	Tin-Lead[1]	794072-1	794079-1	770587-1	794214-1
			Duplex[2]	794072-2	794079-2		

[1] Tin-Lead Finish—Plated with .000150 [.00381] min. tin-lead over .000050 [.00127] min. nickel underplate on entire contact.
[2] Duplex Finish—Plated with .000030 [.000762] min. gold in mating area and matte tin-lead on solder tail end over .000050 [.00127] min. nickel underplate on entire contact.

For complete product information, order Catalog 82181

Vertical PC Board Blindmate Pin Headers

Product Specification:

Centerline spacing—.163 [4.14]

Material:

Housing — Nylon, white
Flammability Rating— UL94V-0
Contacts — Brass
Solder tail diameter .039 [1.00]

Related Product Data:

Performance Characteristics — page 9050

Technical Documents: pages 9050 and 9080

Product Specification
108-1693 Mini-Universal MATE-N-LOK 2 Connectors
108-1694 Mini-Universal MATE-N-LOK 2 Headers

Mating Connectors:

Mini-Universal MATE-N-LOK 2 Plug Housings— pages 9053, 9054
Mini-Universal MATE-N-LOK Plug Housings— pages 9061 and 9062

4, 6, 8 and 10 Circuit, Double Row

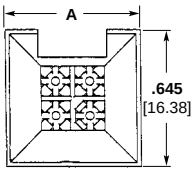

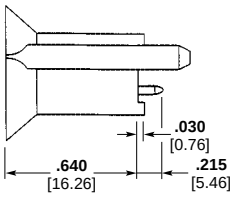

9, 12 and 15 Circuit, Matrix

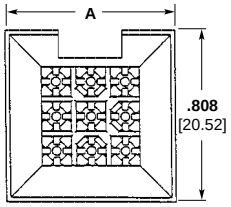

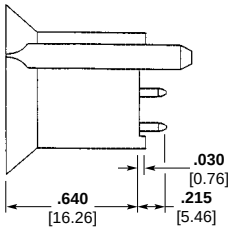

Number of Circuits	Style	A Dim.	Pin Finish	Pin Header Part Numbers with Drain Holes	Mates with Plug Housing Part Numbers (Using Socket Contacts)	
					Mini-UMNL	Mini-UMNL 2
4	Dual Row	**.645** 16.38	Tin-Lead[1]	794325-1	172167-1	794188-1
			Duplex[2]	794325-2		
6	Dual Row	**.808** 20.52	Tin-Lead[1]	794326-1	172168-1	794190-1
			Duplex[2]	794326-2		
8	Dual Row	**.971** 24.66	Tin-Lead[1]	794327-1	770579-1	794192-1
			Duplex[2]	794327-2		
9	Matrix	**.808** 20.52	Tin-Lead[1]	794432-1	172169-1	794194-1
			Duplex[2]	794432-2		
10	Dual Row	**1.134** 28.80	Tin-Lead[1]	794328-1	770580-1	794196-1
			Duplex[2]	794328-2		
12	Matrix	**.971** 24.66	Tin-Lead[1]	794329-1	172170-1	794200-1
			Duplex[2]	794329-2		
15	Matrix	**1.134** 28.80	Tin-Lead[1]	794330-1	172171-1	794204-1
			Duplex[2]	794330-2		

[1] Tin-Lead Finish — Plated with .000150 [.00381] min. tin-lead over .000050 [.00127] min. nickel underplate on entire contact.
[2] Duplex Finish — Plated with .000030 [.000762] min. gold in mating area and matte tin-lead on solder tail end over .000050 [.00127] min. nickel underplate on entire contact.

For complete product information, order Catalog 82181

Products for Industrial & Commercial Applications

Dimensions are shown for reference purposes only.

Dimensions are in inches and millimeters unless otherwise specified. Values in brackets are metric equivalents.

Specifications subject to change.

Technical Support Center
1-800-522-6752
www.tycoelectronics.com

Right-Angle PC Board Pin Headers

Product Specification:

Centerline spacing—.163 [4.14]

Material:

Housing — Nylon, white color
Flammability Rating — UL94V-0
Contacts — Brass
Solder tail diameter .039 [1.00]

Related Product Data:

Performance Characteristics — page 9050

Technical Document: pages 9050 and 9080

Product Specification
108-1694 Mini-Universal MATE-N-LOK Headers

Mating Connectors:

Mini-Universal MATE-N-LOK 2 Plug Housings— pages 9053 and 9054

Mini-Universal MATE-N-LOK Plug Housings— pages 9061 and 9062

With Board Lock Feature

2 and 3 Circuit, In-Line

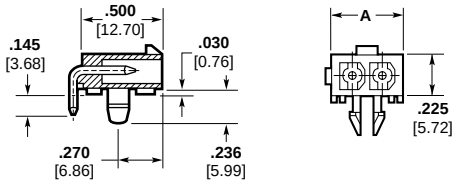

4, 6, 8, 10 and 12 Circuit, Dual Row

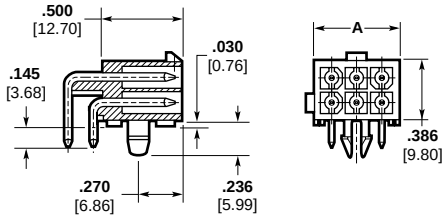

14, 16, 18, 20, 22 and 24 Circuit, Dual Row

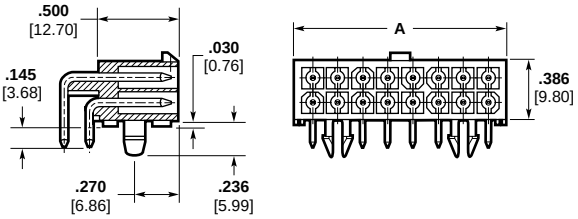

Number of Circuits	Style	A Dim.	Pin Finish	Pin Header Part Number with Board Lock	Mates with Plug Housing Part Numbers (Using Socket Contacts)	
					Mini-UMNL	Mini-UMNL 2
2	In-line	**.388** 9.86	Tin-Lead[1]	770966-1	172165-1	794184-1
			Duplex[2]	770966-2		
3	In-line	**.551** 14.00	Tin-Lead[1]	770967-1	172166-1	794186-1
			Duplex[2]	770967-2		
4	Dual Row	**.388** 9.86	Tin-Lead[1]	770968-1	172167-1	794188-1
			Duplex[2]	770968-2		
6	Dual Row	**.551** 14.00	Tin-Lead[1]	770969-1	172168-1	794190-1
			Duplex[2]	770969-2		
8	Dual Row	**.714** 18.14	Tin-Lead[1]	770970-1	770579-1	794192-1
			Duplex[2]	770970-2		
10	Dual Row	**.877** 22.28	Tin-Lead[1]	770971-1	770580-1	794196-1
			Duplex[2]	770971-2		
12	Dual Row	**1.040** 26.42	Tin-Lead[1]	770972-1	770581-1	794198-1
			Duplex[2]	770972-2		
14	Dual Row	**1.203** 30.56	Tin-Lead[1]	770973-1	770582-1	794202-1
			Duplex[2]	770973-2		
16	Dual Row	**1.366** 34.70	Tin-Lead[1]	770974-1	770583-1	794206-1
			Duplex[2]	770974-2		
18	Dual Row	**1.529** 38.84	Tin-Lead[1]	794105-1	770584-1	794208-1
			Duplex[2]	794105-2		
20	Dual Row	**1.692** 42.98	Tin-Lead[1]	794106-1	770585-1	794210-1
			Duplex[2]	794106-2		
22	Dual Row	**1.855** 47.12	Tin-Lead[1]	794107-1	770586-1	794212-1
			Duplex[2]	794107-2		
24	Dual Row	**2.018** 51.26	Tin-Lead[1]	794108-1	770587-1	794214-1
			Duplex[2]	794108-2		

[1] Tin-Lead Finish — Plated with .000150 [.00381] min. tin-lead over .000050 [.00127] min. nickel underplate on entire contact.
[2] Duplex Finish — Plated with .000030 [.000762] min. gold in mating area and matte tin-lead on solder tail end over .000050 [.00127] min. nickel underplate on entire contact.

For complete product information, order Catalog 82181

Products for Industrial & Commercial Applications
Dimensions are shown for reference purposes only.
Dimensions are in inches and millimeters unless otherwise specified. Values in brackets are metric equivalents.
Specifications subject to change.
Technical Support Center
1-800-522-6752
www.tycoelectronics.com

Product Facts

- **Compact, durable housings**
- **Pins and sockets can be accommodated in the same housings**
- **Contacts fully protected in the housings. Both pins and sockets can be used on the power supply wiring**
- **Fully polarized to provide proper plug-to-cap mating incorporating a positive locking mechanism to help prevent accidental disengagement of mated connectors. Also facilitates panel mounting**
- **Free hanging or panel mount**
- **Housings available in 1, 2, 3, 4, 6, 9, 12 and 15 circuit configuration for wire-to-wire connection**
- **Connectors can be mounted to .031-.079 [0.79-2.00] thick panels**
- **Printed circuit board pin headers are available in 2 thru 24 circuit vertical and right-angle configurations**
- **Hermaphroditic housings available in 2, 3 and 4 circuits for free hanging applications**
- **Low insertion/extraction forces**
- **Contacts accept wire size range 30-16 AWG [.05-1.2 mm²]**
- **Test probe contacts available**
- **.163 [4.14] centerline spacing**
- **Not for interrupting current**
- **Recognized under the Component Program of Underwriters Laboratories Inc., File No. E28476**
- **Certified by Canadian Standards Association, File No. LR 38721**
- **Passed test by VDE under their Registration Number 3476/ Continuous Surveillance**

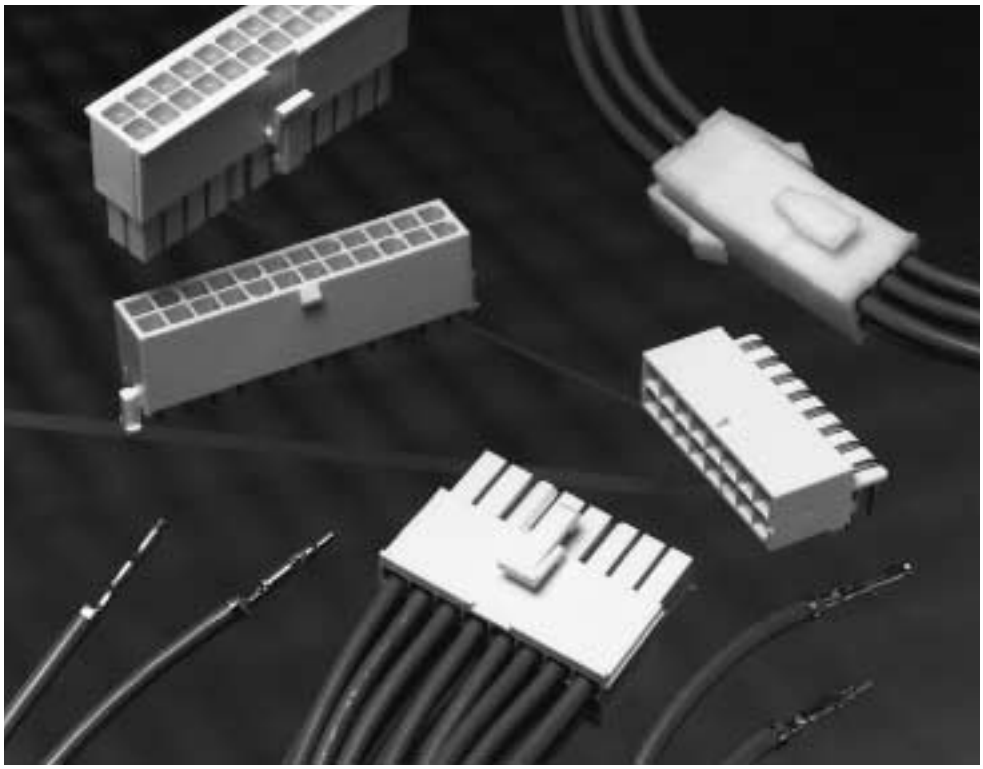

Performance Characteristics:

The Mini-Universal MATE-N-LOK Connector performance characteristics found below are based on free hanging and panel mount connectors, loaded with contacts crimped on stranded wire.

Low Level Termination Resistance—20 milliohms max. total resistance between wire crimps of a mated pin and socket

Dielectric Withstanding Voltage—1.5 KVAC between adjacent circuits

Insulation Resistance—1000 megohms minimum between adjacent circuits

Voltage Rating—600V AC or DC

Contact Retention—8 lb. min. per contact

Durability—20 cycles, mating and unmating

Mini-Universal MATE-N-LOK connectors also will withstand the following tests:

Housing Panel Retention—26 lb. min.

Housing Lock Strength—6 lb. min.

Thermal Shock— −20°C to +105°C

Temperature-Humidity Cycling—25°C to 65°C at 95% RH

Corrosion—48 hr. at 5% salt concentration

Vibration—10-55-10 cycles per minute at .06 inch total excursion

Physical Shock—18 drops, 50 G half-sine at 11 milliseconds

Technical Documents:

Product Specifications

108-1542 Mini-Universal MATE-N-LOK Connectors
108-1543 Mini-Universal MATE-N-LOK Headers
108-5151 Mini-Universal MATE-N-LOK Connectors (UL94V-2)
108-5138 Mini-Universal MATE-N-LOK Connectors (UL94V-0)

Application Specification

114-16017 Mini-Universal MATE-N-LOK Connectors

Instruction Sheet

408-3234 Mini-Universal MATE-N-LOK Connectors

For complete product information, order Catalog 82181

Products for Industrial & Commercial Applications

Dimensions are shown for reference purposes only.

Dimensions are in inches and millimeters unless otherwise specified. Values in brackets are metric equivalents.

Specifications subject to change.

Technical Support Center
1-800-522-6752
www.tycoelectronics.com

Mini-Universal MATE-N-LOK Connector Mating Combinations

Connector Part Numbers					Mating Connector Part Numbers				
						PC Board Pin Headers			
						Vertical			Right-Angle
Number of Circuits	Flammability Rating	Style	Plug[1] Housing Part Numbers	Cap[1] Housing Part Numbers	Plating	With Drain Holes	Without Drain Holes	Blindmate	With Board Lock
1	UL94V-2	In-Line	172335-1	172327-1[4]	—	—	—	—	—
	UL94V-0	In-Line	172164-1	172156-1[4]	Tin - Lead[6]	—	—	—	794347-1
					Duplex[5]	—	—	—	794347-2
2	UL94V-2	In-Line	172336-1	172328-1[2]	—	—	—	—	—
				172343-1[4]	—	—	—	—	—
			172807-1[3]	172807-1[3]	—	—	—	—	—
	UL94V-0	In-Line	173956-1[3]	173956-1[3]	—	—	—	—	—
			172165-1	172157-1[2]	Tin - Lead[6]	770166-1	770872-1	—	770966-1
				172233-1[4]	Duplex[5]	770166-2	770872-2	—	770966-2
3	UL94V-2	In-Line	172808-1[3]	172808-1[3]	—	—	—	—	—
			172337-1	172329-1[2]	Tin - Lead	—	—	—	—
				172344-1[4]	Duplex[5]	—	—	—	794044-2
	UL94V-0	In-Line	173957-1[3]	173957-1[3]	—	—	—	—	—
			172166-1	172158-1[2]	Tin - Lead	770170-1	770873-1	—	770967-1
				172234-1[4]	Duplex[5]	770170-2	770873-2	—	770967-2
4	UL94V-2	Dual Row	172809-1[3]	172809-1[3]	—	—	—	—	—
			172338-1	172330-1	—	—	—	—	—
	UL94V-0	Dual Row	172958-1[3]	172958-1[3]	—	—	—	—	—
			172167-1	172159-1	Tin - Lead	770174-1	770874-1	794325-1	770968-1
					Duplex[5]	770174-2	770874-2	794325-2	770968-2
6	UL94V-2	Dual Row	172339-1	172331-1	—	—	—	—	—
	UL94V-0	Dual Row	172168-1	172160-1	Tin - Lead	770178-1	770875-1	794326-1	770969-1
					Duplex[5]	770178-2	770875-2	794326-2	770969-2
8	UL94V-0	Dual Row	770579-1	—	Tin - Lead	794065-1	794073-1	794327-1	770970-1
					Duplex[5]	794065-2	794073-2	794327-2	770970-2
9	UL94V-2	Matrix	172340-1	172332-1	—	—	—	—	—
	UL94V-0	Matrix	172169-1	172161-1	Tin - Lead	770182-1	770876-1	794130-1	—
					Duplex[5]	770182-2	770876-2	794130-2	—
10	UL94V-0	Dual Row	770580-1	—	Tin - Lead	770743-1	770858-1	794328-1	770971-1
					Duplex[5]	770743-2	770858-2	794328-2	770971-2
12	UL94V-2	Matrix	172341-1	172333-1	—	—	—	—	—
	UL94V-0	Matrix	172170-1	172162-1	Tin - Lead	770186-1	794040-1	794329-1	—
					Duplex[5]	770186-2	794040-2	794329-2	—
		Dual Row	770581-1	—	Tin - Lead	794066-1	770621-1	—	770972-1
					Duplex[5]	794066-2	770621-2	—	770972-2
14	UL94V-0	Dual Row	770582-1	—	Tin - Lead	794067-1	794074-1	—	770973-1
					Duplex[5]	794067-2	794074-2	—	770973-2
15	UL94V-2	Matrix	172342-1	172334-1	—	—	—	—	—
	UL94V-0	Matrix	172171-1	172163-1	Tin - Lead	770190-1	770859-1	794330-1	—
					Duplex[5]	770190-2	770859-2	794330-1	—
16	UL94V-0	Dual Row	770583-1	—	Tin - Lead	794068-1	794075-1	—	770974-1
					Duplex[5]	794068-2	794075-2	—	770974-2
18	UL94V-0	Dual Row	770584-1	—	Tin - Lead	794069-1	794076-1	—	794105-1
					Duplex[5]	794069-2	794076-2	—	794105-2
20	UL94V-0	Dual Row	770585-1	—	Tin - Lead	794070-1	794077-1	—	794106-1
					Duplex[5]	794070-2	794077-2	—	794106-2
22	UL94V-0	Dual Row	770586-1	—	Tin - Lead	794071-1	794078-1	—	794107-1
					Duplex[5]	794071-2	794078-2	—	794107-2
24	UL94V-0	Dual Row	770587-1	—	Tin - Lead	794072-1	794079-1	—	794108-1
					Duplex[5]	794072-2	794079-2	—	794108-2

[1] Mini-Universal MATE-N-LOK plug and cap housings accept pin or socket contacts. Use the appropriate contacts in the plug housing as required by the mating connector. All **Plugs** are **free hanging** and **Caps** are **free hanging** or **panel mount,** unless otherwise noted.
[2] Panel mount only.
[3] Hermaphroditic: Mates to itself.
[4] Free hanging only.
[5] Duplex Finish — Plated with .000030 [.000762] min. gold in mating area and matte tin-lead on solder tail end over .000050 [.00127] min. nickel underplate on entire contact.
[6] Tin-Lead Finish — Plated with .000150 [.00381] min. tin-lead over .000050 [.00127] min. nickel underplate on entire contact.

For complete product information, order Catalog 82181

Contacts

Product Specifications:

Pin diameter—.039 [0.99]

Stock Thickness—.008 [0.20]

These contacts are to be used in Mini-Universal MATE-N-LOK Plug or Cap housings only.

Material:

Brass

Related Product Data:

Performance Characteristics — page 9058

Housings — pages 9061 and 9062

Application Tooling — pages 9081, 9082 and 9084

Technical Documents: pages 9058 and 9080

Product Specifications

108-1542 Mini-Universal MATE-N-LOK Connectors

108-1543 Mini-Universal MATE-N-LOK Headers

Application Specification

114-16017 Mini-Universal MATE-N-LOK Connectors

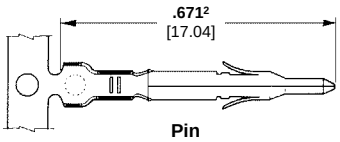

Pin

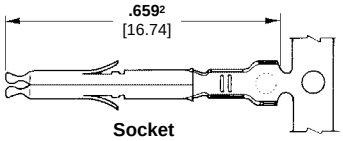

Socket

Wire Size Range AWG [mm²]	Ins. Dia. Range	Finish	Contact Part Numbers				HDM Applicator Part Numbers	Hand Tool Part Numbers
			Pin		Socket			
			Strip Form	Loose Form	Strip Form	Loose Form		
30-26 [.05-.12]	**.035-.050** .889-1.27	Pre-tin	770835-1	794059-1	770834-1	794058-1	567418-1[3] 567418-2[3] 567418-3[3]	—
		Duplex[1]	770835-3	794059-3	770834-3	794058-3		
26-22 [.12-.3]	**.047-.069** 1.19-1.75	Pre-tin	770901-1	770985-1	770902-1	770986-1	567066-3[4] 567066-4[4] 567066-5[4]	90710-2
		Duplex[1]	770901-3	770985-3	770902-3	770986-3		
22-18 [.3-.8] or 22 x (2) [.3]	**.059-.110** 1.50-2.39 or **.133** Max. 3.38	Pre-tin	770903-1	770987-1	770904-1	770988-1	567067-1[3] 567067-2[3] 567067-3[3]	90711-2
		Duplex[1]	770903-3	770987-3	770904-3	770988-3		
20-16 [.5-1.2] or 20 x (2) [.5]	**.079-.126** 2.01-3.20 or **.094 x (2)** 2.39	Pre-tin	171636-1[2]	171638-1[2]	171637-1[2]	171639-1[2]	567251-2[3] 567251-3[3]	90707-1
		Duplex[1]	—	—	171637-3[2]	—		

[1] Duplex Finish — Plated with .000030 [.000762] min. gold in mating area and .000100 [.00254] min. tin-lead in crimping area over .000050 [.00127] min. nickel underplate on entire contact.

[2] .671 [17.04] and .659 [16.74] dimensions are .689 [17.50] for indicated part numbers.

[3] HDM Applicator part number ending in -1 is used on AMPOMATOR CLS Machine with T or G Terminators, -2 is used on AMP-O-LECTRIC Model K Machine, -3 is used on AMP-O-LECTRIC Model G Machine. See page 9084 for further information.

[4] HDM Applicator part number ending in -3 is used on AMPOMATOR CLS Machine with T or G Terminators, -4 is used on AMP-O-LECTRIC Model K Machine, -5 is used on AMP-O-LECTRIC Model G Machine. See page 9084 for further information.



Contact Extraction Tool
Part Number 189727-1
IS 408-4118



Contact Insertion Tool
(For inserting contacts applied to small diameter wire)
Part Number 455830-1
IS 408-7984

Keying Plug

Material:

UL94V-0 Nylon, white color

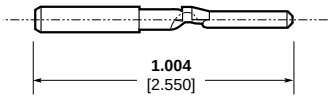

Part Number
174670-1

Test Probe Contact

Material and Finish:

Phosphor bronze, nickel plated

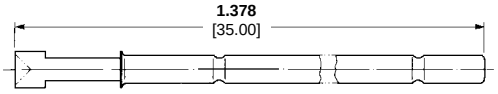

Part Number
172971-1

Notes:

1. The test probe is inserted into the housing in the same direction as indicated by the **arrow** shown to the right.
2. The test probe can be used in the Cap or Plug Housing.
3. Test probes are supplied unassembled.

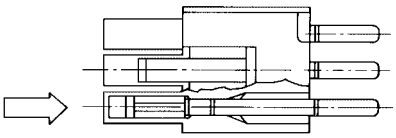

For complete product information, order Catalog 82181

Housings, Free Hanging or Panel Mount

Product Specification:

Centerline spacing—.163 [4.14]

Related Product Data:

Performance Characteristics — page 9058
Contacts — page 9060
Keying Plug — page 9060
Test Probe Contact — page 9060
Mating Headers — pages 9063 thru 9065

Technical Documents: pages 9058 and 9080

Product Specifications

108-1542 Mini-Universal MATE-N-LOK Connectors
108-1543 Mini-Universal MATE-N-LOK Headers
108-5151 Mini-Universal MATE-N-LOK Connectors (UL94V-2)
108-5138 Mini-Universal MATE-N-LOK Connectors (UL94V-0)

1 Circuit, Free Hanging

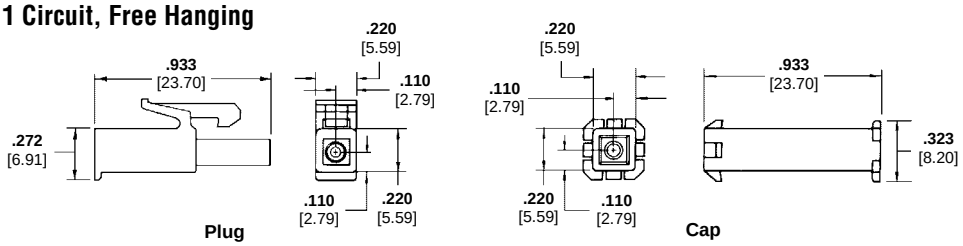

2 and 3 Circuit, In-Line

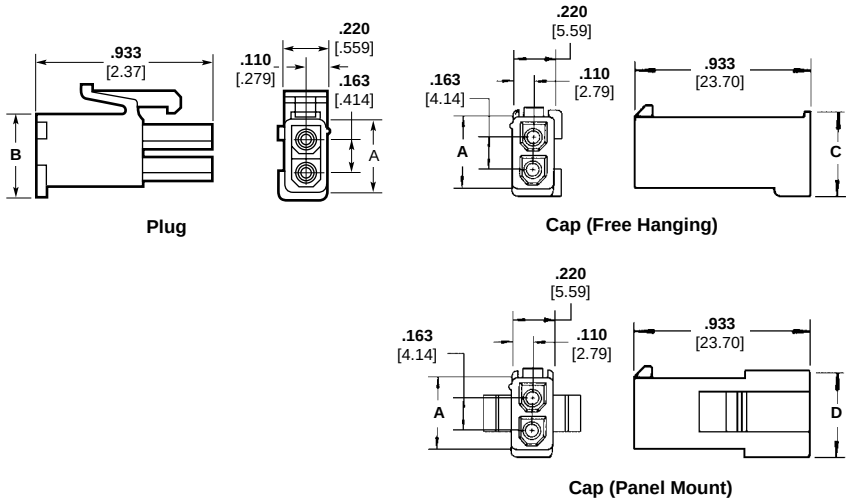

Number of Circuits	Dimensions				Housing Part Numbers[1]					
					UL94V-0 Nylon, White Color			UL94V-2 Nylon, Natural Color		
	A	B	C	D	Plug	Cap		Plug	Cap	
						Panel Mount	Free Hanging		Panel Mount	Free Hanging
1	—	—	—	—	172164-1	—	172156-1	172335-1	—	172327-1
2	.386 9.80	.425 10.79	.488 12.39	.464 11.78	172165-1	172157-1	172233-1	172336-1	172328-1	172343-1
3	.551 14.00	.591 15.01	.654 16.61	.630 16.00	172166-1	172158-1	172234-1	172337-1	172329-1	172344-1

4 and 6 Circuit, Dual Row

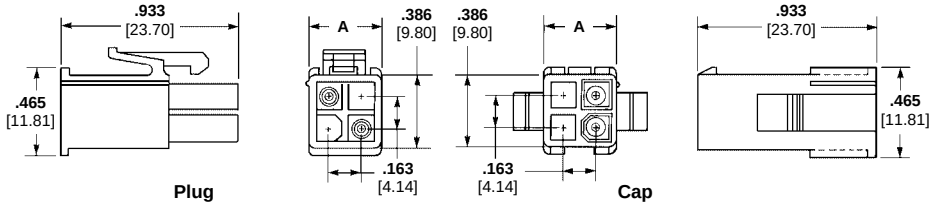

Number of Circuits	A Dim.	Housing Part Numbers[1]			
		UL94V-0 Nylon, White Color		UL94V-2 Nylon, Natural Color	
		Plug	Cap	Plug	Cap
4	.386 9.80	172167-1	172159-1	172338-1	172330-1
6	.551 14.00	172168-1	172160-1	172339-1	172331-1

[1] Housing part numbers shown in the tables are all natural color. Other colors, red, green, blue, black, are also available. To order connectors in these colors use the appropriate dash numbers as follows: Red 1-XXXXXX-2, Green 1-XXXXXX-5, Blue 1-XXXXXX-6, Black 1-XXXXXX-9

For complete product information, order Catalog 82181

Products for Industrial & Commercial Applications
Dimensions are shown for reference purposes only.
Dimensions are in inches and millimeters unless otherwise specified. Values in brackets are metric equivalents.
Specifications subject to change.
Technical Support Center
1-800-522-6752
www.tycoelectronics.com

Housings

Product Specification:

Centerline spacing—.163 [4.14]

Related Product Data:

Performance Characteristics — page 9058
Contacts — page 9060
Keying Plug — page 9060
Test Probe Contact — page 9060
Mating Headers — pages 9063 thru 9065

Technical Documents: pages 9058 and 9080

Product Specifications

108-1542 Mini-Universal MATE-N-LOK Connectors
108-1543 Mini-Universal MATE-N-LOK Headers
108-5151 Mini-Universal MATE-N-LOK Connectors (UL94V-2)
108-5138 Mini-Universal MATE-N-LOK Connectors (UL94V-0)

9, 12 and 15 Circuit, Free Hanging or Panel Mount, Matrix

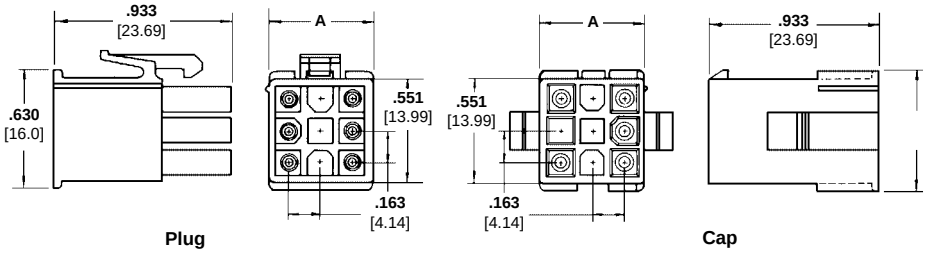

Number of Circuits	A Dim.	Housing Part Numbers[1]			
		UL94V-0 Nylon, White Color		UL94V-2 Nylon, Natural Color	
		Plug	Cap	Plug	Cap
9	**.551** 13.99	172169-1	172161-1	172340-1	172332-1
12	**.716** 18.19	172170-1	172162-1	172341-1	172333-1
15	**.882** 22.40	172171-1	172163-1	172342-1	172334-1

[1] Housing part numbers shown in table are all natural color. Other colors, red, green, blue, black, are also available. To order connectors in these colors use the appropriate dash numbers as follows: Red 1-XXXXXX-2, Green 1-XXXXXX-5, Blue 1-XXXXXX-6, Black 1-XXXXXX-9

8 thru 24 Circuit, Free Hanging, Dual Row

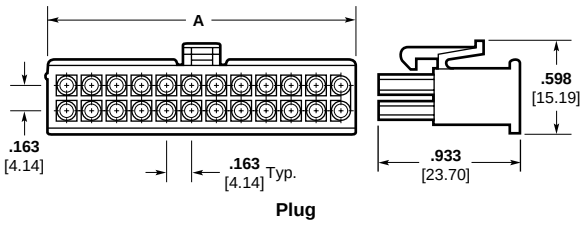

Number of Circuits	A Dim.	Plug Part Numbers
		UL94V-0 Nylon, White Color
8	**.714** 18.14	770579-1
10	**.877** 22.28	770580-1
12	**1.040** 26.42	770581-1
14	**1.203** 30.56	770582-1
16	**1.366** 34.70	770583-1
18	**1.529** 38.84	770584-1
20	**1.692** 42.98	770585-1
22	**1.855** 47.12	770586-1
24	**2.018** 51.26	770587-1

For complete product information, order Catalog 82181

Products for Industrial & Commercial Applications
Dimensions are shown for reference purposes only.
Dimensions are in inches and millimeters unless otherwise specified. Values in brackets are metric equivalents.
Specifications subject to change.
Technical Support Center
1-800-522-6752
www.tycoelectronics.com

Vertical PC Board Pin Headers

Product Specification:

Centerline spacing—.163 [4.14]

Material:

Housing—Nylon, white
Flammability Rating—UL94V-0
Contacts—Brass
Solder tail diameter .039 [1.00]

Related Product Data:

Performance Characteristics—page 9058

Technical Documents: pages 9058 and 9080

Product Specification
108-1542 Mini-Universal MATE-N-LOK Connectors
108-1543 Mini-Universal MATE-N-LOK Headers
108-5151 Mini-Universal MATE-N-LOK Connectors (UL94V-2)
108-5138 Mini-Universal MATE-N-LOK Connectors (UL94V-0)

Mating Connectors:

Mini-Universal MATE-N-LOK Plug Housings—pages 9061, 9062
Mini-Universal MATE-N-LOK 2 Plug Housings—pages 9053, 9054

2 and 3 Circuit, In-Line

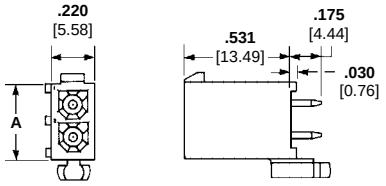

4, 6, 8, 10 and 12 Circuit, Double Row

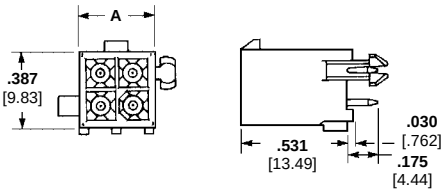

9, 12 and 15 Circuit, Matrix

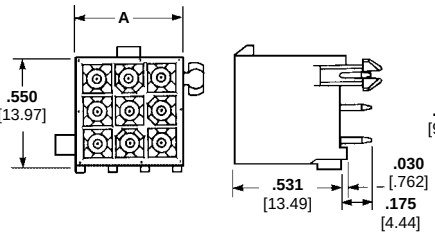

14, 16, 18, 20, 22 and 24 Circuit, Double Row

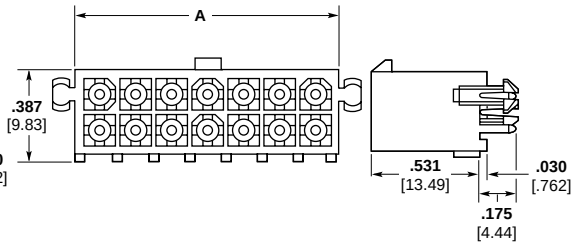

Number of Circuits	Style	A Dim.	Pin Finish	Vertical Pin Header Part Numbers With Drain Holes	Vertical Pin Header Part Numbers Without Drain Holes	Mates with Plug Housing Part Numbers (Using Socket Contact) Mini-UMNL	Mates with Plug Housing Part Numbers (Using Socket Contact) Mini-UMNL 2
2	In-Line	**.387** 9.83	Tin-Lead[1]	770166-1	770872-1	172165-1	794184-1
			Duplex[2]	770166-2	770872-2		
3	In-Line	**.550** 13.97	Tin-Lead[1]	770170-1	770873-1	172166-1	794186-1
			Duplex[2]	770170-2	770873-2		
4	Dual Row	**.387** 9.83	Tin-Lead[1]	770174-1	770874-1	172167-1	794188-1
			Duplex[2]	770174-2	770874-2		
6	Dual Row	**.550** 13.97	Tin-Lead[1]	770178-1	770875-1	172168-1	794190-1
			Duplex[2]	770178-2	770875-2		
8	Dual Row	**.713** 18.11	Tin-Lead[1]	794065-1	794073-1	770579-1	794192-1
			Duplex[2]	794065-2	794073-2		
9	Matrix	**.551** 14.00	Tin-Lead[1]	770182-1	770876-1	172169-1	794194-1
			Duplex[2]	770182-2	770876-2		
10	Dual Row	**.877** 22.28	Tin-Lead[1]	770743-1	770858-1	770580-1	794196-1
			Duplex[2]	770743-2	770858-2		
12	Dual Row	**1.039** 26.39	Tin-Lead[1]	794066-1	770621-1	770581-1	794198-1
			Duplex[2]	794066-2	770621-2		
	Matrix	**.713** 18.11	Tin-Lead[1]	770186-1	794040-1	172170-1	794200-1
			Duplex[2]	770186-2	794040-2		
14	Dual Row	**1.202** 30.53	Tin-Lead[1]	794067-1	794074-1	770582-1	794202-1
			Duplex[2]	794067-2	794074-2		
15	Matrix	**.877** 22.28	Tin-Lead[1]	770190-1	770859-1	172171-1	794204-1
			Duplex[2]	770190-2	770859-2		
16	Dual Row	**1.365** 34.67	Tin-Lead[1]	794068-1	794075-1	770583-1	794206-1
			Duplex[2]	794068-2	794075-2		
18	Dual Row	**1.528** 38.81	Tin-Lead[1]	794069-1	794076-1	770584-1	794208-1
			Duplex[2]	794069-2	794076-2		
20	Dual Row	**1.691** 42.95	Tin-Lead[1]	794070-1	794077-1	770585-1	794210-1
			Duplex[2]	794070-2	794077-2		
22	Dual Row	**1.854** 47.09	Tin-Lead[1]	794071-1	794078-1	770586-1	794212-1
			Duplex[2]	794071-2	794078-2		
24	Dual Row	**2.017** 51.23	Tin-Lead[1]	794072-1	794079-1	770587-1	794214-1
			Duplex[2]	794072-2	794079-2		

[1] Tin-Lead Finish—Plated with .000150 [.00381] min. tin-lead over .000050 [.00127] min. nickel underplate on entire contact.
[2] Duplex Finish—Plated with .000030 [.000762] min. gold in mating area and matte tin-lead on solder tail end over .000050 [.00127] min. nickel underplate on entire contact.

For complete product information, order Catalog 82181

Products for Industrial & Commercial Applications
Dimensions are shown for reference purposes only.
Dimensions are in inches and millimeters unless otherwise specified. Values in brackets are metric equivalents.
Specifications subject to change.
Technical Support Center
1-800-522-6752
www.tycoelectronics.com

Vertical PC Board Blindmate Pin Headers

Product Specification:

Centerline spacing—.163 [4.14]

Material:

Housing — Nylon, white
Flammability Rating— UL94V-0
Contacts — Brass
Solder tail diameter .039 [1.00]

Related Product Data:

Performance Characteristics — page 9058

Technical Documents: pages 9058 and 9080

Product Specification
108-1693 Mini-Universal MATE-N-LOK 2 Connectors
108-1694 Mini-Universal MATE-N-LOK 2 Headers

Mating Connectors:

Mini-Universal MATE-N-LOK Plug Housings— pages 9061 and 9062

Mini-Universal MATE-N-LOK 2 Plug Housings— pages 9053 and 9054

4, 6, 8 and 10 Circuit, Double Row

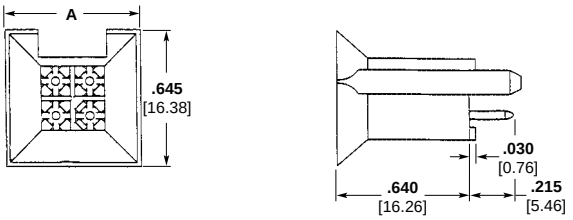

9, 12 and 15 Circuit, Matrix

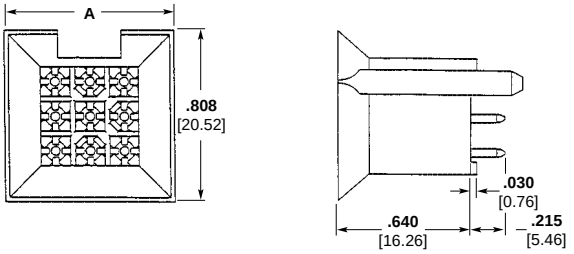

Number of Circuits	Style	A Dim.	Pin Finish	Pin Header Part Numbers with Drain Holes	Mates with Plug Housing Part Numbers (Using Socket Contacts)	
					Mini-UMNL	Mini-UMNL 2
4	Dual Row	**.645** 16.38	Tin-Lead[1]	794325-1	172167-1	794188-1
			Duplex[2]	794325-2		
6	Dual Row	**.808** 20.52	Tin-Lead[1]	794326-1	172168-1	794190-1
			Duplex[2]	794326-2		
8	Dual Row	**.971** 24.66	Tin-Lead[1]	794327-1	770579-1	794192-1
			Duplex[2]	794327-2		
9	Matrix	**.808** 20.52	Tin-Lead[1]	794432-1	172169-1	794194-1
			Duplex[2]	794432-2		
10	Dual Row	**1.134** 28.80	Tin-Lead[1]	794328-1	770580-1	794196-1
			Duplex[2]	794328-2		
12	Matrix	**.971** 24.66	Tin-Lead[1]	794329-1	172170-1	794200-1
			Duplex[2]	794329-2		
15	Matrix	**1.134** 28.80	Tin-Lead[1]	794330-1	172171-1	794204-1
			Duplex[2]	794330-2		

[1] Tin-Lead Finish — Plated with .000150 [.00381] min. tin-lead over .000050 [.00127] min. nickel underplate on entire contact.
[2] Duplex Finish — Plated with .000030 [.000762] min. gold in mating area and matte tin-lead on solder tail end over .000050 [.00127] min. nickel underplate on entire contact.

For complete product information, order Catalog 82181

Products for Industrial & Commercial Applications
Dimensions are shown for reference purposes only.
Dimensions are in inches and millimeters unless otherwise specified. Values in brackets are metric equivalents.
Specifications subject to change.
Technical Support Center
1-800-522-6752
www.tycoelectronics.com

Right-Angle PC Board Pin Headers

Product Specification:

Centerline spacing—.163 [4.14]

Material:

Housing — Nylon, white color
Flammability Rating — UL94V-0
Contacts — Brass
Solder tail diameter .039 [1.00]

Related Product Data:

Performance Characteristics — page 9058

Technical Documents: pages 9058 and 9080

Product Specification
108-1694 Mini-Universal MATE-N-LOK Headers

Mating Connectors:

Mini-Universal MATE-N-LOK Plug Housings— pages 9061 and 9062
Mini-Universal MATE-N-LOK 2 Plug Housings— pages 9053 and 9054

With Board Lock Feature

1, 2 and 3 Circuit, In-Line

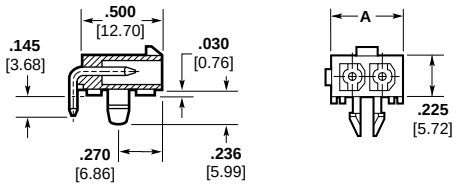

4, 6, 8, 10 and 12 Circuit, Dual Row

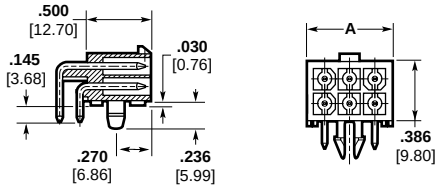

14, 16, 18, 20, 22 and 24 Circuit, Dual Row

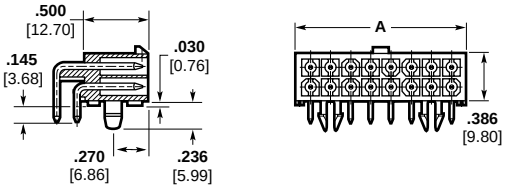

Number of Circuits	Style	A Dim.	Pin Finish	Pin Header Part Numbers with Board Lock	Mates with Plug Housing Part Numbers (Using Socket Contacts)	
					Mini-UMNL	Mini-UMNL 2
1	—	**.225** 5.72	Tin-Lead[1]	794374-1	172164-1	—
			Duplex[2]	794374-2		
2	In-line	**.388** 9.86	Tin-Lead[1]	770966-1	172165-1	794184-1
			Duplex[2]	770966-2		
3	In-line	**.551** 14.00	Tin-Lead[1]	770967-1	172166-1	794186-1
			Duplex[2]	770967-2		
4	Dual Row	**.388** 9.86	Tin-Lead[1]	770968-1	172167-1	794188-1
			Duplex[2]	770968-2		
6	Dual Row	**.551** 14.00	Tin-Lead[1]	770969-1	172168-1	794190-1
			Duplex[2]	770969-2		
8	Dual Row	**.714** 18.14	Tin-Lead[1]	770970-1	770579-1	794192-1
			Duplex[2]	770970-2		
10	Dual Row	**.877** 22.28	Tin-Lead[1]	770971-1	770580-1	794196-1
			Duplex[2]	770971-2		
12	Dual Row	**1.040** 26.42	Tin-Lead[1]	770972-1	770581-1	794198-1
			Duplex[2]	770972-2		
14	Dual Row	**1.203** 30.56	Tin-Lead[1]	770973-1	770582-1	794202-1
			Duplex[2]	770973-2		
16	Dual Row	**1.366** 34.70	Tin-Lead[1]	770974-1	770583-1	794206-1
			Duplex[2]	770974-2		
18	Dual Row	**1.529** 38.84	Tin-Lead[1]	794105-1	770584-1	794208-1
			Duplex[2]	794105-2		
20	Dual Row	**1.692** 42.98	Tin-Lead[1]	794106-1	770585-1	794210-1
			Duplex[2]	794106-2		
22	Dual Row	**1.855** 47.12	Tin-Lead[1]	794107-1	770586-1	794212-1
			Duplex[2]	794107-2		
24	Dual Row	**2.018** 51.26	Tin-Lead[1]	794108-1	770587-1	794214-1
			Duplex[2]	794108-2		

[1] Tin-Lead Finish — Plated with .000150 [.00381] min. tin-lead over .000050 [.00127] min. nickel underplate on entire contact.
[2] Duplex Finish — Plated with .000030 [.000762] min. gold in mating area and matte tin-lead on solder tail end over .000050 [.00127] min. nickel underplate on entire contact.

For complete product information, order Catalog 82181

Products for Industrial & Commercial Applications
Dimensions are shown for reference purposes only.
Dimensions are in inches and millimeters unless otherwise specified. Values in brackets are metric equivalents.
Specifications subject to change.
Technical Support Center
1-800-522-6752
www.tycoelectronics.com

Plug or Cap Housing Strain Reliefs

Related Product Data:

Housings — pages 9061, 9062

Technical Documents: pages 9058 and 9080

These Strain Reliefs may also be used with AMP-DUAC Receptacle housings on page 9087.

6 and 8 Circuit

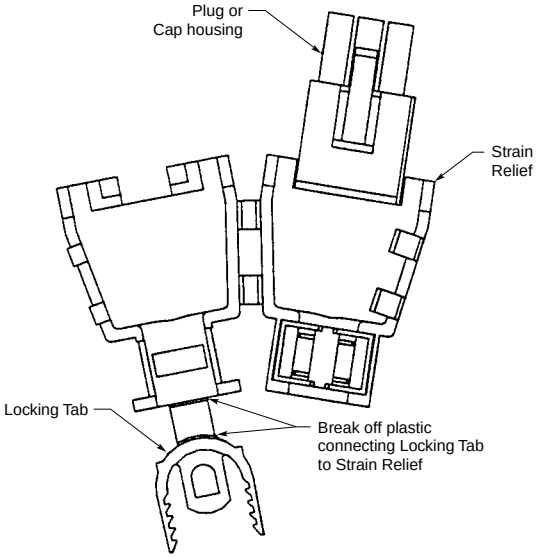

Step 1

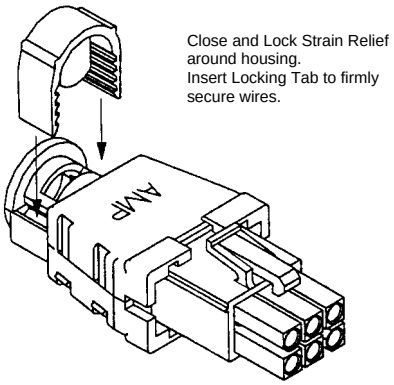

Step 2

Style	Number of Circuits	A Dim.	Wire Bundle Dia. Range	Part Numbers UL94V-0 Nylon, White Color
Dual Row	6	**.920** 23.36	**.165–.220** 4.19–5.59	794423-1
	8	**.920** 23.36	**.180–.245** 4.57–6.22	794370-1

For complete product information, order Catalog 82181

Products for Industrial & Commercial Applications
Dimensions are shown for reference purposes only.
Dimensions are in inches and millimeters unless otherwise specified. Values in brackets are metric equivalents.
Specifications subject to change.
Technical Support Center 1-800-522-6752 www.tycoelectronics.com

Product Facts

- **Available in 2-24 position vertical and right-angle headers for surface mount and through-hole applications**
- **Dual beam contact design**
- **High temperature header housings for IR reflow solder capability**
- **Fully polarized to mating headers and plugs**
- **PCB pegs for board polarization**
- **Footprint compatible and intermateable with other manufacturers**

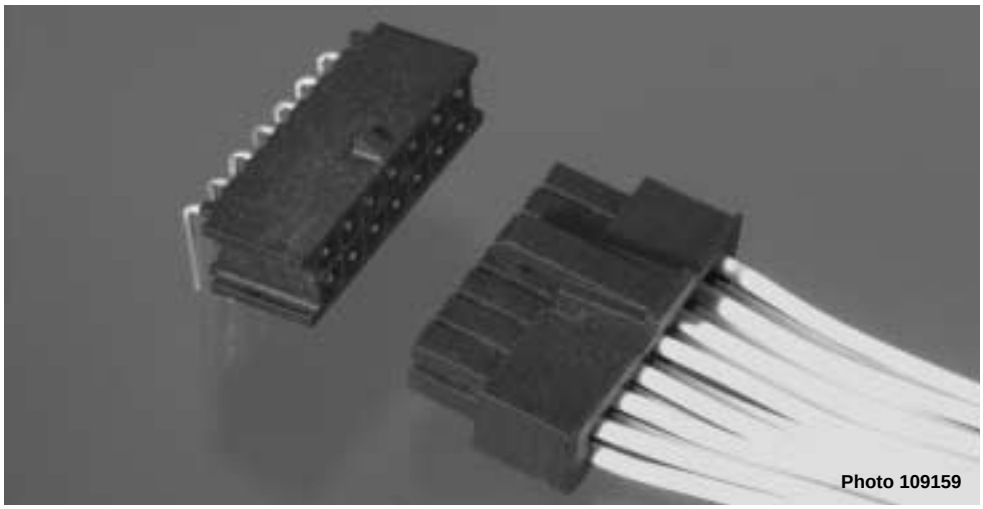

Photo 109159

Material and Finish:

Housing—Nylon, UL 94V-0
Contacts—Phosphor Bronze
Header Pins—Brass
Plating—Tin or Gold 15µ" or 3µ"

RECEPTACLE HOUSING

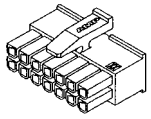

x-794617-x Receptacle Housing

RECEPTACLE CONTACTS

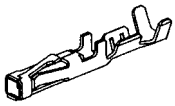

Wire Size	Plating	Part Nos. Strip	Part Nos. Loose Piece	Tooling Part Nos. Applicator	Tooling Part Nos. Hand Tool
20-24 AWG	Tin	794606-1	794610-1	680893-*	91501-1
	15µ"	794606-2	794610-2		
	30µ"	794606-3	794610-3		
26-30 AWG	Tin	794607-1	794611-1	680894-*	91502-1
	15µ"	794607-2	794611-2		
	30µ"	794607-3	794611-3		

* 1= CLS, 2= K-Terminator, 3= G-Terminator
Extraction Tool 843996-3

VERTICAL HEADER ASSEMBLIES

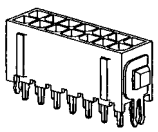

Thru-Hole With Boardlock
x-794680-x Kinked Leg, Tin
x-794681-x Kinked Leg, 15µ" Gold
x-794682-x Kinked Leg, 30µ" Gold
Thru-Hole Without Boardlock
x-794630-x Kinked Leg, Tin
x-794631-x Kinked Leg, 15µ" Gold
x-794632-x Kinked Leg, 30µ" Gold

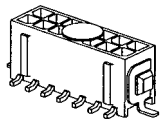

Surface Mount Solder Pad
x-794636-x Tin
x-794637-x 15µ" Gold
x-794638-x 30µ" Gold

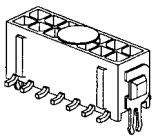

Surface Mount With Mechanical Boardlock
x-794633-x Tin
x-794634-x 15µ" Gold
x-794635-x 30µ" Gold

RIGHT-ANGLE HEADER ASSEMBLIES

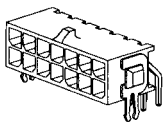

Right-Angle Thru-Hole With Mechanical Boardlock
x-794677-x Tin
x-794678-x 15µ" Gold
x-794679-x 30µ" Gold

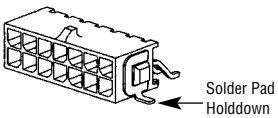

Right-Angle Surface Mount Solder Pad
x-794627-x Tin
x-794628-x 15µ" Gold
x-794629-x 30µ" Gold

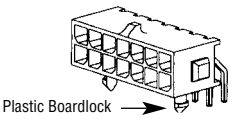

Right-Angle Thru-Hole With Plastic Boardlock
x-794618-x Tin
x-794619-x 15µ" Gold
x-794620-x 30µ" Gold

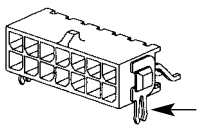

Right-Angle Surface Mount With Boardlocks
x-794621-x Plastic, Tin
x-794622-x Plastic, 15µ" Gold
x-794623-x Plastic, 30µ" Gold
x-794624-x Mechanical, Tin
x-794625-x Mechanical, 15µ" Gold
x-794626-x Mechanical, 30µ" Gold

Note—Base part number prefixes and suffixes (x) indicate the number of circuit positions, e.g. 2-pos. = 0-xxxxxx-2 and 12-pos. = 1-xxxxxx-2

For complete product information, order Catalog 82181

Products for Industrial & Commercial Applications

Dimensions are shown for reference purposes only.

Dimensions are in inches and millimeters unless otherwise specified. Values in brackets are metric equivalents.

Specifications subject to change.

Technical Support Center
1-800-522-6752
www.tycoelectronics.com

Product Facts

- **Housings positively lock to help prevent unintentional disengagement**
- **Either cap or plug housing can be mounted in same rectangular panel cutout without additional hardware**
- **UL94V-0 housings**
- **Plug and cap design includes molded-in polarizing feature to promote proper mating**
- **Numbered cavities for easy circuit identification**
- **Egg crate design of plug half fully encloses socket contacts, reducing shock hazard**
- **Molded skirt extension on cap protects pin contacts**
- **Strain reliefs for 6 thru 36 positions are available**
- **Choice of tin or gold plated contacts**
- **Not for interrupting current**
- **Socket solder tail contacts available for hot side PC board mounting**
- **High density achieved through .165 [4.19] contact centerline spacing**
- **Extraction tool removes both pins and sockets**
- **Contacts accept 26-18 AWG [.12-.8 mm²] wire sizes and insulation diameters of .025-.115 [.635-2.92]**
- **Same applicator crimps pins and sockets**
- **Vertical PC board pin headers are available**
- **Pin header standoffs on housings at board interface facilitate gas venting and cooling during soldering**
- **Recognized under the Component Program of Underwriters Laboratories Inc., File No. E28476**
- **Certified by Canadian Standards Association, File No. LR 7189**

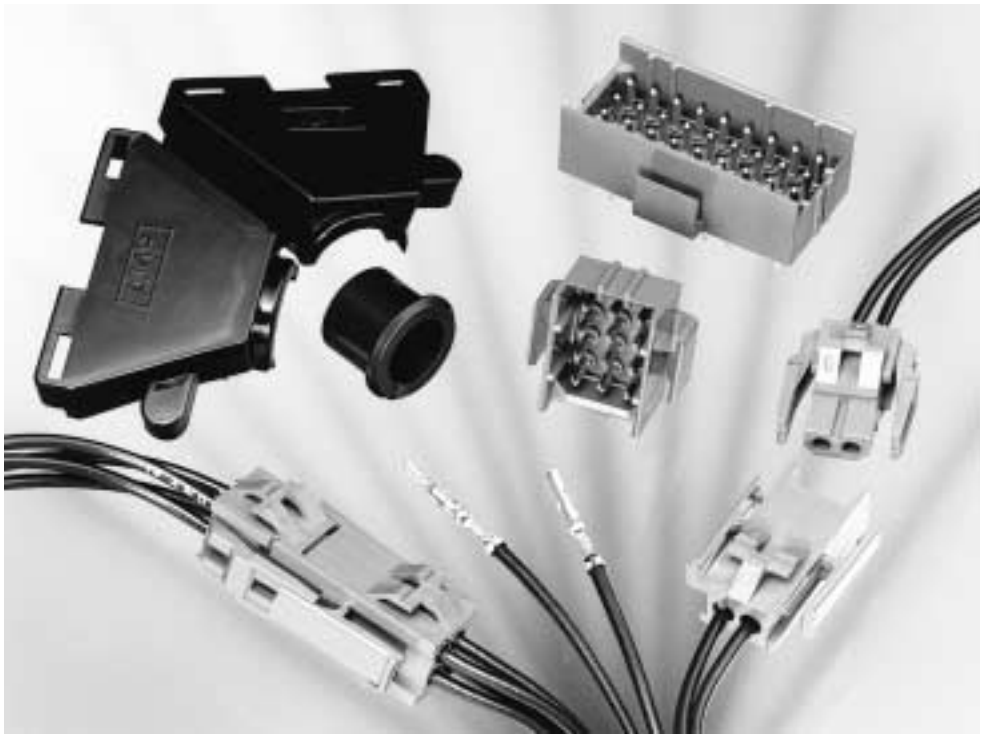

Performance Characteristics:

The Miniature Rectangular Connector performance characteristics found below are based on free hanging and panel mount connectors, loaded with contacts crimped on stranded wire.

Dielectric Withstanding Voltage—2.5 KVAC between adjacent circuits

Insulation Resistance—1500 megohms minimum initial between adjacent circuits

Voltage Rating—250V AC

Connector Mating—Split Pin—1.0 lb. max. per circuit

Connector Unmating—Split Pin—.25 lb. min. per circuit

Contact Insertion Force—1.75 lb. max. per contact

Contact Retention—10 lb. min. per contact

Durability—25 cycles, mating and unmating

Miniature Rectangular connectors also will withstand the following tests:

Vibration—10-55-10 cycles per minute at .06 inch total excursion

Physical Shock—18 drops, 50 G sawtooth at 10 milliseconds

Housing Panel Retention—50 lb. min.

Housing Lock Strength—20 lb. min.

Thermal Shock— −55°C to +85°C

Temperature-Humidity Cycling—25°C to 65°C at 95% RH

Corrosion—48 hr. at 5% salt concentration

Technical Documents:

Product Specifications

108-1022 (MR) Miniature Rectangular Connectors

108-1078 (MR) Miniature Rectangular Headers

Application Specification

114-1014 (MR) Miniature Rectangular Contacts

Instruction Sheet

408-3231 Pin, Socket, Housing, Contacts, and Accessories

For complete product information, order Catalog 82181

Products for Industrial & Commercial Applications

Dimensions are shown for reference purposes only.

Dimensions are in inches and millimeters unless otherwise specified. Values in brackets are metric equivalents.

Specifications subject to change.

Technical Support Center
1-800-522-6752
www.tycoelectronics.com

(MR) Miniature Rectangular Connector Mating Combinations

Connector Part Numbers				Mating Connector Part Numbers			
Number of Circuits	Flammability Rating	Style	Pin Housing (Cap) Part Numbers	Socket Housing (Plug) Part Numbers	PC Board Vertical Pin Headers		
					Plating	.062 Board	.120 Board
2	UL94V-0	In-Line	1-640507-0	1-640517-0	Tin	640497-1	640497-3
					Duplex[1]	640497-2	640497-4
3	UL94V-0	In-Line	1-640508-0	1-640518-0	Tin	640498-1	640498-3
					Duplex[1]	640498-2	640498-4
4	UL94V-0	Matrix	1-640509-0	1-640519-0	Tin	640499-1	640499-3
					Duplex[1]	640499-2	640499-4
6	UL94V-0	Matrix	1-640510-0	1-640520-0	Tin	640500-1	640500-3
					Duplex[1]	640500-2	640500-4
9	UL94V-0	Matrix	1-640511-0	1-640521-0	Tin	640501-1	640501-3
					Duplex[1]	640501-2	640501-4
12	UL94V-0	Matrix	1-640512-0	1-640522-0	Tin	640502-1	640502-3
					Duplex[1]	640502-2	640502-4
15	UL94V-0	Matrix	1-640513-0	1-640523-0	Tin	640503-1	640503-3
					Duplex[1]	640503-2	640503-4
20	UL94V-0	Matrix	1-640514-0	1-640524-0	Tin	640504-1	640504-3
					Duplex[1]	640504-2	640504-4
24	UL94V-0	Matrix	1-640515-0	1-640525-0	Tin	640505-1	640505-3
					Duplex[1]	640505-2	640505-4
36	UL94V-0	Matrix	1-640516-0	1-640526-0	Tin	640506-1	640506-3
					Duplex[1]	640506-2	640506-4

[1] Duplex Finish — Plated with .000030 [.000762] min. gold in mating area, matte tin on solder tail end over .000050 [.00127] min. nickel underplate on entire contact.

Contacts

Product Specifications:

Pin diameter—.068 [1.73]
Stock thickness—.008 [.203]

Material:

Contact—Phosphor bronze

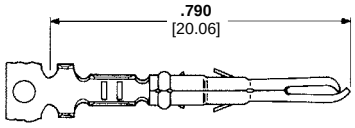

Live Split Pin

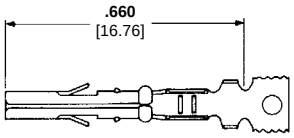

Standard Socket

Wire Size Range AWG [mm²]	Ins. Dia. Range	Finish	Contact Part Numbers				HDM Applicator Part Numbers	Hand Tool Part Numbers
			Live Split Pin		Standard Socket			
			Strip Form	Loose Form	Strip Form	Loose Form		
26-24 [.12-.2]	**.025-.050** .635-1.27	Pre-tin	350968-1	640579-1	794000-1	794001-1	466352-1[3] 466352-2[3] 466352-3[3]	90326-1
		Select Gold[1]	350968-2	640579-2	794000-2	794001-2		
26-18[2] [.12-.8]	**.050-.115** 1.27-2.92	Pre-tin	350967-1	640545-1	641294-1	641300-1	466351-1[3] 466351-2[3] 466351-4[3]	90325-1
		Select Gold[1]	350967-2	640545-2	641294-2	641300-2		

[1] Select Gold Finish — Plated with .000030 min. [.000762] gold in mating area over .000050 [.00127] min. nickel underplate on entire contact.
[2] 1650 CMA maximum.
[3] HDM Applicator part number ending in -1 is used on AMPOMATOR CLS Machine with T or G Terminators, -2 is used on AMP-O-LECTRIC Model K Machine, -3 or -4 is used on AMP-O-LECTRIC Model G Machine. See page 9084 for further information.

Grounding Pin

Product Specifications:

Pin diameter—.068 [1.73]
Stock thickness—.008 [.203]
Mate first, break last, not for interrupting current

Material:

Contact—Phosphor Bronze

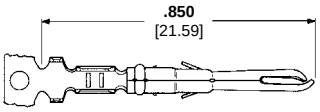

Wire Size Range AWG [mm²]	Ins. Dia. Range	Finish	Pin Part Numbers		HDM Applicator Part Numbers	Hand Tool Part Number
			Strip Form	Loose Form		
26-18[2] [.12-.8]	**.050-.115** 1.27-2.92	Pre-tin	350969-1	640580-1	466351-1[3] 466351-2[3] 466351-4[3]	90325-1
		Select Gold[1]	350969-2	640580-2		

[1] Select Gold Finish — Plated with .000030 [.000762] min. gold in mating area over .000050 [.00127] min. nickel underplate on entire contact.
[2] 1650 CMA maximum.
[3] HDM Applicator part number ending in -1 is used on AMPOMATOR CLS Machine with T or G Terminators, -2 is used on AMP-O-LECTRIC Model K Machine, -3 or -4 is used on AMP-O-LECTRIC Model G Machine. See page 9084 for further information.

Solder Tail Socket

Material and Finish:

Contact—Phosphor bronze, pre-tin or select gold
Stock thickness—.008 [.203]

Keying Plug

IS 408-3231

Related Product Data:

Performance Characteristics — page 9068
Housing—page 9071 thru 9073
Application Tooling — pages 9081, 9082 and 9084

Technical Documents: pages 9068 and 9080

Product Specification
108-1022 (MR) Miniature Rectangular Connectors

Application Specification
114-1014 (MR) Miniature Rectangular Contacts

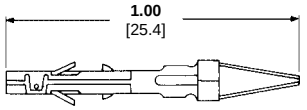

Part Number 350838-1 **(Pre-tin)**
Part Number 350838-1 **(Select Gold Stripe)**
Note: Recommended for use with MR Socket Housings

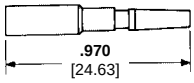

Part Number 350591-1
UL94V-0 Nylon material
Note: Use in socket housings only.

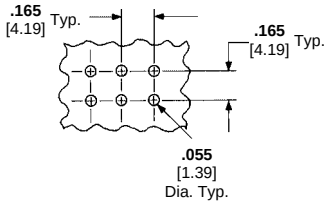

Recommended PC Board Hole Layout
.062 [1.57] or .093 [2.36] thick board



Contact Extraction Tool
Part Number 455822-2
IS 408-9570



Contact Insertion Tool
(For inserting contacts applied to small diameter wire)
Part Number 455830-1
IS 408-7984

For complete product information, order Catalog 82181

Products for Industrial & Commercial Applications
Dimensions are shown for reference purposes only.
Dimensions are in inches and millimeters unless otherwise specified. Values in brackets are metric equivalents.
Specifications subject to change.
Technical Support Center
1-800-522-6752
www.tycoelectronics.com

Housings, Free Hanging or Panel Mount

Product Specification:

Centerline spacing—.165 [4.19]

Material:

Housing—Nylon, Natural Color-Brick Red

Flammability Rating—UL94V-0

Related Product Data:

Performance Characteristics—page 9068

Panel Cutout Recommendations—page 9073

Contacts—page 9070

Keying Plug—page 9070

Strain Reliefs—page 9074

Commoning Bar—page 9074

Mating Headers—page 9075 thru 9076

Technical Document: page 9068 and 9080

Product Specification
108-1022 (MR) Miniature Rectangular Connectors

2 and 3 Circuit, In-Line

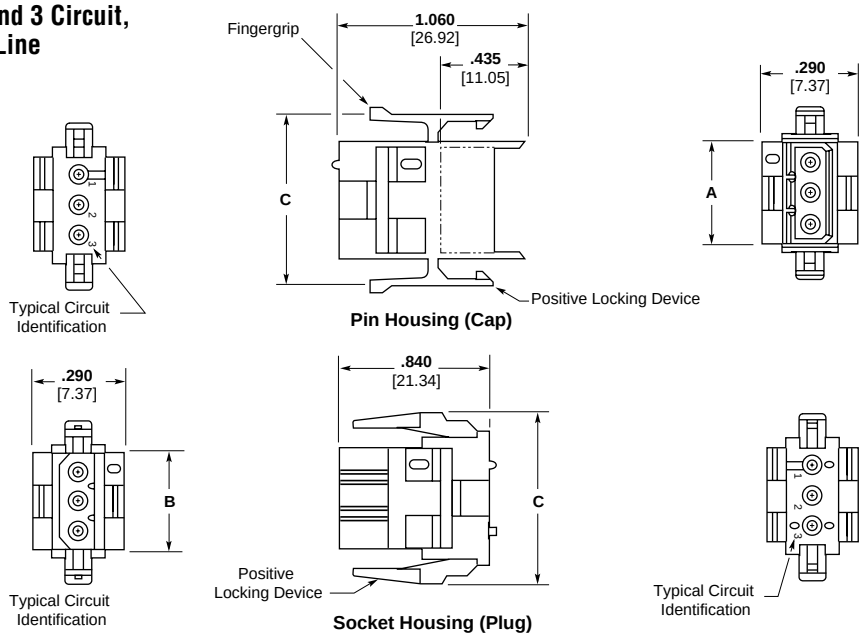

Number of Circuits	Dimensions A	Dimensions B	Dimensions C	Part Numbers Pin Housing (Cap)	Part Numbers Socket Housing (Plug)
2	**.455** 11.56	**.365** 9.27	**.755** 19.18	1-640507-0	1-640517-0
3	**.620** 15.75	**.530** 13.46	**.920** 23.37	1-640508-0	1-640518-0

4 and 6 Circuit, Matrix

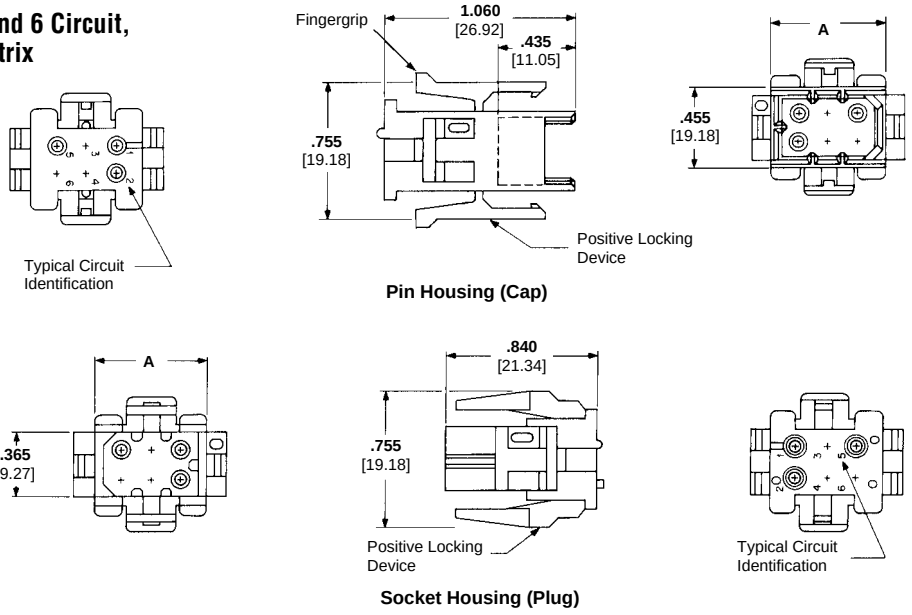

Number of Circuits	A Dim.	Part Numbers Pin Housing (Cap)	Part Numbers Socket Housing (Plug)
4	**.455** 11.56	1-640509-0	1-640519-0
6	**.620** 15.75	1-640510-0	1-640520-0

For complete product information, order Catalog 82181

Products for Industrial & Commercial Applications
Dimensions are shown for reference purposes only.
Dimensions are in inches and millimeters unless otherwise specified. Values in brackets are metric equivalents.
Specifications subject to change.
Technical Support Center 1-800-522-6752 www.tycoelectronics.com

Housings, Free Hanging or Panel Mount

Product Specification:

Centerline spacing—.165 [4.19]

Material:

Housing—Nylon, Natural Color-Brick Red

Flammability Rating—UL94V-0

Related Product Data:

Performance Characteristics—page 9068

Panel Cutout Recommendations—page 9073

Contacts—page 9070

Keying Plug—page 9070

Strain Reliefs—page 9074

Commoning Bar—page 9074

Mating Headers—pages 9075 thru 9076

Technical Document: page 9068 and 9080

Product Specification
108-1022 (MR) Miniature Rectangular Connectors

9, 12 and 15 Circuit, Matrix

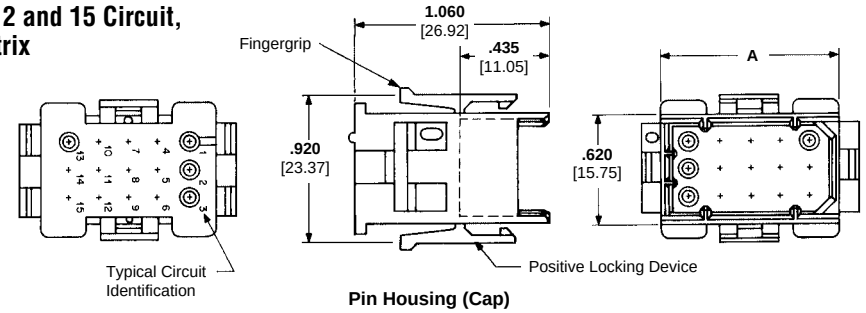

Pin Housing (Cap)

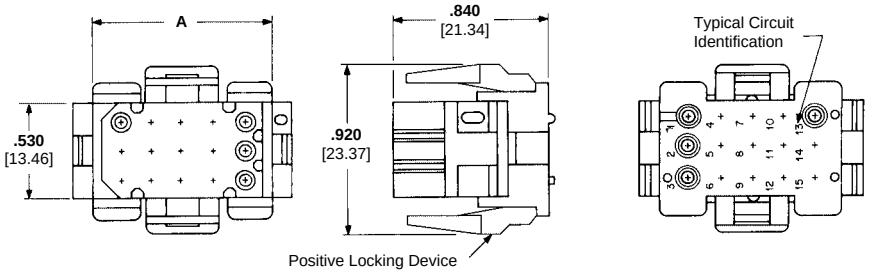

Socket Housing (Plug)

20 and 24 Circuit, Matrix

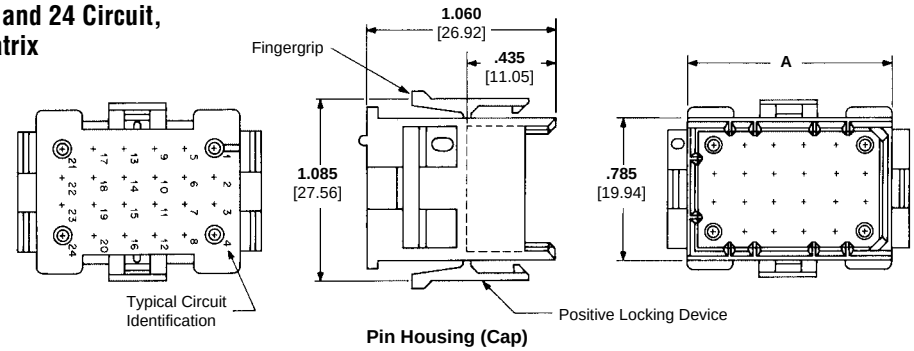

Pin Housing (Cap)

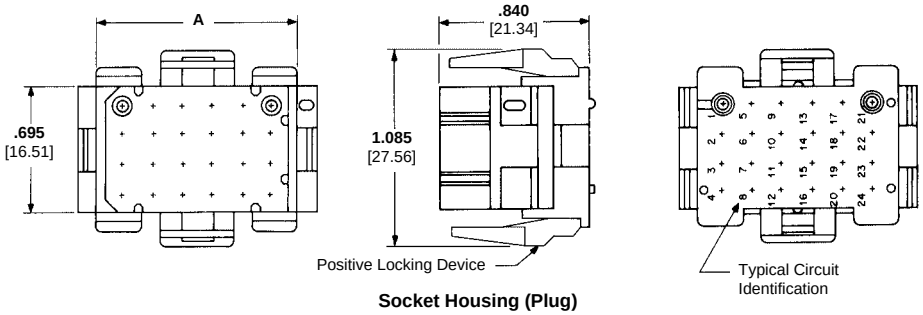

Socket Housing (Plug)

Number of Circuits	A Dim.	Part Numbers	
		Pin Housing (Cap)	Socket Housing (Plug)
9	**.620** 15.75	1-640511-0	1-640521-0
12	**.785** 19.94	1-640512-0	1-640522-0
15	**.950** 24.13	1-640513-0	1-640523-0
20	**.950** 24.13	1-640514-0	1-640524-0
24	**1.115** 28.32	1-640515-0	1-640525-0

For complete product information, order Catalog 82181

Products for Industrial & Commercial Applications
Dimensions are shown for reference purposes only.
Dimensions are in inches and millimeters unless otherwise specified. Values in brackets are metric equivalents.
Specifications subject to change.
Technical Support Center
1-800-522-6752
www.tycoelectronics.com

Housings, Free Hanging or Panel Mount

Product Specification:

Centerline spacing—.165 [4.19]

Material:

Housing—Nylon, Natural Color-Brick Red

Flammability Rating—UL94V-0

Related Product Data:

Performance Characteristics—page 9068

Contacts—page 9070

Housings—page 9071 thru 9073

Keying Plug—page 9070

Strain Reliefs—page 9074

Commoning Bar—page 9074

Mating Headers—pages 9075 thru 9076

Technical Documents: page 9068 and 9080

Product Specification
108-1022 (MR) Miniature Rectangular Connectors

36 Circuit, Matrix

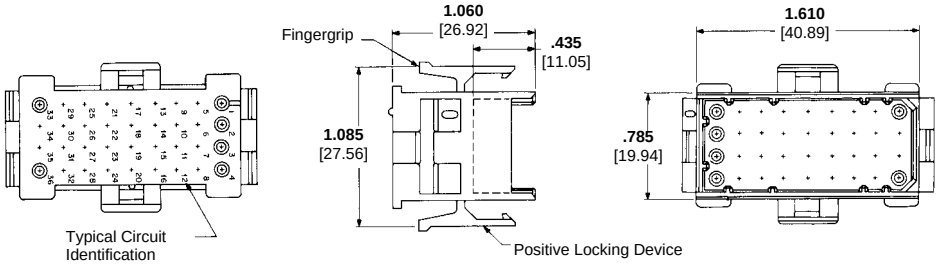

Pin Housing (Cap)

Part Number
1-640516-0

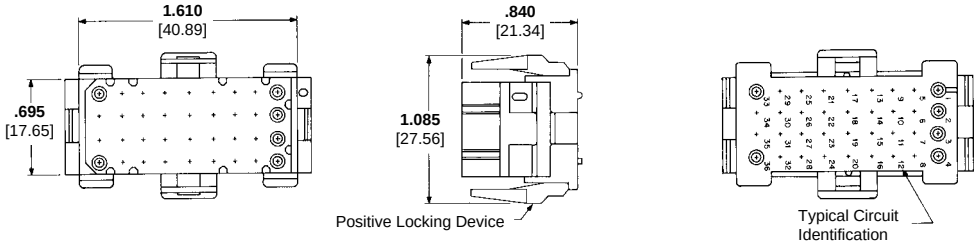

Socket Housing (Plug)

Part Number
1-640526-0

Recommended Panel Cutout for Pin and Socket Housings

View is from housing entry side

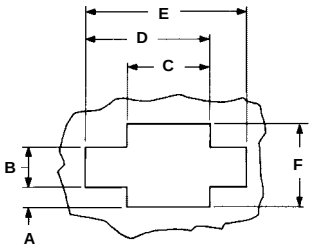

Panel Thickness .068 [1.75] Max.

Number of Circuits	Panel Cutout Dimensions					
	A	B	C	D	E	F
2	**.105** 2.67	**.220** 5.59	**.475** 12.07	**.630** 16.00	**.785** 19.94	**.430** 10.92
3	**.105** 2.67	**.220** 5.59	**.640** 16.26	**.795** 20.19	**.950** 24.13	**.430** 10.92
4	**.157** 3.99	**.280** 5.28	**.475** 12.07	**.630** 16.00	**.785** 19.94	**.595** 15.11
6	**.208** 5.28	**.345** 8.76	**.475** 12.07	**.630** 16.00	**.785** 19.94	**.760** 19.30
9	**.208** 5.28	**.345** 8.76	**.640** 16.26	**.795** 20.19	**.950** 24.13	**.760** 19.30
12	**.225** 5.72	**.475** 12.07	**.640** 16.26	**.795** 20.19	**.950** 24.13	**.925** 23.50
15	**.308** 7.82	**.475** 12.07	**.640** 16.26	**.795** 20.19	**.950** 24.13	**1.090** 27.69
20	**.308** 7.82	**.475** 12.07	**.805** 20.45	**.960** 24.38	**1.115** 28.32	**1.090** 27.69
24	**.390** 9.91	**.475** 12.07	**.805** 20.45	**.960** 24.38	**1.115** 28.32	**1.255** 31.88
36	**.625** 15.86	**.500** 12.70	**.800** 20.32	**.950** 24.13	**1.100** 27.94	**1.750** 44.45

Notes: 1. When mounted in a .060 [1.52] thick panel, the cap's mating end extends .800 [20.32] beyond the panel front; wire end extends .220 [55.88] from the panel rear. Plug mating end extends .580 [14.73] beyond the panel front; wire end extends .220 [55.88] from the panel rear.
2. The panel should be punched so that the housing enters the panel in the same direction as the punch for ease of assembly.

For complete product information, order Catalog 82181

Products for Industrial & Commercial Applications
Dimensions are shown for reference purposes only.
Dimensions are in inches and millimeters unless otherwise specified. Values in brackets are metric equivalents.
Specifications subject to change.
Technical Support Center
1-800-522-6752
www.tycoelectronics.com

Accessories

One-Piece Clam Shell Strain Reliefs

(Illustrated in closed position)
IS 408-3231

Material:

Housing—Nylon, Color-Brick Red or Black
Flammability Rating—UL94V-0 (Brick Red) or UL94V-2 (Black)

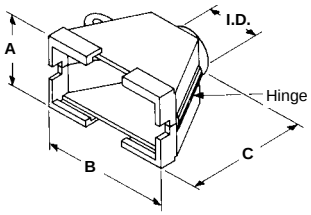

6, 9, 12, 15 and 20 Circuit

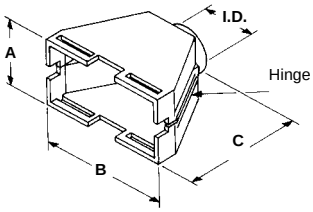

24 and 36 Circuit

Number of Circuits	Dimensions				Part Numbers	
	I.D.	A	B	C	UL94V-0	UL94V-2
6	**.374** 9.50	**.634** 16.10	**.760** 19.30	**1.000** 25.4	350373-1	1-350373-9
9	**.420** 10.67	**.800** 20.32	**.760** 19.30	**1.000** 25.4	350522-1	1-350522-9
12	**.420** 10.67	**.790** 20.07	**.925** 23.50	**1.000** 25.4	350374-1	1-350374-9
15	**.420** 10.67	**.790** 20.07	**1.090** 27.69	**1.000** 25.4	350523-1	1-350523-9
20	**.560** 14.22	**.960** 24.38	**1.090** 27.69	**1.280** 23.51	480634-1	1-480634-9
24	**.560** 14.22	**.900** 22.86	**1.255** 31.88	**1.280** 23.51	350524-1	1-350524-9
36	**.560** 14.22	**.900** 22.86	**1.750** 44.45	**1.280** 23.51	480594-1	1-480594-9

Notes: These strain reliefs can be used with either pin or socket housings.
Customer supplied: One No. 6 Panhead Type B self-taping screw, 3/8 long. Plating is optional to conform to customer requirements.

Adapting Grommet

IS 408-3231

Material:

Housing—Flexible PVC (55/75 Durometer) black color

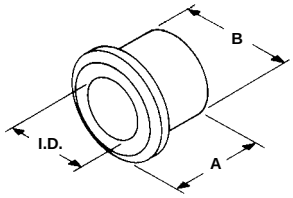

Number of Circuits	Dimensions			Part Numbers
	I.D.	A	B	
6	**.156** 3.96	**.375** 9.53	**.375** 9.53	1-350377-0
	.218 5.54	**.375** 9.53	**.375** 9.53	1-350376-0
	.296 7.52	**.375** 9.53	**.375** 9.53	1-350375-0
9, 12 & 15	**.218** 5.54	**.375** 9.53	**.420** 10.67	1-350378-1
	.250 6.35	**.375** 9.53	**.420** 10.67	1-350379-1
	.281 7.14	**.375** 9.53	**.420** 10.67	1-350380-1
20, 24 & 36	**.437** 11.10	**.500** 12.70	**.562** 14.27	1-380935-0
	.375 9.53	**.500** 12.70	**.562** 14.27	1-380936-0
	.312 7.92	**.500** 12.70	**.562** 14.27	1-380937-0

Commoning Bar

IS 408-3231

Material:

Finish—Brass
Stock thickness—.008 [.203]

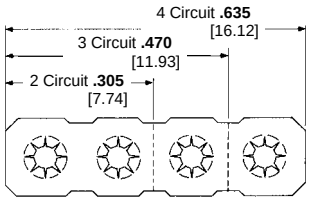

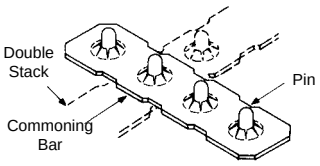

Finish	Part Numbers		
	2 Circuit	3 Circuit	4 Circuit
Pre-tin	350020-1	350021-1	350022-1
Gold[1]	350020-2	350021-2	350022-2

[1] Gold Finish — Plated with .000030 [.000762] min. gold over .000050 [.00127] min. nickel underplate on entire contact.

Related Product Data:

Housings — pages 9071 thru 9073

Notes:
1. Commoning bars can be used to common adjacent pin contacts in any column or row. Maximum stack per pin is two.
2. The above illustrates the proper insertion of the Commoning Bar.
3. Use the mating socket housing to assemble the Commoning Bar onto the pins.



Commoning Bar Extraction Tool
Part Number 457306-1
IS 408-3231

For complete product information, order Catalog 82181

Products for Industrial & Commercial Applications
Dimensions are shown for reference purposes only.
Dimensions are in inches and millimeters unless otherwise specified. Values in brackets are metric equivalents.
Specifications subject to change.
Technical Support Center
1-800-522-6752
www.tycoelectronics.com

PC Board Vertical Pin Headers

Product Specification:

Centerline spacing—.165 [4.19]

Material:

Housing — Nylon, Natural Color-Brick Red

Flammability Rating — UL94V-0

Contacts — Phosphor bronze
Solder tail diameter .040 [1.02]

Related Product Data:

Mating Socket Housings — pages 9071 thru 9072

Technical Document: pages 9068 and 9080

Product Specification
108-1078 (MR) Miniature Rectangular Headers

2 and 3 Circuit, In-Line

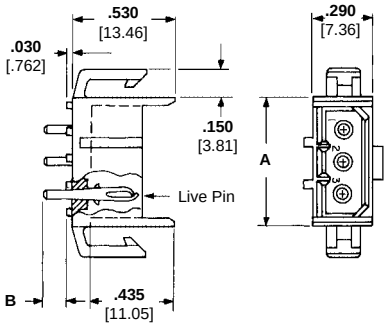

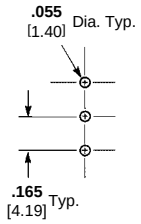

Recommended PC Board Hole Layout

4 and 6 Circuit, Matrix

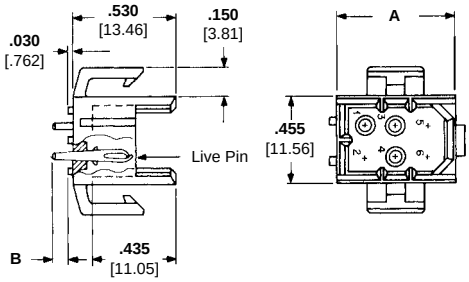

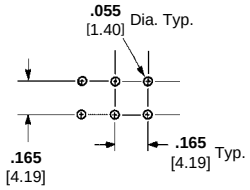

Recommended PC Board Hole Layout

9, 12 and 15 Circuit, Matrix

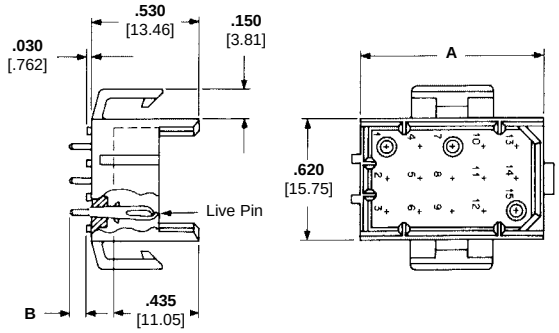

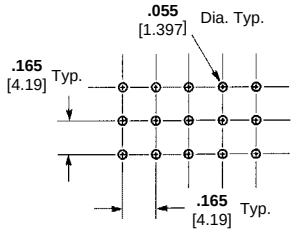

Recommended PC Board Hole Layout

For complete product information, order Catalog 82181

Products for Industrial & Commercial Applications
Dimensions are shown for reference purposes only.
Dimensions are in inches and millimeters unless otherwise specified. Values in brackets are metric equivalents.
Specifications subject to change.
Technical Support Center
1-800-522-6752
www.tycoelectronics.com

PC Board Vertical Pin Headers

20, 24 and 36 Circuit, Matrix

Product Specification:

Centerline spacing—.165 [4.19]

Material:

Housing—Nylon, Natural Color-Brick Red

Flammability Rating—UL94V-0

Contacts—Phosphor bronze
Solder tail diameter .040 [1.02]

Related Product Data:

Mating Socket Housings—pages 9072 thru 9073

Technical Document: page 9068 and 9080

Product Specification
108-1078 (MR) Miniature Rectangular Headers

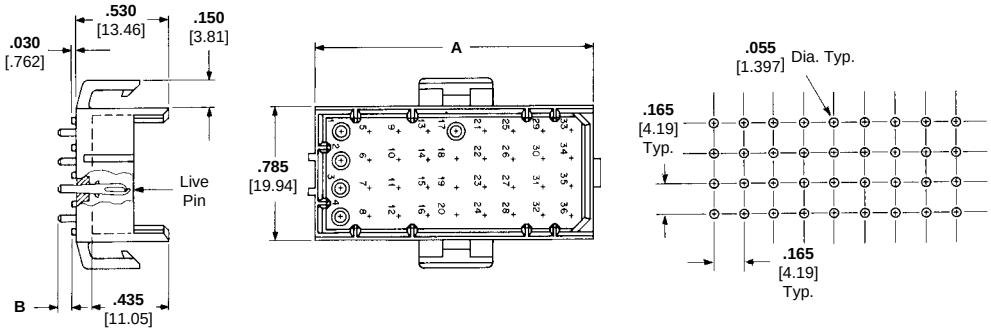

Recommended PC Board Hole Layout

Number of Circuits	PC Board Thickness	Dimensions A	Dimensions B	Part Numbers: Tin Finish Contacts	Part Numbers: Duplex Finish Contacts[1]	Mates with Socket Housing Part Numbers
2	**.062** 1.57	**.455** 11.56	**.120** 3.05	640497-1	640497-2	1-640517-0
	.120 3.05	**.455** 11.56	**.180** 4.57	640497-3	640497-4	
3	**.062** 1.57	**.620** 15.75	**.120** 3.05	640498-1	640498-2	1-640518-0
	.120 3.05	**.620** 15.75	**.180** 4.57	640498-3	640498-4	
4	**.062** 1.57	**.455** 11.56	**.120** 3.05	640499-1	640499-2	1-640519-0
	.120 3.05	**.455** 11.55	**.180** 4.57	640499-3	640499-4	
6	**.062** 1.57	**.620** 15.75	**.120** 3.05	640500-1	640500-2	1-640520-0
	.120 3.05	**.620** 15.75	**.180** 4.57	640500-3	640500-4	
9	**.062** 1.57	**.620** 15.75	**.120** 3.05	640501-1	640501-2	1-640521-0
	.120 3.05	**.620** 15.75	**.180** 4.57	640501-3	640501-4	
12	**.062** 1.57	**.785** 19.94	**.120** 3.05	640502-1	640502-2	1-640522-0
	.120 3.05	**.785** 19.94	**.180** 4.57	640502-3	640502-4	
15	**.062** 1.57	**.950** 24.13	**.120** 3.05	640503-1	640503-2	1-640523-0
	.120 3.05	**.950** 24.13	**.180** 4.57	640503-3	640503-4	
20	**.062** 1.57	**.950** 24.13	**.120** 3.05	640504-1	640504-2	1-640524-0
	.120 3.05	**.950** 24.13	**.180** 4.57	640504-3	640504-4	
24	**.062** 1.57	**1.115** 28.32	**.120** 3.05	640505-1	640505-2	1-640525-0
	.120 3.05	**1.115** 28.32	**.180** 4.57	640505-3	640505-4	
36	**.062** 1.57	**1.610** 40.89	**.120** 3.05	640506-1	640506-2	1-640526-0
	.120 3.05	**1.610** 40.89	**.180** 4.57	640506-3	640506-4	

[1] Duplex Finish—Plated with .000030 [.000762] min. gold in mating area, matte tin on solder tail end over .000050 [.00127] min. nickel underplate on entire contact.

For complete product information, order Catalog 82181

Products for Industrial & Commercial Applications
Dimensions are shown for reference purposes only.
Dimensions are in inches and millimeters unless otherwise specified. Values in brackets are metric equivalents.
Specifications subject to change.
Technical Support Center
1-800-522-6752
www.tycoelectronics.com

Product Facts

- Polarized
- Cavity identification
- Low contact-mating force
- Dual locking lances
- Detent and positive locking
- Contacts available in brass and phosphor bronze with tin and gold plating
- Panel-mounting and free-hanging styles
- "F" crimp contacts
- Applicator and hand tool available
- Economical commercial-grade connectors
- Compatible with high-speed application machinery and competitive soft shells
- Wire range from 30 to 18 AWG [0.05 to 0.9 mm²]
- Accepts wires with insulation diameters as large as .110 [2.79]
- Housings available in 1 to 9 positions
- .062 plug and receptacle housings accept pin or socket contacts. The preferred convention is to use socket contacts with receptacle housings
- Not for interrupting current
- Recognized under the Component Program of Underwriters Laboratories Inc., File No. E28476
- Certified by Canadian Standards Association, File No. LR 7189



Performance Characteristics:

The .062 Commercial Pin and Socket Connectors performance characteristics found below are based on free hanging and panel mount connectors, loaded with contacts crimped on stranded wire.

Durability—10 mating cycles

Dielectric Withstanding Voltage—1.0 kVAC

Insulation Resistance—1000 megohms min. initial

Voltage Rating—250 V AC or DC

Connector Mating—2.5 lb. [11.1 N] max. per contact

Connector Unmating—0.3 lb. [1.3 N] min. per contact

Contact Insertion Force—4.0 lb. [17.8 N] max. per contact

Contact Retention—7 lb. [31.1 N] min.

15 lb. [66.6N] min. for contacts 770983-1 and 794380-1

Technical Documents:

Product Specification
108-1037

Application Specification
114-1013

For complete product information, order Catalog 82181

Contacts

Product Specification:

Pin Diameter—.062 [1.57]

Material:

Stock Thickness—.008 [0.20]

Pin and socket contacts can be used in either plug or receptacle housings.

Related Product Data:

Performance Characteristics — page 9077

Housings — page 9079

Application Tooling — pages 9081, 9082 and 9084

Technical Documents: pages 9077 and 9080

Product Specification 108-1037

Application Specification 114-1013

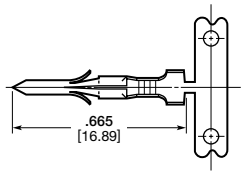

Pin

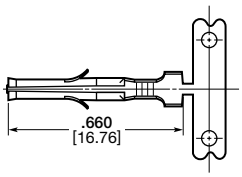

Socket

Wire Size AWG	Wire Size mm²	Ins. Dia.	Material & Finish	Contact Part Numbers Pin Strip Form	Pin Loose Form	Socket Strip Form	Socket Loose Form	HDM Applicator Part Numbers	Hand Tool Part Numbers
30–24	0.05–0.2	**.060** 1.52 Max.	Brass Pre-tin	640391-1	794018-1	640392-1	794019-1	466686-1[3] 466686-2[3] 466686-3[3]	90870-1
				—	—	794046-1[2]	—		
			Brass, Select Gold[1]	640391-5[1]	—	640392-5[1]	—		
			Phos. Brz., Pre-tin	—	—	640392-2	—		
24–18	0.2–0.9	**.050–.110** 1.27–2.79	Brass Pre-tin	350629-1	794017-1	350628-1	794016-1	687996-1[3] 687996-2[3] 687996-3[3]	90869-1
				770983-1[4]	—	794380-1[4]	—		
						794103-1[2]			
			Phos. Brz., Pre-tin	—	—	350628-2	—		
			Brass, Select Gold[1]	350629-5[1]	—	350628-5[1]	—		
			Phos. Brz., Select Gold[1]	—	—	350628-6[1]	—		

[1] Select Gold—.000030 min. in mating area over .000050 nickel.
[2] Lanceless Socket for Overmolding.
[3] HDM Applicator part number ending in -1 is used on AMPOMATOR CLS Machine with T or G Terminators, -2 is used on AMP-O-LECTRIC Model K Machine, -3 is used on AMP-O-LECTRIC Model G Machine. See page 9084 for further information.
[4] Contact Retention 15 lbs. min.

Note: Phosphor bronze contacts should be used in high-temperature/humidity cycling applications.



Contact Insertion Tool (for Pins and Sockets)
Part Number 91002-1
IS 408-7347



Contact Extraction Tool
Part Number 318831-1
IS 408-4370

For complete product information, order Catalog 82181

Products for Industrial & Commercial Applications
Dimensions are shown for reference purposes only.
Dimensions are in inches and millimeters unless otherwise specified. Values in brackets are metric equivalents.
Specifications subject to change.
Technical Support Center 1-800-522-6752 www.tycoelectronics.com

Housings, Free Hanging or Panel Mount

Product Specification:

Centerline spacing—.145 [3.68]

Material:

Housing—Nylon, natural color
Flammability Rating—UL94V-2

Technical Document:

Product Specification
108-1037

1 Circuit

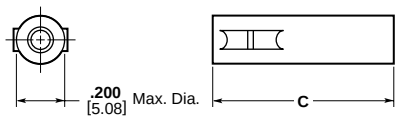

Receptacle

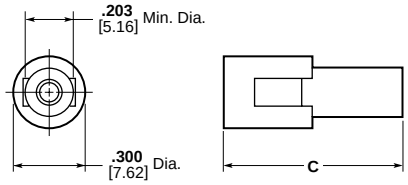

Plug

2, 3, and 4 Circuit, In-Line

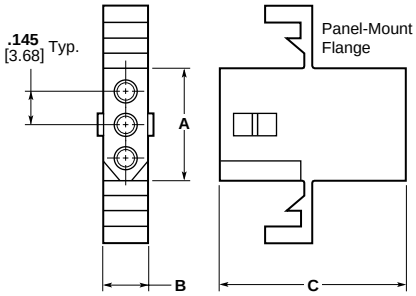

Receptacle

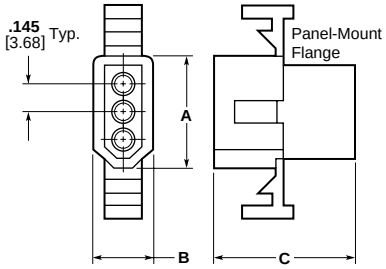

Plug

No. of Circuits	Dimensions						Receptacle Part Numbers		Plug Part Numbers	
	Receptacle			Plug			Panel Mount	Free Hanging	Panel Mount	Free Hanging
	A	B	C	A	B	C				
1	—	—	.785 19.94	—	—	.750 19.05	—	770277-1	—	770278-1
2	.340 8.64	.199 5.05	.820 20.83	.440 11.18	.300 7.62	.780 19.81	770343-1	770342-1 770419-1[1]	770341-1	770340-1
3	.490 12.45	.199 5.05	.785 19.94	.590 14.99	.300 7.62	.750 19.05	770326-1	770333-1	770332-1	770331-1
4 (In-Line)	.635 16.13	.199 5.05	.785 19.94	.733 18.62	.300 7.62	.750 19.05	770335-1	770274-1	770334-1	770275-1
4 (Matrix)	.345 8.76	.345 8.76	.878 22.30	.445 11.30	.445 11.30	.868 22.04	770441-1	770442-1 794124-1[2]	770443-1	770433-1
6	.345 8.76	.495 12.57	.785 19.94	.445 11.30	.600 15.24	.750 19.05	770354-1	770356-1	770353-1	770355-1
9	.490 12.45	.495 12.57	.790 20.07	.590 14.99	.600 15.24	.750 19.05	770427-1	770429-1	770426-1	770428-1

[1] Positive Lock
[2] Housing fits through a .395 [10.03] dia. cutout.

4, 6, and 9 Circuit, Matrix

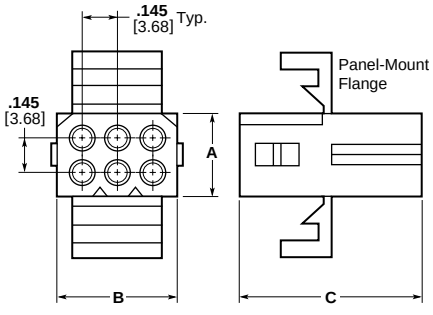

Receptacle

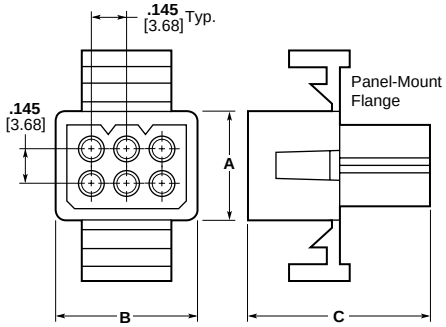

Plug

For complete product information, order Catalog 82181

Technical Documents

Related Product Data:

Connectors:

Universal MATE-N-LOK II — pages 9003 thru 9014
Universal MATE-N-LOK — pages 9015 thru 9028
Commercial MATE-N-LOK — pages 9029 thru 9040
.140 MATE-N-LOK — pages 9041 thru 9043
.093 [2.36] Commercial Pin and Socket — pages 9044 thru 9049
Mini-Universal MATE-N-LOK 2 — pages 9050 thru 9057
Mini-Universal MATE-N-LOK — pages 9058 thru 9066
(MR) Miniature Rectangular — pages 9068 thru 9076
.062 [1.57] Commercial Pin and Socket — pages 9077 thru 9079

Various technical documents are available for your use:

Product Specifications describe technical performance characteristics and verification tests. They are intended for the Design, Component and Quality Engineer.

108-1090 Universal MATE-N-LOK II Connector
108-1031 Universal MATE-N-LOK Connector
108-1053 Universal MATE-N-LOK Printed Circuit Board Header
108-1031-1 Universal MATE-N-LOK Splash Proof Seal
108-1000 Commercial MATE-N-LOK Connector
108-1077 Commercial MATE-N-LOK Printed Circuit Board Header
108-49000 Commercial MATE-N-LOK IDC Insulation Displacement Connector
108-8002 .156 Diameter MATE-N-LOK Connector
108-1032 .140 Diameter MATE-N-LOK Pin and Socket Connector
108-1038 .093 Commercial Pin and Socket Connectors
108-1693 Mini-Universal MATE-N-LOK 2 Connectors
108-1694 Mini-Universal MATE-N-LOK 2 Headers
108-1542 Mini-Universal MATE-N-LOK Connectors
108-1543 Mini-Universal MATE-N-LOK Headers
108-5151 Mini-Universal MATE-N-LOK Connector (UL 94V-2)
108-5138 Mini-Universal MATE-N-LOK Connector (UL 94V-0)
108-1022 (MR) Miniature Rectangular Connector
108-1078 (MR) Miniature Rectangular Printed Circuit Board Header
108-1037 .062 Commercial Pin and Socket Connectors

Application Specifications describe requirements for using the product in its intended application and/or crimping information. They are intended for the Packaging and Design Engineer and the Machine Setup Person.

114-1043 Universal MATE-N-LOK II Connectors (housings, contacts and strain reliefs)
114-1010 Universal MATE-N-LOK Contact
114-1012 Commercial MATE-N-LOK Contact
114-49001 Commercial MATE-N-LOK IDC Insulation Displacement Connector
114-1109 .156 Diameter MATE-N-LOK Connectors
114-1007 .140 Diameter MATE-N-LOK Contact
114-49000 .093 Commercial Pin and Socket Connectors
114-1111 Mini-Universal MATE-N-LOK 2 Connectors
114-16017 Mini-Universal MATE-N-LOK Connectors
114-1014 MR Miniature Rectangular Contact
114-1013 .062 Commercial Pin and Socket Connectors

Instruction Sheets provide instructions for assembling or applying the product. They are intended for the Manufacturing Assembler or Operator.

Universal MATE-N-LOK II Connectors: 408-3200 Housing, Contacts and Accessories

Universal MATE-N-LOK Connectors: 408-7714 Plug, Cap Header, Pin and Socket Contacts;
408-3320 Strain Relief Assembly and Keying Plug
408-3392 Universal MATE-N-LOK Splash Proof Seals

Commercial MATE-N-LOK Connectors:
408-3186 IDC Insulation Displacement Connector
408-7166 Panel Mount Connector
408-7200 Free-Hanging Connector
408-7201 Detent Engagement Connectors -2 and 3 circuit
408-7209 Commoning Tabs
408-7215 Single Circuit Connector

Mini-Universal MATE-N-LOK 2 Connectors: 408-3393 Mini-Universal MATE-N-LOK 2 Connectors

Mini-Universal MATE-N-LOK Connectors: 408-3234 Mini-Universal MATE-N-LOK Connectors

(MR) Miniature Rectangular Connectors: 408-3231 Pin Housing, Socket Housing, Contacts, and Accessories

For complete product information, order Catalog 82181

Products for Industrial & Commercial Applications
Dimensions are shown for reference purposes only.
Dimensions are in inches and millimeters unless otherwise specified. Values in brackets are metric equivalents.
Specifications subject to change.
Technical Support Center 1-800-522-6752 www.tycoelectronics.com

Applicator and Hand Tool Selection Guide

Related Product Data:

Contacts:

Universal MATE-N-LOK II — page 9005
Universal MATE-N-LOK — page 9017 and 9018
Commercial MATE-N-LOK — page 9032 and 9033
.140 MATE-N-LOK — page 9042
.093 [2.36] Commercial Pin and Socket Connectors — page 9045
Mini-Universal MATE-N-LOK 2 — page 9052
Mini-Universal MATE-N-LOK — page 9060
(MR) Miniature Rectangular — page 9070
.062 [1.57] Commercial Pin and Socket Connectors — page 9078

Product Line	Applicators			Hand Tools	
	A	B	C	D	E
Universal MATE-N-LOK II	X	X	X	X	X
Universal MATE-N-LOK	X	X	X	X	X
Commercial MATE-N-LOK	X	X	X	X	X
.156 MATE-N-LOK	X	—	—	X	—
.140 MATE-N-LOK	X	X	X	X	—
.093 [2.36] Commercial Pin and Socket Connectors	X	X	X	—	X
Mini-Universal MATE-N-LOK 2	X	X	X	X	X
Mini-Universal MATE-N-LOK	X	X	X	X	X
(MR) Miniature Rectangular	X	X	X	X	—
.062 [1.57] Commercial Pin and Socket Connectors	X	X	X	—	X

A– Heavy Duty Miniature Applicators (HDM)
B– Stripper-Crimper Applicators (SCA)
C– Crimp Quality Monitor Applicators (CQM)
D– CERTI-CRIMP Hand Tool
E– PRO-CRIMPER II Hand Tool

Note: This listing is for reference purposes only. To obtain part numbers for specific applications call the Technical Support Center (1-800-522-6752).

For complete product information, order Catalog 82181

Products for Industrial & Commercial Applications
Dimensions are shown for reference purposes only.
Dimensions are in inches and millimeters unless otherwise specified. Values in brackets are metric equivalents.
Specifications subject to change.
Technical Support Center
1-800-522-6752
www.tycoelectronics.com

Hand Tools

Related Product Data:

Contacts:

Universal MATE-N-LOK II — page 9005
Universal MATE-N-LOK — pages 9017 and 9018
Commercial MATE-N-LOK — pages 9032 and 9033
.140 MATE-N-LOK — page 9042
.093 [2.36] Commercial Pin and Socket Connectors — page 9045
Mini-Universal MATE-N-LOK 2 — page 9052
Mini-Universal MATE-N-LOK — page 9060
(MR) Miniature Rectangular — page 9070
.062 [1.57] Commercial Pin and Socket Connectors — page 9078

CERTI-CRIMP Hand Tool

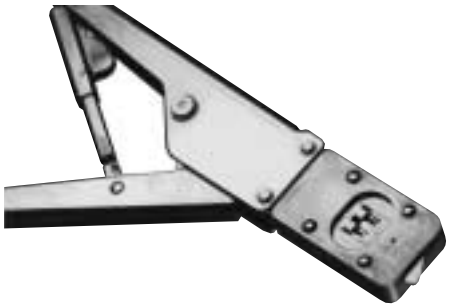

Catalog 65780

PRO-CRIMPER II Hand Tool



Catalog 82276

Features	CERTI-CRIMP Tool	PRO-CRIMPER II Tool
Field Repair/Prototyping	X	X
OEM Applications/Low Volume Production	X	—
Ratchet Control	X	X
Brush/Bellmouth Control	X	X
Precision Crimp Height Control	X	X
Little/No Operator Training Required	X	—
Insulation Adjustment	X	—
Repairable	X	—

Product Line	CERTI-CRIMP Tool Part Number	Instruction Sheet	PRO-CRIMPER II Tool Part Number	Instruction Sheet
Universal MATE-N-LOK II	58439-1	408-9591	—	—
	90300-2	408-9479	90548-1	408-9885
	90296-2	408-9476	90546-1	408-9883
	90298-2	408-9477	90547-1	408-9884
Universal MATE-N-LOK	90299-2	408-9478	90547-1	408-9884
	69710-1[1]	408-2095	—	—
	58380-1[2]	408-9433	—	—
	58380-2[2]	408-9433	—	—
Commercial MATE-N-LOK	90066-7	408-6610	—	—
	90123-2	408-7332	90574-1	408-9886
	90124-2	408-7332	90575-1	408-9887
.156 MATE-N-LOK	58631-1	408-4341	—	—
	58632-1	408-4340	—	—
.140 MATE-N-LOK	90247-1	408-7434	—	—
	69710-1[1]	408-2095	—	—
	58373-1[2]	408-9442	—	—
	58374-1[2]	408-9442	—	—
.093 Commercial Pin & Socket	—	—	90872-1	408-9967
			90871-1	408-9966
Mini-Universal MATE-N-LOK 2	90710-2	—	—	—
	90711-2	—	—	—
	90707-2	—	—	—
Mini-Universal MATE-N-LOK	90710-2	408-4148	90758-1	408-9938
	90711-2	408-4149	90759-1	408-9962
	90707-2	408-4137	90760-1	408-9963
Miniature Rectangular (MR)	90326-1	408-7749	58514-1	408-9973
	90325-1	408-7748	58514-1	408-9973
.062 Commercial Pin & Socket	—	—	90870-1	408-9965
			90869-1	408-9964

[1] Hand tool requires die set.
[2] Die set.

Note: This listing is for reference purposes only. To obtain part numbers for specific applications call the Technical Support Center (1-800-522-6752).

For complete product information, order Catalog 82181

Products for Industrial & Commercial Applications
Dimensions are shown for reference purposes only.
Dimensions are in inches and millimeters unless otherwise specified. Values in brackets are metric equivalents.
Specifications subject to change.
Technical Support Center 1-800-522-6752 www.tycoelectronics.com

Applicator Options

Universal MATE-N-LOK II Connectors or Contacts

Strip Form Contact Part Number		Heavy-Duty Miniature Applicator Part Numbers			
		Used on Bench Top Terminators		Used on Automatic Leadmaking Equipment (*AMPOMATOR* CLS Machine with T or G Terminators)	Used on *AMP-O-MATIC* Stripper-Crimper Machine
Pin	Socket	*AMP-O-LECTRIC* Model K Machine	*AMP-O-LECTRIC* Model G Machine		
770011-6	770012-6	—	567252-4	567252-1	—
770009-1	—	—	567214-4	567214-1	567914-1
770009-2	—				
—	770010-3				
—	770010-4				
770007-1	—	—	567213-4	567213-1	567913-1
770007-2	—				
—	770008-3				
—	770008-4				
770005-1	—	—	567212-4	567212-1	—
770005-2	—				
—	770006-3				
770005-4	770006-4				
770003-3	770004-3	—	567211-4	567211-1	—
770003-4	770004-4				
770193-1	—	—	567213-4	567213-1	567913-1
770193-2	—				
770194-1	—	—	567212-4	567212-1	—
770194-2	—				

Universal MATE-N-LOK Connectors or Contacts

350924-1	350925-1	466616-2	466616-3	—	—
350924-6	350925-6				
350561-1	350851-1	466320-2	466320-4	466320-1	466917-1
—	350570-1				
350561-2	350851-2				
—	350570-2				
350561-7	350851-7				
—	350570-7				
350561-3	350570-3				
—	350570-6				
350218-1	350536-1	687763-2	687763-6	687763-1	466920-1
350218-2	350536-2				
350218-7	350536-7				
350218-3	350536-3				
350218-6	350536-6				
350538-1	350537-1	687926-2	687926-6	687926-1	466989-1
350538-2	350537-2				
350538-7	350537-7				
350538-3	350537-3				
350538-6	350537-6				
350873-1	350874-1	466588-2	466588-3	466588-1	—
350873-3	350874-3				
350922-3	350923-3	466597-2	466597-3	466597-1	—
350922-6	350923-6				
350922-4	350923-4				
350699-1	—	466320-2	466320-4	466320-1	466917-1
350699-2	—				
350699-7	—				
350687-1	—	687763-2	687763-6	687763-1	466920-1
350687-2	—				
350687-7	—				
350700-1	—	687926-2	687926-6	687926-1	466989-1
350700-2	—				
350700-7	—				
770210-1	—	567216-2	567216-3	567216-1	466920-1
350654-1	—	687763-2	687763-6	687763-1	
770234-3	—	466597-2	466597-3	466597-1	

Note: Stripper Crimper (SCA) and Crimp Quality Monitor Applicators may be available. Call the Technical Support Center at 1-800-522-6752 for Part Numbers.

For complete product information, order Catalog 82181

Products for Industrial & Commercial Applications
Dimensions are shown for reference purposes only.
Dimensions are in inches and millimeters unless otherwise specified. Values in brackets are metric equivalents.
Specifications subject to change.
Technical Support Center 1-800-522-6752 www.tycoelectronics.com

Applicator Options

	Strip Form Contact Part Number		Heavy-Duty Miniature Applicator Part Numbers			
			Used on Bench Top Terminators		Used on Automatic Leadmaking Equipment (*AMPOMATOR* CLS Machine with T or G Terminators)	Used on *AMP-O-MATIC* Stripper-Crimper Machine
	Pin	Socket	*AMP-O-LECTRIC* Model K Machine	*AMP-O-LECTRIC* Model G Machine		
Commercial MATE-N-LOK Connectors or Contacts	350079-1	350078-1	466426-2	466426-3	466426-1	—
	350079-4	350078-4				
	350079-5	350078-5				
	61116-1	61314-1	466320-2	466320-4	466320-1	466917-1
	61116-4	61314-4				
	61116-5	61314-5				
	61116-6	61314-6				
	61116-7	61314-7				
	61118-1	61117-1	687763-2	687763-6	687763-1	466920-1
	61118-4	61117-4				
	61118-5	61117-5				
	61118-6	61117-6				
	61118-7	61117-7				
	350558-1	350557-1	687898-2	687898-4	687898-1	—
	350558-4	350557-4				
	61527-2	—	466320-2	466320-4	466320-1	466917-1
.156 MATE-N-LOK Contacts	61086-1	61085-1	466462-1	466462-3	466462-1	—
	61234-1	61233-1	687765-2	687765-2	—	—
.140 MATE-N-LOK Connectors or Contacts	61627-1	61626-1	567306-2	567306-3	567306-1	—
	61627-2	61626-2				
	350201-1	350200-1	567309-2	567309-3	587309-1	—
	350201-2	350200-2				
.093 Pin and Socket Connectors or Contacts	350418-1	350417-1	466656-2	466656-3	466656-1	466922-1
	—	350417-3				
	350418-5	350417-5				
	350416-1	350415-1	466878-2	466878-3	466878-1	466959-1
	350416-5	350415-5				
	—	350415-8				
	770530-1	770529-1	567337-4	567337-6	567337-3	—
	770385-1	770383-1	567273-2	567273-4	567273-3	—
	—	—				
Mini-Universal MATE-N-LOK 2 Connectors or Contacts	794216-1	794217-1	567418-2	567418-3	567418-1	—
	794216-3	794217-3				
	794218-1	794219-1	567066-4	567066-5	567066-3	466990-2
	794218-3	794219-3				
	794220-1	794221-1	567067-2	567067-3	567067-1	466986-1
	794220-3	794221-3				
	794222-1	794223-1	650582-2	650582-2	—	567902-1
	794222-3	794223-3				
Mini-Universal MATE-N-LOK Connectors or Contacts	770835-1	770834-1	567418-2	567418-3	567418-1	—
	770835-3	770834-3				
	770901-1	770902-1	567066-4	567066-5	567066-3	466990-2
	770901-3	770902-3				
	770903-1	770904-1	567067-2	567067-3	567067-1	466986-1
	770903-3	770904-3				
	171636-1	171637-1	680582	567251-1	680582	567902-1
	—	171637-3				
(MR) Miniature Rectangular Connectors or Contacts	350968-1	794000-1	466352-2	466352-3	466352-1	—
	350968-2	794000-2				
	350967-1	641294-1	466351-2	466351-4	466351-1	466913-1
	350967-2	641294-2				
	350969-1	—	466351-2	466351-4	466351-1	466913-1
	350969-2	—				
.062 Pin and Socket Connectors or Contacts	640391-1	640392-1	466686-2	466686-3	466686-1	466955-1
	640391-5	640392-5				
	—	640392-2				
	—	794046-1				
	350629-1	350628-1	687996-2	687996-3	687996-1	—
	—	350628-2				
	350629-5	350628-5				
	—	350628-6				
	—	794103-1				

For complete product information, order Catalog 82181

Note: Stripper Crimper (SCA) and Crimp Quality Monitor Applicators may be available. Call the Technical Support Center at 1-800-522-6752 for Part Numbers.

Feature Comparisons

	Standard Density				High Density			
	UMNL II	**UMNL**	**CMNL**	**.093**	**.062**	**Mini-UMNL 2**	**Mini-UMNL**	**MR**
Wire AWG —								
Maximum	10	10	14	14	18	16	16	18
Minimum	30	30	30	24	30	30	30	26
Current Rating —								
14 AWG Wire	15	15	15	15	—	—	—	—
18 AWG Wire	—	—	—	—	9	10.5	9	6
Max. Operating Voltage (AC or DC)	600	600	250	250	250	600	600	250
Flammability Rating —								
UL 94V-0	Yes	Yes	Yes	No	No	Yes	Yes	Yes
UL 94V-2	No	Yes	Yes	Yes	Yes	Yes	Yes*	No
Approvals —								
UL	Yes	Yes	Yes	Yes	Yes	Submitted	Yes	Yes
CSA	Yes	Yes	Yes	Yes	Yes	Submitted	Yes	Yes
VDE	Yes	Yes	No	No	No	Submitted	Yes	No
Contact Material —								
Brass	Yes	Yes	Yes	Yes	Yes	Yes	Yes	No
Phos. Bronze	Yes	Yes	Yes	Yes	Yes	No	No	Yes
Plating Finish —								
Tin Plating	Yes	Yes	Yes	Yes	Yes	Yes	Yes	Yes
Gold Plating	Yes	Yes	Yes	Yes	Yes	Yes	Yes	Yes
Centerline Spacing —	.250	.250	.200; .240 x .202; .195 x .360	.198; .250; .248	.145	.163	.163	.165
Housings —								
Panel Mount	Yes	Yes	Yes	Yes	Yes	No	Yes	Yes
Free Hanging	Yes	Yes	Yes	Yes	Yes	Yes	Yes	Yes
Secondary Locking Latches	Yes	No	No	No	No	Yes	No	No
Terminal Position	Yes	No	No	No	No	Yes	No	No
In-Line Config.	Yes	Yes	Yes	Yes	Yes	Yes	Yes	Yes
Dual Row Config.	No	No	Yes	No	No	Yes	Yes	No
Matrix Config.	Yes	Yes	Yes	Yes	Yes	Yes	Yes	Yes
Accessories —								
Strain Relief	UMNL	Yes	No	No	No	No	No	Yes
Keying Plug	Yes	Yes	Yes	No	No	Yes	Yes	Yes
Seals	No	Yes	No	No	No	No	No	No
Headers —								
Vertical	UMNL	Yes	Yes	No	No	MUMNL	Yes	Yes
Blindmate	No	No	No	No	No	MUMNL	Yes	No
Right-Angle	UMNL	Yes	Yes	No	No	MUMNL	Yes	No
Positions —								
Minimum	2	1	1	1	1	2	1	2
Maximum	15	15	16	15	9	24	24	36

*Wire-to-Wire Only.

For complete product information, order Catalog 82181

Products for Industrial & Commercial Applications
Dimensions are shown for reference purposes only.
Dimensions are in inches and millimeters unless otherwise specified. Values in brackets are metric equivalents.
Specifications subject to change.
Technical Support Center
1-800-522-6752
www.tycoelectronics.com

Product Facts

- **Wire-to-Board and Wire to Wire Connector System**
- **Free Hanging or Panel Mount Plug Housings**
- **Vertical header with or without mounting pegs and with or without drain holes**
- **Selective loading available on vertical headers**
- **4.2mm x 4.2mm centerline**
- **Male and female contacts designed for 26-22 AWG and 22-18 AWG wire**
- **AMP receptacle housings accept AMP female contacts with less orientation than competitive product**
- **Right Angle Headers**
- **Designed for power applications**
- **Positive latch feature helps prevent disconnection**
- **Dual action (DUAC) receptacle contacts**
- **Anti-stubbing contact design**
- **Polarized housings**
- **Six-position plug, receptacle, and strain relief meet NAMA standard for International Multi-Drop Bus Interface**
- **Intermateable with Molex Mini-Fit, Jr.**

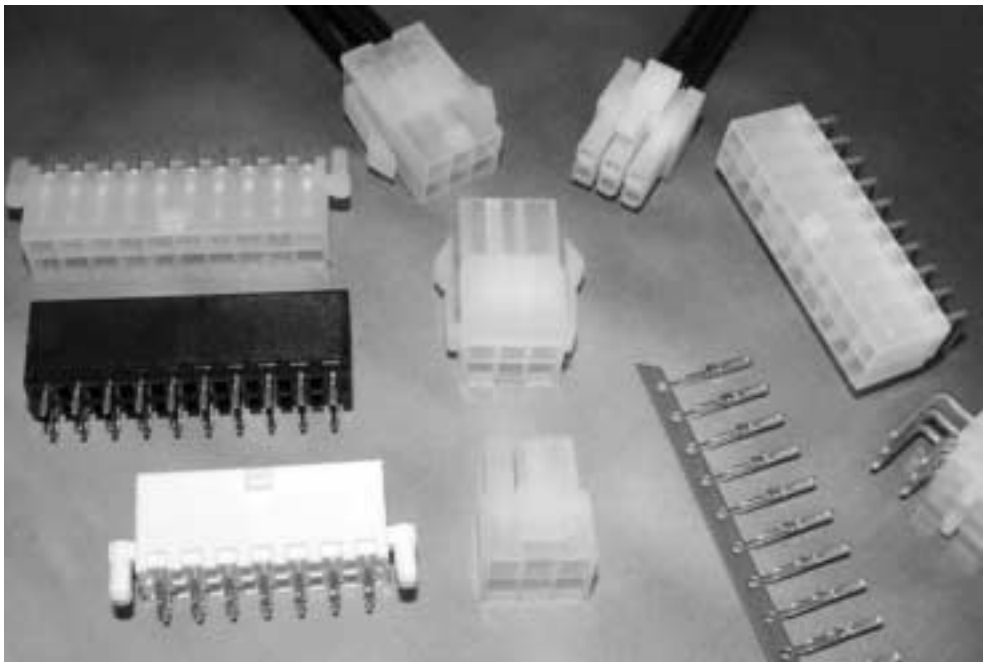

The dual action (DUAC) design of the receptacle contact guarantees low insertion force while maintaining high current capacity performance.

Technical Documents:

Product Specification
Headers — 108-1699
Receptacles — 108-19099

Application Specification
114-6067 for crimping contacts,
114-19048 — Use of Receptacles

Qualification Test Report
501-434
UL File E28476
CSA File LR7189

Performance Data:

Voltage Rating — 600 vac

Current Rating — 9 amps maximum in 2 position applications

Low Level Resistance — 10 megohms max

Dielectric Withstanding Voltage — 1,500 vac/min.

Insulation Resistance — 1,000 megohms minimum

Operating Temperature — –55° to 105°C

Receptacle Housings

2-24 Positions

Material:

Housings— Nylon, UL94V-2, Natural color, Nylon, UL94V-0, White color

Technical Documents : page 9086

Mates with vertical headers, right-angle headers and plug housings.

Accepts female contacts.

Related Product Data:

Strain Reliefs—Pages 9066 and 9088

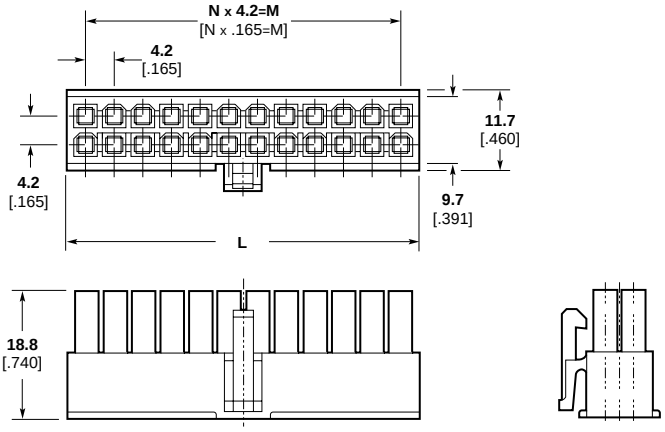

Number of Positions	Dimensions			Part Numbers	
	L	M	N	94V-2	94V-0
2	**5.5** .216	—	1	106527-2	794657-2
4	**9.7** .381	**4.2** .165	**1**	106527-4	794657-4
6	**13.9** .547	**8.4** .330	**2**	106527-6	794657-6
8	**18.1** .712	**12.6** .496	**3**	106527-8	794657-8
10	**22.3** .877	**16.8** .661	**4**	1-106527-0	1-794657-0
12	**26.5** 1.043	**21.0** .826	**5**	1-106527-2	1-794657-2
14	**30.7** 1.208	**25.2** .992	**6**	1-106527-4	1-794657-4
16	**34.9** 1.374	**29.4** 1.157	**7**	1-106527-6	1-794657-6
18	**39.1** 1.539	**33.6** 1.322	**8**	1-106527-8	1-794657-8
20	**43.3** 1.704	**37.8** 1.488	**9**	2-106527-0	2-794657-0
22	**47.5** 1.870	**42.0** 1.653	**10**	2-106527-2	2-794657-2
24	**51.7** 2.035	**46.2** 1.818	**11**	2-106527-4	2-794657-4

Contacts, Female

Technical Documents:

Product Specification
108-1699 AMP-DUAC Header
108-19099 AMP-DUAC Receptacle

Application Specification
114-19048 AMP-DUAC Receptacle contact
114-6067 for crimping contacts

Used in receptacle housings.

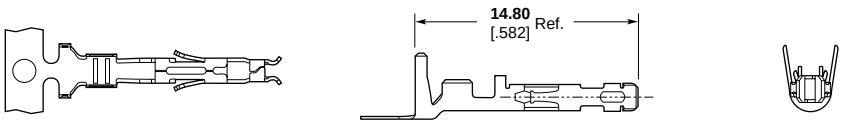

Female Contact

Wire Size Range AWG [mm²]	Ins. Dia. Range	Plating	Part Numbers	
			Strip	Loose Piece
22-18 [.3-.8]	**1.5-2.4** .059-.094	Tin	106529-2	1-106529-2
26-22 [.12-.3]	**1.3-1.75** .047-.069	Tin	106528-2	1-106528-2
2@18 [.8]	**3.3** Total Max. .130	Tin	794418-1	—
22-18 [.3-.8]	**1.5-2.4** .059-.094	Gold	794138-3	794141-3
26-22 [.12-.3]	**1.3-1.75** .047-.069	Gold	794139-3	794142-3
2@18 [.8]	**3.3** Total Max. .130	Gold	794140-3	—

For complete product information, order Catalog 1307012

Plug Housings

2-24 Positions

Material:

Housing — Nylon UL94V-2, Natural color
Nylon, UL94V-0, White color

Mates with receptacle housings on page 9087.
Accepts pin contacts.

Technical Documents : page 9086

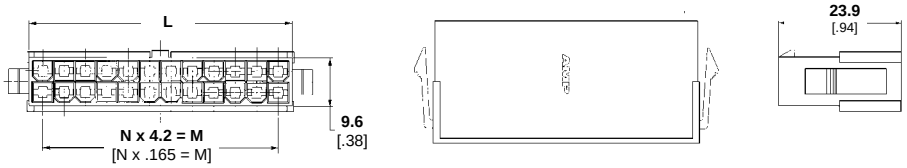

Number of Positions	Dimensions			94V-2		94V-0	
	L	M	N	Free Hanging	Panel Mount	Free Hanging	Panel Mount
2	**5.4** .213	—	1	794542-2	794550-2	794594-2	794598-2
4	**9.6** .378	**4.2** .165	1	794542-4	794550-4	794594-4	794598-4
6	**13.8** .543	**8.4** .330	2	794542-6	794550-6	794594-6	794598-6
8	**18** .709	**12.6** .496	3	794542-8	794550-8	794594-8	794598-8
10	**22.2** .874	**16.8** .661	4	1-794542-0	1-794550-0	1-794594-0	1-794598-0
12	**26.4** 1.039	**21.0** .826	5	1-794542-2	1-794550-2	1-794594-2	1-794598-2
14	**30.6** .205	**25.2** .992	6	1-794542-4	1-794550-4	1-794594-4	1-794598-4
16	**34.8** 1.370	**29.4** 1.157	7	1-794542-6	1-794550-6	1-794594-6	1-794598-6
18	**39** 1.535	**33.6** 1.322	8	1-794542-8	1-794550-8	1794594-8	1-794598-8
20	**43.2** 1.701	**37.8** 1.488	9	2-794542-0	2-794550-0	2-794594-0	2-794598-0
22	**47.4** 1.866	**42.0** 1.653	10	2-794542-2	2-794550-2	2-794594-2	2-794598-2
24	**51.6** 2.032	**46.2** 1.818	11	2-794542-4	2-794550-4	2-794594-4	2-794598-4

Contacts, Male

Used in Plug Housings

Contacts to be used with AMP housings only.



Male Contact

Wire Size Range AWG [mm²]	Ins. Dia. Range	Plating	Part Numbers	
			Strip	Loose Piece
22-18 .3-.8	**1.5-2.4** .059-.094	Tin	794576-1	794577-1
26-22 .12-.3	**1.3-1.75** .047-.069	Tin	794578-1	794579-1

Strain Reliefs

Used with plug or receptacle housings.

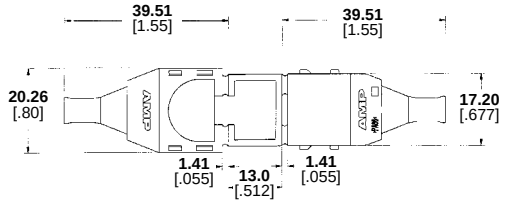

Pos. Size	Description	Comments	Part Number
6	Strain Relief	Wire Bundle 4.19 - 5.59, color - white	1375618-1

For complete product information, order Catalog 1307012

Products for Industrial & Commercial Applications

Dimensions are shown for reference purposes only.

Dimensions are in inches and millimeters unless otherwise specified. Values in brackets are metric equivalents.

Specifications subject to change.

Technical Support Center
1-800-522-6752
www.tycoelectronics.com

Vertical Header Assemblies

2, 4 & 6 Position, with and without Pegs and with and without Drain Holes

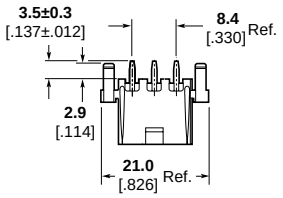

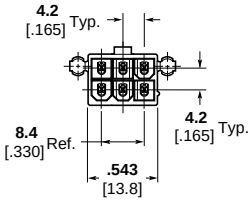

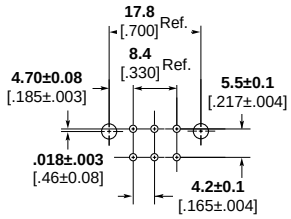

Recommended PC Board Layout

Material and Finish:

Housing — Nylon
UL94V-2, Natural color
UL94V-0, White color
Contacts — 0.25 thick copper alloy

Technical Documents : page 9086

Number of Circuits	PCB Pegs	Drain Holes	Plating	Part Numbers	
				UL94V-2	UL94V-0
2	N	N	Tin/Lead	794664-2	794668-2
2	N	N	30 Gold	794665-2	794669-2
2	Y	N	Tin/Lead	794662-2	794666-2
2	Y	N	30 Gold	794663-2	794667-2
2	N	Y	Tin/Lead	794349-1	794543-1
2	N	Y	30 Gold	794349-2	794543-2
2	Y	Y	Tin/Lead	794302-1	794540-1
2	Y	Y	30 Gold	794302-2	794540-2
4	Y	N	Tin/Lead	794662-4	794666-4
4	Y	N	30 Gold	794663-4	794667-4
4	N	N	Tin/Lead	794664-4	794668-4
4	N	N	30 Gold	794665-4	794669-4
4	Y	Y	Tin/Lead	794303-1	794466-1
4	Y	Y	30 Gold	794303-2	794466-2
4	N	Y	Tin/Lead	794350-1	794484-1
4	N	Y	30 Gold	794350-2	794484-2
6	Y	Y	Tin/Lead	794304-1	794467-1
6	Y	Y	30 Gold	794304-2	794467-2
6	N	Y	Tin/Lead	794351-1	794485-1
6	N	Y	30 Gold	794351-2	794485-2
6	Y	N	Tin/Lead	794662-6	794666-6
6	Y	N	30 Gold	794663-6	794667-6
6	N	N	Tin/Lead	794664-6	794668-6
6	N	N	30 Gold	794665-6	794669-6

8 & 10 Position, with and without Pegs and with and without Drain Holes

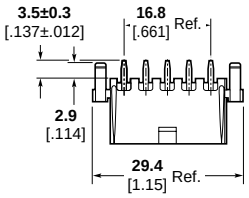

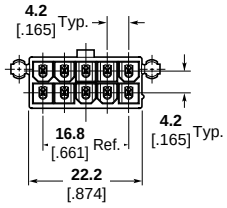

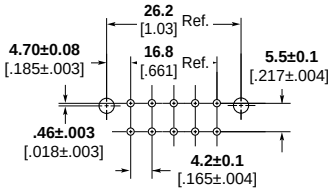

Recommended PC Board Layout

Material and Finish:

Housing — Nylon
UL94V-2, Natural color
UL94V-0, White color
Contacts — 0.25 thick copper alloy

Technical Document: page 9086

Number of Circuits	PCB Pegs	Drain Holes	Plating	Part Numbers	
				UL94V-2	UL94V-0
8	Y	N	Tin/Lead	794662-8	794666-8
8	Y	N	30 Gold	794663-8	794667-8
8	N	N	Tin/Lead	794664-8	794668-8
8	N	N	30 Gold	794665-8	794669-8
8	Y	Y	Tin/Lead	794305-1	794468-1
8	Y	Y	30 Gold	794305-2	794468-2
8	N	Y	Tin/Lead	794352-1	794486-1
8	N	Y	30 Gold	794352-2	794486-2
10	Y	N	Tin/Lead	1-794662-0	1-794666-0
10	Y	N	30 Gold	1-794663-0	1-794667-0
10	N	N	Tin/Lead	1-794664-0	1-794668-0
10	N	N	30 Gold	1-794665-0	1-794669-0
10	Y	Y	Tin/Lead	794306-1	794469-1
10	Y	Y	30 Gold	794306-2	794469-2
10	N	Y	Tin/Lead	794353-1	794487-1
10	N	Y	30 Gold	794353-2	794487-2

For complete product information, order Catalog 1307012

Products for Industrial & Commercial Applications

Dimensions are shown for reference purposes only.

Dimensions are in inches and millimeters unless otherwise specified. Values in brackets are metric equivalents.

Specifications subject to change.

Technical Support Center
1-800-522-6752
www.tycoelectronics.com

Vertical Header Assemblies

12 Position, with and without Pegs and with and without Drain Holes

Material and Finish:

Housing — Nylon
UL94V-2, Natural color
UL94V-0, White color
Contacts — 0.25 thick copper alloy

Technical Documents : page 9086

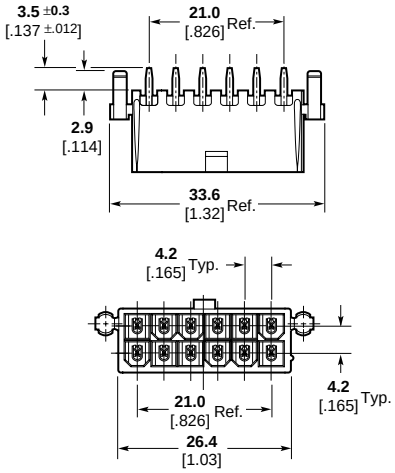

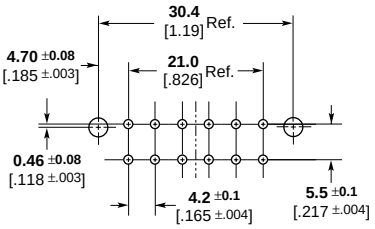

Recommended PC Board Layout

Number of Circuits	PCB Pegs	Drain Holes	Plating	Part Numbers	
				UL94V-2	UL94V-0
12	Y	N	Tin/Lead	1-794662-2	1-794666-2
12	Y	N	30 Gold	1-794663-2	1-794667-2
12	N	N	Tin/Lead	1-794664-2	1-794668-2
12	N	N	30 Gold	1-794665-2	1-794669-2
12	Y	Y	Tin/Lead	794307-1	794470-1
12	Y	Y	30 Gold	794307-2	794470-2
12	N	Y	Tin/Lead	794354-1	794488-1
12	N	Y	30 Gold	794354-2	794488-2

14 Position, with and without Pegs and with and without Drain Holes

Material and Finish:

Housing — Nylon
UL94V-2, Natural color
UL94V-0, White color
Contacts — 0.25 thick copper alloy

Technical Documents : page 9086

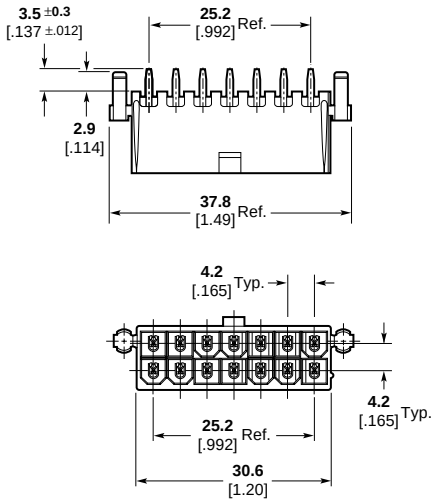

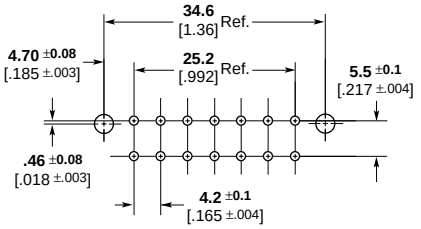

Recommended PC Board Layout

Number of Circuits	PCB Pegs	Drain Holes	Plating	Part Numbers	
				UL94V-2	UL94V-0
14	Y	N	Tin/Lead	1-794662-4	1-794666-4
14	Y	N	30 Gold	1-794663-4	1-794667-4
14	N	N	Tin/Lead	1-794664-4	1-794668-4
14	N	N	30 Gold	1-794665-4	1-794669-4
14	Y	Y	Tin/Lead	794308-1	794453-1
14	Y	Y	30 Gold	794308-2	794453-2
14	N	Y	Tin/Lead	794355-1	794489-1
14	N	Y	30 Gold	794355-2	794489-2

For complete product information, order Catalog 1307012

Products for Industrial & Commercial Applications

Dimensions are shown for reference purposes only.

Dimensions are in inches and millimeters unless otherwise specified. Values in brackets are metric equivalents.

Specifications subject to change.

Technical Support Center
1-800-522-6752
www.tycoelectronics.com

Vertical Header Assemblies

16 Position, with and without Pegs and with and without Drain Holes

Material and Finish:

Housing — Nylon
UL94V-2, Natural color
UL94V-0, White color

Contacts — 0.25 thick copper alloy

Technical Documents : page 9086

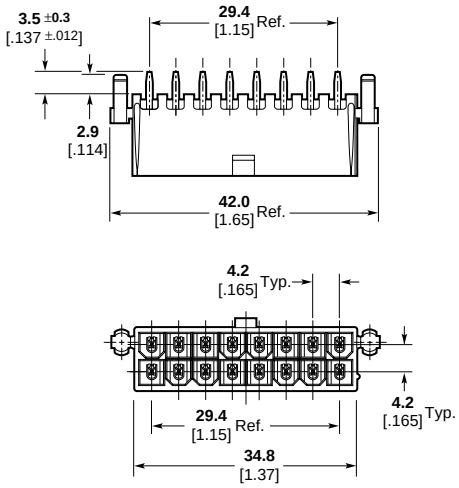

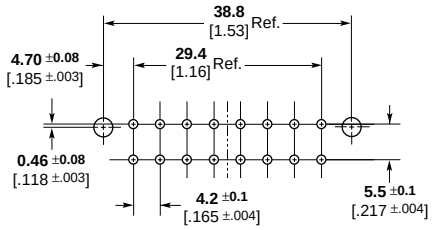

Recommended PC Board Layout

Number of Circuits	PCB Pegs	Drain Holes	Plating	Part Numbers	
				UL94V-2	UL94V-0
16	Y	N	Tin/Lead	1-794662-6	1-794666-6
16	Y	N	30 Gold	1-794663-6	1-794667-6
16	N	N	Tin/Lead	1-794664-6	1-794668-6
16	N	N	30 Gold	1-794665-6	1-794669-6
16	Y	Y	Tin/Lead	794309-1	794429-1
16	Y	Y	30 Gold	794309-2	794429-2
16	N	Y	Tin/Lead	794356-1	794490-1
16	N	Y	30 Gold	794356-2	794490-2

18 Position, with and without Pegs and with and without Drain Holes

Material and Finish:

Housing — Nylon
UL94V-2, Natural color
UL94V-0, White color

Contacts — 0.25 thick copper alloy

Technical Documents : page 9086

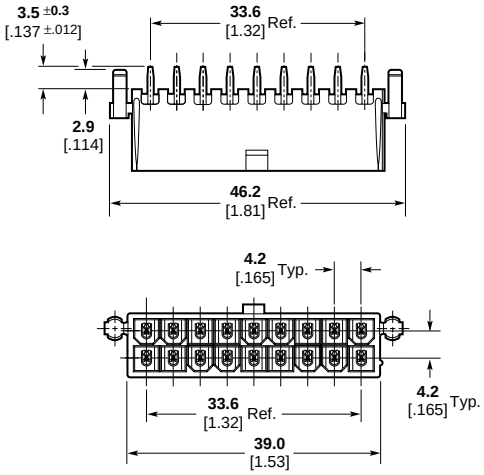

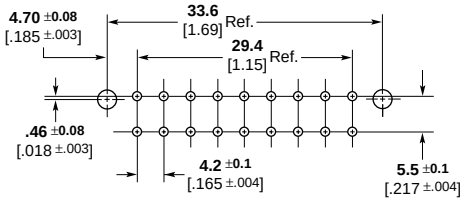

Recommended PC Board Layout

Number of Circuits	PCB Pegs	Drain Holes	Plating	Part Numbers	
				UL94V-2	UL94V-0
18	Y	N	Tin/Lead	1-794662-8	1-794666-8
18	Y	N	30 Gold	1-794663-8	1-794667-8
18	N	N	Tin/Lead	1-794664-8	1-794668-8
18	N	N	30 Gold	1-794665-8	1-794669-8
18	Y	Y	Tin/Lead	794310-1	794454-1
18	Y	Y	30 Gold	794310-2	794454-2
18	N	Y	Tin/Lead	794357-1	794491-1
18	N	Y	30 Gold	794357-2	794491-2

For complete product information, order Catalog 1307012

Vertical Header Assemblies

20 Position, with and without Pegs and with and without Drain Holes

Material and Finish:

Housing — Nylon
UL94V-2, Natural color
UL94V-0, White color
Contacts — 0.25 thick copper alloy

Technical Documents: page 9086

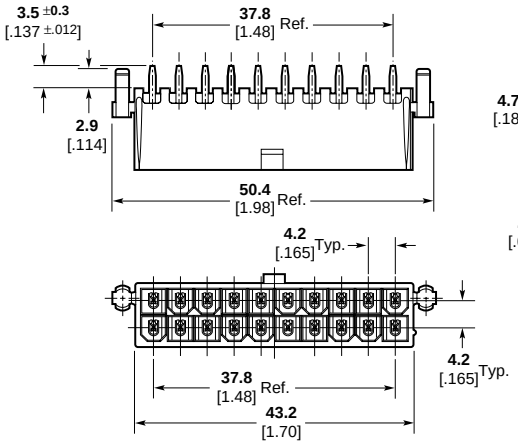

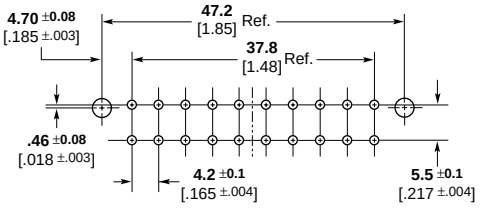

Recommended PC Board Layout

Number of Circuits	PCB Pegs	Drain Holes	Plating	Part Numbers	
				UL94V-2	UL94V-0
20	Y	N	Tin/Lead	2-794662-0	2-794666-0
20	Y	N	30 Gold	2-794663-0	2-794667-0
20	N	N	Tin/Lead	2-794664-0	2-794668-0
20	N	N	30 Gold	2-794665-0	2-794669-0
20	Y	Y	Tin/Lead	794311-1	794455-1
20	Y	Y	30 Gold	794311-2	794455-2
20	N	Y	Tin/Lead	794358-1	794492-1
20	N	Y	30 Gold	794358-2	794492-2

High Temperature Headers — IR Reflow compatible. Black color.

Number of Circuits	Flammability Rating	PCB Pegs	Drain Holes	Plating	Part Numbers
20	UL94V-0	N	N	Tin/Lead	794415-1
				30 Gold	794415-2

22 Position, with and without Pegs and with and without Drain Holes

Material and Finish:

Housing — Nylon
UL94V-2, Natural color
UL94V-0, White color
Contacts — 0.25 thick copper alloy

Technical Documents: page 9086

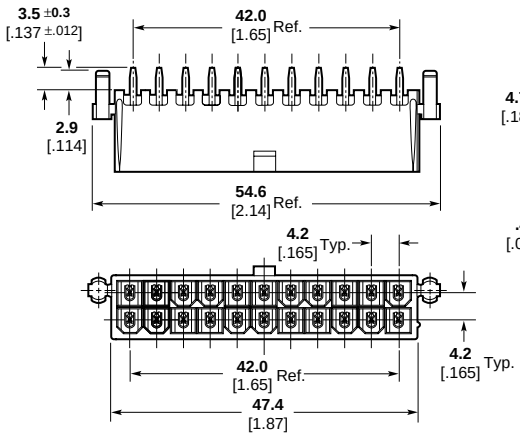

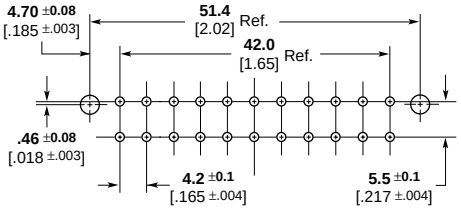

Recommended PC Board Layout

Number of Circuits	PCB Pegs	Drain Holes	Plating	Part Numbers	
				UL94V-2	UL94V-0
22	Y	N	Tin/Lead	2-794662-2	2-794666-2
22	Y	N	30 Gold	2-794663-2	2-794667-2
22	N	N	Tin/Lead	2-794664-2	2-794668-2
22	N	N	30 Gold	2-794665-2	2-794669-2
22	Y	Y	Tin/Lead	794312-1	794471-1
22	Y	Y	30 Gold	794312-2	794471-2
22	N	Y	Tin/Lead	794359-1	794493-1
22	N	Y	30 Gold	794359-2	794493-2

For complete product information, order Catalog 1307012

Products for Industrial & Commercial Applications

Dimensions are shown for reference purposes only.

Dimensions are in inches and millimeters unless otherwise specified. Values in brackets are metric equivalents.

Specifications subject to change.

Technical Support Center
1-800-522-6752
www.tycoelectronics.com

Vertical Header Assemblies

24 Position, with and without Pegs and with and without Drain Holes

Material and Finish:

Housing — Nylon
UL94V-2, Natural color
UL94V-0, White color

Contacts — 0.25 thick copper alloy

Technical Documents : page 9086

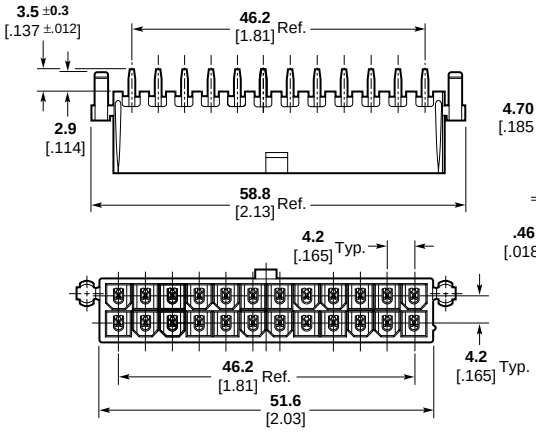

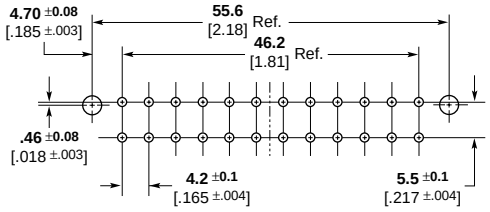

Recommended PC Board Layout

Number of Circuits	PCB Pegs	Drain Holes	Plating	Part Numbers	
				UL94V-2	UL94V-0
24	Y	N	Tin/Lead	2-794662-4	2-794666-4
24	Y	N	30 Gold	2-794663-4	2-794667-4
24	N	N	Tin/Lead	2-794664-4	2-794668-4
24	N	N	30 Gold	2-794665-4	2-794669-4
24	Y	Y	Tin/Lead	794313-1	794472-1
24	Y	Y	30 Gold	794313-2	794472-2
24	N	Y	Tin/Lead	794360-1	794494-1
24	N	Y	30 Gold	794360-2	794494-2

Right-Angle Headers

Right-Angle Headers with Pegs

Material and Finish:

Housing — Nylon
UL94V-2, Natural color
UL94V-0, White color

Mates with Receptacle Housings on page 9087.

Technical Documents : page 9086

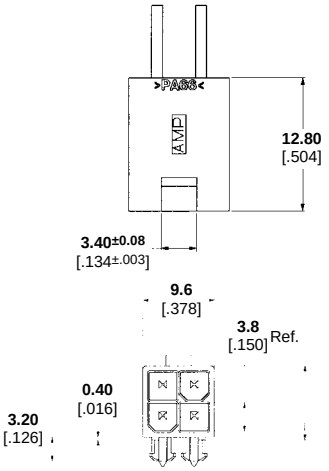

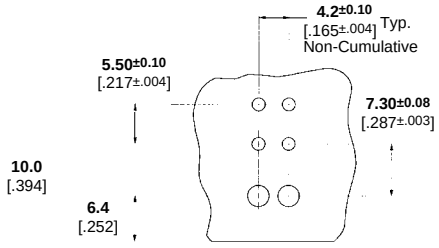

Recommended Mounting Hole Pattern for 1.78 Max. Thick PC Board Component Side Shown

Number of Circuits	Plating	Part Numbers	
		UL94V-2	UL94V-0
4	Tin/Lead	794508-1	794527-1
6	Tin/Lead	794448-1	794528-1
8	Tin/Lead	794509-1	794529-1
10	Tin/Lead	794510-1	794530-1
12	Tin/Lead	794511-1	794531-1
14	Tin/Lead	794512-1	794532-1
16	Tin/Lead	794513-1	794533-1
18	Tin/Lead	794514-1	794588-1
20	Tin/Lead	794449-1	794534-1
22	Tin/Lead	794515-1	794589-1
24	Tin/Lead	794516-1	794590-1

For complete product information, order Catalog 1307012

Introduction

As the world's leading manufacturer of electrical/electronic connecting devices, Tyco Electronics produces a wide assortment of connector contacts. Included in this catalog is an array of the most popular pin and socket type contacts for signal and power, for coaxial cable, and posted versions for backpanel wiring applications. Also included is information on available application tooling to meet your production requirement.

How to choose the correct connector/contact combination.

Choosing the appropriate connector/contact combination is essential to the proper function of any Tyco Electronics connector. A customer must first evaluate each individual application with regards to wire size(s), number of circuits, available space, and fastening method. The customer must then consider the following factors to make the appropriate selection of connector/ contact/ hardware:

a. Connector Type. This decision is based on the selected contact types, coupling method, circuit density requirements and, if posted connectors are desired, in-plant production capabilities of wiring connectors using hand tools or semiautomatic tooling.
b. Contact Type. This decision is based on wire size(s) and the reliability and cost requirements of an application, as well as the customer's in-plant production capabilities.
c. Hardware Selection. This decision is based on the connector type, and the application requirements for fastening, protection, shielding, guiding, strain relief and keying.

■ **Produced under a Quality Management System certified to ISO 9001**

A copy of the certificate is available upon request.



Current Carrying Capabilities

Current Carrying Capabilities

The total current capacity of each contact in a given connector is dependent upon the heat rise resulting from the combination of electrical loads of the contacts in the connector arrangement and the maximum ambient temperature in which the connector will be operating. Caution must be taken to ensure that this combination of conditions does not cause the internal temperature of the connector to exceed the maximum operating temperature of the housing material. Several variables which must be considered when determining this maximum current capability for your application are:

- **Wire Size**—Larger wire will carry more current since it has less internal resistance to current flow and generates less heat. The wire also conducts heat away from the connector.
- **Connector Size**—In general, with more circuits in a connector, less current per contact can be carried.
- **Current Load Distribution**—Spreading those lines with greater current loads throughout the connector, particularly around the outer perimeter, will enhance heat dissipation.
- **Ambient Temperature**—With higher ambient temperatures, less current can be carried.

Current Rating Verification

Can a contact rated at 10 amperes carry 10 amperes?

Maybe yes, but probably not. The reason lies in the test conditions used to rate the contact. If these conditions do not adequately reflect the application conditions, the actual allowable current levels may be lower than specified levels. For example, many manufacturers, including Tyco Electronics, test a single contact in air. This gives an accurate measure of the basic current-carrying capacity of the contact. Use the contact alone in air and it can certainly carry 10 amperes. Use it in a multi-position connector surrounded by other current-carrying contacts or in high ambient temperatures, and the contact should carry less current.

Similarly, as the contact ages and stress relaxation, environmental cycling, and other degradation factors take their toll, the contact's current-carrying capacity decreases. A prudent design must set current levels for such end-of-design-life (EODL) conditions.

CONTACT CURRENT GUIDE Maximum Current (Amperes)

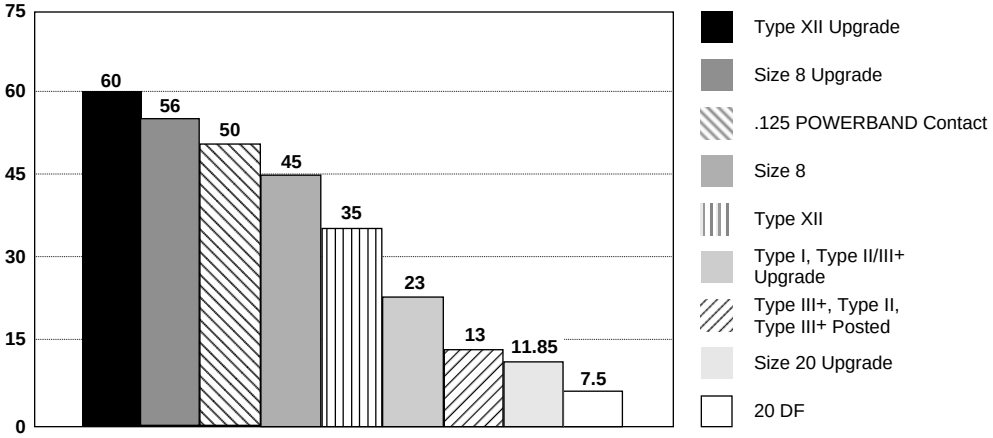

Practical current-carrying capacity is not an absolute, but an application-dependent condition.

New Method Simplifies Ratings

To help the designer set the appropriate current level, Tyco Electronics has developed a method of specifying current-carrying capacity. This method takes into account the various application factors that influence current rating.

The method can be summarized as follows:

- The contact is aged to EODL conditions by durability cycling, thermal cycling, and environmental exposure.
- The contact's resistance stability is verified.
- The current necessary to produce the specified temperature rise is measured. This T-rise is usually 30°C.
- A rating factor is determined to allow derating of multiple contacts in the same housing and for different conductor sizes.

Temperature

One other factor influencing current levels is the maximum operating temperature, for example, 105°C. If the application has a high ambient temperature (over 75°C) the contact's T-rise is limited by the maximum operating temperature. For example, an application temperature of 90°C limits the contact T-rise to 15°C. Since current produces heat (the I^2R law), the current must be lowered to limit the T-rise.

A contact's T-rise depends not only on its I^2R Joule heating, but also on its ability to dissipate the heat. Consider a contact in a multi-contact housing. Joule heating in multiple contacts will raise the local ambient temperature.

Since the contact will not be able to dissipate its own heat as well by convection, the maximum T-rise will be realized at a lower current level. Consequently, the allowable current level must be lower to maintain an acceptable T-rise.

For a given connector, the current level will be set by the loading density. A connector containing 50% current-carrying contacts will permit higher currents (per contact) than a connector will at 75% loading. The loading percentage assumes an even distribution of contacts within the housing. If all 10 contacts are grouped together in one section of a 20-position connector, the loading density may approach 100%.

The Importance of EODL

As stated, T-rise in a contact depends on both resistance and current. As it ages, a contact's resistance will increase. The contact designer will specify a maximum resistance for the contact, this level is the end-of-design-life resistance. Before the contact is tested for current, Tyco Electronics subjects it to a sequence of tests that exercises the major failure mechanisms and thereby simulates EODL conditions. Conditioning includes mating cycling, industrial mixed-flowing gases, humidity and temperature cycling, and vibration to sequentially introduce wear, corrosion, stress relaxation, and mechanical disturbance.

Presentation

The presentation of current-carrying capacity in AMP product specifications includes two parts:

- First, a base curve showing current levels versus T-rise for a single circuit and the largest wire size. This represents the maximum current capacity of the contact. The curve is usually flat up to 75°C ambient and then drops off. Up to 75°C, the 30°C T-rise limits the amount of current, and above 75°C the current must be reduced to keep the combination of ambient temperature and T-rise from exceeding the maximum operating temperature of 105°C.

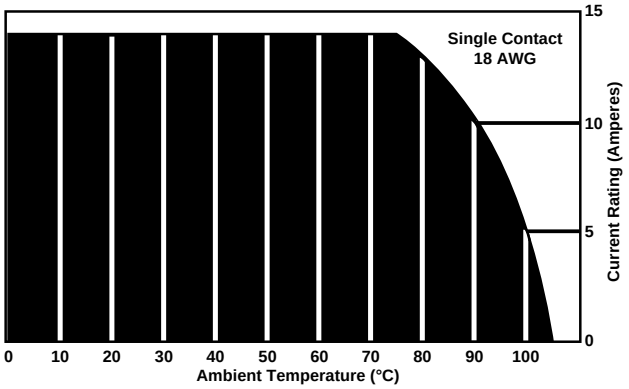

Figure 1
Graph shows the relationship between base current, ambient temperature, and contact T-rise.

For complete product information, order Catalog 65910

Products for Industrial & Commercial Applications
Dimensions are shown for reference purposes only.
Dimensions are in inches and millimeters unless otherwise specified. Values in brackets are metric equivalents.
Specifications subject to change.
Technical Support Center
1-800-522-6752
www.tycoelectronics.com

Current Carrying Capabilities

- Next are rating factors, a table of multipliers to account for connector loading and for smaller wire sizes. The designer first determines the base current for the ambient conditions of the application; then multiplies this base current by the rating factors to find the current level for the application's loading factor and wire size.

Practical Values

The current-rating method gives designers practical values applicable to their applications. While the specified current levels for a contact may be lower than for other testing methods, they are more realistic and simplify the system design process.

"Spec-manship" is replaced by a realistic assessment of the current-carrying capacity of a contact under varying conditions of temperature, connector loading, and wire size.

Connector/Contact Acceptability

As previously stated, choosing the correct connector/contact combination is fundamental to the successful function of all connectors. The Selection Chart shown below, is designed to simplify your choice of connectors and their acceptable contacts. Once you have selected the wire size, current-carrying capacity need, number of positions required, and the type of contacts needed in your choice of connector, refer to this matrix for a quick look at exactly what is acceptable in a given connector type.

An Example:

To demonstrate the method of specifying current, consider the following application conditions; an ambient temperature of 65°C, a 50% loading of contacts in the housing, and 20 AWG [0.6mm²] wire.

- From Figure 1, the base current rating is 14 ampere with 18 AWG [0.8mm²] wire.
- Figure 2, the rating factor for 50% loading and 20 AWG [0.6mm²] wire is 0.68.
- The specific rating for this application is the product of the base rating and the rating factor:
  14 x 0.68 = 9.5 ampere
- Each of the contacts can carry 9.5 ampere.
- However, if the ambient temperature is 80°C the allowable T-rise becomes 25°C. The base current must be lowered to 12.8 ampere so that the 105°C maximum operating temperature is not exceeded. The current rating then becomes:
  12.8 x 0.68 = 8.7 ampere.

Technical Documents

Technical Documents consist of *Product Specifications* and *Application Specifications. Product Specifications* define the performance characteristics of the product; i.e., Current Rating, Temperature Rating, etc. They are intended for the Design or Component Engineer. *Application Specifications* describe how the product is to be applied; i.e., Crimping, Assembling, etc. They are intended for Manufacturing and Operation/ Set Up Personnel. Where Application Specifications are not available, an Instruction Sheet is provided. Additional Instruction Sheets on the product may be available.

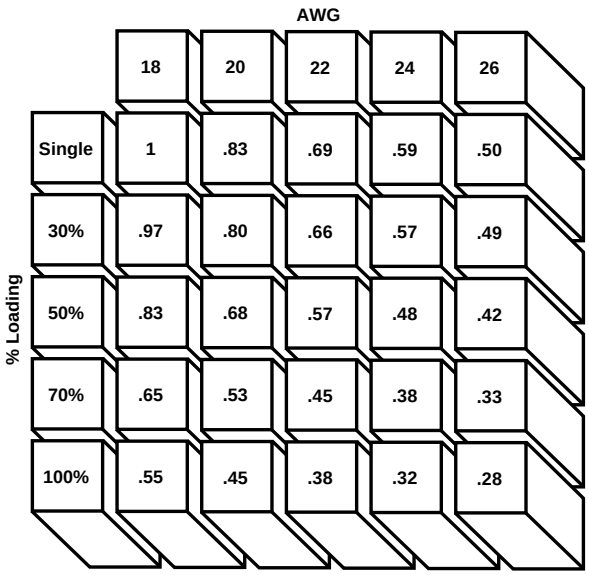

Figure 2

Rating factors allow the base current to be adjusted for various connector loading and wire sizes.

Technical Document Selection Chart

Contact Type	Product Specifications	Application Specifications	Instruction Sheet
20DF	108-40005	114-10000 114-40030	—
Type I	108-10108	114-10037	—
Type II	108-10039	114-10026	—
Type III+	108-10042	114-10004	—
Type XII	108-10037	114-10005	—
M Series Posted	108-10042	—	408-09155
.125 POWERBAND	—	114-10043	—
Size 8	108-01317	114-10014	—
Size 8 Upgrade	108-1449	—	—
Mini Coax	108-12021	—	408-1770
Sub-Mini Coax	108-12008 108-12011	—	408-2024-3

Contact Selection Chart

Connector Type	20 DF & Size 20 Upgrade	Type I	Type II	Type III+ & Type II/III+ Upgrade	Posted Type III+	Type XII & Type XII Upgrade	.125 POWERBAND	Size 8 & Size 8 Upgrade	Mini-Coax	Sub-Mini Coax
Metrimate			✔	✔	✔					
Metrimate Drawer			✔	✔	✔			✔		
Metrimate Drawer (.125 POWERBAND)							✔			
CPC Series 1			✔	✔	✔					✔
CPC Series 2	✔									
CPC Series 3						✔				
CPC Series 4			✔	✔		✔				✔
CPC Series 5							✔			
CPC Series 6			✔	✔			✔			
M Series			✔	✔	✔					✔
M Series Special		✔	✔	✔	✔	✔			✔	✔
"G" Series		✔	✔	✔		✔			✔	

For complete product information, order Catalog 65910

Products for Industrial & Commercial Applications
Dimensions are shown for reference purposes only.
Dimensions are in inches and millimeters unless otherwise specified. Values in brackets are metric equivalents.
Specifications subject to change.
Technical Support Center
1-800-522-6752
www.tycoelectronics.com

Signal Contacts

Type III+, Crimp, Snap-In, Size 16

Precision formed pin and socket contacts in Size 16. They are used in M Series, Special M Series, “G” Series, Metrimate, Metrimate Drawer, and CPC Series 1 and 4 connectors. Contacts feature a high normal force which provides a low resistance in significant applications such as dry circuit signal conditions. Mating entry is closed-ended to help prevent damage from stubbing due to misalignment. Stainless steel spring provides superior normal force and retention in the housing. Tyco Electronics proprietary gold plating process is designed so that specified plating thicknesses are controlled on the inside of the socket, which is the critical contact mating area. The contacts are formed from brass. Single contact rating is 13 amperes at 30°C Temperature Rise.

See page 9101 for product details.

Type III+, Solder Type, Size 16

As with the crimp snap-in Type III+, these precision formed solder-type contacts are also used in M Series, Special M Series, Metrimate, Metrimate Drawer, and CPC Series 1 and 4 connectors. Contacts feature a high normal force which provides a low resistance in significant applications, such as dry circuit conditions. A preformed wire barrel accepts both stranded and solid wire, while the preformed insulation barrel provides strain relief for various wire insulation thicknesses. Mating entry is closed-ended to help prevent damage from stubbing due to misalignment. A stainless steel spring provides superior normal force and retention in the housing. Tyco Electronics proprietary gold plating process is designed so that specified plating thicknesses are controlled on the inside of the socket, which is the critical contact area. Single contact current rating is 13 amperes at 30°C Temperature Rise.

See page 9102 for product details.

Type III+, Solder Tab, Size 16

A companion contact style to the crimp snap-in and solder-type, the Type III+ Solder Tab is compatible with the same Tyco Electronics connector families, and features high normal forces to provide a low resistance in significant applications. A pre-crimped solder tab with slot accepts various sizes of solid and stranded wire. Mating entry is closed-ended to prevent stubbing due to misalignment. A stainless steel spring provides superior normal force and retention in the housing. Tyco Electronics proprietary gold plating process is designed so that specified plating thicknesses are controlled on the inside of the socket, which is the critical contact area. Single contact current rating is 13 amperes at 30°C Temperature Rise.

See page 9102 for product details.

Signal Contacts

Type III+, Posted Version, Size 16

The last member of the Type III+ family of contacts, the posted version is compatible with M Series, Special M Series, Metrimate, Metrimate Drawer, and CPC Series 1 connectors. Precision formed, they are pre-crimped to various post configurations including those that accept TERMI-POINT Clip or wire-wrap type terminations. Contacts feature high normal force which provides a low resistance in significant applications. Mating entry is closed-ended to help prevent damage from stubbing due to misalignment. A stainless steel spring provides superior normal force and retention in the housing. Tyco Electronics proprietary gold plating process is designed so that specified plating thicknesses are controlled on the inside of the socket, which is the critical contact mating area. Contacts are formed from brass. Single contact current rating is 13 amperes at 30°C Temperature Rise.

See page 9104 for product details.

Type II, Crimp, Snap-In, Size 16

Precision screw-machined pin and socket contacts, they are used in M Series, Special M Series, “G” Series, Metrimate, Metrimate Drawer, and CPC Series 1 and 4 connectors. Contacts feature high normal force which provides a low resistance in significant applications such as dry circuit signal conditions. Mating entry is closed-ended to help prevent damage from stubbing due to misalignment. A stainless steel spring provides superior normal force and retention in the housing. The contact bodies are machined from solid brass. Single contact current rating is 13 amperes at 30°C Temperature Rise.

See page 9105 for product details.

Size 20 DF, Crimp, Snap-In

Precision formed lance-less pin and socket, crimp, snap-in contacts in Size 20. These contacts are used in CPC Series 2 and AMPLIMITE Subminiature D connectors (see catalog 82068 for AMPLIMITE connectors). Contacts feature a low mating force to facilitate high pin counts in the connector housings. Tulip entry design on socket and generous lead-in on pin prevents contact stubbing. Pin contacts are formed from brass, whereas socket contacts are formed from phosphor bronze providing excellent spring properties. Contacts are available with or without insulation support. Single contact current rating is 7.5 amperes at 30°C Temperature Rise.

See pages 9106 thru 9107 for product details.

Size 20 DF, Solder Cup, Snap-In

Precision formed lance-less pin and socket, solder contacts in Size 20. These contacts are used in CPC Series 2 and AMPLIMITE Subminiature D Connectors (see catalog 82068 for AMPLIMITE connectors). Contacts feature a low mating force to facilitate high pin counts in the connector housings. Tulip entry design on socket and generous lead-in on pin prevents contact stubbing. Pin contacts are formed from brass, whereas sockets are formed from phosphor bronze providing excellent spring properties. Contacts may be soldered to solid or stranded wire up to 18 AWG [0.8 mm^2] maximum. Single contact current rating is 7.5 amperes at 30°C Temperature Rise.

See page 9107 for product details.

For complete product information, order Catalog 65910

Products for Industrial & Commercial Applications
Dimensions are shown for reference purposes only.
Dimensions are in inches and millimeters unless otherwise specified. Values in brackets are metric equivalents.
Specifications subject to change.
Technical Support Center
1-800-522-6752
www.tycoelectronics.com

Power Contacts

Type I, Crimp, Snap-In, Size 12

Precision screw-machined pin and socket, Size 12 contacts, they are used in Special M Series and "G" Series connectors, and are inserted into the same cavities as Miniature Coaxial contacts. These contacts feature a high normal force which provides a low resistance in significant applications. Mating entry is closed-ended to help prevent damage from stubbing due to misalignment. Beryllium copper springs are used to provide contact normal force and are assisted by a stainless steel hood which provides anti-overstress assurance. Single contact current rating is 23 amperes at 30°C Temperature Rise.

See page 9108 for product details.

.125 POWERBAND, Crimp, Snap-In

Specifically designed for AMP CPC Connectors (Series 5 and 6) and Metrimate .125 POWERBAND Drawer Connectors, the new .125 POWERBAND contact offers the performance of a MIL-Spec screw machine contact with the economy of a stamped and formed, strip-feed contact. Contacts are formed from copper with beryllium copper springs. Single contact current rating is 50 amperes at 30°C Temperature Rise.

See page 9111 for product details.

Size 8, 4/8 Indent Crimp

Precision screw-machined pin and socket, Size 8 contacts, they are used in Metrimate Drawer Connectors, and other Tyco Electronics product lines, which require high current carrying capability in a small size. Pins are made from a solid high conductivity copper alloy, and the sockets are machined from solid beryllium copper, a material which exhibits excellent spring properties. Industry standard 4/8 indent crimp offers higher reliability and ease of termination. Single contact current rating is 45 amperes at 30°C Temperature Rise.

See page 9112 for product details.

Type XII, Crimp-Type

Precision formed male and female contacts used in CPC Series 3 and 4, Special M Series and "G" Series connectors, these contacts offer a low cost power option which provides additional applied cost savings when terminated with semiautomatic application equipment. The contact body is made from 100% copper, which provides for excellent conductivity. Spring characteristics are derived from a captive stainless steel spring which assists the dual cantilever spring members of the female contact. Single contact current rating is 35 amperes at 30°C Temperature Rise.

See page 9114 for product details.

High Current Upgrades

Precision screw-machined pin and socket contacts have increased current capability. All upgraded contacts use the high amperage Louvertac contact band. The design of this contact allows for increased current in the same form factor. For example, Type II/Type III+ upgraded contacts increase the current from 13 amperes free air to 23 amperes free air at 30°C Temperature Rise.

See pages 9109, 9110, 9113 and 9115 for further details.

For complete product information, order Catalog 65910

Coaxial Contacts

Subminiature, Crimp, Snap-In, Size 16

Precision screw-machined pin and socket, Size 16 contacts, they are used in M Series, Special M Series, and CPC Series 1 and 4. They provide cost effective solutions in applications where mixtures of signal, power, and coaxial cable terminations are desired. The contact outer shell is made from brass, while the center pin conductor is beryllium copper, and the socket is brass. Both the pin and socket center conductor are gold plated for maximum corrosion resistance and minimum contact resistance. The retention spring is stainless steel, while the ferrule is tin-lead plated copper. Contact design offers application of coaxial cable, shielded conductors, and twisted pair wire with a voltage rating of up to 200 VRMS, and a current rating of 1.0 ampere at 30°C Temperature Rise.

See pages 9116 and 9117 for product details.

Miniature, Crimp, Snap-In, Size 12

Precision screw-machined, Size 12 pin and socket contacts, they are used in Special M Series and “G” Series connectors. They provide cost effective solutions in applications where a mixture of signal, power, and coaxial cable terminations is desirable. Contact body and center wire conductor are made from brass, and are gold plated for maximum corrosion resistance and minimum contact resistance. The retention spring is beryllium copper, and the ferrule is tin-lead plated copper. Contact design offers application of coaxial cable, shielded conductors, and twisted pair wire with a voltage rating of up to 325 VRMS, and a current rating of 7.5 amperes at 30°C Temperature Rise.

See pages 9117 and 9118 for product details.

Type III+, Crimp, Snap-In

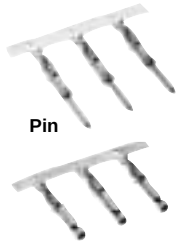

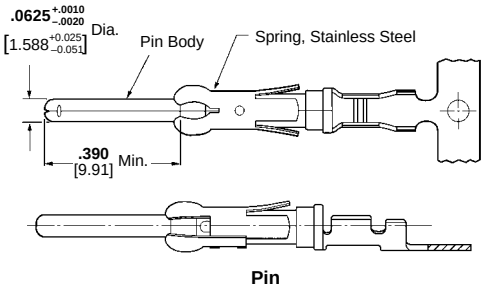

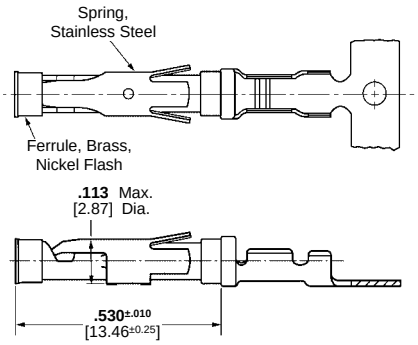

Material:

Contact Body—Brass or phosphor bronze

Retention Spring—Stainless steel

Finish:

See chart.

Related Product Data:

Application Tooling—Section 13

Technical Documents:

Product Specification
108-10042

Application Specification
114-10004

Contact Size 16—Pin Diameter .062 [1.57] (Test Current, 13 Ampere)‡

Wire Size Range AWG	Wire Size Range mm²	Ins. Dia. Range	Contact Finish	Strip Form Contact No. Pin	Strip Form Contact No. Socket	Loose Piece Contact No. Pin	Loose Piece Contact No. Socket	Tooling Part Numbers Loose Piece Hand Tool	Tooling Part Numbers Strip Form Applicators
30-28	0.05-0.09	**.015-.030** 0.38-0.76	Gold/Nickel[2]	788085-3	788088-2	—	—	90716-1	567867-1*** or 567947-1*** or 680602-□***
			Sel. Gold/Nickel[3]	788085-1	788088-1	788085-4	788088-3		
30-26	0.05-0.15	**.040-.060**[1] 1.02-1.52	Bright Tin-Lead	66425-6	66424-6	—	—	90066-7[6]	466598-□***
			Gold/Nickel[2]	66425-7	66424-7	66429-3	66428-3		
			Sel. Gold/Nickel[3]	66425-8	66424-8	66429-4	66428-4		
		.014-.030[1] 0.36-0.76	Gold/Nickel[2]	66393-7	66394-7	—	—	90225-2[6]	466585-3***
			Sel. Gold/Nickel[3]	66393-8	66394-8	66406-4	66405-4		
26-24	0.12-0.2	**.035-.055**[1] 0.89-1.40	Bright Tin-Lead	66106-6	66108-6	66107-2	66109-2	90066-7[6] or 58495-1*	466321-□*** or 466908-2***
			Gold/Nickel[2]	66106-7	66108-7	66107-3	66109-3		
			Sel. Gold/Nickel[3]	66106-8	66108-8	66107-4	66109-4		
			Sel. Gold/Nickel[4]	—	66108-1	—	66109-1		
24-20	0.2-0.6	**.040-.080**[1] 1.02-2.03	Bright Tin-Lead	66102-7	66104-7 2-66104-5	66103-2	66105-2 —	90066-7[6] or 58495-1*	466323-□*** or 466907-2***
			Gold/Nickel[2]	66102-8	66104-8	66103-3	66105-3		
			Sel. Gold/Nickel[3]	66102-9 2-66102-2	66104-9 2-66104-3	66103-4 1-66103-2	66105-4 1-66105-3		
			Sel. Gold/Nickel[4]	—	66104-1	—	66105-1		
		.060-.120[5] 1.52-3.05	Bright Tin-Lead	66564-6	66563-6	66566-2	66565-2	90331-1[6]	466383-4*** or 466979-1*** or 567363-□***
			Sel. Gold/Nickel[3]	66564-8	66563-8	66566-4	66565-4		
			Sel. Gold/Nickel[4]	66564-1	—	66566-1	—		
		.080-.100[1] 2.03-2.54	Bright Tin-Lead	66332-5	66331-5	66400-1	66399-1	90067-5[6] or 90225-2[6]	466324-□*** or 466942-1***
			Gold/Nickel[2]	66332-7	66331-7	66400-3	66399-3		
			Sel. Gold/Nickel[3]	66332-8	66331-8	66400-4	66399-4		
			Sel. Gold/Nickel[4]	—	66331-2	—	66399-2		
18-16	0.8-1.4	**.080-.100**[1] 2.03-2.54	Bright Tin-Lead	66098-2[S] 66098-7	66100-7	66099-2	66101-2	90067-4[6] or 90067-5[6] or 58495-1*	466325-□*** or 466906-1***
			Gold/Nickel[2]	66098-8	66100-8	66099-3	66101-3		
			Sel. Gold/Nickel[3]	66098-9	66100-9	66099-4	66101-4		
			Sel. Gold/Nickel[4]	66098-6	—	66099-1	—		
18-14	0.8-2.0	**.080-.100**[1] 2.03-2.54	Bright Tin-Lead	66359-6 1-66359-1	66358-6 1-66358-2 1-66358-4	66361-2 66361-7	66360-2 66360-7	90310-3[6]	466326-□*** or 466923-2***
			Gold/Nickel[2]	66359-9	66358-9	66361-3	66360-3		
			Sel. Gold/Nickel[3]	1-66359-0 1-66359-2	1-66358-0 1-66358-3	66361-4 66361-8	66360-4 66360-8		
			Sel. Gold/Nickel[4]	—	66358-1	—	66360-1		
		.110-.150[5] 2.79-3.81	Bright Tin-Lead	66597-1	66598-1 66598-7	66602-1	66601-1	90310-2[6]	466958-1*** or 567364-□***
			Sel. Gold/Nickel[3]	66597-2	66598-2	66602-2	66601-2		

[1] Overall insulation crimp diameter, including crimp barrel, must not exceed .125 [3.18].
[2] .000015 [0.00038] gold in the mating area over .000050 [0.00127] min. nickel.
[3] .000030 [0.00076] gold in the mating area, with gold flash on remainder, over .000050 [0.00127] min. nickel.
[4] .000030 [0.00076] gold in the mating area, with gold gradient on remainder, over .000050 [0.00127] min. nickel.
[5] Contacts can only be used in Metrimate, Series 1 (Arr. 23-24), Series 4 (Arr. 23-13M, 23-16M, 23-22M), and VDE connectors.
[6] To use with the 626 Pneumatic Tool System: remove the crimping head from the Straight Action Hand Tool (SAHT) Assembly, order SAHT Adapter **Part Number** 217201-1, Adapter Holder **Part Number** 356304-1 (with ratchet) or 189928-1 (without), and Power Unit **Part Number** 189721-1 (hand actuated) or 189722-1 (foot actuated).
[S] Standard reeling of strip form contacts.
*Commercial PRO-CRIMPER II hand tool for field repair only. **Note:** Die Set can be adapted for use with the 626 Pneumatic Tool System.
‡Single contact, free-air test current is not to be construed as contact rating current. Use only for testing. Refer to contact current carrying capability information on page 9095.
Insertion Tool Part Number 91002-1 (for insulation diameters .070 [1.78] or less), **Number** 200893-2 (for insulation diameters .090 [2.29] max.).
Extraction Tool Part Number 305183**.**
(Instruction Sheet 408-1216)
***Call the Technical Support Center at 1-800-522-6752 for Automatic Machine Applicator Part Numbers.

For complete product information, order Catalog 65910

Type III+, Solder Versions

Material:
Contact Body and Tab—Brass
Retention Spring—Stainless steel

Finish:
See chart



Pin



Socket

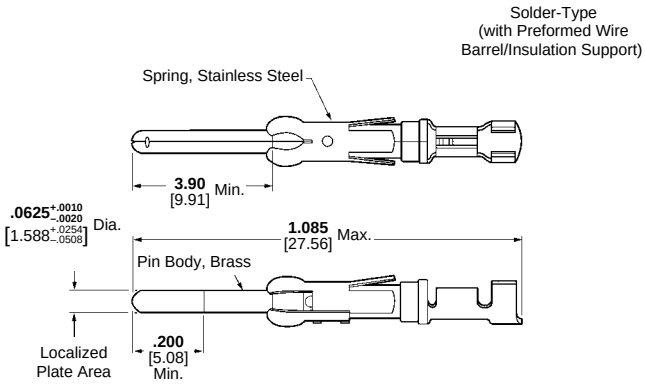

Pin **Socket**



Pin



Socket

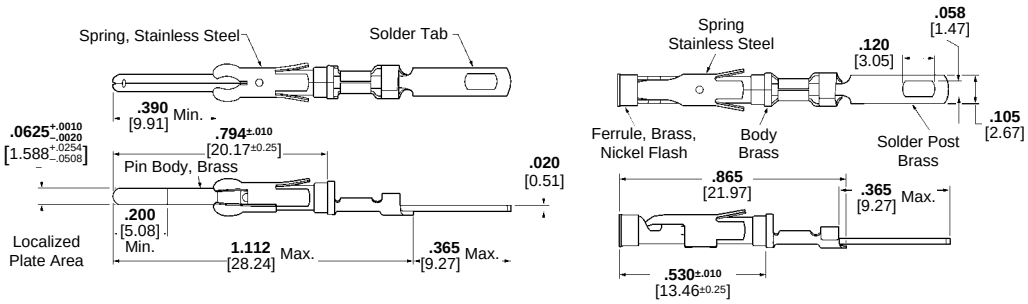

Pin **Socket**

Contact Size 16—Pin Diameter .062 [1.57] (Test Current, 13 Ampere)‡

Wire Size Range		Contact Finish	Loose Piece Contact Part Numbers	
AWG	[mm²]		Pin	Socket
26-20	0.12-0.6	Gold/Nickel[1]	66182-1	66183-1
18-16	0.8-1.4	Gold/Nickel[1]	66180-1	66181-1
Solder Tab		Duplex[2]	202236-1	202237-1
		Bright Tin-Lead[3]	202236-2	202237-2

[1] .000030 [0.00076] gold in mating area over .000050 [0.00127] nickel.
[2] Duplex plated .000030 [0.00076] gold in mating area over .000050 [0.00127] nickel on contact body; bright tin-lead on solder tab.
[3] Bright tin-lead on entire contact.

Note: These contacts can be used in Multimate contact cavities of all connector housings.

‡Single contact, free-air test current is not to be construed as contact rating current. Use only for testing. Refer to contact current carrying capability information on page 9095.

Extraction Tool **Part Number** 305183 (Instruction Sheet 408-1216)

For complete product information, order Catalog 65910

Products for Industrial & Commercial Applications
Dimensions are shown for reference purposes only.
Dimensions are in inches and millimeters unless otherwise specified. Values in brackets are metric equivalents.
Specifications subject to change.
Technical Support Center
1-800-522-6752
www.tycoelectronics.com

Type III+, Crimp, Snap-In Grounding Pins (make first - break last)

Material and Finish:

Contact Body—Copper alloy, plated tin or gold
Spring—Stainless steel
Contact Size—16
Pin Diameter—.062 [1.57]

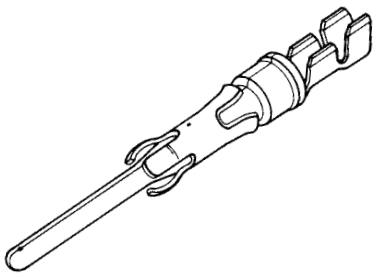

Related Product Data:

Application Tooling—Section 13

Technical Documents: page 9096

Contact Size 16—Pin Diameter .062 [1.57]

Wire Size Range [mm²]	Wire Size Range AWG	Ins. Dia. Range[1]	Contact Finish	Grounding Pin Part Numbers: Strip Form	Grounding Pin Part Numbers: Loose Piece	Strip Form Applicator Part No.	Loose Piece Hand Tool Part No.
0.12-0.2	26-24	**.035-.055** 0.89-1.4	Tin-Lead	164159-3	164162-1	—	90066-7[5] or 58495-1*
			Sel. Gold/Nickel[4]	164159-4	164162-2		
0.2-0.6	24-20	**.045-.070** 1.14-1.78	Bright Tin-Lead	164160-3	164163-1	466323-□*** or 466907-2***	90066-7[5] or 90067-4[5] or 58495-1*
			Sel. Gold/Nickel[4]	164160-4	164163-2		
0.8-1.4	18-16	**.078-.098** 1.98-2.49	Tin-Lead	164161-3	164164-1	466741-□*** or 680114-3***	90067-5[5] or 90067-4[5] or 58495-1*
			Sel. Gold/Nickel[4]	164161-4	164164-2		

[1] Overall insulation crimp diameter, including crimp barrel, must not exceed .125 [3.18].
[4] Gold flash over .000030 [0.00076] min. nickel on entire contact, with .000030 [0.00076] gold in contact area.
[5] To use with the 626 Pneumatic Tool System: remove the crimping head from the Straight Action Hand Tool (SAHT) Assembly, order SAHT Adapter **Part Number** 217201-1, Adapter Holder **Part Number** 356304-1 (with ratchet) or 189928-1 (without), and Power Unit **Part Number** 189721-1 (hand actuated) or 189722-1 (foot actuated).
*Commercial PRO-CRIMPER II hand tool for field repair only. **Note:** Die Set can be adapted for use with the 626 Pneumatic Tool System.
***Call the Technical Support Center at 1-800-522-6752 for Automatic Machine Applicator Part Numbers.
Extraction Tool Part Number 725840-1

Type III+, Posted

(Replacement Contacts,
See Note Below)



Pin



Socket

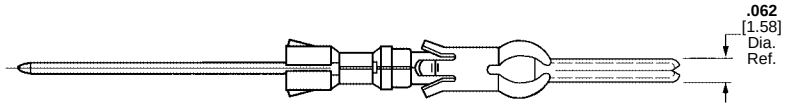

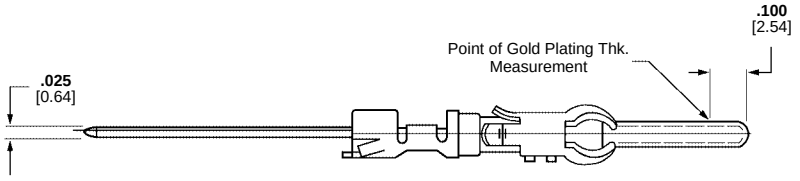

Pin

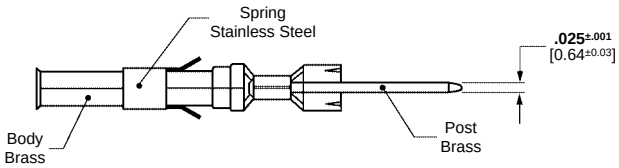

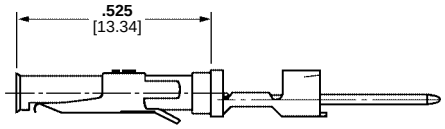

Socket

Material:

Contact Body and Post—Brass
Retention Spring—Stainless steel

Finish:

See chart.

Contact Size 16—Pin Diameter .062 [1.57] (Test Current, 13 Ampere)‡

Termination Method	Post Configuration	Contact Finish	Loose Piece Contact Part Numbers					
			3 Termination High Post		2 Termination High Post		1 Termination High Post	
			Pin	Socket	Pin	Socket	Pin	Socket
Wrap-Type	**.025 x .025** 0.64 x 0.64	Sel. Gold/Nickel[1]	66460-9	66461-9	66460-8	66461-8	66460-7	66461-7
		Gold/Nickel[2]	66460-6	66461-6	—	66461-5	66460-4	66461-4
		Bright Tin-Lead	66460-3	66461-3	66460-2	66461-2	66460-1	66461-1
	.045 x .045 1.14 x 1.14	Sel. Gold/Nickel[1]	66471-9	66473-9	—	—	66471-7	66473-7
		Bright Tin-Lead	66471-3	66473-3	—	—	66471-1	66473-1
	.031 x .062 0.79 x 1.57	Sel. Gold/Nickel[1]	66470-9	—	—	—	66470-7	—
TERMI-POINT Clip	**.031 x .062** 0.79 x 1.57	Sel. Gold/Nickel[1]	66468-9	66459-9	—	—	—	—

[1] Gold flash over .000050 [0.00127] nickel on entire contact, with .000030 [0.00076] gold to a distance of .200 [5.08] from mating end. Gold thickness controlled on socket O.D.

[2] .000030 [0.00076] gold over .000050 [0.00127] nickel on contact body. Gold thickness controlled on socket O.D.

Posts plated tin-lead over copper.

Extraction Tool **Part Number** 305183 (Instruction Sheet 408-1216)

Insertion Tool **Part Number** 200893-2

Note: These contacts are used as replacement contacts for all posted connectors.

‡Single contact, free-air test current is not to be construed as contact rating current. Use only for testing. Refer to contact current carrying capability information on page 9095.

For complete product information, order Catalog 65910

Products for Industrial & Commercial Applications

Dimensions are shown for reference purposes only.

Dimensions are in inches and millimeters unless otherwise specified. Values in brackets are metric equivalents.

Specifications subject to change.

Technical Support Center
1-800-522-6752
www.tycoelectronics.com

Type II, Crimp, Snap-In

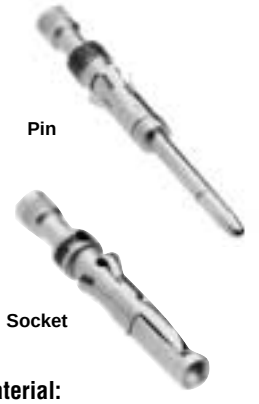

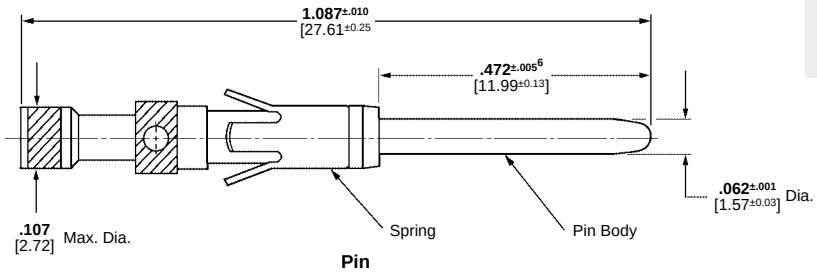

Pin

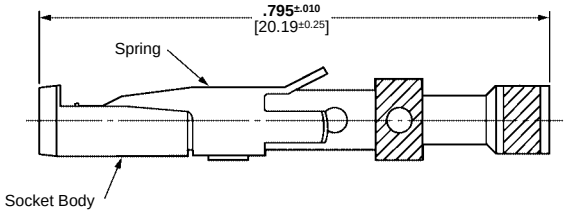

Socket

Material:

Contact Body — Brass
Retention Spring — Stainless steel

Finish:

Contact Body — .000030 [0.00076] gold over .000050 [0.00127] nickel. Gold thickness controlled on socket O.D.

Technical Documents:

Product Specification
108-10039
Application Specification
114-10026

Contact Size 16—Pin Diameter .062 [1.57] (Test Current, 13 Ampere)‡

Wire Size Range AWG	Wire Size Range [mm²]	Ins. Dia. Range[1]	Tape Mounted Contact Part Numbers[2] Pin	Tape Mounted Contact Part Numbers[2] Socket	Loose Piece Contact Part Numbers Pin	Loose Piece Contact Part Numbers Socket	Contact Color Code	Tooling Part Numbers: Tape Mounted: Dies for AMP-TAPETRONIC Machine 69875	Tooling Part Numbers: Loose Piece: Dies for Pneumatic Tool*	Tooling Part Numbers: Loose Piece: Hand Tool
28-24	0.08-0.20	**.035-.055** 0.89-1.40	201611-4	—	201611-1[4]	201613-1[5]	Red/Red	90249-2	90230-1	58305-1 or 601967-1
		.048-.065 1.22-1.65	—	—	201334-1[4]	201332-1[5]	Red/Red			
24-20	0.2-0.6	**.040-.062** 1.02-1.57	201578-4	—	201578-1[4]	201580-1[5]	Yellow/Red	90249-2	90230-1	58305-1
		.055-.088 1.40-2.16	201330-6	201328-9	201330-1[4]	201328-1[5]	Yellow/Red			58541-1** or 601967-1
18 (Two)	0.9-0.9 (Two)	No. Ins. Support	—	—	202725-1[4]	202726-1[4]	Blue	—	90231-2	45098 or 601967-1
18-16	0.8-1.4	**.080-.105** 2.03-2.67	—	—	202507-1[4]	202508-1[5]	—	—	—	90136-1 or 601967-1
		No. Ins. Support	200336-6	200333-8	200336-1[4]	200333-1[4]	Blue/Blue	90250-1	90231-2	45098
			—	—	204219-1[5,6]	—	Blue/Blue	—		58541-1** or 601967-1
14	2	No. Ins. Support	212618-2[3]	201568-3	201570-1[4]	201568-1[5]	Violet/Blue	90250-1	90231-2	45098
			—	—	212618-1[3,6,†]	—	—	—		58541-1** or 601967-1

[1] Overall insulation crimp diameter, including crimp barrel, must not exceed .125 [3.18].
[2] For AMP-TAPETRONIC Machine No. 69875, order contacts by Tape Mounted Contact No., plus packaging code "IM REEL" (5000 parts per reel).
[3] Grounding pin is used to provide a make-first/break-last condition when mating and unmating connector halves.
[4] Use turret TH502 (1-601967-6) with hand tool 601967-1.
[5] Use turret TH501 (1-601967-5) with hand tool 601967-1.
[6] Pin length is .630±.005 [16.002±.127] on these two pins.

*Use hand actuated Power Unit **Part Number** 189721-2 or foot actuated Power Unit **Part Number** 189722-2. Both units require "C" Head Die Set Adapter **Part Number** 318161-1 and an Adapter Holder **Part Number** 356304-1 (with ratchet) or **Part Number** 189928-1 (without ratchet). Request Catalog 124208 for more information on the 626 Pneumatic Tool System.

**Commercial PRO-CRIMPER II Hand Tool for field repair use only.

† Does not use Hand Tool **Part Number** 601967-1.

‡ Single contact, free-air test current is not to be construed as contact rating current. Use only for testing. Refer to contact current carrying capability information on page 9095.

Insertion Tool **Part Number** 200893-2 (for insulation diameters .070 [1.78] or less).

Extraction Tool **Part Number** 305183 (Instruction Sheet 408-1216)

Metrimate Pin, Size 16 (with insulation support); Socket, Size 16 (with insulation support); Grounding Pin, Size 16 (without insulation support).

For complete product information, order Catalog 65910

Products for Industrial & Commercial Applications
Dimensions are shown for reference purposes only.
Dimensions are in inches and millimeters unless otherwise specified. Values in brackets are metric equivalents.
Specifications subject to change.
Technical Support Center 1-800-522-6752 www.tycoelectronics.com

Size 20 DF, Crimp, Snap-In

Contact Size—20
Pin Diameter—.040 [1.02]
***Test Current**—**7.5 ampere**
(Single contact, free-air test current; not to be construed as contact rating current. Use only for testing.)



Pin



Socket

Material:

Pin Body—Brass
Socket—Phosphor bronze

Contact Finish:

A—Select gold flash over nickel on entire contact, with additional .000030 [0.00076] gold on mating end

B—Duplex plated .000030 [0.00076] gold on mating end, tin-lead on termination end, with entire contact nickel underplated

C—Gold flash over nickel on entire contact

D—Duplex plated gold flash on mating end, tin-lead on termination end, with entire contact nickel underplated

***Note:** Total current capacity of each contact in any given connector is dependent on the heat rise resulting from the combination of electrical loads of all contacts in the connector arrangement and the maximum ambient temperature in which the connector will be operating. See page 9095.

Insertion/Extraction Tool
Part Number 91285-1

Instruction Sheet—408-9404

This tool includes interchangeable tips to Insert/Extract:

Size 22, 28-22 AWG [0.08-0.03mm²] Crimp Contacts

Size 20, 28-20 AWG [0.08-0.6mm²] Crimp and Solder Cup Contacts

Size 20, Posted Contacts

With Insulation Support

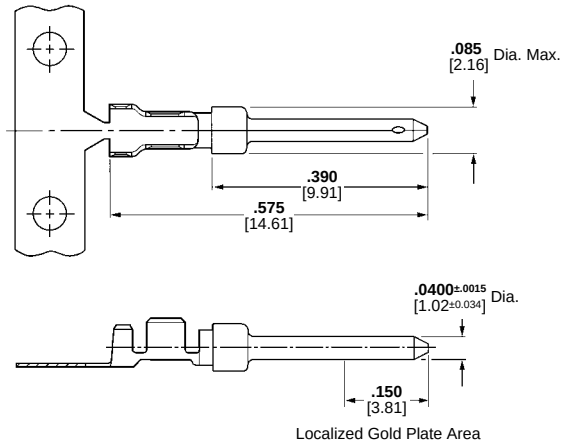

Pin

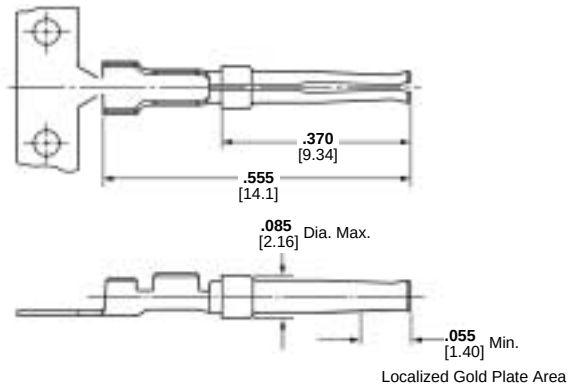

Socket

Wire Size Range	Ins. Dia. Max.	Contact Finish Code	Contact Part Numbers				Tooling		Color Code (Loose Piece)
			Pin		Socket				
			Strip Form	Loose Piece	Strip Form	Loose Piece	Strip Form Applicator††	Hand Tool	
28-24 AWG [0.08-0.2 mm²]	.040 1.02	A	66507-3	66507-9	66505-3	66505-9	466423-□[2] or 466901-1[2] or 1016015-1[2]	90302-1[1]	Blue Dot
		B	3-66507-0	5-66507-7	6-66505-0	6-66505-2			
		C	66507-4	1-66507-0	66505-4	1-66505-0			
		D	3-66507-1	5-66507-9	5-66505-7	5-66505-9			
	.060 1.52	A	66682-2	66682-4	66683-2	66683-4	466758-2[2] or 466963-1[2] or 567804-1[2]	90374-1[1]	Black Dot
		B	66682-9	1-66682-1	1-66683-0	—			
		D	66682-6	—	66683-7	—			
26-22 AWG [0.12-0.4 mm²]	.050 1.27	A	745254-2	745254-6	745253-2	745253-6	466968-1[2] or 567036-□[2] or 567849-1[2]	90406-1[1]	Yellow Dot
		B	1-745254-4	1-745254-6	1-745253-4	1-745253-6			
		C	745254-3	745254-7	745253-3	745253-7			
		D	1-745254-1	1-745254-3	1-745253-1	1-745253-3			
24-20 AWG [0.2-0.6 mm²]	.050 1.27	A	66506-3	66506-9	66504-3	66504-9	466422-□[2] or 466900-1[2] or 567801-1[2] or 1016002-1[2]	90302-1[1]	Red Dot
		B	2-66506-4	5-66506-7	5-66504-9	6-66504-0			
		C	66506-4	1-66506-0	66504-4	1-66504-0			
		D	2-66506-5	5-66506-9	5-66504-6	5-66504-7			

[1] To use with the 626 Pneumatic Tool System: remove the crimping head from the Straight Action Hand Tool (SAHT) Assembly, order SAHT Adapter **Part Number** 217201-1, Adapter Holder **Part Number** 356304-1 (with ratchet) or 189928-1 (without), and Power Unit **Part Number** 189721-1 (hand actuated) or 189722-1 (foot actuated).
[2] For complete information on AMP Strip Form Applicators for fully automatic and semiautomatic machines, contact the Technical Support Center: 1-800-522-6752.
Note: Commercial PRO-CRIMPER II Maintenance and Repair Hand Tool for Wire Size 28-24 AWG [0.08-0.2mm²] (Ins. Dia. Max. .040 [1.02]), and Wire Size 24-20 AWG [0.2-0.6mm²] (Ins. Dia. Max. .060 [1.52])—**Part Number** 58448-2.
Note: Die Set **Part Number** 58448-3 can be adapted for use with the 626 Pneumatic Tool System.

For complete product information, order Catalog 65910

Products for Industrial & Commercial Applications
Dimensions are shown for reference purposes only.
Dimensions are in inches and millimeters unless otherwise specified. Values in brackets are metric equivalents.
Specifications subject to change.
Technical Support Center 1-800-522-6752 www.tycoelectronics.com

Size 20 DF, Crimp, Snap-In

Contact Size—20
***Test Current**—**7.5 ampere**
(Single contact, free-air test current; not to be construed as contact rating current. Use only for testing.)



Pin



Socket

Material:

Pin—Brass
Socket—Phosphor bronze

Contact Finish:

Gold flash over nickel on entire contact, with additional .000030 [0.00076] gold on mating end

Without Insulation Support

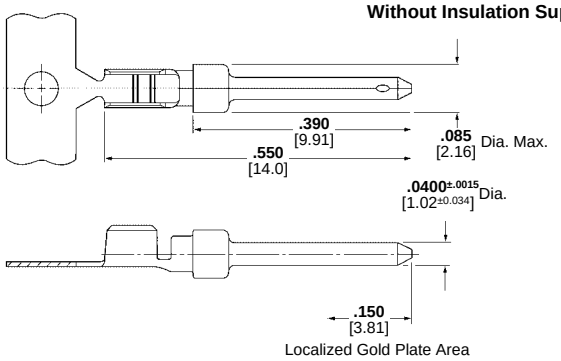

Pin

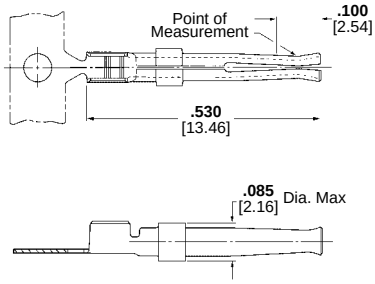

Socket

Wire Size Range	Ins. Dia. Max.	Contact Finish Code	Contact Part Numbers				Tooling		Color Code (Loose Form)
			Pin		Socket		Strip Form Applicator[1]	Hand Tool	
			Strip Form	Loose Piece	Strip Form	Loose Piece			
28-24 AWG [0.08-0.2 mm²]	.068 1.73	A	205310-2	—	205311-3	—		90265-1	Blue Dot
		B	—	—	2-205311-1	—			
		C	205310-4	—	205311-4	—			
		D	2-205310-2	—	1-205311-8	—			
24-20 AWG [0.2-0.6 mm²]	.068 1.73	A	205202-2	205202-4	205201-3	205201-5		90265-1	Red Dot
		B	2-205202-5	—	2-205201-5	—			
		C	205202-6	205202-7	205201-6	205201-7			
		D	2-205202-2	—	2-205201-2	—			
22-18 AWG [0.4-0.8 mm²]	.068 1.73	A	745229-2	745229-4	745230-2	745230-4		90405-1	Green Dot
		B	1-745229-1	—	1-745230-1	1-745230-3			
		C	745229-5	745229-7	745230-5	745230-7			
		D	—	—	745230-8	—			

[1] For complete information on AMP Strip Form Applicators for fully automatic and semiautomatic machines, contact the Technical Support Center: 1-800-522-6752.
Note: Wire insulation diameter is limited by the connector housing cavity and clearance for the insertion/extraction tool.

Size 20 DF, Solder, Snap-In



Pin



Socket

Contacts to be soldered to wire before being inserted into housing.
18 AWG [0.8-0.9mm²] Max. Wire

Note: Total current capacity of each contact in a given connector is dependent on the heat rise resulting from the combination of electrical loads of all contacts in the connector arrangement and the maximum ambient temperature in which the connector will be operating. See page 9095.

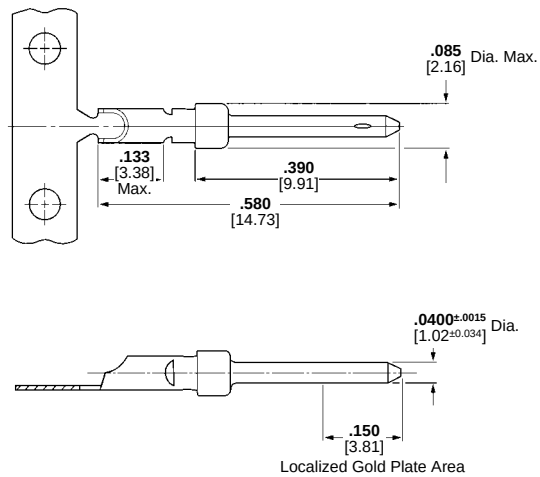

Pin

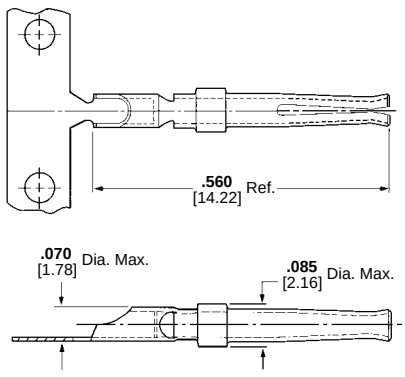

Socket

Strip Form Contact Part Number		Loose Piece Contact Part Number	
Pin	Socket	Pin	Socket
66570-2	66569-2	66570-3	66569-3

For complete product information, order Catalog 65910

Type I, Crimp, Snap-In



Pin

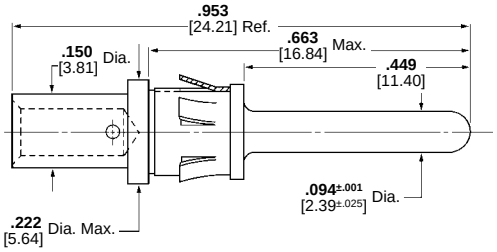

Pin

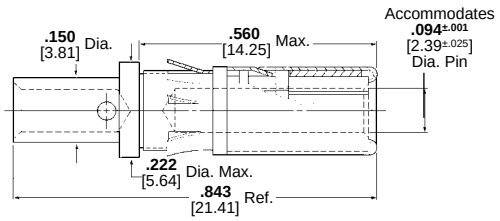

Socket



Socket

Material:

Contact Body—Bronze
Retention Spring—Beryllium copper

Finish:

Contact Body—.000030 [0.00076] gold over .000050 [0.00127] nickel. Gold thickness controlled on socket O.D.
Retention Spring—Nickel plated

Related Product Data:

Application Tooling—Section 13

Technical Documents:

Product Specification
108-10108
Application Specification
114-10037

Size 12—Pin Diameter .094 [2.39] (Test Current, 23 Ampere)‡

Wire Size Range		Loose Piece Contact Part Numbers		Tooling Part Numbers	
AWG	[mm²]	Pin	Socket	Dies for Pneumatic Tool*	Hand Tool
18-16	0.8-1.4	202421-1	202418-1	90122	90121
14-12	2-3	202422-1	202417-1	90122	90121

* Use hand actuated Power Unit **Part Number** 189721-2 or foot actuated Power Unit **Part Number** 189722-2. Both units require "C" Head Die Set Adapter **Part Number** 318161-1 and an Adapter Holder **Part Number** 356304-1 (with ratchet) or **Part Number** 189928-1 (without ratchet). Request Catalog 124208 for more information on the 626 Pneumatic Tool System.

‡Single contact, free-air test current; not to be construed as contact rating current. Use only for testing. Refer to contact current carrying capability information, page 9095.

Extraction Tool **Part Number** 305183-8 (Instruction Sheet 408-1216)

Type II and Type III+, Size 16

The Multimate features of the High Current Size 16 contact have been designed to fit into the existing AMP Connectors such as CPC (Circular Plastic Connector), CMC (Circular Metal-Shell Connector), G Series, M Series, Econoseal Metrimate Square Grid and Drawer Connector housings. An initial T-Rise test in free air has shown a **23 amp** capability with a 30°C T-Rise. The contact may be crimped onto 14 AWG wire with an AMP hand tool **Part Number** 601967-1. Use turret TH502 (1-601967-6) for the pin and turret TH501 (1-601967-5) for the socket.

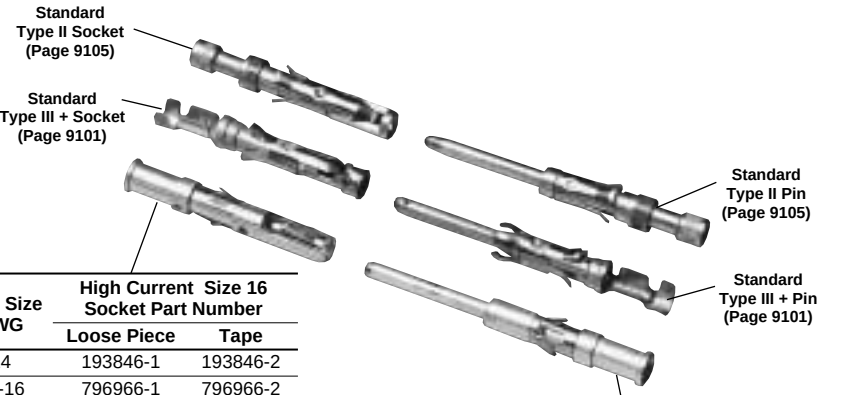

Wire Size AWG	High Current Size 16 Socket Part Number	
	Loose Piece	Tape
14	193846-1	193846-2
18-16	796966-1	796966-2

Wire Size AWG	High Current Size 16 Pin Part Number	
	Loose Piece	Tape
14	193844-1	193844-2
18-16	796964-1	796964-2

Material:

Pin Body — Leaded brass
Socket Body — Copper alloy
Louvertac Band — Beryllium copper
Retention Spring — Stainless steel

Finish:

Body — Silver
Louvertac Band — Gold



Extraction Tool
Part Number 305183
(Instruction Sheet 408-1216)

Current-Carrying Capacity. The graph shows current-carrying capacity versus temperature rise for a fully energized 6 position Metrimate Square Grid plug **Part Number** 207152-1 and receptacle **Part Number** 207153-1. These initial representative amperage ratings were conducted with 14 AWG wires that were 2 feet long.

Current Rating for 30°C Temperature Rise 100% Energized

6 Circuit Metrimate Connector (Wire-to-Wire)

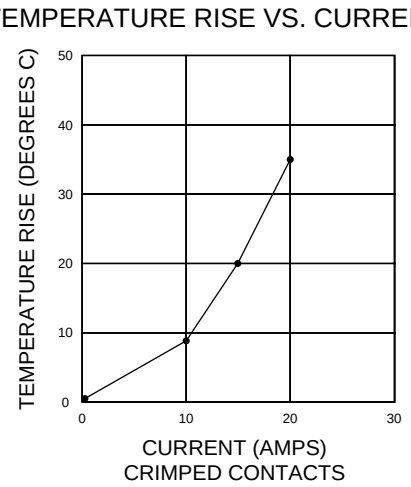

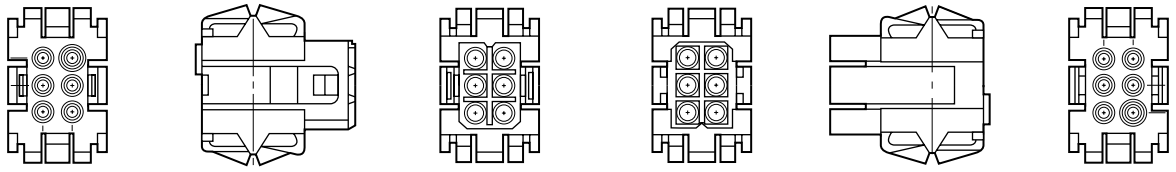

Plug (for Sockets)

Receptacle (for Pins)

Notes: 1. High Current contacts with Louvertac bands are **not** intermateable with any other contact.
2. Additional information on CPC and CMC connectors is available in Tyco Electronics Catalog No. 82021.
3. Additional information on G Series connectors is available in Tyco Electronics Catalog No. 82046.
4. Additional information on M Series connectors is available in Tyco Electronics Catalog No. 82003.
5. Additional information on Metrimate connectors is available in Tyco Electronics Catalog No. 82045.
6. Additional information on Econoseal connectors is available in Tyco Electronics Catalog No. 82057.
7. Additional information on LGH connectors is available in Tyco Electronics Catalog No. 82024.

For complete product information, order Catalog 65910

Products for Industrial & Commercial Applications
Dimensions are shown for reference purposes only.
Dimensions are in inches and millimeters unless otherwise specified. Values in brackets are metric equivalents.
Specifications subject to change.
Technical Support Center
1-800-522-6752
www.tycoelectronics.com

Size 20, Posted

The High Current Size 20 contact has been designed to fit into the Series 109 AMPLIMITE Connectors per MIL-C-24308.

Material:

Body — Copper alloy
Louvertac Band — Beryllium copper

Finish:

Body — Gold
Louvertac Band — Gold

Current-Carrying Capacity. The High Current Size 20 contact with a 20 gage wire attached to the .030 diameter solder tail acquired an initial 30°C T-Rise of **11.85 amps** in free air.

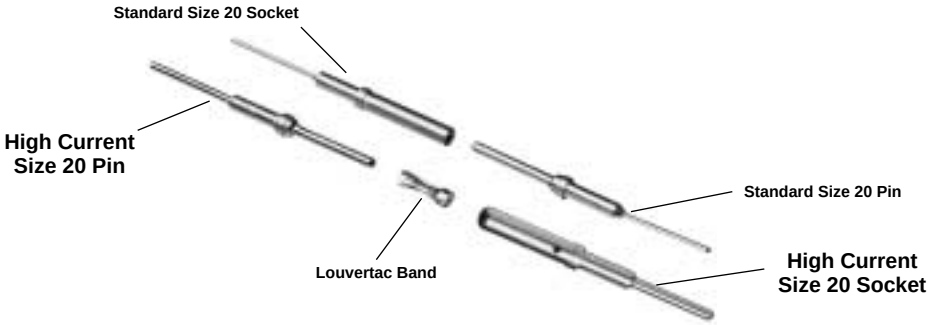

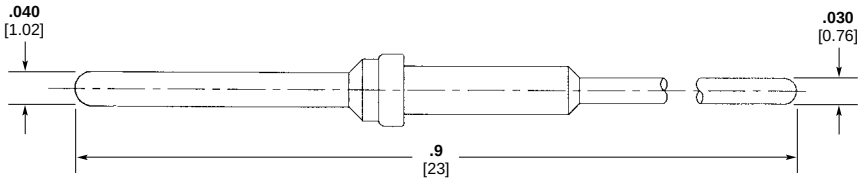

Pin
Part Number 194081-1

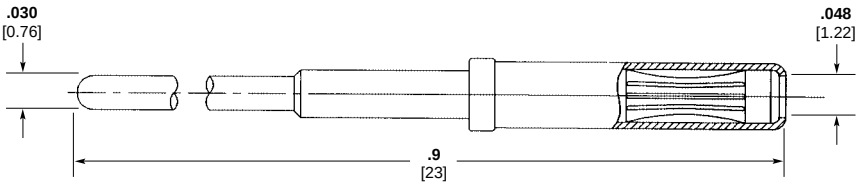

Socket
Part Number 194083-1

The contacts can be sold loose piece or installed into any of the MIL Standard connectors.

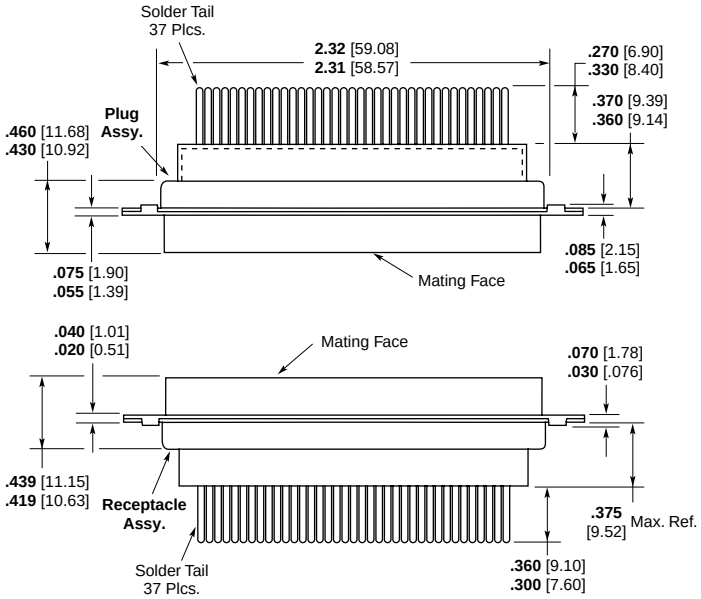

Typical Fully Loaded 37 Position Plug and Receptacle



Pin and Socket Insertion/Extraction Tool

Part Number 91067-2 or
MIL number M81969/1-02

Insertion tip, for replacement
Part Number 126195-3

Extraction tip, for replacement
Part Number 126195-4

Notes: 1. High Current contacts with Louvertac bands are **not** intermateable with any other contact.
2. Additional information on connectors is available in Tyco Electronics Catalog No. 82069.

For complete product information, order Catalog 65910

.125 POWERBAND Contacts, Crimp, Snap-In

Material and Finish:

Contact — Copper

Spring — Beryllium copper

Plating Code

A. 0.00508 [.000200] min. silver on contact area, 0.00127 [.000050] min. on remainder, all over 0.00127 [.000050] min. nickel underplate

B. 0.00076 [.000030] min. gold on contact area, gold flash on remainder, all over 0.00127 [.000050] min. nickel underplate

Related Product Data:

Application Tooling—Section 13

Technical Documents: page 9096

Instruction Sheet
408-4374

Extraction Tool Part Number 318813-1

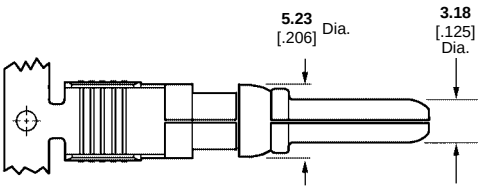

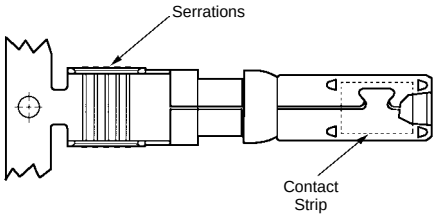

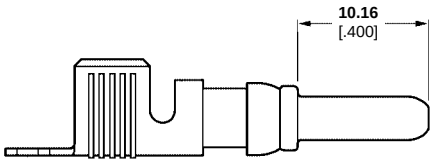

.125 POWERBAND Pin Contact

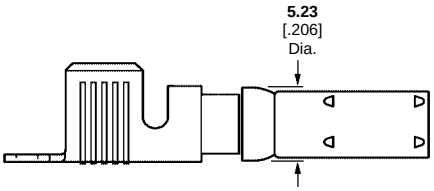

.125 POWERBAND Socket Contact

Pin Diameter .125 [3.175] — (Test Current, 50 Amperes)‡

Wire Size AWG/mm²	Contact Finish	Pin Length	Contact Part Numbers				Tooling Part Numbers	
			Strip		Loose Piece		Heavy Duty Miniature (HDM) Applicators (for AMP-O-LECTRIC Model G Machine, Base Part No. 354500)	Die Sets for Hand Tool 69710-1 or 626 Pneumatic Tool System*
			Pin	Socket	Pin	Socket		
14-12 2-3	A	Standard	213845-1	213847-1	213845-3	213847-3	680195-3	356612-1
	B	Standard	213845-2	213847-2	213845-4	213847-4		
	A	Extended[1]	213845-5	—	213845-7	—		
	B	Extended[1]	213845-6	—	213845-8	—		
10-8 5-8	A	Standard	213841-1	213843-1	213841-3	213843-3	680197-3	356611-1 (8 AWG) 356611-2 (10 AWG)
	B	Standard	213841-2	213843-2	213841-4	213843-4		
	A	Extended[1]	213841-5	—	213841-7	—		
	B	Extended[1]	213841-6	—	213841-8	—		

[1] For use in Metrimate Drawer Connectors only.

‡Single contact, free-air test current; not to be construed as contact rating current. Use only for testing. Refer to contact current carrying capability information, page 9095.

Note: Standard Size 8, High Current Size 8 upgrade, and .125 POWERBAND contacts are **no**t intermateable.

*A typical 626 Pneumatic Tool System requires: a power unit (**Part Number** 189721-2, hand actuated or 189722-2, foot actuated), an adapter holder (**Part Number** 356304-1, with ratchet), and "C" Head adapter **Part Number** 318161-1.

Standard, Size 8, 4/8 Indent Crimp



Pin



Socket

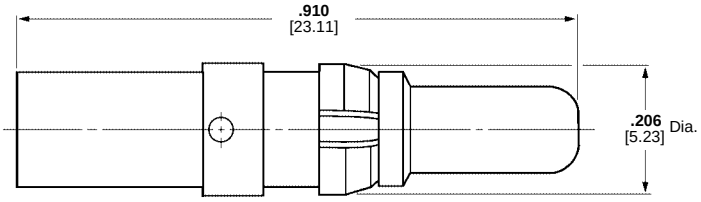

Pin

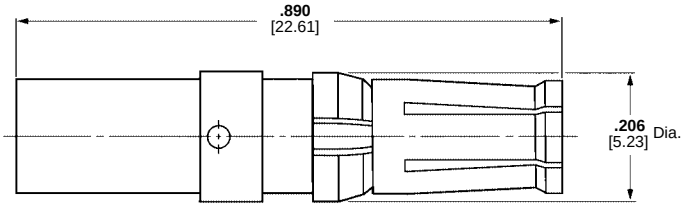

Socket

Note: Standard Size 8 is **not** intermateable with High Current Size 8.

Material:

Contact Body—Copper alloy
Retention Clip—Phosphor bronze

Finish:

Contact Body—.000050 [0.00127] gold over .000050 [0.00127] nickel
Retention Spring—Nickel plated

Technical Documents:

Product Specification
108-10045
Application Specification
114-10014

Power Contacts, Standard, Size 8 (Test Current, 45 Amperes)‡

Wire Range		Part Numbers			
		Contacts		Crimping Tools	
AWG	[mm²]	Pin	Socket	Tool No.	Positioner
18-16	0.8-1.4	213567-1*	212014-1*	608668-1	(P) SP867 (S) 608668-2
14-12	2-3	213662-1*	212008-1*	608651-1	(P) SP867 (S) 608651-2
10	5	213740-1	213737-1	608651-1	(P) 608651-3 (S) 608651-2
8	8	213552-2	213750-1	608651-1	(P) 608651-3 (S) 608651-2

* Mating pin and socket combinations shown are NOT for use in AMPLIMITE Subminiature D connectors.
‡ Single contact, free-air test current; not to be construed as contact rating current. Use only for testing. Refer to contact current carrying capability information, page 9095.

For complete product information, order Catalog 65910

Products for Industrial & Commercial Applications
Dimensions are shown for reference purposes only.
Dimensions are in inches and millimeters unless otherwise specified. Values in brackets are metric equivalents.
Specifications subject to change.
Technical Support Center
1-800-522-6752
www.tycoelectronics.com

High Current, Size 8 for Metrimate Drawer Connectors

The Louvertac bands have the versatility of being designed into contact dimensions used in existing AMP connectors.

Metrimate High Current contacts have been designed to fit into the existing Drawer Connector housings. A fully energized 8 position connector with 8 gage wires can handle 30 amps per line with a 30°C T-rise on either the cable-to-cable or cable-to-board.

Material:

Contact Body — Copper alloys
Louvertac Band — Beryllium copper
Retention Spring — Stainless steel

Finish:

Gold

Performance Characteristics:

Connector Voltage Rating — 600 VAC

Cable-to-Cable

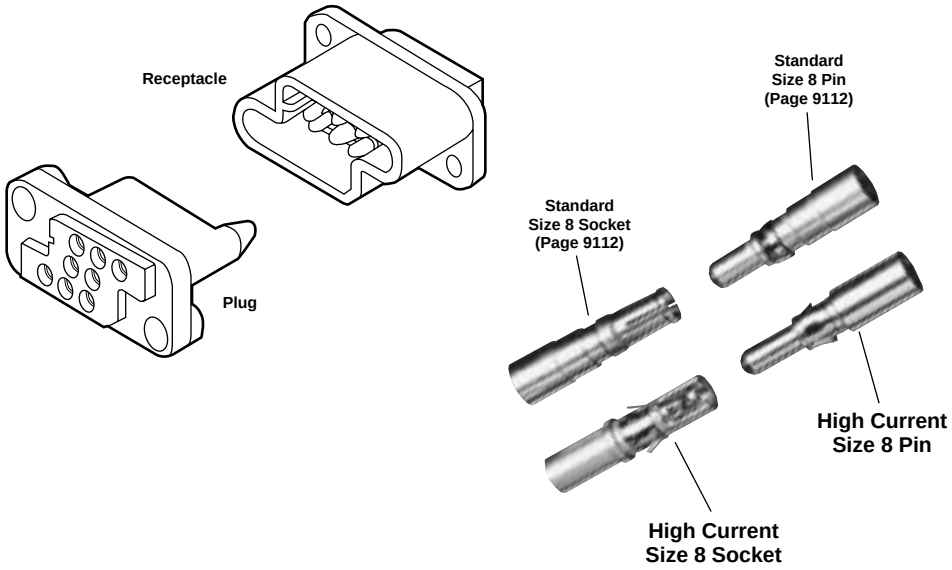

Power Contacts, High Current, Size 8 (Test Current, 56 Amperes)

Wire Size		Contact Part Numbers		Crimp Tools	
AWG	[mm²]	Pin	Socket	Hand Tool	Positioner
8	8	193457-1	193458-1	Daniels[1] #M310 or Tyco Electronics Part Number 356114-1	Daniels[1] #TP944 or Tyco Electronics Part Number 356336-1
10	5	193642-1	193643-1		
12-14	2-3	193534-1	193535-1		

[1] Daniels Manufacturing Corp., Orlando, FL
Extraction Tool Part Number 318813-1

Cable-to-Board

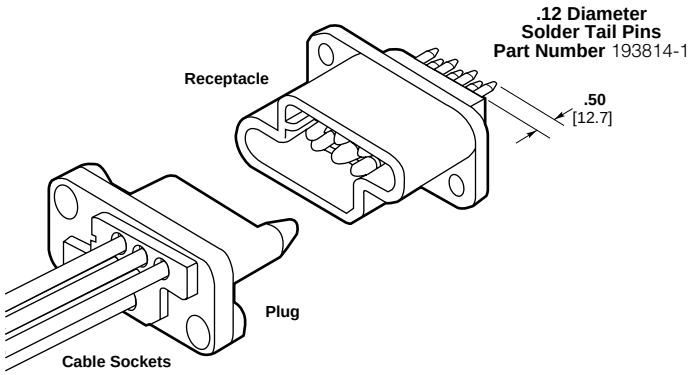

A typical application would have solder tail pins mounted into the receptacle and crimp sockets mounted into the plug.

Technical Documents:

Product Specification
108-1449 Metrimate Pin and Socket with Louvertac High Current Contact

Drawer Connector Housings

Size Configuration	Housing Part Numbers	
	Plug	Receptacle
8 Positions (8 Size 8 Cavities)	213499-1	213500-1
15 Positions (3 Size 8 Cavities & 12 Size 16 Cavities)	213426-1	213427-1

Extraction Tool Part Number 318813-1

Notes: 1. High Current contacts with Louvertac bands are **not** intermateable with any other contact.
2. Additional information on connectors is available in AMP Metrimate Pin and Socket Connectors Catalog 82045.

For complete product information, order Catalog 65910

Products for Industrial & Commercial Applications
Dimensions are shown for reference purposes only.
Dimensions are in inches and millimeters unless otherwise specified. Values in brackets are metric equivalents.
Specifications subject to change.
Technical Support Center
1-800-522-6752
www.tycoelectronics.com

Type XII, Precision Formed, Crimp, Snap-In

Material:
Copper

Finish:
A—Tin-lead
B—.000030 [0.00076] selective gold over .000030 [0.00076] nickel
C—.000100 [0.00254] silver plated contacts with lubricant added

Test Current Rating:
Silver or Gold—35 amperes ‡
Tin Lead—15 amperes ‡

Related Product Data:
Application Tooling—Section 13

Technical Documents: page 9096

‡Single contact, free-air test current; not to be construed as contact rating current. Use only for testing. Refer to contact current carrying capability information, page 9095.



Extraction Tool Part Number 91019-3



Male

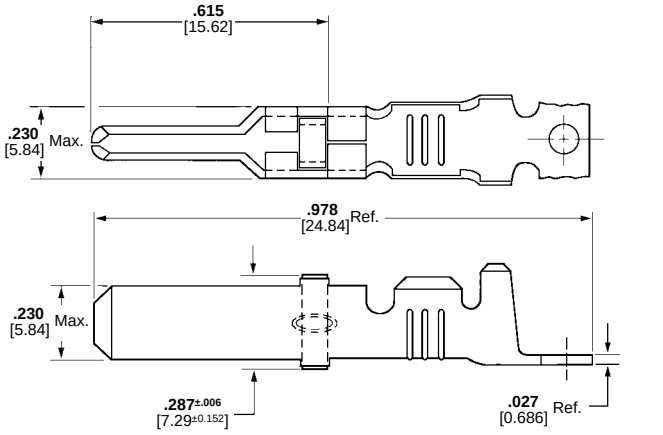

Male



Female

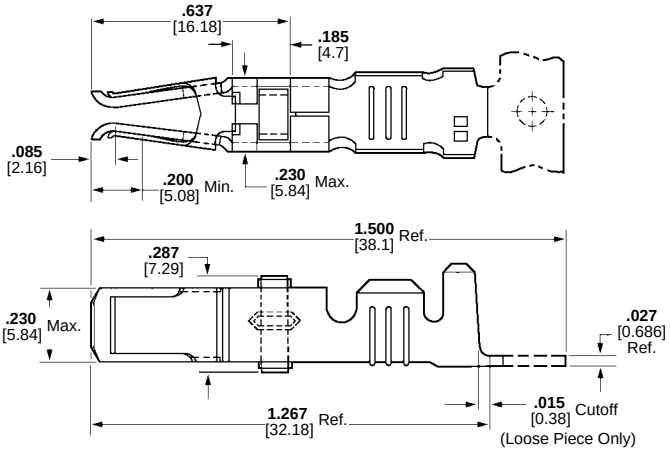

Female

Wire Size Range[1] AWG	Wire Size Range[1] mm²	Ins. Dia. Range	Contact Finish	Strip Form Contact Part Numbers: Standard*** Male	Standard*** Female	Heavy Duty Miniature*** Male	Heavy Duty Miniature*** Female	Loose Piece Contact Part Numbers: Male	Loose Piece Contact Part Numbers: Female	Tooling: Heavy Duty Miniature Applicator	Tooling: Die Set for Hand Tool 69710-1 or 626 Pneumatic Tool System
16 and 14-12	1.25-1.4 and 2-3	**.135-.160** 3.43-4.06	A	66255-1	66740-7	66255-5	1-66740-2	66261-1	66740-8	567455-□***	90145-2[3,7] and 90145-1[4,7]
				66256-1[2]	—	66256-5[2]	—	66262-1[2]	—		
			B	66255-2	66740-5	66255-6	1-66740-1	66261-2	66740-6		
				66256-2[2]	—	66256-4[2]	—	66262-2[2]	—		
			C[5]	66255-7	66740-1	66255-8	66740-9	66261-4	66740-2		
				66256-6[2]	—	66256-7[2]	—	66262-4[2]	—		
10	5-6	**.190-.220** 4.83-5.59	A	66253-1	66741-7	66253-5	1-66741-2	66259-1	66741-8	567021-□***	90140-1[7]
				66254-1[2]	—	—	—	66260-1[2]	—		
			B	66253-2	66741-5	66253-6	1-66741-1	66259-2	66741-6		
				66254-2[2]	—	—	—	66260-2[2]	—		
			C[5]	66253-4	66741-1	66253-8	66741-9	66259-4	66741-2		
				66254-4[2]	—	—	—	66260-4[2]	—		

[1] Wire strip length—.281 [7.14].
[2] Ground contact.
[3] Die insert **Part Number** 90145-2 is for crimping 16 AWG [1.25-1.4 mm²] wire.
[4] Die insert **Part Number** 90145-1 is for crimping 14-12 AWG [2-3 mm²] wire.
[5] Recommended for high current/vibration applications where fretting corrosion is a problem.
[7] Die Set requires "C" Head Adapter **Part Number** 318161-1; Adapter Holder **Part Number** 356304-1 (with ratchet) or 189928-1 (without); and Power Unit **Part Number** 189721-2 (hand actuated) or 189722-2 (foot actuated).
Extraction Tool Part Number 91019-3
***Call the Technical Support Center at 1-800-522-6752 for Automatic Machine Applicator Part Numbers.

For complete product information, order Catalog 65910

Products for Industrial & Commercial Applications
Dimensions are shown for reference purposes only.
Dimensions are in inches and millimeters unless otherwise specified. Values in brackets are metric equivalents.
Specifications subject to change.
Technical Support Center 1-800-522-6752 www.tycoelectronics.com

Type XII, Crimp, Snap-In

The Multimate features of the High Current Type XII contact have been designed to fit into the existing AMP Connectors such as CPC (Circular Plastic Connector), CMC (Circular Metal-Shell Connector), G Series, and M Series housings. An initial T-Rise test in free air has shown a **60 amp** capability with a 30°C T-Rise with 8 gage wires. The contact may be crimped onto 8 AWG wire with a Daniels Hand Tool M310 or Tyco Electronics Part Number 356114-1 and Positioner TP1068S or Tyco Electronics Part Number 356119-1.

Material:

Body — Copper alloy
Louvertac Band — Beryllium copper
Retention Spring — Stainless steel

Finish:

Body — Silver
Louvertac Band — Gold



Extraction Tool
Part Number 224155-1

Current-Carrying Capacity. The graph shows current-carrying capacity versus temperature rise for a fully energized 3 position CPC plug Tyco Electronics Part Number 206037-2 and receptacle Tyco Electronics Part Number 206036-2. These initial representative amperage ratings were conducted with 8 AWG wires that were 3 feet long.

Cable-to-Cable



Current Rating for 30°C Temperature Rise 100% Energized

3 Circuit Connector (Wire-to-Wire)

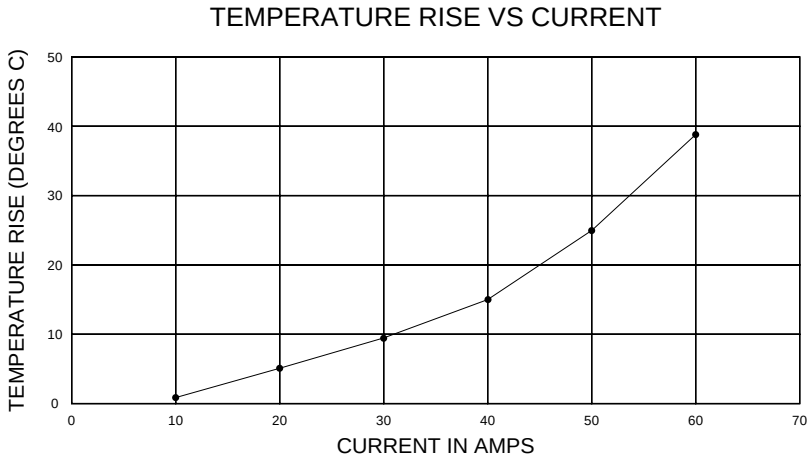



Plug
(For Sockets)



Square Flange Receptacle
(For Pins)

Notes: 1. High Current contacts with Louvertac bands are **not** intermateable with any other contact.
2. Additional information on CPC and CMC connectors is available in Tyco Electronics Catalog No. 82021.
3. Additional information on G Series connectors is available in Tyco Electronics Catalog No. 82046.
4. Additional information on M Series connectors is available in Tyco Electronics Catalog No. 82003.
5. Additional information on LGH connectors is available in Tyco Electronics Catalog No. 82024.

For complete product information, order Catalog 65910

Products for Industrial & Commercial Applications

Dimensions are shown for reference purposes only.

Dimensions are in inches and millimeters unless otherwise specified. Values in brackets are metric equivalents.

Specifications subject to change.

Technical Support Center
1-800-522-6752
www.tycoelectronics.com

Subminiature, Crimp, Snap-In, Size 16



Pin



Socket

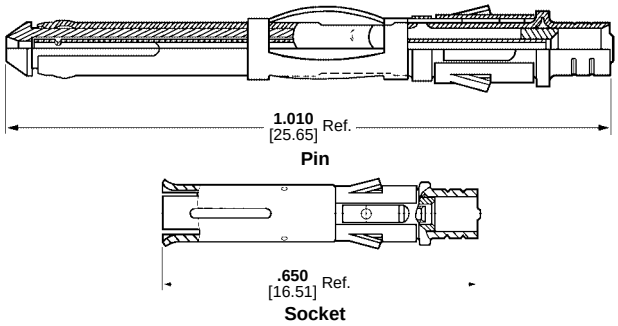

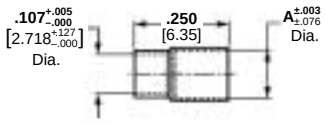

Ferrule
Part Number 225088-1—**Dim. A** .120 [3.05] Dia.
225088-3—**Dim. A** .123 [3.12] Dia.

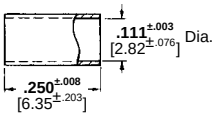

Ferrule
Part Number 1-332056-0

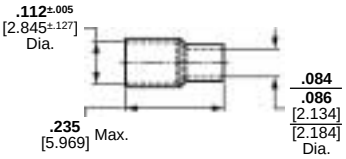

Ferrule
Part Number 1-332057-0

Material:

Outer Shell—Brass per MIL-C-50
Center Conductor—Beryllium copper per QQ-C-533 (Pin); Brass per QQ-B-626 (Socket)
Inner Dielectric—Polypropylene
Retention Spring—Stainless steel per QQ-S-766
Ferrule—Copper per QQ-C-576 or ASTM-B-152 (1-332056-0)

Finish:

Outer Shell, Center Conductor—See charts
Ferrule—Tin-lead per MIL-T-10727

Selection Chart for Coaxial Cable

Cable Size (RG/U)	Contact Finish	Loose Piece Contact Part Number		Ferrule Part Numbers	Tooling Part Numbers	
		Pin	Socket		Die Inserts for Hand Tool 69710-1 or Pneumatic Tool*	Hand Tool
178, 196	Gold/Nickel Gold/Copper[1]	226537-2	51565-2	1-332057-0	69690-2	69656-2
	Gold/Nickel Gold/Copper[2]	—	51565-5			
196 (Double Braid)	Gold/Nickel Gold/Copper[1]	226537-2	51565-2	225088-1	—	69656-9
	Gold/Nickel Gold/Copper[2]	—	51565-5			
174, 188, 316	Gold/Nickel Gold/Copper[1]	226537-1	51565-1	1-332056-0	69690	69656
	Gold/Nickel Gold/Copper[2]	226537-4	51565-4			
174 (Double Braid)	Gold/Nickel Gold/Copper[1]	226537-1	51565-1	225088-3	—	69656-7
	Gold/Nickel Gold/Copper[2]	226537-4	51565-4			
179, 187	Gold/Nickel Gold/Copper[1]	226537-1	51565-1	1-332056-0	69690-1	69656-1
	Gold/Nickel Gold/Copper[2]	226537-4	51565-4			
187 (Double Braid)	Gold/Nickel Gold/Copper[1]	226537-1	51565-1	225088-1	—	69656-8
	Gold/Nickel Gold/Copper[2]	226537-4	51565-4			
161	Gold/Nickel Gold/Copper[1]	226537-1	51565-1	1-332056-0	—	69656-5
	Gold/Nickel Gold/Copper[2]	226537-4	51565-4			

*Use hand actuated Power Unit **Part Number** 189721-2 or foot actuated Power Unit **Part Number** 189722-2. Both units require "C" Head Die Set Adapter **Part Number** 318161-1 and an Adapter Holder **Part Number** 356304-1 (with ratchet) or **Part Number** 189928-1 (without ratchet). Request Catalog 124208 for more information on the 626 Pneumatic Tool System.

Extraction Tool **Part Number** 305183

For complete product information, order Catalog 65910

Products for Industrial & Commercial Applications
Dimensions are shown for reference purposes only.
Dimensions are in inches and millimeters unless otherwise specified. Values in brackets are metric equivalents.
Specifications subject to change.
Technical Support Center
1-800-522-6752
www.tycoelectronics.com

Subminiature, Crimp, Snap-In, Size 16

Selection Chart for Twisted Pair and Shielded Wire

Wire Size AWG	Wire Size [mm²]	Contact Finish	Loose Piece Contact Part Numbers Pin	Loose Piece Contact Part Numbers Socket	Ferrule Part Numbers	Tooling Part Numbers: Die Inserts for Hand Tool 69710-1 or Pneumatic Tool*	Tooling Part Numbers: Hand Tool
30	0.05 (Twisted Pair, Solid)	Gold/Nickel Gold/Copper[1]	226537-3	51565-3	1-332057-0	69690-2	69656-2
28	0.08-0.09 (Twisted Pair, Solid)	Gold/Nickel Gold/Copper[1]	226537-3	51565-3	1-332057-0	69690	69656
28	0.08-0.09 (Twisted Pair, Stranded 7 Str., .0050 [0.13] Dia.)	Gold/Nickel Gold/Copper[1]	226537-3	51565-3	1-332057-0	69690-1 or 69690-2	69656-1 or 69656-2
26	0.12-0.15 (Twisted Pair, Solid or Stranded 7 Str. .0063 [0.16] Dia.)	Gold/Nickel[1] Gold/Copper	226537-3	51565-3	1-332057-0	69690	69656
26	0.12-0.15 (Shielded, .075 [1.91] Max. O.D.)	Gold/Nickel Gold/Copper[1]	226537-1	51565-1	1-332057-0	69690-3	69656-3
		Gold/Nickel Gold/Copper[2]	226537-4	51565-4			

[1] .000030 [0.00076] gold over .000050 [0.00127] nickel—outer shell and socket center conductor; .000030 [0.00076] gold over .000100 [0.00254] copper—pin center conductor.
[2] .000050 [0.00127] gold over .000050 [0.00127] nickel—outer shell and socket center conductor; .000050 [0.00127] gold over .000100 [0.00254] copper—pin center conductor.
* Use hand actuated Power Unit **Part Number** 189721-2 or foot actuated Power Unit **Part Number** 189722-2. Both units require "C" Head Die Set Adapter **Part Number** 318161-1 and an Adapter Holder **Part Number** 356304-1 (with ratchet) or **Part Number** 189928-1 (without ratchet). Request Catalog 124208 for more information on the 626 Pneumatic Tool System.

Note: A ferrule is required for each pin and socket.
Extraction Tool Part Number 305183

Miniature, Crimp, Snap-In, Size 12



Pin



Socket



Ferrule

Retention Spring
Part Number 201142-1

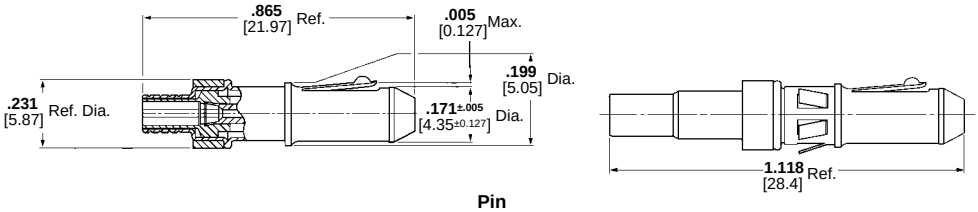

Pin

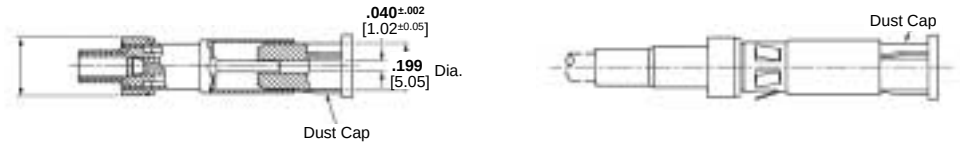

Socket

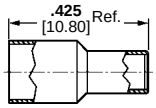

Ferrule

For complete product information, order Catalog 65910

Products for Industrial & Commercial Applications
Dimensions are shown for reference purposes only.
Dimensions are in inches and millimeters unless otherwise specified. Values in brackets are metric equivalents.
Specifications subject to change.
Technical Support Center 1-800-522-6752 www.tycoelectronics.com

Miniature, Crimp, Snap-In, Size 12

Material:

Outer Shell—Brass per MIL-C-50
Center Conductor—Brass per QQ-B-626
Inner Dielectric—Polymethylpentene
Retention Spring—Beryllium copper per QQ-C-533
Ferrule—Copper per QQ-C-576

Finish:

Outer Shell, Center Conductor—See charts on this page
Retention Spring—Nickel per QQ-N-290
Ferrule—Tin-lead per MIL-T-10727
Extraction Tool **Part Number** 305183-8

Selection Chart for Coaxial Cable

Cable Size (RG/U)	Contact Finish	Loose Piece Contact Part Numbers		Ferrule Part Numbers	Tooling Part Numbers	
		Pin	Socket		Die Inserts for Hand Tool 69710-1 or Pneumatic Tool*	Hand Tool
55, 55A, 55B 141, 142, 223	Gold/Nickel[1]	201145-4	201146-4	330478	69315-4	69248-4
	Gold/Copper[2]	—	201146-9			
58, 58A, 58B, 58C	Gold/Nickel[1]	201145-4	201146-4	328663	69220-2	45740-2
	Gold/Copper[2]	—	201146-9			
174, 179A, 187, 21-598	Gold/Nickel[1]	201143-1	201144-1	328666	69227-2	45638-2
	Gold/Copper[2]	—	201144-6			
180, 180A, 195, 21-597	Gold/Nickel[1]	201145-2	201146-2	328664	69222-2	45639-2
	Gold/Copper[2]	1-201145-0	1-201146-0			
178, 178A, 196	Gold/Nickel[1]	201511-1	201512-1	328667	69373	69186-2
188	Gold/Nickel[1]	201143-5	201144-5	328666	69227-2	45638-2
	Gold/Copper[2]	201143-7	201144-7			
122	Gold/Nickel[1]	201145-1	—	328664	69222-2	45639-2
188 Double Braid 316 Double Braid	Gold/Nickel[1]	201143-5	201144-5	221848-3	—	58290-1
	Gold/Copper[2]	201143-7	201144-7			
Special .125, .100, .066, .012DB	Gold/Nickel[1]	201143-1	201144-1	221848-3	—	58290-1

Selection Chart for Twisted Pair

Wire Size AWG	Wire Size [mm²]	Max. Ins. Dia. (Two Wires Combined)	Contact Finish	Loose Piece Contact Part Numbers		Ferrule Part Numbers	Tooling Part Numbers	
				Pin	Socket		Die Inserts for Hand Tool 69710-1 or Pneumatic Tool*	Hand Tool
28-26	0.08-0.15 (Solid)	**.080** 2.03	Gold/Nickel[1]	201511-1	201512-1	328667	69373	69186-2
24-22	0.2-0.4 (Stranded)	**.115** 2.92	Gold/Nickel[1]	201143-5	201144-5	328666	69672	45638-3
			Gold/Copper[2]	201143-7	201144-7			
24-22	0.2-0.4 (Solid or Stranded)	**.160** 4.06	Gold/Nickel[1]	50079-1	50080-1	329029	69222-2	45639-2

Selection Chart for Shielded Wire

Shielded Wire AWG	Shielded Wire No.	Contact Finish	Loose Piece Contact Part Numbers		Ferrule Part Numbers	Tooling Part Numbers	
			Pin	Socket		Die Inserts for Hand Tool 69710-1 or Pneumatic Tool*	Hand Tool
22	NAS-702, Class A	Gold/Nickel[1]	—	201144-3	328666	69227-2	45638-2
22	MIL-C-7078A, Type II						
22	NAS-702, Class B	Gold/Nickel[1]	201145-4	201146-4	328663	69220-2	45740-2
		Gold/Copper[2]	—	201146-9			

Selection Chart for Various Manufacturers' Cables

Cable Size AWG/Type	Cable Size [mm²]	Dielectric O.D. (Max.)	Cable O.D. Range	Braid	Contact Finish	Loose Piece Contact Part Numbers		Ferrule Part Numbers	Tooling Part Numbers	
						Pin	Socket		Die Inserts for Hand Tool 69710-1 or Pneumatic Tool*	Hand Tool
Brand Rex T209A 29 AWG	0.08	**.076** 1.93	**.112-.122** 2.84-3.10	Single	Gold/Nickel[1]	—	201146-6	330587	—	69360-2
Brand Rex T5788A 26 AWG	0.12-0.15	**.106** 2.69	**.160** 4.06	Single	Gold/Nickel[1]	201145-2	201146-2	328664	69222-2	45639-2
					Gold/Copper[2]	1-201145-0	1-201146-0			
Raychem 0030D1314 Army Ord. 11207177 32-26 AWG	0.03-0.15	**.129** 3.28	**.122-.137** 3.10-3.48	Single	Gold/Nickel[1]	—	201146-6	330587	—	69360-2

[1] .000030 [0.00076] gold over .000030 [0.00076] nickel.
[2] .000100 [0.00254] gold over .000100 [0.00254] copper.
* Use hand actuated Power Unit **Part Number** 189721-2 or foot actuated Power Unit **Part Number** 189722-2. Both units require "C" Head Die Set Adapter **Part Number** 318161-1 and an Adapter Holder **Part Number** 356304-1 (with ratchet) or **Part Number** 189928-1 (without ratchet). Request Catalog 124208 for more information on the 626 Pneumatic Tool System.

Note: A ferrule and retention spring (**201142-2**) are required for each pin and socket.

For complete product information, order Catalog 65910

Products for Industrial & Commercial Applications
Dimensions are shown for reference purposes only.
Dimensions are in inches and millimeters unless otherwise specified. Values in brackets are metric equivalents.
Specifications subject to change.
Technical Support Center 1-800-522-6752 www.tycoelectronics.com

Introduction

Product Facts

- Lightweight, all-plastic and metal-shell connectors
- CPC connectors are UL 94V-0 rated and made of stabilized, heat resistant, self-extinguishing thermoplastic material
- Metal-shell CPC connector housings made of UL 94V-0 rated thermoplastic
- Operating temperature range: -55°C to +125°C
- Available in panel or chassis mount and free-hanging configurations
- Quick connect/disconnect capability with thread assist, positive detent coupling
- Built-in pin and socket protection
- Polarized for proper mating of connector halves
- Special connector configurations offer special solder and posted contacts, special receptacles with or without threaded inserts
- Full complement of optional accessories
- Recognized under the Component Program of Underwriters Laboratories Inc. , for 250 VAC, rms or 250 VDC, Service‡; Series 1 and Series 3 (600 V); Series 2, Series 4, Series 5 and Series 6 (250 V) File No. E28476
- Certified by Canadian Standards Association, File No. LR 7189
- Produced under a Quality Management System certified to ISO 9001

  A copy of the certificate is available upon request.
- Certain products meet VDE Standard 0627

‡Select connectors are recognized for 600 volts service.

Six connector series for different interconnection requirements:

- Series 1—Standard density, signal and low-current applications using durable Multimate contacts (.062 [1.57] pin diameter)
- Series 2—High density applications using Size 20 DM and 20 DF contacts (.040 [1.02] pin diameter)
- Series 3—Low density, power applications with Type XII contacts capable of carrying up to 35 amperes of current
- Series 4—Combination of standard and power density application with Type III+ and Type XII contacts
- Series 5—Power density application with Size 8 screw machined and precision formed contacts
- Series 6—Combination of standard and power density application with Type III+ and Size 8 contacts

MIL-C-5015 Style Circular Plastic Connectors (CPC)

Product Facts

- Intermateable with Metal-Shell sizes 20-14 and 18-10, MIL-C-5015 Style connectors
- High impact resistant plastic housing made of UL 94V-0 rated material
- Lightweight
- Lower cost than standard MIL-C-5015 connectors
- Industry accepted Type III+ pin and socket contacts, available on reels in strip form for high volume, low cost, automatic machine terminations, or in loose piece form for low volume, prototype or maintenance and repair
- Improved alignment (U.S. Standard MIL-C-5015 Connectors) prevents mismating with other housing insert arrangements
- Recognized under the Component Program of Underwriters Laboratories Inc., File No. E28476
- Certified by Canadian Standards Association, File No. LR 7189

Technical Documents:

Product Specifications
describe technical performance characteristics and verification tests. They are intended for the Design, Component and Quality Engineer.

108-1579 Sealed CPC Connectors with Removable Contacts
108-10024 CPC Connectors
108-10037 Contacts, Type XII
108-10040 Metal-Shell CPC Connectors
108-10042 Contacts, Type III+
108-40005 Contacts, Size 20 DF

Application Specifications
describe requirements for using the product in its intended application and/or crimping information. They are intended for the Packaging and Design Engineer and the Machine Setup Person.

114-10000 Contacts, Size 20 DF
114-10004 Contacts, Type III +
114-10005 Contacts, Type XII
114-10038 CPC Connectors

Instruction Sheets
provide instructions for assembling or applying the product. They are intended for the Manufacturing Assembler or Operator.

408-4317 Two-Piece Sealed CPC Connectors
408-6641 Metal-Shell CPC Connectors
408-7582 Accessories for CPC Connectors
408-7593 CPC Connectors
408-7901 Application and Maintenance for AMP Hand Crimp Tool

Application Tooling/Instruction Sheet Cross Reference

Tool Part Number	Instruction Sheet
58495-1	408-9819
69710-1	408-2095
90310-1	408-7680
90310-2	408-7942
90310-3	408-9387
90363-1	408-7901
91019-3	408-7276
91067-2	408-7508
91136-1	408-7859
91285-1	408-9404
305183	408-1216
318813-1	408-4374

For complete product information, order Catalog 82021

Products for Industrial & Commercial Applications

Dimensions are shown for reference purposes only.

Dimensions are in inches and millimeters unless otherwise specified. Values in brackets are metric equivalents.

Specifications subject to change.

Technical Support Center
1-800-522-6752
www.tycoelectronics.com

Connector Series and Types

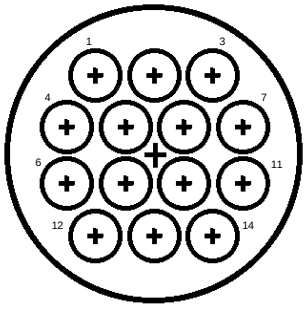

Series 1—Size 16 Contacts

Series 1 connectors permit the use of multiple combinations of signal and coaxial circuits in the same housing by accepting durable Multimate contacts. These pin and socket contacts include Type III+ and subminiature coaxial contacts, interchangeable in the same Multimate contact cavity. Type III+ contacts (.062 [1.57] pin diameter) are capable of carrying a maximum of 13 amperes when crimped in wire. Type III solder contacts and posted contacts for pc board applications are also available. Many connector arrangements offer both standard and reverse sex contact loading—**from 4 thru 37 positions.**

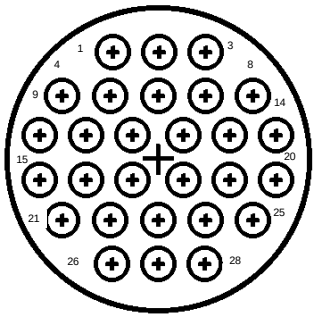

Series 2—Size 20 Contacts

Series 2 connectors accept Size 20 DF (precision formed) and Size 20 DM (screw-machined) pin and socket contacts with a .040 [1.02] pin diameter, Size 20 DF contacts are available in crimp and solder versions, as well as a posted version for wrap-type and pc board applications. Maximum current carrying capability is 7.5 amperes. Many connector arrangements offer both standard and reverse sex contact loading—**from 8 thru 63 positions.**

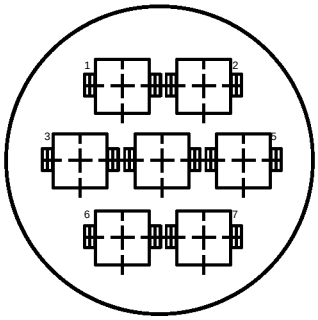

Series 3—Power Contacts

Series 3 connectors accept Type XII power contacts which can carry up to 25 amps per contact. These contacts will accommodate a wire size range of 16 to 10 AWG [1.4 to 5 mm^2]. Two connector sizes are available in both standard and reverse sex connector arrangements **3 and 7 positions.**

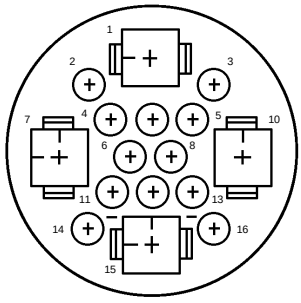

Series 4—Combination Size 16 and Power Contacts

Series 4 connectors accept Size 16 Multimate and Type XII power contacts, combining the signal and coaxial circuit capabilities of Series 1 connectors with the power circuit capabilities of Series 3 connectors. Available in two connector sizes offering power mixing combinations totaling **16 and 22 positions.**

For complete product information, order Catalog 82021

Products for Industrial & Commercial Applications
Dimensions are shown for reference purposes only.
Dimensions are in inches and millimeters unless otherwise specified. Values in brackets are metric equivalents.
Specifications subject to change.
Technical Support Center
1-800-522-6752
www.tycoelectronics.com

Connector Series and Types

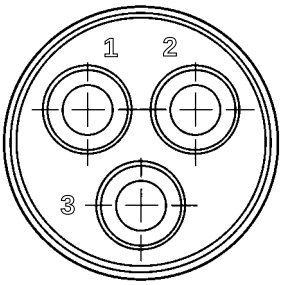

Series 5—Power Contacts .125 POWERBAND

Series 5 connectors combine the revolutionary performance of the new AMP POWERBAND, high current contact in configurations similar to the Series 3 connectors. AMP POWERBAND contacts offer the electrical performance of the best Mil Spec Size 8 screw-machined contacts with the economy and productivity of strip-fed, precision formed contacts.

Series 5 connectors are environmentally sealable to meet IEC IP 65 and IP 67 specifications.

Rated at 600 VAC or VDC, 45 amperes maximum in a single contact, the connectors are available in free-hanging and panel-mount applications—**one connector configuration containing three .125 POWERBAND contacts.**

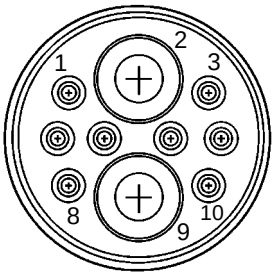

Series 6—Combination, Size 16 and .125 POWERBAND Contacts

Series 6 combines the high current and environmental sealing capability of Series 5, POWERBAND contacts, and the reliability of signal carrying, low current Type III+ contacts.

This combination of power and signal contacts is offered in **one connector configuration containing two .125 POWERBAND contacts and eight Type III+ signal pin and socket contacts.**

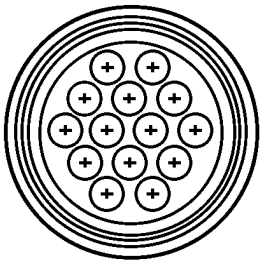

MIL-C-5015 Style—Size 16 Contacts

This new addition to the AMP Circular Plastic Connector Line is specifically designed to be **intermateable with Metal-Shell size 20-14 and 18-10, MIL-C-5015 Style connector systems.** The high impact resistant plastic housing offers the advantages of light weight and lower cost than existing metal-shell connectors. In addition the connector design prevents mismating when used with other insert arrangements. As part of the AMP Multimate family of connectors, the MIL-C-5015 style connector offers the economies of crimp Type III+ pin and socket contacts in reel-mounted, strip-form for high volume automatic machine termination, as well as in loose piece-form for low volume, prototype or maintenance and repair.

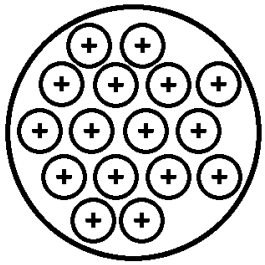

Metal-Shell, Circular Plastic Connectors

Metal-Shell CPC connectors consist of a black thermoplastic insert in a nickel-plated, zinc alloy shell. These connectors are currently available in **shell sizes 14, 22 and 28, and in two basic configurations consisting of plugs and square flange receptacles.**

Performance Characteristics—CPC and Metal-Shell CPC Connectors

More information on the performance of AMP CPC and metal-shell CPC connectors is available by requesting the following AMP Product Specifications:

108-10024—
CPC Connectors
108-10037—
Type XII Contacts
108-10020—
Size 20 DM and 20 DF Contacts
108-10040—
Metal-Shell CPC Connectors
108-10042—
Type III+ Contacts
108-1579—
Sealed CPC Connectors with Removeable Contacts

Test Description	Procedure	Requirements
Maintenance Aging	Contacts removed and reinserted 10 times using applicable tools	No damage to contacts or housings. Contact retention maintained
Contact Retention	Axial load applied to contact to displace to the rear of the connector	Contacts remain in place when subjected to a minimum 10 lb. load*
Dielectric Withstanding Voltage (MIL-STD-1344, Method 3001)	Connectors subjected to 1500 volts rms at sea level	No breakdown or flashover
Thermal Shock	Connectors subjected to five cycles of temperature change (-55°C and +125°C)	No damage
Vibration (MIL-STD-202, Method 204, Test Condition B)	Connectors vibrated (wired and mated). Contacts wired in series with 100 milliamperes flowing during the test	No damage or loosening of parts. No interruption of electrical continuity longer than 10 microseconds
Physical Shock (MIL-STD-202, Method 213A, Test Condition A)	Connectors shocked 50 G (wired and mated). Contacts wired in series with 100 milliamperes flowing during the test	No damage or loosening of parts. No interruption of electrical continuity longer than 10 microseconds
Durability	Connectors mated and unmated 25 times with tin plated contacts and 500 times with gold plated contacts	No wear through damage to plating
Corrosion (Salt Spray) (MIL-STD-202, Method 101, Test Condition B)	Mated connectors subjected to 5% salt spray for 48 hours	No damage
Protection Against Solids	a. Test wire is pushed into mated connectors b. Mated connectors subjected to circulating talcum powder	a. Must not touch live parts b. No dust deposits observed on mating surfaces
Protection Against Water	Water is projected through jets against mated connector from any direction and then temporarily immersed in water	No water deposits shall be observed on mating surfaces of contacts or housings
Temperature Life	Mated connectors subjected to a temperature of +125°C for 200 hours	No damage
Insulation Resistance (MIL-STD-1344, Method 3003)	Measurement made between adjacent contacts with connector mated	5000 megohms minimum ambient temperature
Humidity (MIL-STD-202, Method 103, Test Condition B)	Mated connectors subjected to 10 days moisture test	Minimum insulation resistance of 100 megohms

*For size 16 contacts. Size 8 contacts 25 lb. load, min.

For complete product information, order Catalog 82021

Products for Industrial & Commercial Applications
Dimensions are shown for reference purposes only.
Dimensions are in inches and millimeters unless otherwise specified. Values in brackets are metric equivalents.
Specifications subject to change.
Technical Support Center
1-800-522-6752
www.tycoelectronics.com

Levels of Protection for Electric Operating Material According to IEC 60529 and IEC 60947, Appendix C

Environmentally Protected Circular Plastic Connectors, for Mated CPC Connectors Utilizing Peripheral Seals and either Wire Entry Seals (for Discrete Wire Applications) or Heat Shrink Boots (for Jacketed Cable Applications). Available are Various Sizes, Series 1, 5 and 6.

Internal Protection (IP) Definition:

- **Per IEC 60947, Appendix C**—Pertains to low voltage switchgear and control gear.
- **Per IEC 60529**—Pertains to degrees of protection provided by enclosures (IP code).

Sample Designation:

(Where x is a numeral value), i.e. IP 65

Connector/Contact Acceptability

As previously stated, choosing the appropriate connector/contact combination is fundamental to the successful function of all connectors. The Selector Chart, shown at right, is designed to simplify your choice of connectors and their acceptable contacts. Once you have selected the wire size, current-carrying capacity need, number of positions required, and the type of contacts needed in your choice of connector, refer to this matrix for a quick look at exactly what is acceptable in a given connector type.

Contact Selector Chart

Connector Type	20 DF	Type I	Type II	Type III+	Posted Type III+	Type XII	Sub-Mini Coax	POWERBAND
CPC Series 1			✔	✔	✔		✔	
CPC Series 2	✔							
CPC Series 3						✔		
CPC Series 4			✔	✔		✔	✔	
CPC Series 5								✔
CPC Series 6		✔	✔	✔				✔
CPC 5015				✔				
CMC Series 1			✔	✔	✔		✔	
CMC Series 2	✔							
CMC Series 3						✔		
CMC Series 4			✔	✔		✔	✔	

Circular Plastic Connectors, Series 1

CPC Connectors, Series 1 for Cable or Panel Mount

(Accepts Type III+, High-Current Power, Type II and Subminiature Coax Contacts)



Listed part numbers are for connectors only; **contacts must be ordered separately.**

Material:

Housing—Thermoplastic, 94V-0 rated, black (unless noted otherwise)

Related Product Data:

Contacts—Pages 9101-9103, 9105, 9109, 9116, 9117

Contact Arrangements—Page 9129

Component Dimensions—Page 9130

Accessories—Pages 9139 thru 9142, 9151, 9152

Performance Characteristics—Page 9122

Technical Documents: Page 9119

Replacement Coupling Rings

Shell Size	Part Numbers
11	213811-1
13	213813-1
17	213810-1
23	213812-1

Keying

Molded-in keying in two configurations:

A—Standard Configuration: 5 Keys



B—Optional Configuration: 4 Keys to prevent mismating of standard and reverse sex.



For complete product information, order Catalog 82021

Square Flange Receptacle

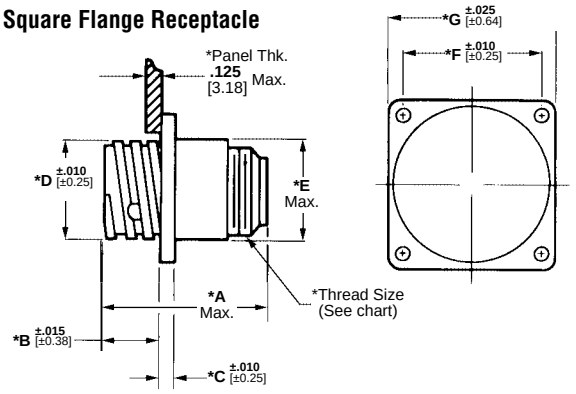

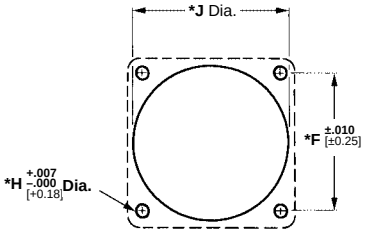

Panel Cutout

Free-Hanging Receptacle

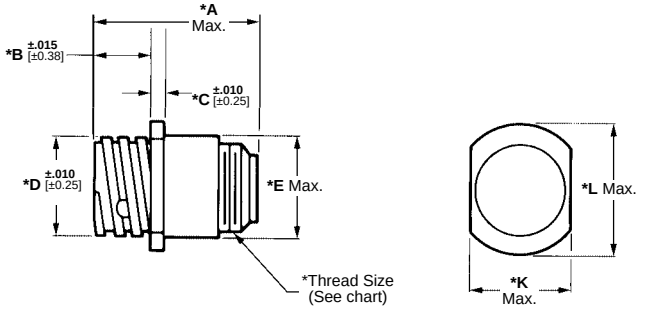

***Note:**
See page 9130 for callout dimensions

Plug

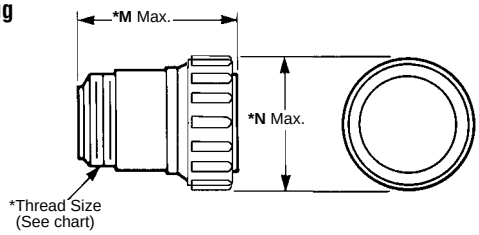

Standard Sex Connectors (Receptacles accept pin contacts, Plugs accept socket contacts)

Arrangement	Keying	Square Flange Receptacle		Free-Hanging Receptacle	Plug
		With Threaded Inserts[1]	With Mounting Holes		
11-4	A	208130-1	206061-1	206153-1	206060-1
13-9	A	208131-1	206705-1	206705-2	206708-1
17-16	A	206036-8	206036-1	206036-3	206037-1
	B	—	213862-1	—	213849-1
23-24	A	211839-1	206838-1	206838-2	206837-1
	B	—	213866-1	—	213851-1
23-37	A	787610-1	206151-1	206151-2	206150-1
	B	—	213860-1	—	213848-1

[1] Four 4-40 threaded inserts per receptacle.

Reverse Sex Connectors (Receptacles accept socket contacts, Plugs accept pin contacts)

Arrangement	Keying	Square Flange Receptacle		Free-Hanging Receptacle	Plug
		With Threaded Inserts[1]	With Mounting Holes		
11-4	A	211102-1	206430-1 211908-1[2]	206430-2	206429-1 211882-1[3]
17-14	A	211103-1	206043-1	206043-3	206044-1
	B	—	796437-2	—	796449-1
23-37	A	206306-5	206306-1	206306-2	206305-1
	B	—	213864-1	—	213850-1

[1] Four 4-40 threaded inserts per receptacle.
[2] Material—Polyester, gray
[3] Material—Thermoplastic, gray

Products for Industrial & Commercial Applications
Dimensions are shown for reference purposes only.
Dimensions are in inches and millimeters unless otherwise specified. Values in brackets are metric equivalents.
Specifications subject to change.
Technical Support Center
1-800-522-6752
www.tycoelectronics.com

Circular Plastic Connectors, Series 1, VDE Tested

CPC Connectors, Series 1, for Cable or Panel Mount
(Accepts Type III+, High-Current Power, Type II and Subminiature Coax Contacts)



Product Facts

- **Designed to meet requirements of VDE as shown in DIN Specification 57627**
- **Recognized under the Component Program of Underwriters Laboratories Inc. for 600 VAC and 600 VDC service, File No. E28476**
- **Certified by Canadian Standards Association, File No. LR 7189**

Listed part numbers are for connectors only; **contacts must be ordered separately.**

Material:

Housing—Thermoplastic, 94V-0 rated, black

Related Product Data:

Contacts—Pages 9101-9103, 9105, 9109, 9116, 9117
Contact Arrangements—Page 9129
Component Dimensions—Page 9130
Accessories—Pages 9139 thru 9142, 9151, 9152
Performance Characteristics—Page 9122

Technical Documents: Page 9119

Replacement Coupling Rings

Shell Size	Part Numbers
13	213813-1
17	213810-1
23	213812-1

Keying

A—Standard Configuration: 5 Keys
B—Optional Configuration: 4 Keys

Square Flange Receptacle

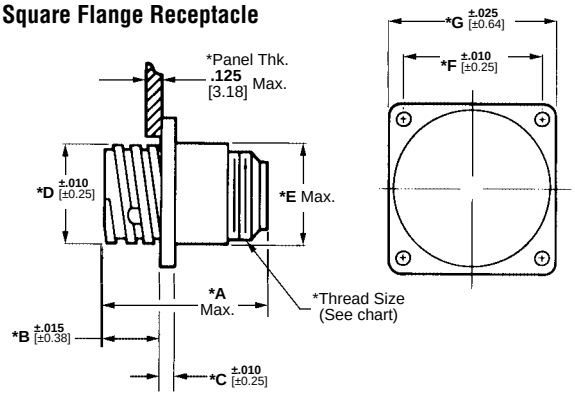

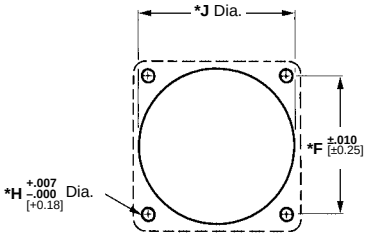

Panel Cutout

Free-Hanging Receptacle

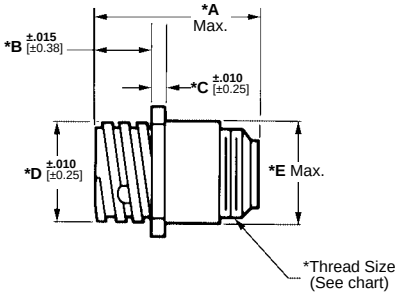

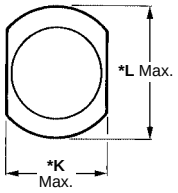

***Note:**
See page 9130 for callout dimensions

Plug

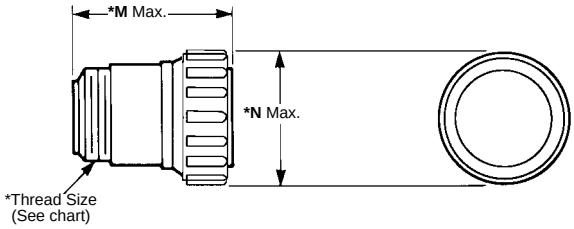

Standard Sex Connectors (Receptacles accept pin contacts, Plugs accept socket contacts)

Arrangement	Keying	Square Flange Receptacle		Plug
		With Threaded Inserts[1]	With Mounting Holes	
13-7	A	211401-4	211401-1	211399-1
17-9	A	211767-2	211767-1	211766-1
23-19	A	211771-2	211771-1	211770-2
	B	—	213870-1	213853-1

[1] Four 4-40 threaded inserts per receptacle.

Reverse Sex Connectors (Receptacles accept socket contacts, Plugs accept pin contacts)

Arrangement	Keying	Square Flange Receptacle		Free-Hanging Receptacle	Plug
		With Threaded Inserts[1]	With Mounting Holes		
13-7	A	211398-4	211398-1	211398-2	211400-1
17-9	A	—	211769-1	211769-3	211768-1
	B	—	796439-2	—	796450-1
23-19	A	—	211773-1	—	211772-1
	B	—	213868-1	—	213852-1

[1] Four 4-40 threaded inserts per receptacle.
Key Style "A" is the Standard 5 Locating Key arrangement. Key Style "B" is the 4 Locating Key arrangement.

For complete product information, order Catalog 82021

Products for Industrial & Commercial Applications
Dimensions are shown for reference purposes only.
Dimensions are in inches and millimeters unless otherwise specified. Values in brackets are metric equivalents.
Specifications subject to change.
Technical Support Center
1-800-522-6752
www.tycoelectronics.com

Circular Plastic Connectors, Series 1

Square Flange Receptacles, Printed Circuit Board Mount

with .025 [0.64] sq. solder tails



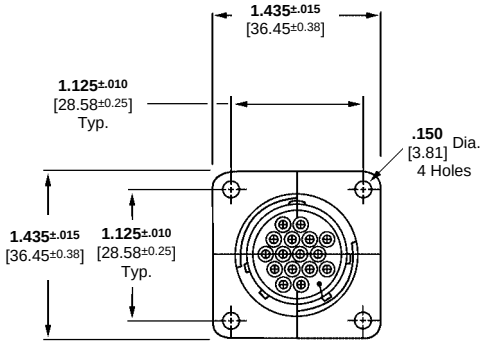

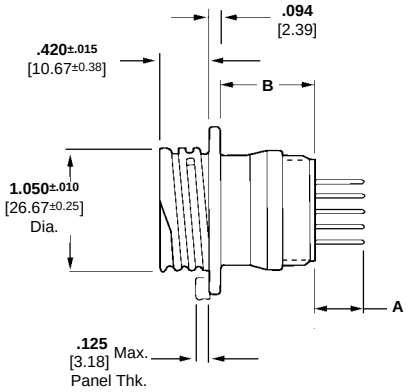

Material and Finish:

Housing—Thermoplastic, 94V-0 rated, black

Contacts—

A—Duplex plated gold flash on entire contact with .000030 [0.00076] min. gold on contact engagement area, tin-lead on the termination area

C—Plated tin on the entire contact, tin-lead on the termination area

Related Product Data:

Contact Arrangements—Page 9129

Performance Characteristics—Page 9122

Technical Documents: Page 9119

Keying

Molded-in keying in two configurations:

A—Standard Configuration: 5 Keys



B—Optional Configuration: 4 Keys to prevent mismating of standard and reverse sex.



Other Available Posted Contacts

Tyco Electronics can make available contacts with various solder tail lengths for loading into the standard or reverse sex, square flange receptacles for applications requiring custom solder tail lengths.

Standard Sex (Posted Pin Contacts)

Arrangement No.	Receptacle Assemblies		Keying Style	Dimensions		Contact Finish Code	Peripheral Seal
	Mounting Holes	4-40 Threaded Inserts		A	B		
11-4	—	207825-1	A	**.119** 3.02	**.816** 20.73	A	N
13-7		796433-1	A	**.220** 5.59	**.816** 20.73	A	N
13-9	208223-1	—	A	**.220** 5.59	**.816** 20.73	A	N
	—	208223-3	A	**.220** 5.59	**.816** 20.73	A	N
17-16	207303-1	1-207303-1	A	**.220** 5.59	**.816** 20.73	C	N
	207303-3	—	A	**.220** 5.59	**.816** 20.73	A	N
	213855-1	213855-2	B				
23-19	213782-1	—	A	**.429** 10.90	**.679** 17.24	A	N
	213859-1	—	B	**.618** 15.70	**.674** 17.12	A	N
23-24	—	213588-1	A	**.220** 5.59	**.654** 16.61	C	N
	213798-1	—	A	**.618** 15.70	**.679** 17.24	A	N
	213780-1	—	A	**.220** 5.59	**.536** 13.61	A	N
	213857-1	—	B	**.429** 10.90	**.679** 17.24	A	N
23-37	206934-1	—	A	**.220** 5.59	**.654** 16.61	A	N
	206934-5	—	A	**.119** 3.02	**.654** 16.61	A	N
	—	206934-9					Y
	208132-1	—	A	**.429** 10.90	**.654** 16.61	C	N
	206934-6	—	A			A	
	213854-1	—	B			A	
	206934-7	—	A	**.618** 15.70	**.654** 16.61	A	N

Note: Posts are .017 [0.43] offset from centerline of contacts. All posts must be oriented in the same plane for proper contact/post location.

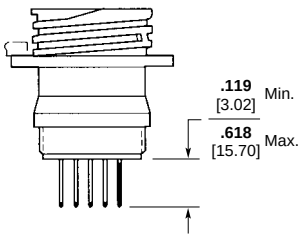

For complete product information, order Catalog 82021

Products for Industrial & Commercial Applications
Dimensions are shown for reference purposes only.
Dimensions are in inches and millimeters unless otherwise specified. Values in brackets are metric equivalents.
Specifications subject to change.
Technical Support Center
1-800-522-6752
www.tycoelectronics.com

Circular Plastic Connectors, Series 1

Square Flange Receptacles, Printed Circuit Board Mount

with .025 [0.64] sq. solder tails

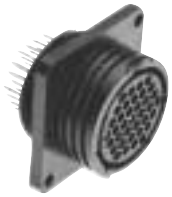

Material and Finish:

Housing—Thermoplastic, 94V-0 rated, black

Contacts—

A—Duplex plated gold flash on entire contact with .000030 [0.00076] min. gold on contact engagement area, tin-lead on the termination area

C—Plated tin on the entire contact, tin-lead on the termination area

Related Product Data:

Contact Arrangements—Page 9129

Performance Characteristics—Page 9122

Technical Documents: Page 9119

Keying—Page 9126

Special CPC Connectors, Square Flange Receptacles, Printed Circuit Board Mount With Round Posted Contacts (Size 16), Contact Arrangement 17-16



Material and Finish:

Housing—Thermoplastic, 94V-0 rated, heat-stabilized, fire-resistant, self-extinguishing, black

Contacts—Brass

Plating—

Connector Part Number 207292-1 **(.125 Post Length) or** 207292-3 **(.175 Post Length)**—Plated tin over .000050 [0.00127] min. nickel on entire contact

Connector Part Number 207292-2 **(.125 Post Length)**—Plated .000030 [0.00076] min. gold over .000050 [0.00127] min. nickel on entire contact

Notes: 1. Connector can be used for pressure bulkhead feed-thru (sealed) applications.
2. Receptacle is standard sex, supplied preloaded with 16 special round posted pin contacts, .030 [0.76] diameter.

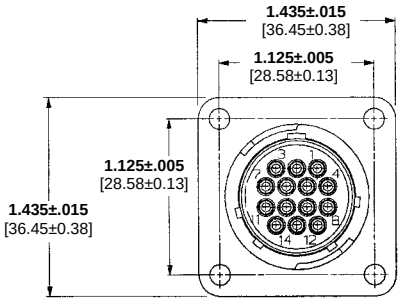

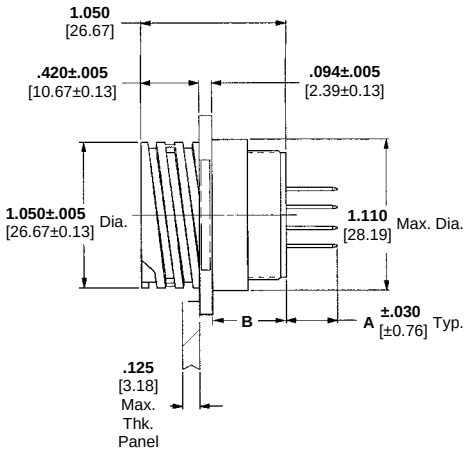

Reverse Sex (Posted Socket Contacts)

Arrangement No.	Receptacle Assemblies: Mounting Holes	Receptacle Assemblies: 4-40 Threaded Inserts	Keying Style	Dimensions: A	Dimensions: B	Contact Finish Code	Peripheral Seal
11-4	208283-1	—	A	**.159** 4.04	**.536** 13.61	A	N
	788130-1	—	A	**.704** 17.88	**.541** 13.74	C	N
17-9	213826-1	—	A	**.220** 5.59	**.536** 13.61	C	Y
17-14	213729-1	213729-2	A	**.368** 9.35	**.536** 13.61	A	N
	213825-1	—	A	**.220** 5.59	**.536** 13.61	C	Y
	—	213729-4	A	**.159** 4.04	**.536** 13.61	C	N
23-19	213858-1	—	B	**.645** 16.38	**.394** 10.00	A	N
	213781-1	—	A	**.557** 14.15	**.374** 9.50	C	N
	213827-1	—	A	**.368** 9.35	**.374** 9.50	C	Y
23-37	208224-1	—	A	**.557** 14.15	**.374** 9.50	A	N
	213856-1	—	B				
	208224-2	—	A	**.368** 9.35	**.374** 9.50	C	N
	213828-1	—	A	**.368** 9.35	**.374** 9.50	C	Y
	207890-1	—	A	**.159** 4.04	**.374** 9.50	A	N

Note: Posts are .017 [0.43] offset from centerline of contacts. All posts must be oriented in the same plane for proper contact/post location.

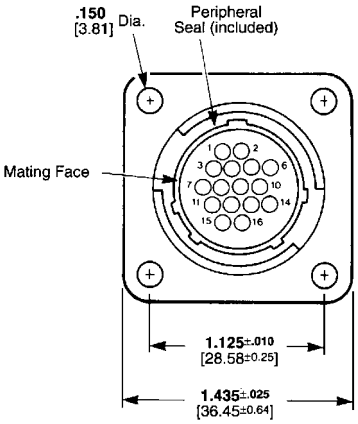

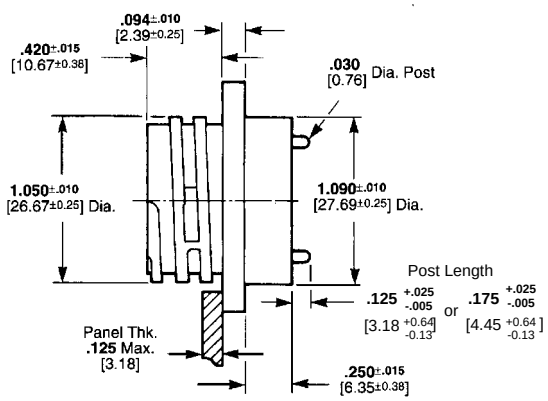

For complete product information, order Catalog 82021

Circular Plastic Connectors, Series 1

Special CPC Connectors, Square Flange Receptacles, With Solder Type Contacts (Size 16), Contact Arrangement 17-16



Material and Finish:

Housing—Thermoplastic, 94V-0 rated, heat-stabilized, fire-resistant, self-extinguishing, black

Contacts—Brass

Plating—

Connector Part Number 206404-1
Plated .000030 [0.00076] min. gold over .000030 [0.00076] min. nickel on entire contact

Connector Part Number 206404-2
Plated tin over .000100 [0.00254] min. copper on entire contact

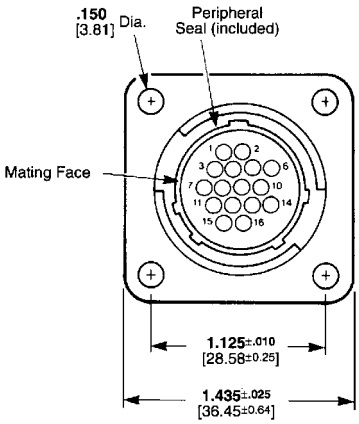

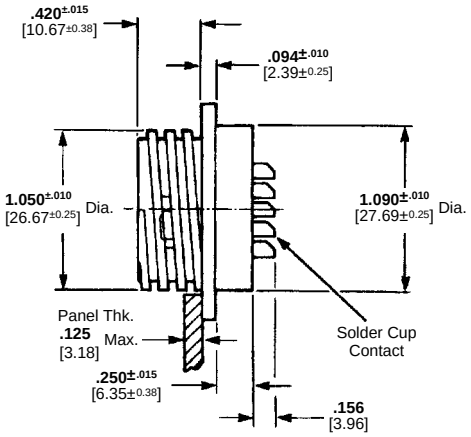

Notes: 1. Connector can be used for pressure bulkhead feed-thru (sealed) applications.
2. Receptacle is standard sex, supplied preloaded with 16 special solder cup pin contacts.

Special CPC Connectors, Feed-Thru

Pressure Rating up to 30 psi



Material and Finish:

Housing—Thermoplastic, 94V-0 rated, black

Contacts—Copper alloy, gold over nickel plated

Note: Feed-Thru Receptacles are fully loaded with Size 16, feed-thru pin contacts. Order Size 16 crimp, snap-in socket contacts for plugs separately.

Receptacle, Feed-Thru

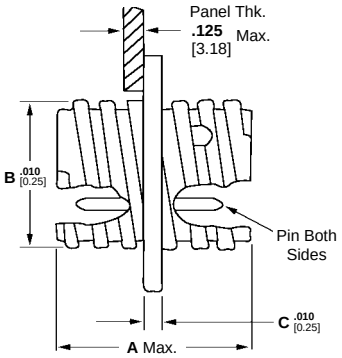

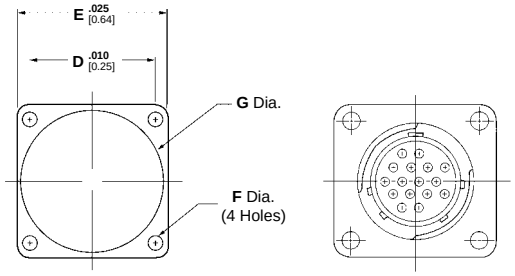

Panel Cutout

Plug

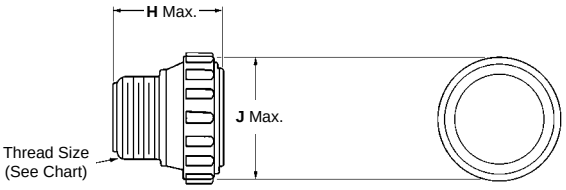

Part Numbers

Arrangement	Standard Numbering Plug	Reverse Numbering Plug	Feed-Thru Receptacle
11-4	206060-1	206516-1	206518-2
17-16	206037-1	206554-1	206552-1

Dimensions

Arrangement	Dimensions									Thread Size
	A	B	C	D	E	F	G	H	J	
11-4	**1.209** 30.71	**.687** 17.45	**.094** 2.39	**.844** 21.44	**1.125** 28.58	**.125** 3.18	**.840** 21.34	**1.080** 27.43	**.975** 24.77	5/8-24 UNEF-2A
17-16	**1.209** 30.71	**1.050** 26.67	**.094** 2.39	**1.125** 28.58	**1.435** 36.45	**.150** 3.81	**1.210** 30.73	**1.080** 27.43	**1.349** 34.26	15/16-20 UNEF-2A

For complete product information, order Catalog 82021

Products for Industrial & Commercial Applications
Dimensions are shown for reference purposes only.
Dimensions are in inches and millimeters unless otherwise specified. Values in brackets are metric equivalents.
Specifications subject to change.
Technical Support Center
1-800-522-6752
www.tycoelectronics.com

Contact Arrangements, Series 1

Shell Sizes 11 and 13

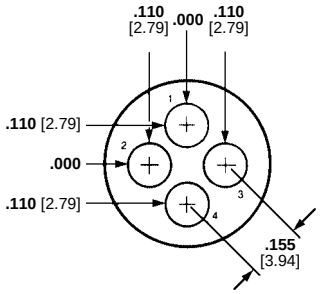

Arrangement 11-4
Max. Wire Ins. Dia. = .100 [2.54]

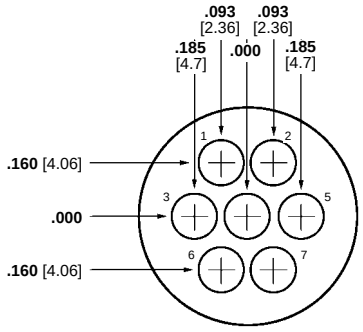

Arrangement 13-7
Max. Wire Ins. Dia. = .100 [2.54]

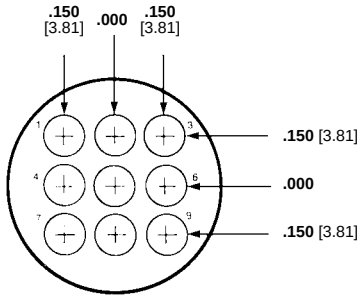

Arrangement 13-9
Max. Wire Ins. Dia. = .100 [2.54]

Shell Size 17

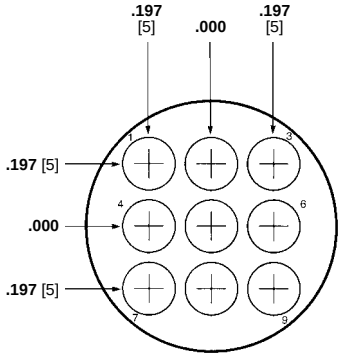

Arrangement 17-9
Max. Wire Ins. Dia. = .150 [3.81]

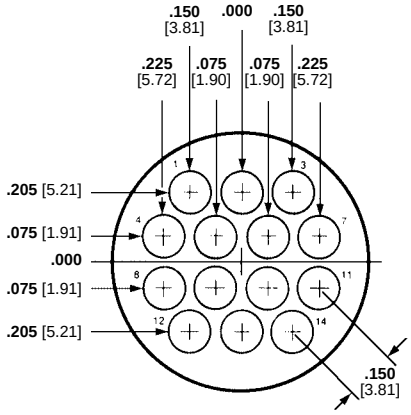

Arrangement 17-14
Max. Wire Ins. Dia. = .100 [2.54]

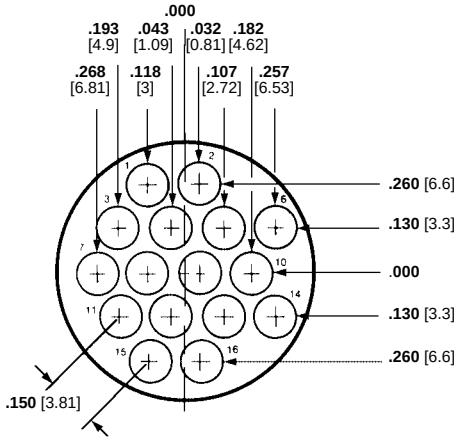

Arrangement 17-16
Max. Wire Ins. Dia. = .100 [2.54]

Shell Size 23

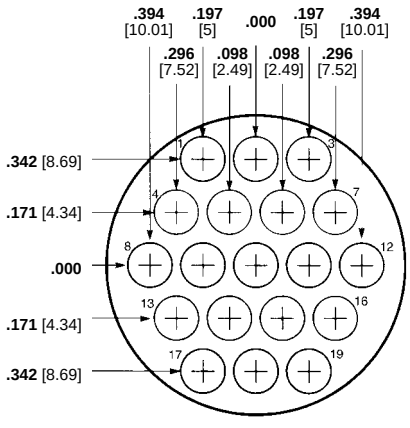

Arrangement 23-19
Max. Wire Ins. Dia. = .150 [3.81]

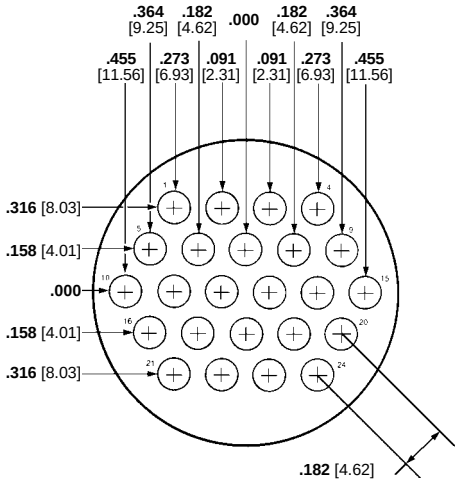

Arrangement 23-24
Max. Wire Ins. Dia. = .150 [3.81]

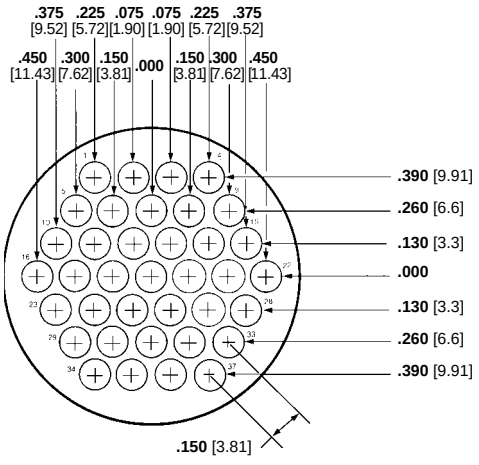

Arrangement 23-37
Max. Wire Ins. Dia. = .100 [2.54]

Note: Contact arrangements shown are for pin mating face (plug or receptacle). Socket mating face is mirror image.

For complete product information, order Catalog 82021

Component Dimensions, Series 1

Square Flange Receptacle

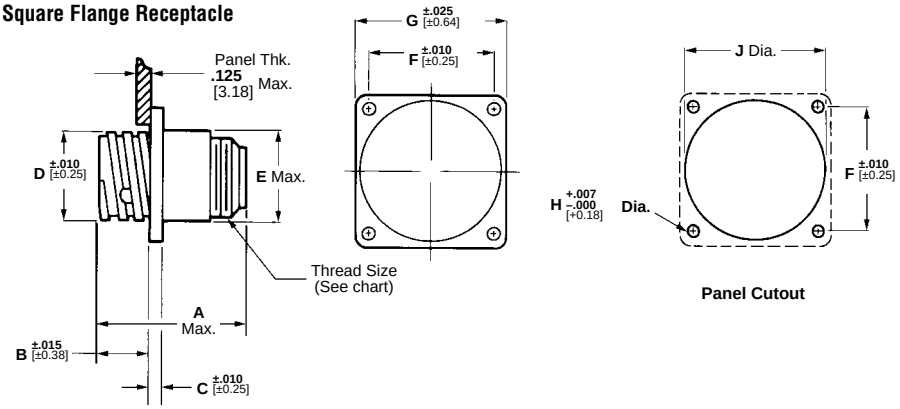

Free-Hanging Receptacle

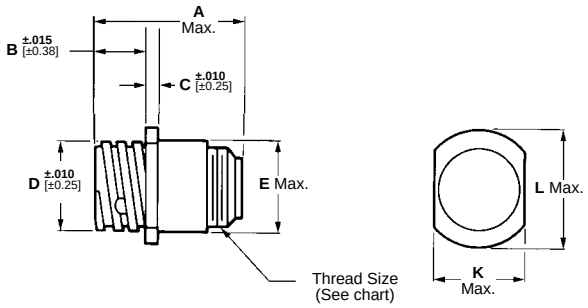

Plug

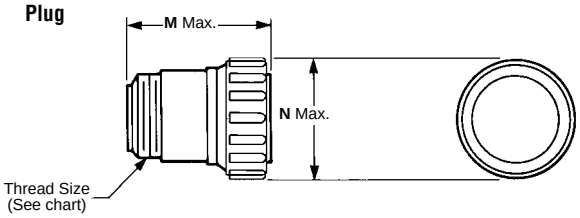

Shell Size	Sex	Dimensions													Thread Size
		A	B	C	D	E	F	G	H	J	K	L	M	N	
11	Rev.	**1.070** 27.18	**.420** 10.67	**.094** 2.39	**.687** 17.45	**.740** 18.8	**.844** 21.44	**1.125** 28.58	**.125** 3.18	**.840** 21.34	**.817** 20.75	**.935** 23.75	**1.365** 34.67	**.975** 24.77	5/8-24 UNEF-2A
	Std.	**1.350** 34.29											**1.080** 27.43		
13	Std.	**1.350** 34.29	**.420** 10.67	**.094** 2.39	**.812** 20.62	**.879** 22.33	**.969** 24.61	**1.281** 32.54	**.125** 3.18	**.979** 24.87	**.874** 22.2	**1.072** 27.23	**1.080** 27.43	**1.105** 28.07	3/4-20 UNEF-2A
17	Rev.	**1.070** 27.18	**.420** 10.67	**.094** 2.39	**1.050** 26.67	**1.110** 28.19	**1.125** 28.58	**1.435** 36.45	**.150** 3.81	**1.210** 30.73	**1.161** 29.49	**1.310** 33.27	**1.365** 34.67	**1.349** 34.26	15/16-20 UNEF-2A
	Std.	**1.350** 34.29											**1.080** 27.43		
23	Rev.	**1.070** 27.18	**.520** 13.21	**.156** 3.96	**1.438** 36.53	**1.510** 38.35	**1.438** 36.53	**1.750** 44.45	**.150** 3.81	**1.610** 40.89	**1.505** 38.23	**1.733** 44.02	**1.365** 34.67	**1.783** 45.29	1-3/8-18 UNEF-2A
	Std.	**1.350** 34.29											**1.080** 27.43		

For complete product information, order Catalog 82021

Products for Industrial & Commercial Applications
Dimensions are shown for reference purposes only.
Dimensions are in inches and millimeters unless otherwise specified. Values in brackets are metric equivalents.
Specifications subject to change.
Technical Support Center
1-800-522-6752
www.tycoelectronics.com

Circular Plastic Connectors, Series 2

CPC Connectors, Series 2 for Cable or Panel Mount

(Accepts Size 20 DM or DF Crimp, Snap-In Contacts)



Listed part numbers are for connectors only; **contacts must be ordered separately.**

Material:

Housing—Thermoplastic, 94V-0 rated, black

Related Product Data:

Contacts— Pages 9106, 9107
Contact Arrangements—Page 9134
Component Dimensions—Page 9135
Accessories— Pages 9139 thru 9142
Performance Characteristics—Page 9122

Technical Documents: Page 9119

Square Flange Receptacle

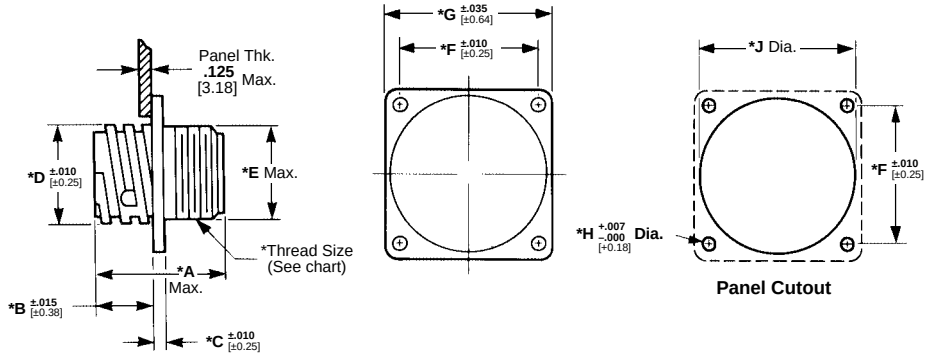

***Note:**
See page 9135 for callout dimensions

Free-Hanging Receptacle

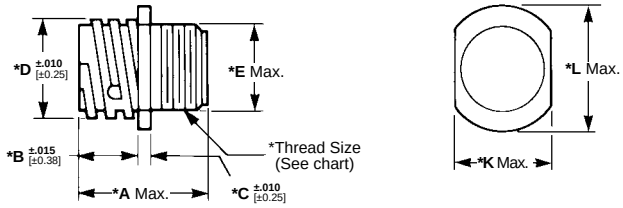

Plug

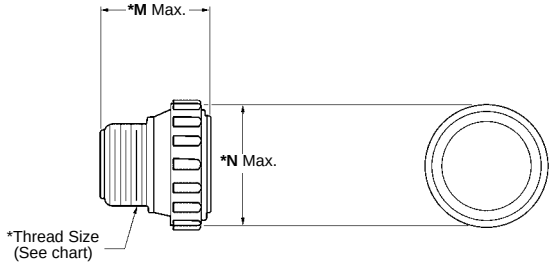

Standard Sex Connectors

(Receptacles accept Size 20 DM or DF pin contacts, Plugs accept Size 20 DM or DF socket contacts)

Arrangement	Square Flange Receptacle		Free-Hanging Receptacle	Plug
	With Mounting Holes	With Threaded Inserts[1]		
11-8	205841-1	205841-3	205841-2	205838-1
11-9	206486-1	206852-8	206486-2	206485-1
17-28	205840-3	205840-4	206152-1	205839-3
23-63	205843-1	—	205843-2	205842-1

[1] Four 4-40 threaded inserts per receptacle.

Reverse Sex Connectors

(Receptacles accept Size 20 DM or DF socket contacts, Plugs accept Size 20 DM or DF pin contacts)

Arrangement	Square Flange Receptacle		Free-Hanging Receptacle	Plug
	With Mounting Holes	With Threaded Inserts[1]		
11-8	206433-1	206433-3	206433-2	206434-1
17-28	206038-1	206038-4	206038-2	206039-1
23-57	206438-1	—	206438-2	206437-1

[1] Four 4-40 threaded inserts per receptacle.
Note: For Standard and Reverse Sex Connectors the maximum wire insulation diameter is .068 [1.73].

Replacement Coupling Rings

Shell Size	Part Numbers
11	213811-1
17	213810-1
23	213812-1

For complete product information, order Catalog 82021

Circular Plastic Connectors, Series 2

Receptacles, Printed Circuit Board Mount

with .025 [0.64] sq. solder tails



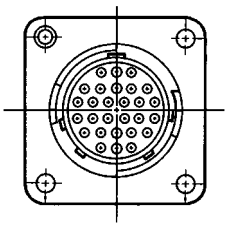

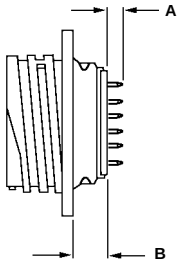

Material and Finish:

Housing—Thermoplastic, 94V-0 rated, black

Contacts—

A—Duplex plated gold flash on entire contact with .000030 [0.00076] min. gold on contact engagement area, tin-lead on the termination area, all over .000050 [0.00127] min. nickel under-plating

B—Plated gold flash on the entire contact, tin-lead on the termination area

Related Product Data:

Contact Arrangements—Page 9134

Performance Characteristics—Page 9122

Accessories — Pages 9139 thru 9142, 9151

Technical Documents: Page 9119

Standard Sex (Posted Pin Contacts)

Arrangement No.	Receptacle Assemblies		Dimensions		Contact Finish Code
	Mounting Holes	4-40 Threaded Inserts[1]	A	B	
11-9	206852-2	—	**.125** 3.18	**.230** 5.84	A
	206852-1	—	**.352** 8.94	**.230** 5.84	A
17-28	207369-1	—	**.125** 3.18	**.230** 5.84	A
	207369-3	—	**.352** 8.94	**.230** 5.84	A
23-63	206455-2	—	**.227** 5.77	**.338** 8.59	A
	206455-1	—	**.449** 11.40	**.338** 8.59	A

[1] Four 4-40 threaded inserts per receptacle.

Reverse Sex (Posted Socket Contacts)

Arrangement No.	Receptacle Assemblies		Dimensions		Contact Finish Code
	Mounting Holes	4-40 Threaded Inserts[1]	A	B	
11-8	208657-1	—	**.352** 8.94	**.285** 7.24	A
	—	208657-5	**.574** 14.58	**.230** 7.24	A
17-28	207216-2	—	**.125** 3.18	**.230** 5.84	B
	—	1-207216-1[2]	**.132** 3.35	**.270** 6.86	B
	207216-8	—	**.352** 8.94	**.230** 5.84	A
23-57	796329-1	—	**.232** 5.89	**.348** 8.84	A

[1] Four 4-40 threaded inserts per receptacle.
[2] With peripheral seal.

Other Available Posted Contacts

Tyco Electronics can make available contacts with various solder tail lengths for loading into the standard or reverse sex, square flange receptacles for applications requiring custom solder tail lengths.

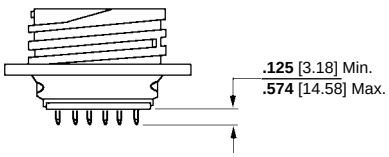

For complete product information, order Catalog 82021

Products for Industrial & Commercial Applications
Dimensions are shown for reference purposes only.
Dimensions are in inches and millimeters unless otherwise specified. Values in brackets are metric equivalents.
Specifications subject to change.
Technical Support Center
1-800-522-6752
www.tycoelectronics.com

Circular Plastic Connectors, Series 2

Special CPC Connectors, Series 2

(Pressure rated up to 30 psi)



Listed plug connector part numbers are for connectors only; **contacts must be ordered separately.**

Material:

Housing—Thermoplastic, 94V-0 rated, black

Feed-Thru Contacts—Copper alloy, plated gold over nickel

Related Product Data:

Socket Contacts (for Plugs)—Pages 9106, 9107

Contact Arrangements—Page 9134

Performance Characteristics—Page 9122

Accessories—Pages 9139 thru 9142, 9151

Technical Documents: Page 9119

Square Flange Feed-Thru Receptacles

(with Permanently Sealed .040 [1.02] Dia. Solid Pins)

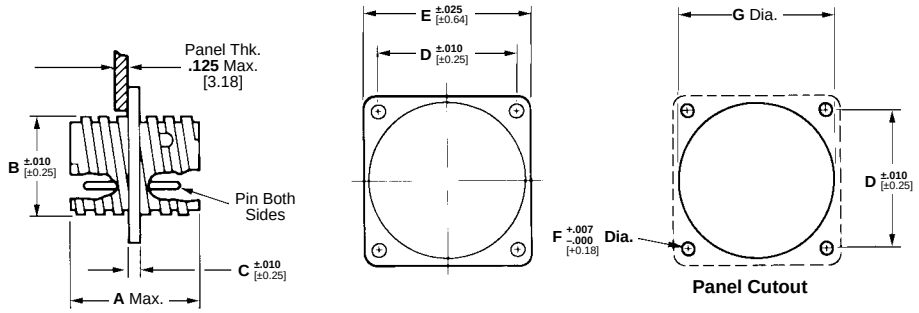

Plug

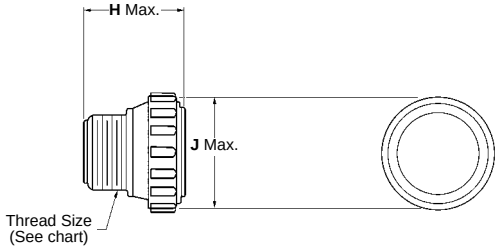

Arrangement No.	Dimensions									Thread Size
	A	B	C	D	E	F	G	H	J	
11-8	**1.035** 26.29	**.688** 17.48	**.188** 4.78	**.844** 21.44	**1.125** 28.58	**.125** 3.18	**.840** 21.34	**.800** 20.32	**.975** 24.77	5/8-24 UNEF-2A
17-28	**1.040** 26.42	**1.050** 26.67	**.188** 4.78	**1.125** 28.58	**1.435** 36.45	**.150** 3.81	**1.210** 30.73	**.800** 20.32	**1.349** 34.26	15/16-20 UNEF-2A

Part Numbers

Arrangement No.	Standard Numbering Plug	Reverse Numbering Plug	Square Flange Feed-Thru Receptacle
11-8	205838-1	206460-1	206458-1
17-28	206125-1	206126-1	206127-1

Note: One plug must have standard numbering of cavities, and the other plug must have reverse numbering of cavities.

Contact Arrangements, Series 2

Note: Contact arrangements shown are of pin mating face (plug or receptacle). Socket mating face is mirror image.

Shell Size 11

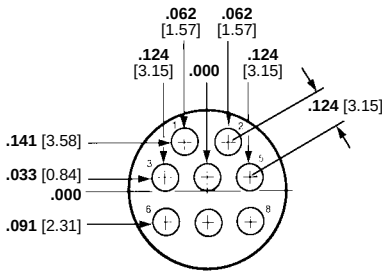

Arrangement 11-8
Max. Wire Ins. Dia. = .068 [1.73]

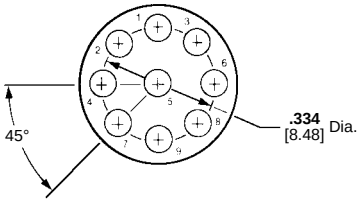

Arrangement 11-9
Max. Wire Ins. Dia. = .068 [1.73]

Shell Size 17

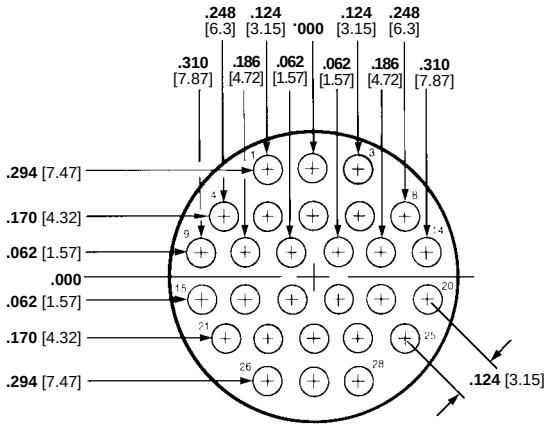

Arrangement 17-28
Max. Wire Ins. Dia. = .068 [1.73]

Shell Size 23

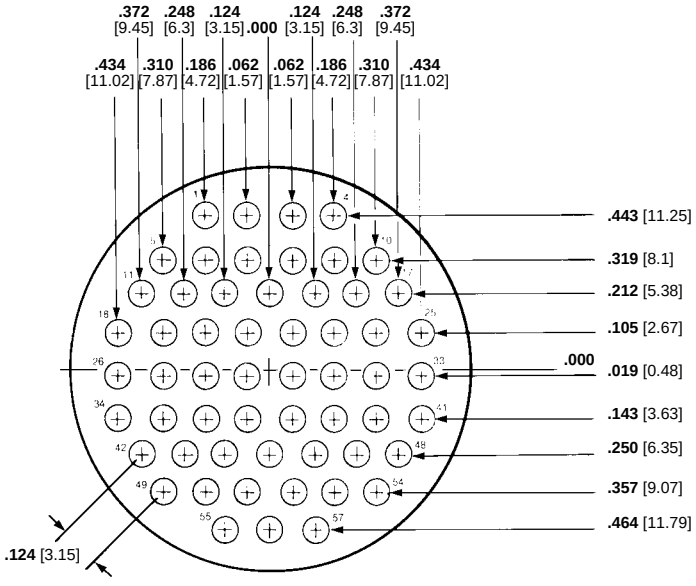

Arrangement 23-57
Max. Wire Ins. Dia. = .068 [1.73]

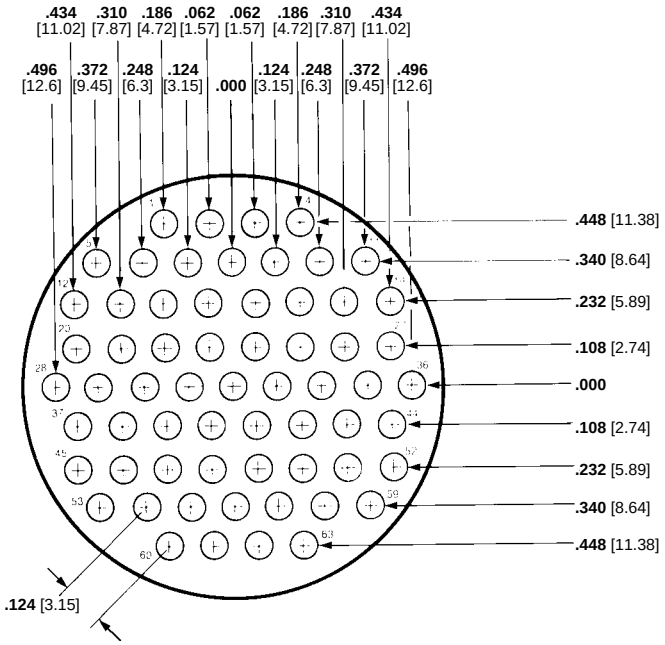

Arrangement 23-63
Max. Wire Ins. Dia. = .068 [1.73]

For complete product information, order Catalog 82021

Products for Industrial & Commercial Applications
Dimensions are shown for reference purposes only.
Dimensions are in inches and millimeters unless otherwise specified. Values in brackets are metric equivalents.
Specifications subject to change.
Technical Support Center
1-800-522-6752
www.tycoelectronics.com

Component Dimensions, Series 2

Square Flange Receptacle

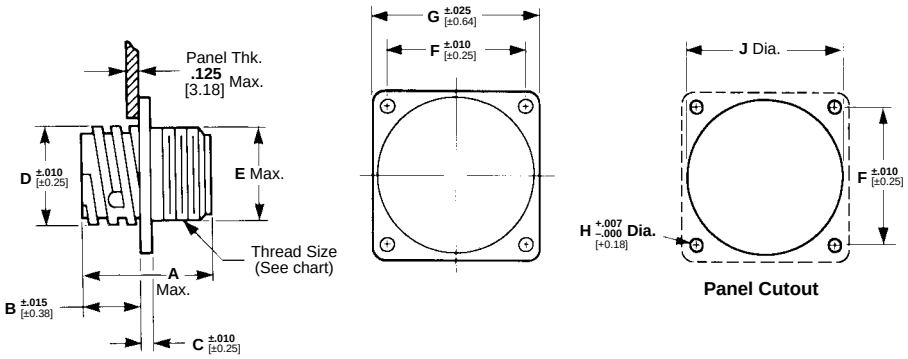

Free-Hanging Receptacle

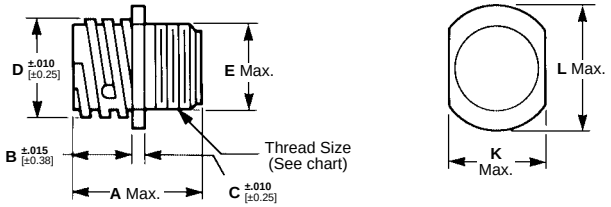

Plug

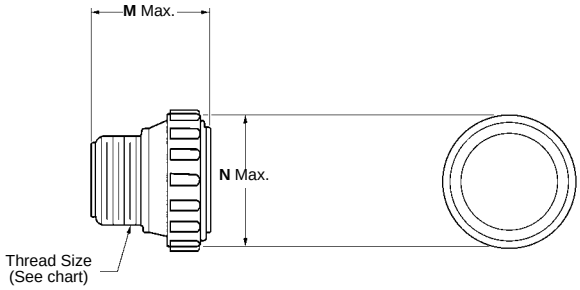

Arrangement No.	Dimensions													Thread Size
	A	B	C	D	E	F	G	H	J	K	L	M	N	
11-8 11-9	**.809** 20.55	**.420** 10.67	**.094** 2.39	**.688** 17.48	**.630** 16.00	**.844** 21.44	**1.125** 28.58	**.125** 3.18	**.840** 21.34	**.817** 20.75	**.935** 23.75	**.800** 20.32	**.975** 24.77	5/8-24 UNEF-2A
17-28	**.809** 20.55	**.420** 10.67	**.094** 2.39	**1.050** 26.67	**.943** 23.95	**1.125** 28.58	**1.435** 36.45	**.150** 3.81	**1.210** 30.73	**1.161** 29.49	**1.310** 33.27	**.800** 20.32	**1.349** 34.26	15/16-20 UNEF-2A
23-57 23-63	**.924** 23.47	**.420** 10.67	**.156** 3.96	**1.438** 36.53	**1.515** 38.48	**1.438** 36.53	**1.750** 44.45	**.150** 3.81	**1.610** 40.89	**1.500** 38.1	**1.733** 44.02	**.915** 23.24	**1.788** 45.42	1-3/8-18 UNEF-2A

Note: All dimensions apply to both standard and reverse sex connectors.

For complete product information, order Catalog 82021

Products for Industrial & Commercial Applications
Dimensions are shown for reference purposes only.
Dimensions are in inches and millimeters unless otherwise specified. Values in brackets are metric equivalents.
Specifications subject to change.
Technical Support Center
1-800-522-6752
www.tycoelectronics.com

Circular Plastic Connectors, Series 3

CPC Connectors, Series 3



Listed part numbers are for connectors only; **contacts must be ordered separately.**

Material:

Housing—Thermoplastic, 94V-0 rated, black

Related Product Data:

Contacts—Page 9114, 9115
Contact Arrangements—Page 9137
Component Dimensions—Page 9137
Accessories—Pages 9139 thru 9142
Performance Characteristics—Page 9122

Technical Documents: Page 9119

Square Flange Receptacle

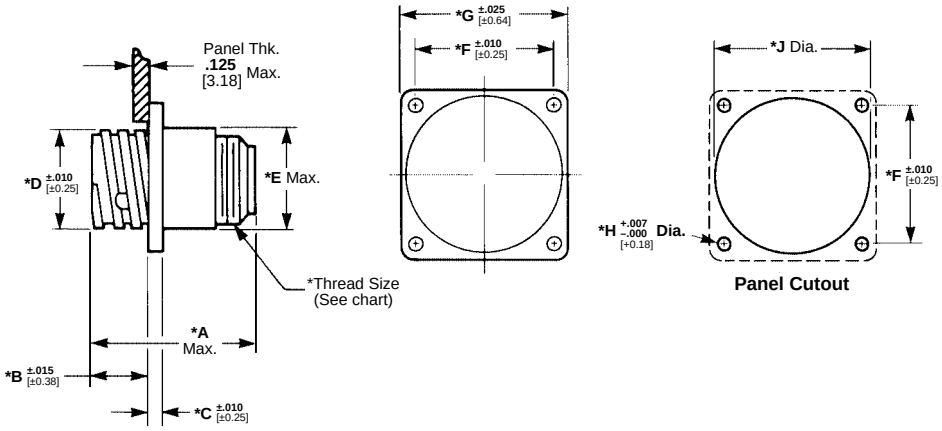

Free-Hanging Receptacle

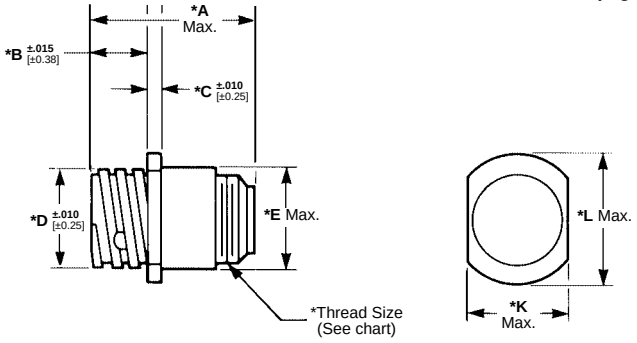

***Note:**
See page 9137 for Callout Dimensions

Plug

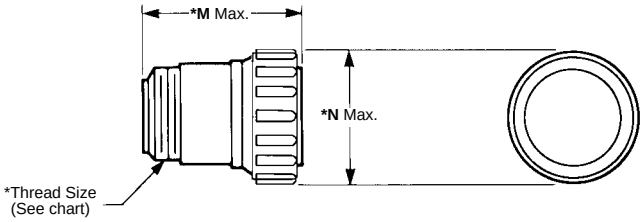

Standard Sex Connectors

(Receptacles accept Type XII Male/pin contacts, Plugs accept Type XII Female/socket contacts)

Arrangement	Square Flange Receptacle		Free-Hanging Receptacle	Plug
	With Mounting Holes	With Threaded Inserts[1]		
17-3	206036-2	213581-1	206207-1	206037-2
23-7	206137-1	206137-5	206137-2	206136-1

[1] Four 4-40 threaded inserts per receptacle.

Reverse Sex Connectors

(Receptacles accept Type XII Female/socket contacts, Plugs accepts Type XII Male/pin contacts)

Arrangement	Square Flange Receptacle		Free-Hanging Receptacle	Plug
	With Mounting Holes	With Threaded Inserts[1]		
17-3	206425-1	206425-5	206425-2	206426-1
23-7	206227-1	206227-6	206227-2	206226-1

[1] Four 4-40 threaded inserts per receptacle.
Note: Maximum wire insulation diameter is .220 [5.59].

For complete product information, order Catalog 82021

Replacement Coupling Rings

Shell Size	Part Numbers
17	213810-1
23	213812-1

Products for Industrial & Commercial Applications
Dimensions are shown for reference purposes only.
Dimensions are in inches and millimeters unless otherwise specified. Values in brackets are metric equivalents.
Specifications subject to change.
Technical Support Center
1-800-522-6752
www.tycoelectronics.com

Contact Arrangements, Series 3

Shell Size 17

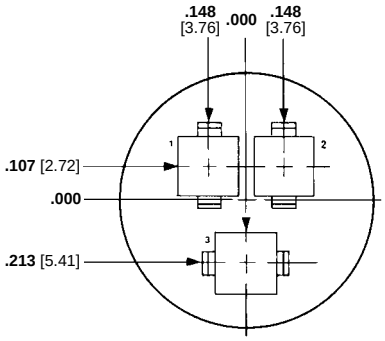

Arrangement 17-3
Max. Wire Ins. Dia. = .220 [5.59]

Shell Size 23

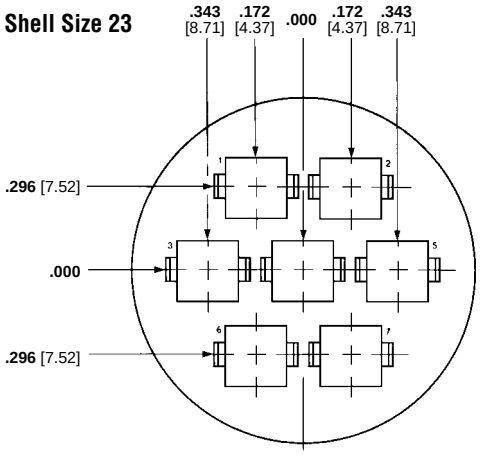

Arrangement 23-7
Max. Wire Ins. Dia. = .220 [5.59]

Note: Contact arrangements shown are of pin mating face (plug or receptacle). Socket mating face is mirror image.

Component Dimensions, Series 3

Square Flange Receptacle

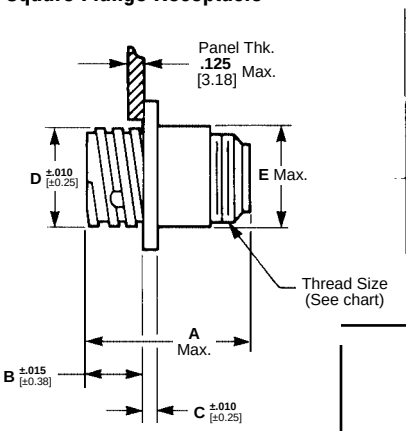

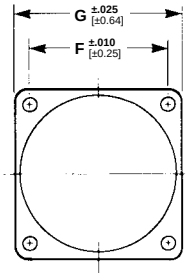

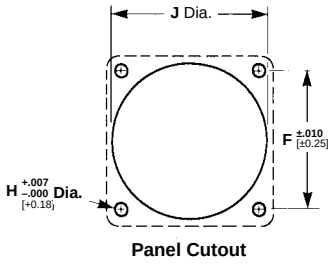

Panel Cutout

Free-Hanging Receptacle

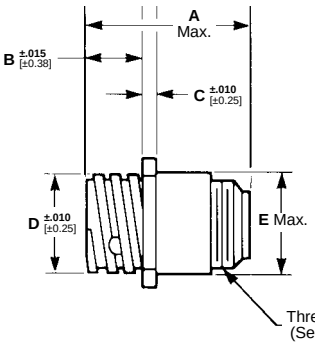

Plug

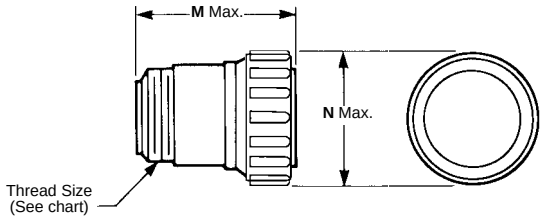

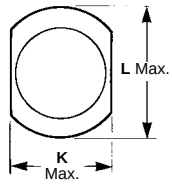

Arrangement No.	Dimensions													Thread Size
	A	B	C	D	E	F	G	H	J	K	L	M	N	
17-3	**1.635** 41.53	**.420** 10.67	**.094** 2.39	**1.050** 26.67	**1.110** 28.19	**1.125** 28.58	**1.435** 36.45	**.150** 3.81	**1.210** 30.73	**1.161** 29.49	**1.310** 33.27	**1.645** 41.78	**1.349** 34.26	15/16-20 UNEF-2A
23-7	**1.635** 41.53	**.520** 13.21	**.156** 3.96	**1.438** 36.53	**1.510** 38.35	**1.438** 36.53	**1.750** 44.45	**.150** 3.81	**1.610** 40.89	**1.505** 38.23	**1.733** 44.02	**1.645** 41.78	**1.788** 45.42	1-3/8-18 UNEF-2A

Note: All dimensions apply to both standard and reverse sex.

For complete product information, order Catalog 82021

Products for Industrial & Commercial Applications
Dimensions are shown for reference purposes only.
Dimensions are in inches and millimeters unless otherwise specified. Values in brackets are metric equivalents.
Specifications subject to change.
Technical Support Center
1-800-522-6752
www.tycoelectronics.com

Circular Plastic Connectors, Series 4

CPC Connectors, Series 4, Standard Sex



Listed part numbers are for connectors only; **contacts must be ordered separately.**

Material:

Housing—Thermoplastic, 94V-0 rated, black

Coupling Ring—(-1) Polyester, black; (-2) Polyphenylene, black

Related Product Data:

Contacts—Pages 9101-9103, 9105, 9109, 9114, 9115

Contact Arrangements—Below

Accessories—Pages 9139 thru 9142

Performance Characteristics—Page 9122

Technical Documents: Page 9119

Replacement Coupling Rings

Shell Size	Part Numbers
23	213812-1

Square Flange Receptacle (Accepts Type XII Male and Multimate pin contacts)

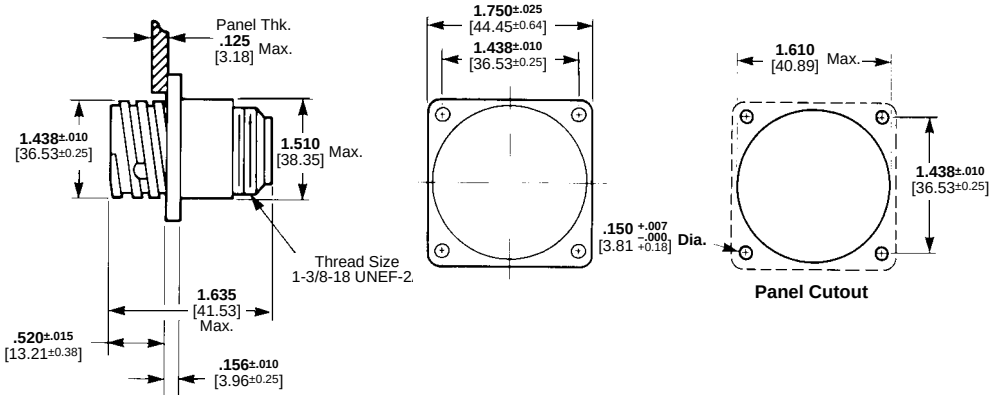

Free-Hanging Receptacle (Accepts Type XII Male and Multimate pin contacts)

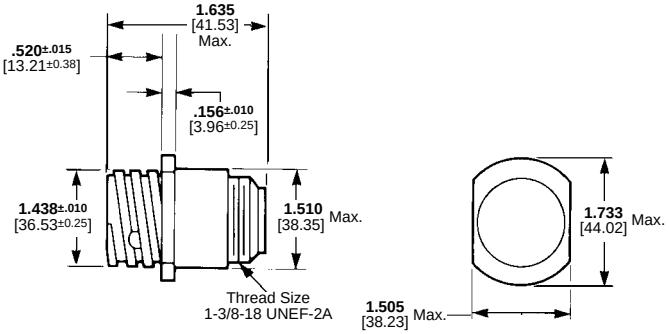

Plug (Accepts Type XII Female and Multimate socket contacts)

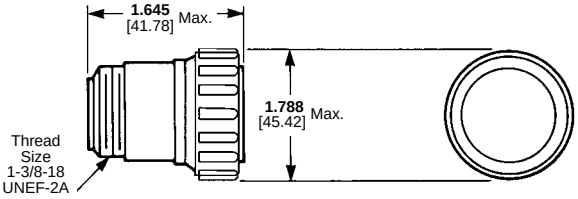

Arrangement	No. of Cavities		Square Flange Receptacle	Free-Hanging Receptacle	Plug
	Power	Multimate			
23-13M	5	8	211825-1	211825-2	211824-1
23-16M	4	12	207486-5* 207486-1	207486-2	207485-1
23-22M	2	20	206613-1 206613-5*	206613-3	206612-1

Note: Maximum wire insulation diameter is .150 [3.81] for Multimate contacts; .220 [5.59] for Power contacts.
* With Periperal Seal

Contact Arrangements, Series 4 Shell Size 23

Note: Contact arrangements shown are of pin mating face (plug or receptacle). Socket mating face is mirror image.

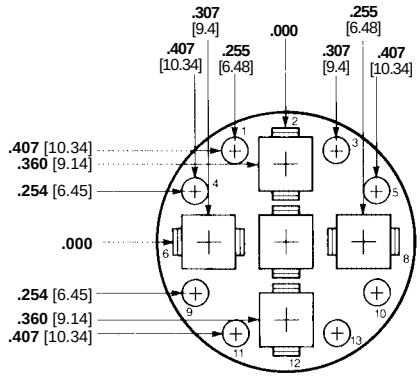

Arrangement 23-13M
Max. Wire Ins. Dia. =
.150 [3.81] for Multimate Contacts,
.220 [5.59] for Power Contacts

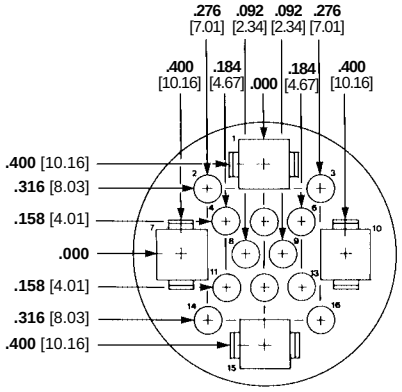

Arrangement 23-16M
Max. Wire Ins. Dia. =
.150 [3.81] for Multimate Contacts,
.220 [5.59] for Power Contacts

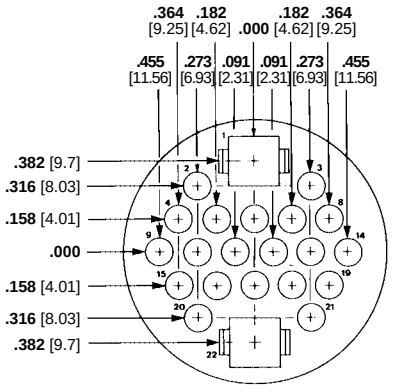

Arrangement 23-22M
Max. Wire Ins. Dia. =
.150 [3.81] for Multimate Contacts,
.220 [5.59] for Power Contacts

Products for Industrial & Commercial Applications
Dimensions are shown for reference purposes only.
Dimensions are in inches and millimeters unless otherwise specified. Values in brackets are metric equivalents.
Specifications subject to change.
Technical Support Center
1-800-522-6752
www.tycoelectronics.com

CPC Connector Accessories

Cable Clamps

Cable clamps provide strain relief and can be used on all series receptacles and plugs.

Material:

Black thermoplastic heat-stabilized, fire-resistant, self-extinguishing, UL 94V-0 rated

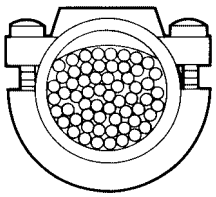

The clamping area can be adjusted by reversing the clamping insert as shown below.

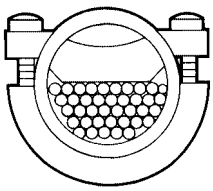

For additional information concerning cable clamps, refer to Instruction Sheet 408-7582.

Standard Size

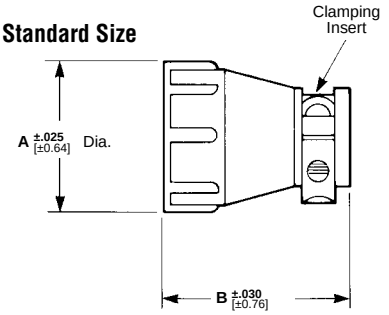

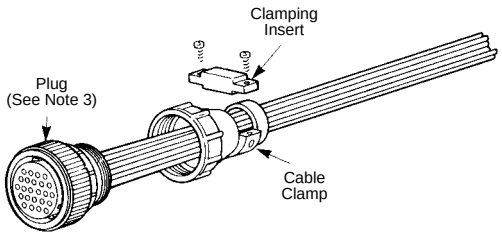

Shell Size	Dimensions A	Dimensions B	Cable O.D. (Max.)	Thread Size	Part Numbers Individually Packaged	Part Numbers Bulk Packaged*
11	**.825** 20.96	**1.250** 31.75	**.329** 8.36	5/8-24 UNEF-2B	—	206062-2** (400)
					206062-3	206062-4** (400)
13	**.950** 24.13	**1.400** 35.56	**.453** 11.51	3/4-20 UNEF-2B	206966-1	206966-2** (200)
17	**1.125** 28.58	**1.400** 35.56	**.453** 11.51	15/16-20 UNEF-2B	206070-1	206070-3** (200)
23	**1.600** 40.64	**1.555** 39.5	**.703** 17.86	1-3/8-18 UNEF-2B	206138-1	206138-2** (100)

*Numbers in parentheses specify, in multiples, the minimum quantity of parts that can be ordered.
Packaging includes two screws: shell sizes 11-17, screw length .500 [12.7]; except shell size 11 **Part Number 206062-2, screw length .375 [9.53]; shell size 23, screw length .625 [15.88].

Notes:
1. Clamping areas adjustable by inverting or changing clamping inserts. The quantity of inserts supplied with each assembly is as follows: for size 11 cable clamps, one insert; for all other cable clamps, two inserts.
2. Components for all cable clamps are packaged unassembled. This includes the cable clamp, two screws and the clamping inserts.
3. Cable clamps can be threaded directly onto plugs or receptacles, or onto back-shell extenders.
4. Replacement screws are available in the following sizes: 3/8 in. [9.52]—19024-1**,** 1/2 in. [12.7]—19024-2**,** 5/8 in. [15.88]—19024-3**,** 1 in. [25.4]—19024-4, 3/4 in. [19.05]—19024-5**.**
5. Cable clamp inserts not sold separately.

Large Size

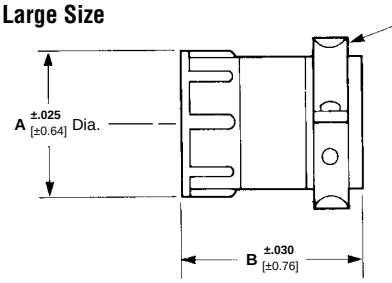

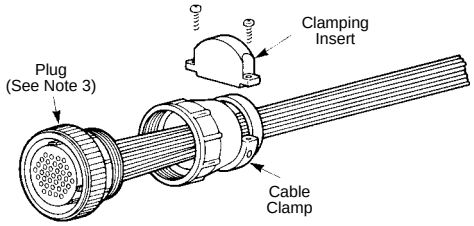

Shell Size	Dimensions A	Dimensions B	Cable O.D. (Max.)	Thread Size	Part Numbers Individually Packaged	Part Numbers Bulk Packaged*
11	**.850** 21.59	**1.450** 36.83	**.453** 11.51	5/8-24 UNEF-2B	206358-1	206358-2** (200)
13	**1.131** 28.73	**1.655** 42.04	**.703** 17.86	3/4-20 UNEF-2B	207008-1	207008-2** (100)
17	**1.131** 28.73	**1.655** 42.04	**.703** 17.86	15/16-20 UNEF-2B	206322-1	206322-2** (100)
					—	206322-6** (100)
23	**1.600** 40.64	**1.655** 42.04	**1.125** 28.58	1-3/8-18 UNEF-2B	206512-1	206512-2** (75)

*Numbers in parentheses specify, in multiples, the minimum quantity of parts that can be ordered.
Packaging includes two screws: shell size 11, screw length .500 [12.7]; shell sizes 13-23, screw length .625 [15.88]; except shell size 17 **Part Number 206322-6, screw length .500 [12.7].

Notes:
1. Clamping areas adjustable by inverting or changing clamping inserts. The quantity of inserts supplied with each assembly is as follows: for size 23 cable clamps, four inserts; for all other cable clamps, two inserts.
2. Components for all cable clamps are packaged unassembled. This includes the cable clamp, two screws and the clamping inserts.
3. Cable clamps can be threaded directly onto plugs or receptacles.
4. Replacement screws are available in the following sizes: 3/8 in. [9.52]—19024-1**,** 1/2 in. [12.7]—19024-2**,** 5/8 in. [15.88]—19024-3**,** 1 in. [25.4]—19024-4, 3/4 in. [19.05]—19024-5**.**
5. Cable clamp inserts not sold separately.

For complete product information, order Catalog 82021

CPC Connector Accessories

Self-Centering Cable Clamp (for Shell Size 23)

The self-centering cable clamp is used in applications where strain relief protection is required and the cable or wire bundle is large and/or stiff.

Material:

Black thermoplastic, UL 94V-0 rated

Part Numbers

207774-1 (individually packaged)
207774-2 (bulk packaged)

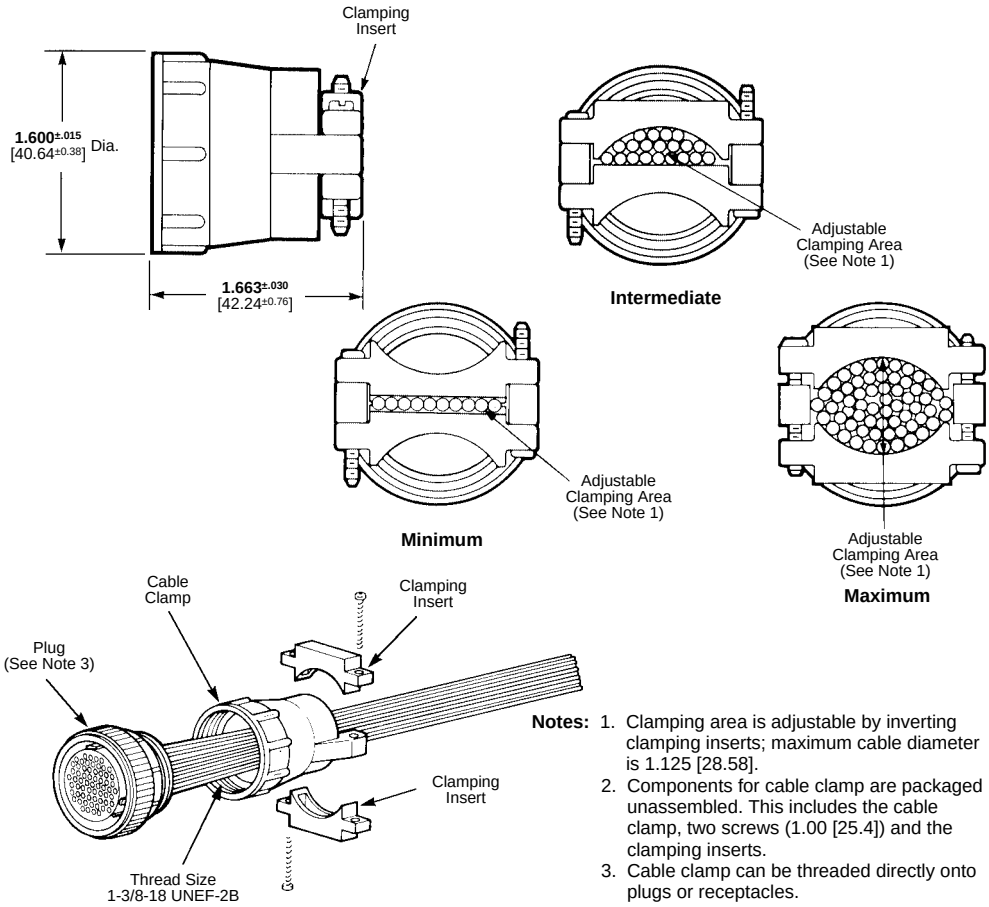

Notes:
1. Clamping area is adjustable by inverting clamping inserts; maximum cable diameter is 1.125 [28.58].
2. Components for cable clamp are packaged unassembled. This includes the cable clamp, two screws (1.00 [25.4]) and the clamping inserts.
3. Cable clamp can be threaded directly onto plugs or receptacles.

Right-Angle Cable Clamps

Right-angle cable clamps are used in tight areas where typical 180° cable clamp strain reliefs will not fit.

Material:

Black thermoplastic, UL 94V-0 rated

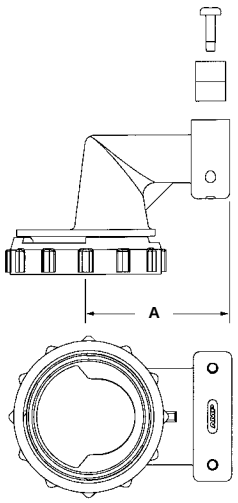

Style A

Shell Size	Dimension A	Cable O.D. Max.	Coupling Ring Thread Size	Part Number
11	**.900** 22.86	**.329** 8.36	5/8-24 UNEF-2B	796379-1
13	**1.100** 27.94	**.453** 11.51	3/4-20 UNEF-2B	796380-1
17	**1.200** 30.48	**.453** 11.51	15/16-20 UNEF-2B	796381-1
23	**1.500** 38.10	**.703** 17.86	1-3/8-18 UNEF-2B	796382-1

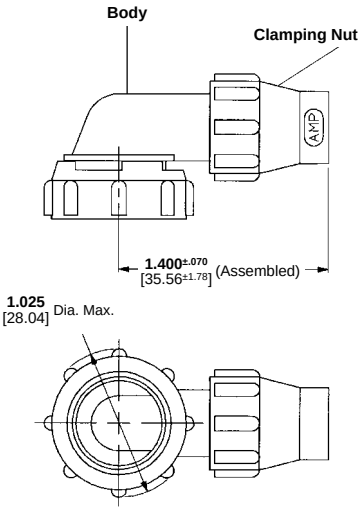

Style B

Part Number 213982-1
(for Shell Size 13-9)

For complete product information, order Catalog 82021

Products for Industrial & Commercial Applications
Dimensions are shown for reference purposes only.
Dimensions are in inches and millimeters unless otherwise specified. Values in brackets are metric equivalents.
Specifications subject to change.
Technical Support Center
1-800-522-6752
www.tycoelectronics.com

CPC Connector Accessories

Panel Mount Flanges (for Plugs only)

A panel mount flange is used in applications that require the plug half of a connector to be panel mounted.

Material:

Black thermoplastic

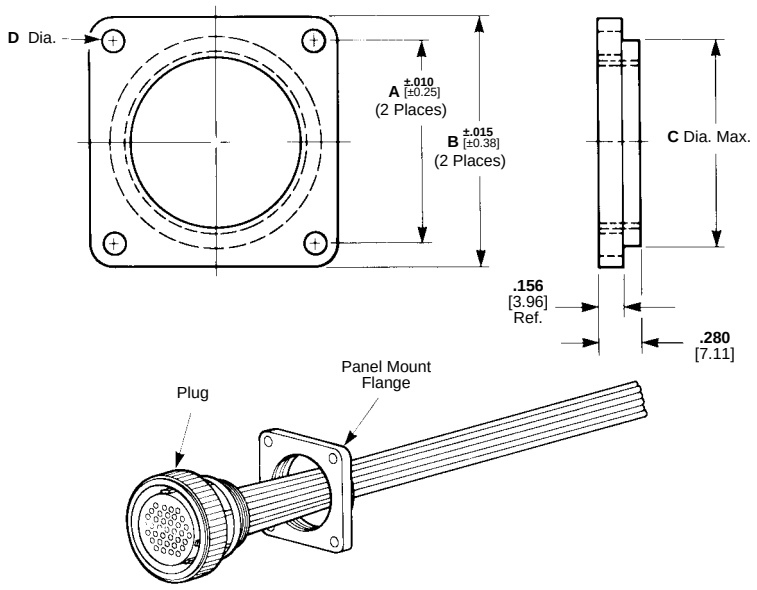

Shell Size	Dimensions				Part Numbers
	A	B	C	D	
11	**.844** 21.44	**1.125** 28.58	**.750** 19.05	**.125** 3.18	207299-1
13	**.969** 24.61	**1.280** 32.51	**.875** 22.22	**.125** 3.18	207299-2
17	**1.125** 28.58	**1.435** 36.45	**1.110** 28.19	**.150** 3.81	207299-3
23	**1.438** 36.53	**1.750** 44.45	**1.510** 38.35	**.150** 3.81	207299-4

Flexible Cable Boot and Internal Cable Grip (for Shell Size 11)

Flexible cable boots, with internal cable grip installed, provide strain relief capabilities for jacketed cable in applications where aesthetic appearance is essential. They can be threaded onto plugs or receptacles.

Material:

Black thermoplastic

Cable Range:

.150-.250 [3.81-6.35] Dia.

Part Numbers
207489-1 (Cable Boot)
207490-1 (Cable Grip)

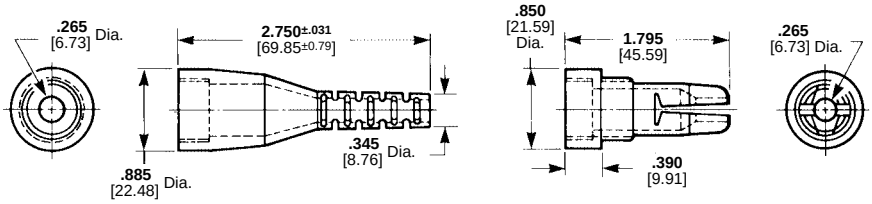

Flexible Cable Boot **Internal Cable Grip**

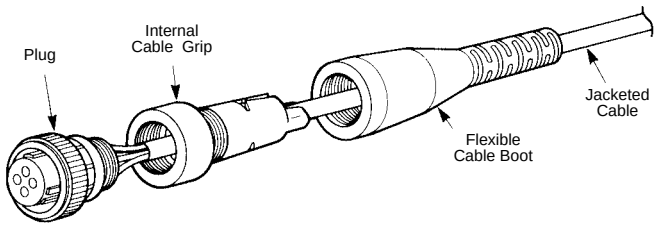

For complete product information, order Catalog 82021

CPC Connector Accessories

Flexible Cable Boot and Internal Cable Grip (for Shell Size 17)

Flexible cable boots, with internal cable grip installed, provide strain relief capabilities for jacketed cable in applications where aesthetic appearance is essential. They can be threaded onto plugs or receptacles.

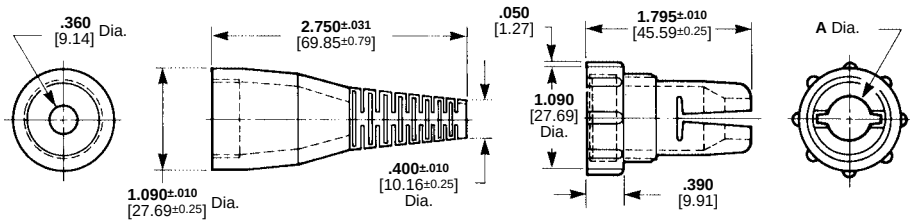

Flexible Cable Boot **Internal Cable Grip**

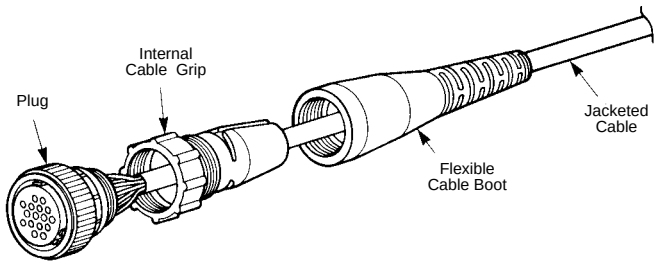

Material:

Black thermoplastic

Part Numbers

207241-1 (Cable Boot)

207387-1 (Cable Grip)
A Dia. = .325 [8.26] for cable range of .200-.250 [5.08-6.35]

207387-2 (Cable Grip)
A Dia. = .385 [9.78] for cable range of .250-.350 [6.35-8.89]

Keying Plugs

Keying plugs are used to provide keying capabilities for all connector series. Keying plugs are used in socket cavities of standard sex plugs and reverse sex receptacles, except when used with sealing caps.

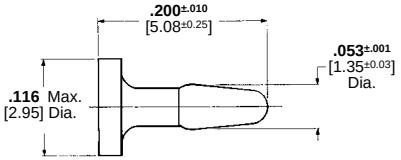

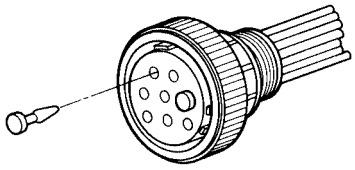

Series 2 Keying Plug
(for Size 20 DM and 20 DF Contacts)

Part Number 206509-1

Material:

Polyphenylene oxide, white, UL 94V-1 rated

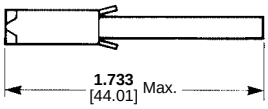

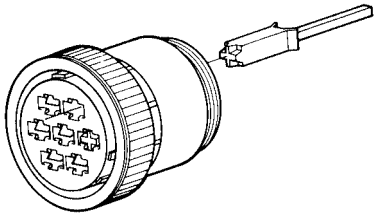

Series 3 and Series 4 Keying Plugs
(for Type XII Contacts)

Material:

(206508-1) Nylon, natural, UL 94V-2 rated

(207597-1) Thermoplastic, black, UL 94V-0 rated

Part Numbers 206508-1 (Socket Cavities)—Shown Above
207597-1 (Pin Cavities)

For complete product information, order Catalog 82021



CPC/Flexa Selection Aid

CPC Shell Size	Flexa Connector Female	PA6 Flexa Tubing	Flexa Connector Male	Flexa R/A Connector Female	Flexa Counter Nut	Flat Sealing Washer
11	1-969807-2	969789-2	969803-2	969817-2	796260-2	796257-2
13	1-969809-3	969789-3	969903-3	969817-3	796260-3	796255-2
17	1-969811-4	969789-4	969803-4	969817-4	796260-5	796255-3
23	2-969813-5	969789-5	969803-5	969817-5	796260-6	796255-4

For complete product information, order Catalog 1307244

Products for Industrial & Commercial Applications
Dimensions are shown for reference purposes only.
Dimensions are in inches and millimeters unless otherwise specified. Values in brackets are metric equivalents.
Specifications subject to change.
Technical Support Center
1-800-522-6752
www.tycoelectronics.com

One-Piece Sealed Circular Plastic Connectors

Product Facts

- **Economical environmentally sealed connector designed for industrial applications**
- **Meets major Industrial Standards**
- **High strength, impact resistant thermoplastic housing, rated UL 94V-0**
- **Contains wire entry and peripheral seals**
- **AMP POWERBAND precision formed power contact (Series 5 and 6)**
- **Type III+ precision formed signal/low current contacts (Series 1 and Series 6)**
- **Other configurations in Series 1 can be made available, contact your local Tyco Electronics Sales Engineer or Tyco Electronics, Harrisburg, PA**

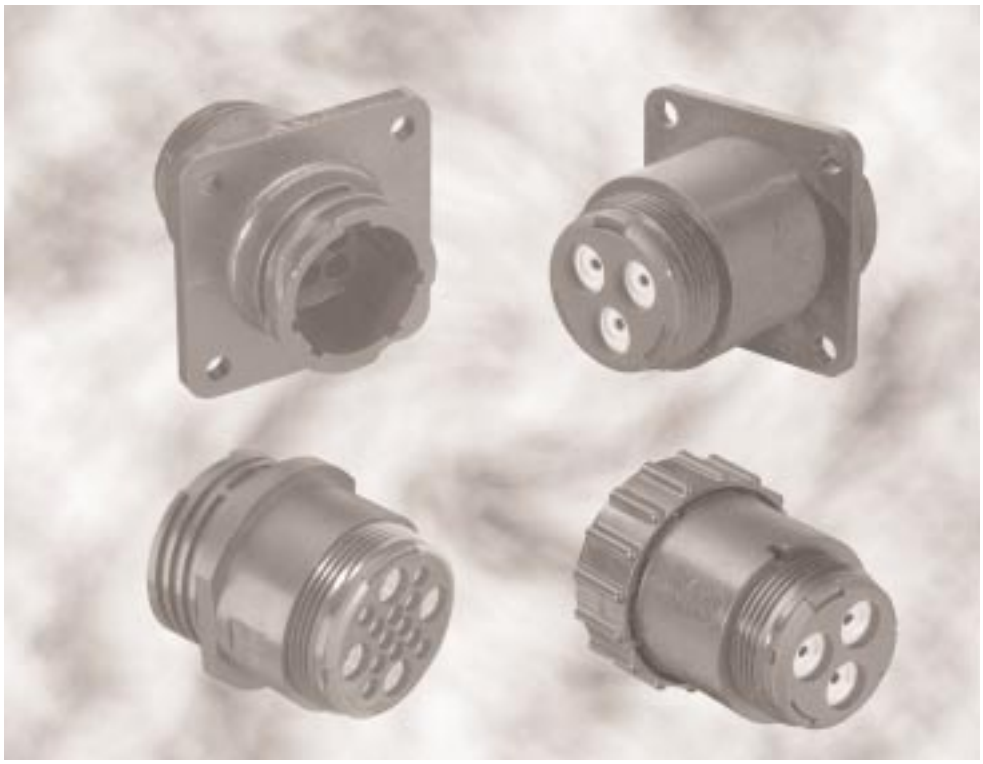

The new Sealed One-Piece Circular Plastic Connectors are the latest product innovation to the sealed CPC product family. This design allows for easier assembly. The housing and the seal are attached. A newly designed wire entry seal protects the rear of the connector and a peripheral seal protects the connector interface. Simply crimp the contact onto a wire and insert the crimped wire contact through the seal and into the housing cavity. The connector loads the same as if the seal wasn't there. All connector cavities come in a sealed condition. No plugs are required if you do not use a position cavity. We have the capability to provide this product sealing to you in all the shell sizes. If you don't see your particular size configuration, contact your local Tyco Electronics Sales Engineer or call Tyco Electronics for the latest information.

Industry Standards

One-Piece Sealed CPC products meet –

- IP 67 (Temporary immersion)

Fluid Protection Against – diesel fuel, gear and engine lubricants, gasoline, anti-freeze, hydraulic fluid, water, salt sprays, etc.

Performance Characteristics: meets the same performance characteristics as shown on page 9122.

Operating Temperature Range—
-50°C to +125°C

Voltage Rating—
Series 1 600 V (AC or DC)
Series 6 250 V (AC or DC)

Power Contact—.125 POWERBAND
45 amps, single contact rating at 30°C T-Rise

Type III+ Contacts –
13 amps, single contact rating at 30°C T-Rise

Flammability Rating—
UL 94V-0 rated

Sealing Capability—
Per IP 67

Housing Material—
High strength, impact resistant thermoplastic

Fluid Resistance—
Diesel fuel, gear and engine lubricants, gasoline, anti-freeze, hydraulic fluid, water

For complete product information, order Catalog 82021

Products for Industrial & Commercial Applications
Dimensions are shown for reference purposes only.
Dimensions are in inches and millimeters unless otherwise specified. Values in brackets are metric equivalents.
Specifications subject to change.
Technical Support Center
1-800-522-6752
www.tycoelectronics.com

One-Piece Sealed Circular Plastic Connectors, Series 1

Sealed CPC Receptacles, Special Series 1 with Pre-Installed, Bonded Peripheral Seal



Listed part numbers are for connectors only; **contacts must be ordered separately.**

Material and Finish:

Housing—Thermoplastic, UL 94V-0 rated, black

Seal—Elastomer, gray

Related Product Data:

Contacts—Pages 9101-9103, 9105, 9109

Contact Arrangement—Page 9129

Component Dimensions—Size 11-4 shown; request Customer Drawings for other sizes

Accessories—Pages 9139 thru 9142 and 9150 and 9152

Performance Characteristics—Page 9122

Technical Documents: Page 9119

Square Flange Receptacle (Uses Flange Seal **Part Number** 81665-☐ on page 9150)

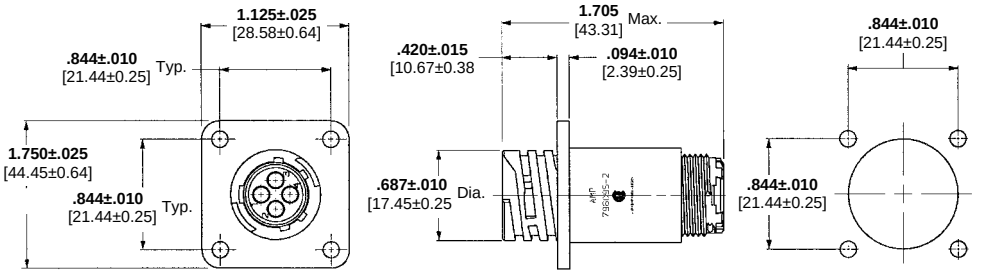

Recommended Panel Cutout

Free-Hanging Receptacle

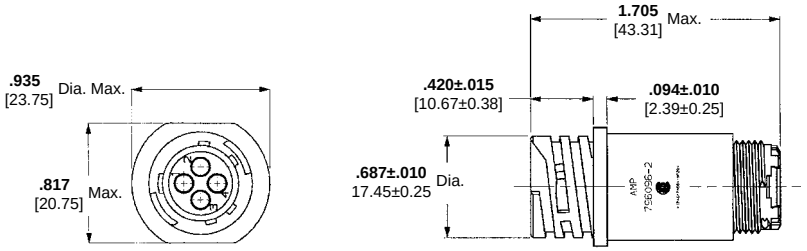

Plug

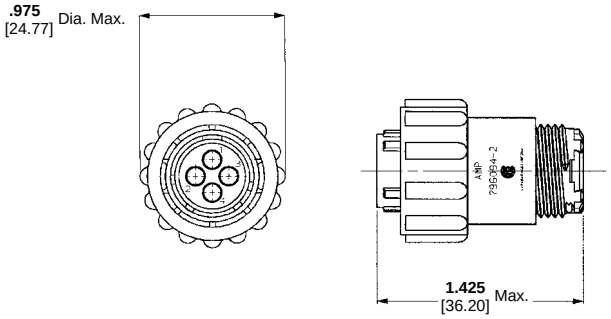

Arrangement			Square Flange Recptacle				
Shell Size	No. of Positions	Sex	With Mounting Holes	With Threaded Inserts[1]	Free-Hanging Receptacle	Plug	Insulation Diameter
11-4		Standard	796095-2	–	796096-2	796094-2	**.065-.100** [1.65-2.54]
		Reverse	788154-2	–	788155-2	788153-2	**.065-.100** [1.65-2.54]
13-9		Standard	788158-2	–	788159-2	788157-2	**.065-.100** [1.65-2.54]
17-14		Reverse	796272-1	–	796273-1	796271-1	**.065-.100** [1.65-2.54]
17-16		Standard	796275-1	796275-3	796276-1	796274-1	**.065-.100** [1.65-2.54]
		Standard	796275-2	–	796276-2	796274-2	**.040-.080** [1.01-2.03]
23-24		Standard	796190-1	–	796291-1	796188-1	**.065-.120** [1.65-3.04]
23-37		Standard	796286-1	–	796287-1	796288-1	**.065-.100** [1.65-2.54]

[1]Four 4-40 threaded inserts per receptacle.

Assembly Accessories

Seal Protectors are recommended to aid contact insertion through the wire entry seal. They are reusable.



Part Number 208337-1 (Insert Pins)
Part Number 208338-1 (Insert Sockets)

Wire Entry Seal Plug

Part Number 796075-1 (6 per carrier strip)
Material—Polypropylene, natural

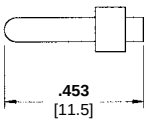

For complete product information, order Catalog 82021

Products for Industrial & Commercial Applications
Dimensions are shown for reference purposes only.
Dimensions are in inches and millimeters unless otherwise specified. Values in brackets are metric equivalents.
Specifications subject to change.
Technical Support Center
1-800-522-6752
www.tycoelectronics.com

One-Piece Sealed Circular Plastic Connectors, Series 5

CPC Connectors, Series 5 Sealed – Reverse Sex



Listed part numbers are for connectors only; **contacts must be ordered separately.**

Material:

Housing—Nylon, glass-filled UL rated 94V-0, black

Related Product Data:

Contacts—Pages 9111
Accessories—Page 9150

Technical Documents: Page 9119

Square Flange Receptacle (Uses Flange Seal **Part Number** 81665-2 on page 9150)

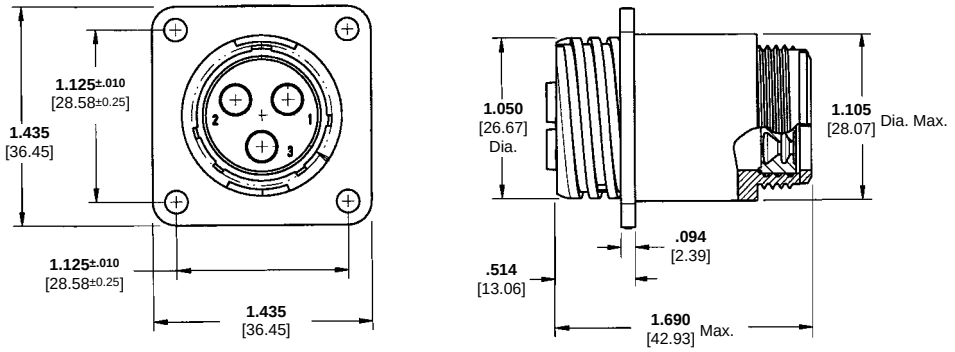

Plug

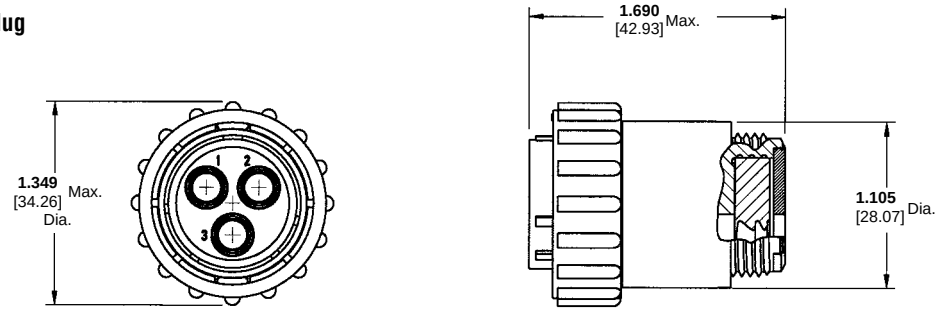

Arrangement	Insulation Diameter	Square Flange Receptacle	Free Hanging Receptacle	Plug
17-3	**.095-.205** [2.41-5.21]	788189-1	796112-1	788188-1
	.150-.265 [3.81-6.73]	788189-2	796112-2	788188-2

One-Piece Sealed Circular Plastic Connectors, Series 6

CPC Connectors, Series 6 Sealed



Listed part numbers are for connectors only; **contacts must be ordered separately.**

Material:

Housing—Nylon, glass-filled UL rated 94V-0, black

Related Product Data:

Contacts—Pages 9101-9103, 9105, 9109, 9111

Technical Documents: Page 9119

For complete product information, order Catalog 82021

Free Hanging Receptacle

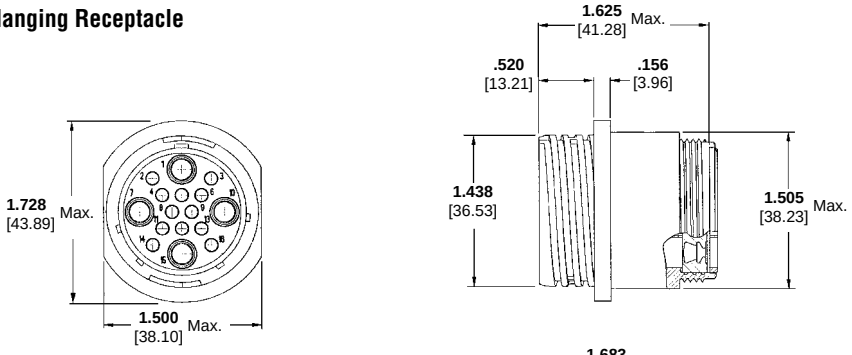

Plug

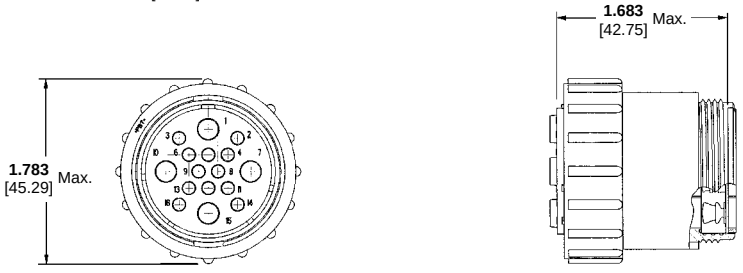

Arrangement	Sex	Free-Hanging Receptacle	Plug	Insulation Diameter	
				Power	Signal
23-16	Standard	796207-1	796203-1	**.095-.205** [2.41-5.21]	**.065-.100** [1.65-2.54]
	Reverse	796330-1	796332-1	**.150-.265** [3.81-6.73]	**.065-.100** [1.65-2.54]

Two-Piece Sealed Circular Plastic Connectors

Product Facts

- **Economical environmentally sealed connector designed for industrial applications**
- **Meets major Industrial Standards**
- **High strength, impact resistant thermoplastic housing, rated UL 94V-0**
- **Contains wire entry, peripheral, and full interfacial seals**
- **AMP POWERBAND precision formed power contact (Series 5 and 6)**
- **Type III+ precision formed signal/low current contacts (Series 6)**
- **Other configurations in Series 1 can be made available, contact your local Tyco Electronics Sales Engineer or Tyco Electronics, Harrisburg, PA**



Sealed CPC connectors are the latest additions to the growing family of AMP Circular Plastic Connectors. Sealed CPC connectors were developed as part of the Series 5 and 6 product line, specifically to meet the increasing needs for an economical environmentally sealed connector.

Sealed CPC connectors are designed to meet the requirements of UL, CSA, and VDE for environmentally sealed connectors used in industrial applications.

In addition, sealed CPC connectors are designed to meet the latest SAE and ASAE requirements as outlined in the standards listed here.

Sealed CPC connectors incorporated the latest technology in thermoplastic design and use the new AMP POWERBAND precision formed high current contact.

Illustrated above are the Series 5 (power) and Series 6 (power/signal mix) sealed connector configurations. Other sizes are available in a Series 1 (signal/low current) configuration. Contact your local Tyco Electronics Sales Engineer, or call Tyco Electronics for the latest design information.

Industry Standards

Two-Piece Sealed CPC connectors meet—

- SAE— J2030
- ASAE— EP455
- IP— 65
- UL— 1977
- NEMA 250— Class 4

Performance Characteristics:

Operating Temperature Range—
-50°C to +125°C

Voltage Rating—

Series 5	600 V (AC or DC)
Series 6	250 V (AC or DC)

.125 POWERBAND Power Contact—
45 amps, single contact rating at 30°C T-Rise

Type III+ Contacts –
13 amps, single contact rating at 30°C T-Rise

Flammability Rating—UL 94V-0 rated

Sealing Capability—Per IP 65

Housing Material—High strength, impact resistant thermoplastic

Fluid Resistance—Diesel fuel, gear and engine lubricants, gasoline, anti-freeze, hydraulic fluid, water

Technical Documents:

Product Specification
108-1579 Sealed CPC Connectors with Removable Contacts

Instruction Sheet
408-4317 Two-Piece Sealed CPC Connectors

For complete product information, order Catalog 82021

Products for Industrial & Commercial Applications

Dimensions are shown for reference purposes only.

Dimensions are in inches and millimeters unless otherwise specified. Values in brackets are metric equivalents.

Specifications subject to change.

Technical Support Center
1-800-522-6752
www.tycoelectronics.com

Two-Piece Sealed Circular Plastic Connectors, Series 5

CPC Connectors, Series 5 Sealed – Reverse Sex



Listed part numbers are for connectors only; **contacts must be ordered separately.**

Material:

Housing—Nylon, glass-filled UL rated 94V-0, black

Related Product Data:

Contacts—page 9111
Accessories—page 9150

Technical Documents: page 9146

Replacement Coupling Rings

Shell Size	Part Number
17-3	213810-1

Square Flange Receptacle (Uses Flange Seal **Part Number** 81665-2 on page 9150)

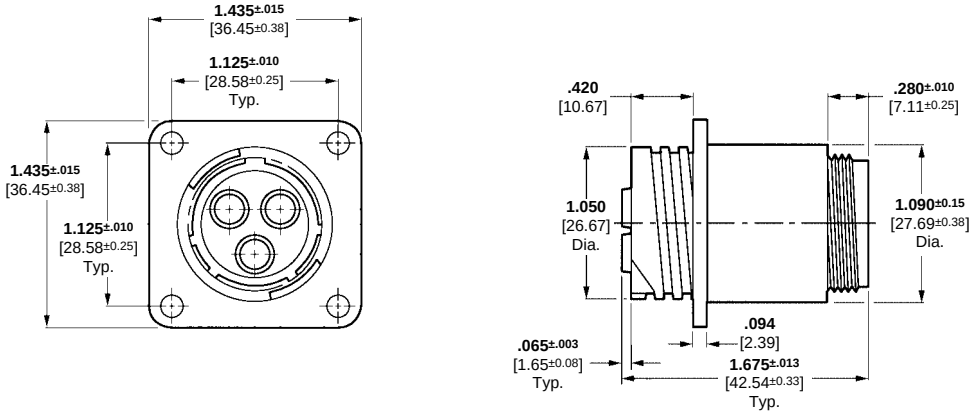

Free-Hanging Receptacle

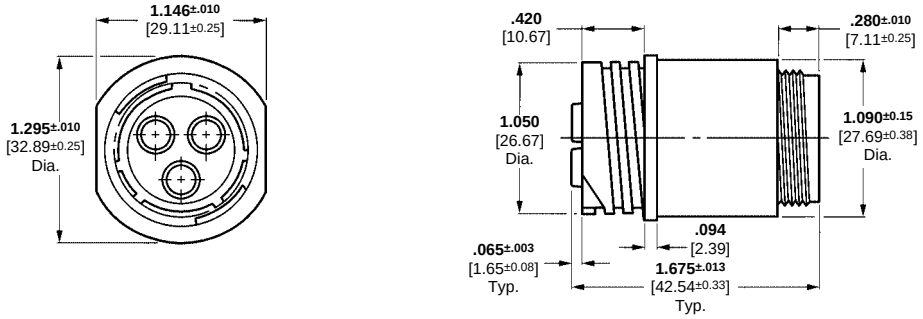

Plug (With Full Interfacial Seal)

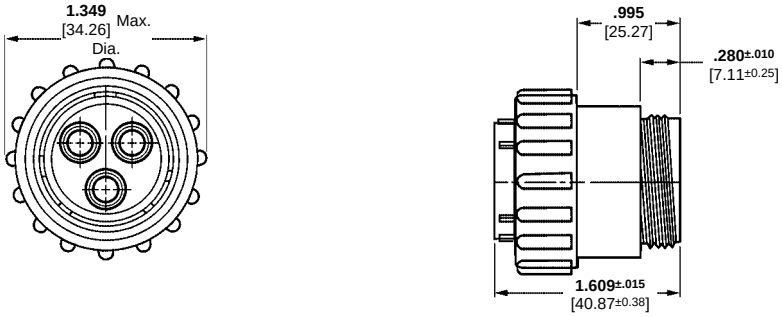

(Receptacles accept socket contacts, Plugs accept pin contacts)

Arrangement	Square Flange Receptacle	Free-Hanging Receptacle	Plug
17-3 - Connector	213889-2	213890-2	213905-1
17-3 - Wire Entry Seal Kit	213899-1	213899-1	213899-1

Kit includes (1) Silicon Wire Entry Seal and (1) Pressure Plate.
*Wire entry seals require cable clamp kits.

Wire Entry Seals*

*Cable clamp kit 213902-1 required. (Similar to 206322-1. See page 9139 for dimensional detail of cable clamp) or cable clamp kit 213904-1. (Similar to 206070-1. See page 9139 for dimensional detail of cable clamp).

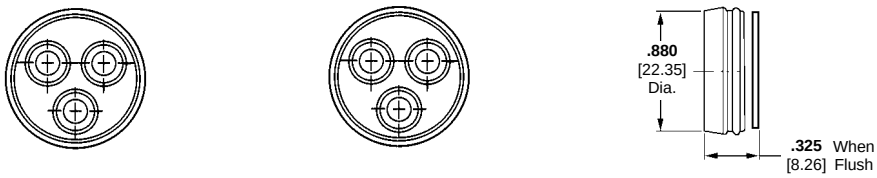

Rear View Receptacles | **Rear View Plugs** | **Side View Plugs/Receptacles**

Note: Minimum insulation diameter is .156 [3.96]; maximum insulation diameter is .260 [6.60].

For complete product information, order Catalog 82021

Products for Industrial & Commercial Applications
Dimensions are shown for reference purposes only.
Dimensions are in inches and millimeters unless otherwise specified. Values in brackets are metric equivalents.
Specifications subject to change.
Technical Support Center
1-800-522-6752
www.tycoelectronics.com

Two-Piece Sealed Circular Plastic Connectors, Series 6

CPC Connectors, Series 6 Sealed – Reverse Sex



Listed part numbers are for connectors only; **contacts must be ordered separately.**

Material:

Housing—Nylon, glass-filled UL rated 94V-0, black

Related Product Data:

Contacts—pages 9101-9103, 9105, 9109, 9111

Accessories—page 9150

Technical Documents: page 9146

Replacement Coupling Rings

Shell Size	Part Number
17-10	213810-1

Square Flange Receptacle (Uses Flange Seal **Part Number** 81665-2 on page 9150)

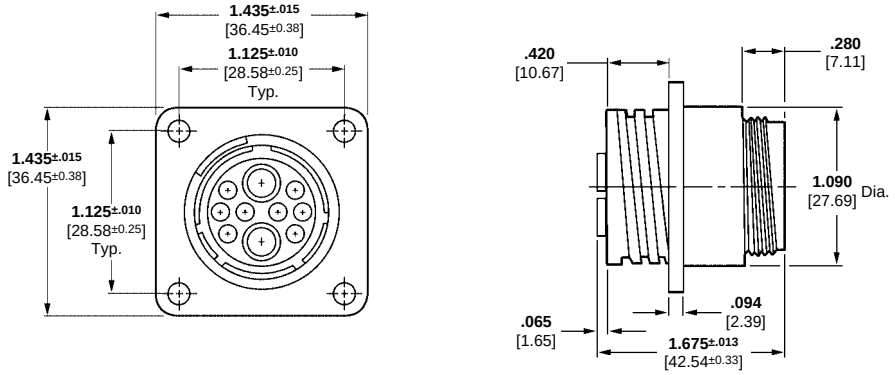

Free-Hanging Receptacle

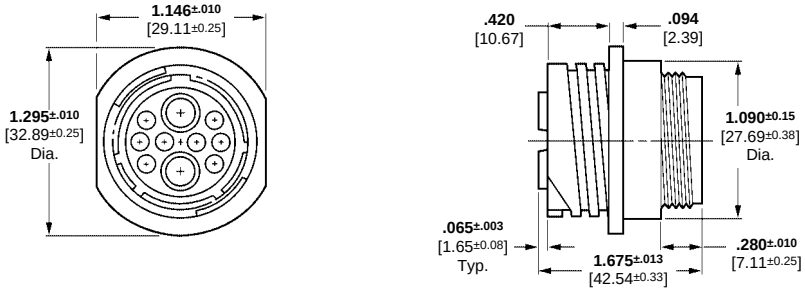

Plug (With Full Interfacial Seal)

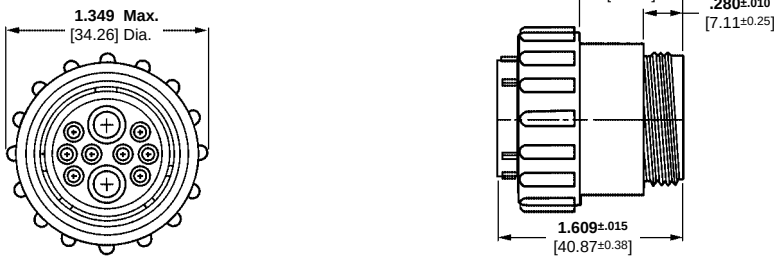

(Receptacles accept socket contacts, Plugs accept pin contacts)

Arrangement	Square Flange Receptacle	Free-Hanging Receptacle	Plug
17-10 Connector	213893-2	213894-2	213906-1
17-10 Wire Entry Seal Kit	213900-1	213900-1	213900-1

Kit includes (1) Silicon Wire Entry Seal and (1) Pressure Plate.
*Wire entry seals require cable clamp kits.

Wire Entry Seal*

*Cable clamp kit 213902-1 required. (Similar to 206322-1. See page 9139 for dimensional detail of cable clamp) or cable clamp kit 213904-1. (Similar to 206070-1. See page 9139 for dimensional detail of cable clamp).

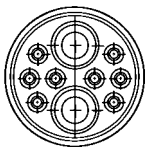

Rear View Receptacles

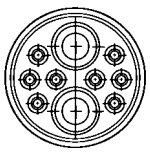

Rear View Plugs

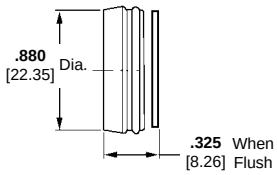

Side View Plugs/Receptacles

Note: Minimum insulation diameter is .156 [3.96]; maximum insulation diameter is .260 [6.60] for power contacts. Minimum insulation diameter is .060 [1.50]; maximum insulation diameter is .130 [3.30] for signal contacts.

For complete product information, order Catalog 82021

Products for Industrial & Commercial Applications
Dimensions are shown for reference purposes only.
Dimensions are in inches and millimeters unless otherwise specified. Values in brackets are metric equivalents.
Specifications subject to change.
Technical Support Center
1-800-522-6752
www.tycoelectronics.com

Two-Piece Sealed Circular Plastic Connectors, Special Series 1

Sealed CPC Receptacles, Special Series 1 with Pre-Installed, Bonded Peripheral Seal



Listed part numbers are for connectors only; **contacts must be ordered separately.**

Material and Finish:

Housing—Thermoplastic, UL 94V-0 rated, black

Seal—Elastomer, gray

Related Product Data:

Contacts—pages 9101-9103, 9105, 9109

Contact Arrangement—page 9129

Accessories—pages 9139 thru 9142 and 9150 thru 9152

Performance Characteristics—page 9122

Square Flange Receptacle (Uses Flange Seal **Part Number** 81665-☐ on page 9150)

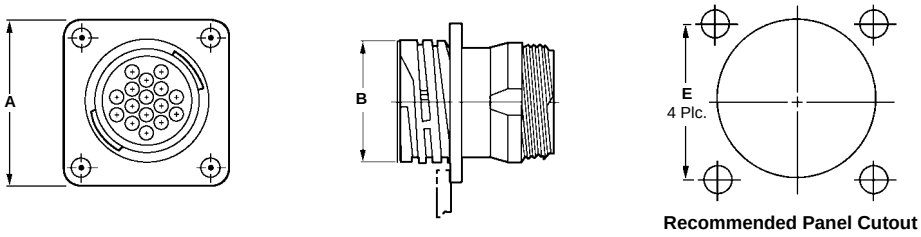

Recommended Panel Cutout

Free-Hanging Receptacle

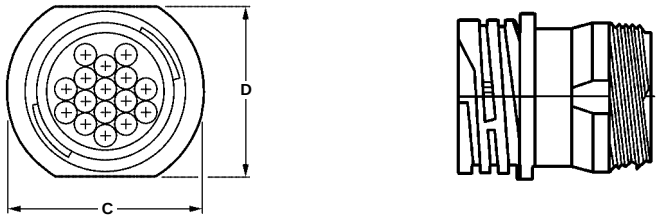

Shell Size	Dimension E
11	**.844** 21.44
13	**.969** 24.61
17	**1.125** 28.58
23	**1.438** 36.53

Technical Documents: page 9146

Shell Size	Series I Receptacles with Peripheral Seal								Mates with Plug Part Numbers
	Dimensions		Contact Arrangement	Sex	Square Flange Part Numbers	Dimensions		Free-Hanging Part Numbers	
	A	B				C	D		
11	**1.125** 28.58	**.607** 15.42	11-4	Std.	206061-2	**.935** 23.75	**.817** 20.75	206153-2	206060-1
				Rev.	206430-3			206430-4	206429-1
13	**1.281** 32.54	**.812** 20.62	13-9	Std.	206705-3	**1.072** 27.23	**.874** 22.20	206705-4	206708-1
17	**1.435** 36.45	**1.050** 26.67	17-16	Std.	206036-4	**1.310** 33.27	**1.161** 29.49	206036-5	206037-1
			17-14	Rev.	206043-4			206043-5	206044-1
23	**1.750** 44.45	**1.438** 36.53	23-24	Std.	206838-3	**1.733** 44.02	**1.505** 38.23	206838-4	206305-4
			23-37	Std.	206151-3			206151-4	206150-3
				Rev.	206306-3			206306-4	206837-3

Notes: 1. For detailed performance data on peripheral seals, refer to AMP Product Specification No. 108-10024.
2. Receptacle mates with Series 1 plugs found on page 9124.

Seal shown outside of connector for illustration purposes only.

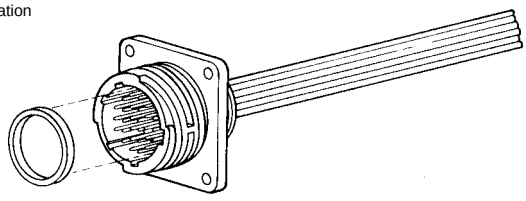

Receptacles with pre-installed, bonded peripheral seals are recommended for use in sealing/splash-proof applications, or where connectors will be subjected to vibration.

For complete product information, order Catalog 82021

Products for Industrial & Commercial Applications
Dimensions are shown for reference purposes only.
Dimensions are in inches and millimeters unless otherwise specified. Values in brackets are metric equivalents.
Specifications subject to change.
Technical Support Center
1-800-522-6752
www.tycoelectronics.com

Two-Piece Circular Plastic Connector Sealing Accessories

Wire Entry Seal Kits
for Plug and Receptacle Housings

Material and Finish:

Seal—Silicon, black
Pressure Plate—Nylon, black

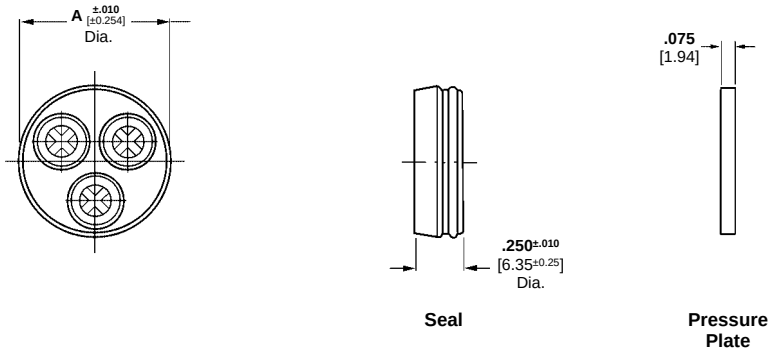

Arrangement No.	Insulation Dia. Range	Dimension A	Kit for Pins	Kit for Sockets
13-9	**.075-.125** 1.91-3.18	**.681** 17.30	213926-1	213925-1
17-3	**.178-.265** 4.52-6.73	**.790** 20.07	213899-1	213899-1
17-10	**.178-.265** 4.52-6.73 / **.075-.125** 1.91-3.18	**.790** 20.07	213900-1	213900-1
17-14	**.075-.125** 1.91-3.16	**.790** 20.07	213919-2	213919-1
17-16	**.075-.125** 1.91-3.16	**.790** 20.07	213920-2	213920-1

Notes: 1. Kits include one Gang Seal and one pressure plate marked for cavity identification.
2. Arrangement No. 17-10 Insulation Dia. Range **.176-.265** [4.52-6.73] for two holes, **.075-125** [1.95-3.18] for eight holes.

One-Piece or Two-Piece Sealed CPC Sealing Accessories

Flange Seals

Material:

Neoprene, black
Dimensions—Size 17 shown; request Customer Drawings for other sizes

Shell Size	Part Numbers
11	81665-3
13	81665-4
17	81665-2
23	81665-5

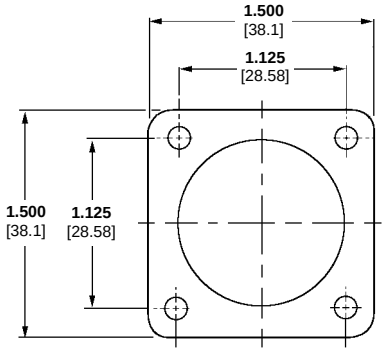

Peripheral Seal

Material:

Elastomer, gray

Shell Size	Part Number
23	206403-3

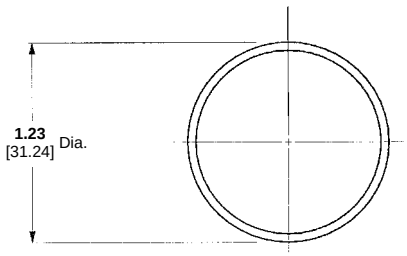

For complete product information, order Catalog 82021

Products for Industrial & Commercial Applications
Dimensions are shown for reference purposes only.
Dimensions are in inches and millimeters unless otherwise specified. Values in brackets are metric equivalents.
Specifications subject to change.
Technical Support Center
1-800-522-6752
www.tycoelectronics.com

Circular Plastic Connector Sealing Accessories

Sealing Caps
for Receptacles only

Sealing caps are used to protect exposed contacts of unmated receptacles.

Material and Finish:

Cap—Thermoplastic, heat stabilized, fire resistant, self-extinguishing, 94V-1 rated, black
Sealing Gasket—Neoprene, black
Bead Chain—Steel, nickel plated
Bead Chain Coupling—Brass, plated nickel

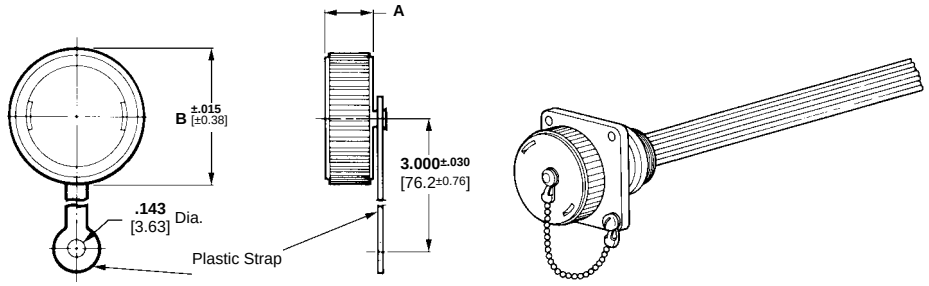

Shell Size	Series	Dimensions		Part Numbers	
		A	B	With Plastic Strap	With Metal Bead Chain
11	1 & 2	**.360** 9.14	**.927** 23.55	206903-1	208800-1
13	1	**.360** 9.14	**1.055** 26.80	211870-1	213485-1
17	1,2,& 3	**.360** 9.14	**1.295** 32.89	207445-1	208652-1
23	1, 3, & 4	**.460** 11.68	**1.728** 43.89	207446-1	208680-1
	2			207446-2	208680-2

Cable Entry Seals
Heat Shrinkable Sealing Boots

Cable entry seals are used with jacketed cable to provide an environmentally sealed wire-to-connector system. They can be used with either plugs or receptacles.

Thick Wall Boots

Material:

Internal Sleeve—Nylon
Outer Tubing—Polyolefin

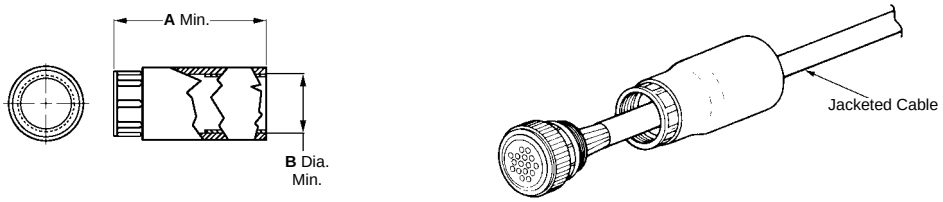

Shell Size	Dimensions		Expanded Wall Thickness	Sealing Range (Dia.)	Max. Recovered Wall Thickness	Part Numbers
	A	B				
11	**2.500** 63.50	**.625** 15.88	**.080** 2.03 Ref.	**.260 - .600** 6.60 - 15.25	**.120** 2.59 Ref.	54010-1
13	**2.500** 63.50	**.775** 19.68	**.080** 2.03 Ref.	**.375 - .725** 9.53- 18.42	**.120** 2.59 Ref.	54123-1
17	**2.500** 63.50	**.975** 24.76	**.080** 2.03 Ref.	**.400 - .875** 10.16 - 22.22	**.120** 2.59 Ref.	54011-1
	3.000 76.20	**.975** 24.76	**.080** 2.03 Ref.	**.400 - .875** 10.16 - 22.22	**.120** 2.59 Ref.	54011-3
23	**3.000** 76.20	**1.250** 31.75	**.080** 2.03 Ref.	**.550 - 1.250** 13.97 - 31.75	**.120** 2.59 Ref.	54012-1

Thin Wall Boot

Material:

Inter Sleeve—Nylon
Outer Tubing—Polyolefin
Expanded Wall Thickness—.020 [0.51]
Max. Recovered Wall Thickness—.040 [10.16]
Sealing Range—.250 [6.35]-.500 [12.70] Dia.

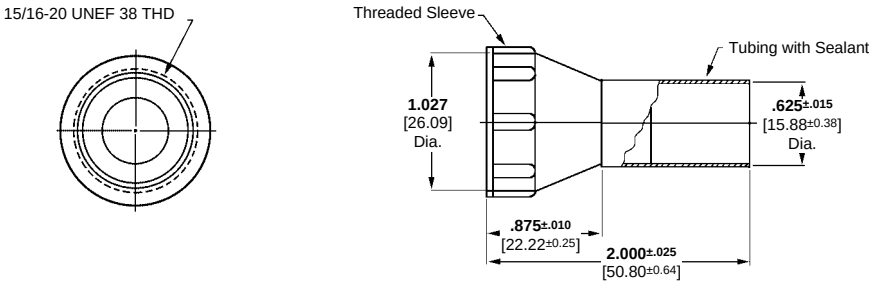

Shell Size 17
Part Number 213933-1

For complete product information, order Catalog 82021

Circular Plastic Connector Sealing Accessories

Jacketed Cable Seals (for Shell Size 23)

A jacketed cable seal kit provides an environmentally sealed connection for jacketed cable.

Material:

Peripheral Seal—Grey elastomer
Collar—Aluminum
Jacketed Cable Seal—Black rubber
Back-Shell Extender—Black glass-filled thermoplastic
Special Clamp Saddle—Black thermoplastic

Note: Jacketed cable seals must be used with large cable clamps and can be used on plugs or receptacles. Large cable clamps are to be ordered separately (see page 9139). Each jacketed cable seal kit includes:

- Peripheral Seal—to be discarded if kit is used on plug. Additional seals may be purchased (see page 9150)
- Collar—provides bearing surface for back-shell extender
- Jacketed Cable Seal
- Back-Shell Extender
- Special Clamp Saddle—to be used in lieu of clamping insert supplied with large cable clamp

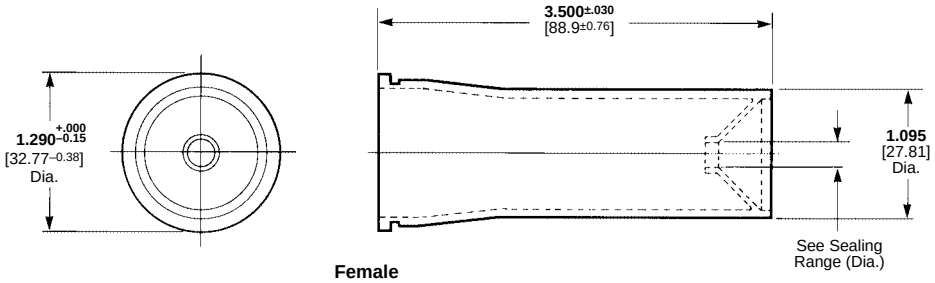

Female

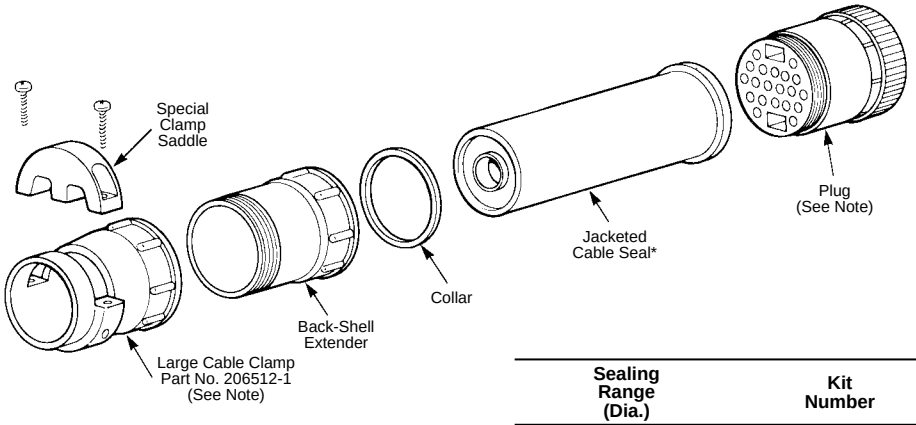

*Jacketed cable seal is pressed flush against rear connector face when back-shell extender is threaded onto rear of connector.

Sealing Range (Dia.)	Kit Number
.300-.450 7.62-11.43	207052-1
.450-.600 11.43-15.24	207052-2
.600-.875 15.24-22.22	207052-3

Rubber Boot

Rubber boots are used with jacketed cable to provide splash-proof connections for Series 1 and Series 3 connectors. (Not for Metal-Shell CPC)

Material:

Black neoprene

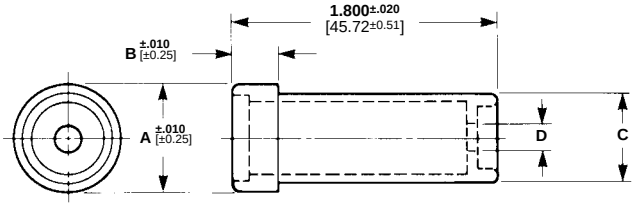

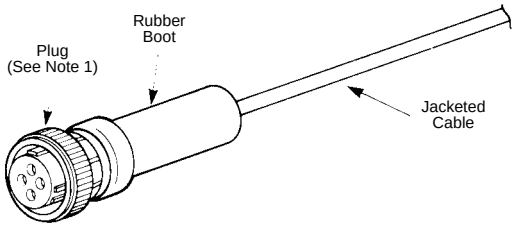

Shell Size	Cable Dia. Sealing Range	Dimensions A	B	C	D	Part Number
11	**.219-.438** 5.56-11.13	**.750** 19.05	**.300** 7.62	**.600** 15.24	**.170** 4.32	206304-1

Notes: 1. Rubber boots are recommended for use with jacketed cable and can be used on plugs or receptacles, except Series 2 connectors.
2. For detailed performance data on rubber boots, refer to AMP Product Specification No. 108-10024.

For complete product information, order Catalog 82021

Products for Industrial & Commercial Applications
Dimensions are shown for reference purposes only.
Dimensions are in inches and millimeters unless otherwise specified. Values in brackets are metric equivalents.
Specifications subject to change.
Technical Support Center
1-800-522-6752
www.tycoelectronics.com

MIL-C-5015 Style Circular Plastic Connectors (CPC)

Product Facts

- **Intermateable with other manufacturers' Metal-Shell Sizes 20-14 and 18-10, MIL-C-5015 Style Connectors**
- **High impact resistant plastic housing**
- **Lighter weight**
- **Lower cost**
- **Industry accepted, Type III+ pin and socket contacts, available on reels in strip-form for high volume, low cost, automatic machine terminations**
- **Contacts also available in loose piece form for low volume, prototype or maintenance and repair**
- **Housing designed to prevent mismating with other insert arrangements**
- **Recognized under the Component Program of Underwriters Laboratories Inc., File No. E28476**
- **Certified by Canadian Standards Association, File No. LR 7189**



This new addition to the AMP Circular Plastic Connector Line is specifically designed to be intermateable with other manufacturers' Metal-Shell sizes 20-14 and 18-10, MIL-C-5015 Style Connector Systems. The high impact resistant plastic housing offers the advantages of lighter weight and lower cost than existing metal shell connectors. In addition, the connector design prevents mismating when used with other insert arrangements. As part of the AMP Multimate Family of Connectors, the MIL-C-5015 style connector offers the additional economies of crimp Type III+ Pin and Socket contacts in reel-mounted, strip-form for high volume automatic machine termination, as well as in loose piece form for low volume, prototype or maintenance and repair.

Technical Documents:

Product Specifications
108-10024 CPC Connectors
108-10042 Contacts, Type III+

Application Specification
114-10004 Contacts, Type III+

Instruction Sheets
408-7582 Accessories for CPC Connectors
408-7592-A Improved Strain Relief Clamps for CPC Connectors
408-7593 CPC Connectors

For complete product information, order Catalog 82021

Products for Industrial & Commercial Applications
Dimensions are shown for reference purposes only.
Dimensions are in inches and millimeters unless otherwise specified. Values in brackets are metric equivalents.
Specifications subject to change.
Technical Support Center
1-800-522-6752
www.tycoelectronics.com

MIL-C-5015 Style Circular Plastic Connectors (CPC), Shell Size 20-14

Plug Kits, Unassembled

Reverse Sex (Accepts pins)
Part Number 213571-2
without Cable Clamp

Standard Sex (Accepts sockets)
Part Number 213652-1
without Cable Clamp

Cable Clamps		O.D.
Part Numbers	Type	Max.
206070-1	standard	**.453** [11.51]
206322-1	large	**.703** [17.86]

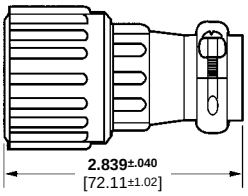

Assembled with Cable Clamp

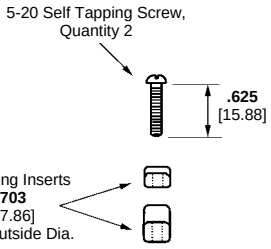

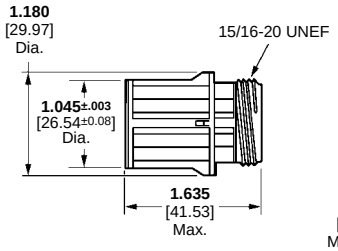

Standard Sex

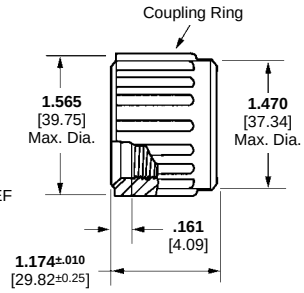

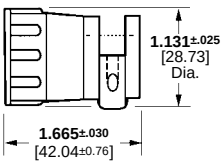

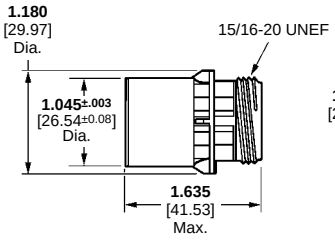

Reverse Sex

Receptacles, Square Flange

Reverse Sex (Accepts sockets)
Part Number 213570-1

Standard Sex (Accepts pins)
Part Number 213651-1

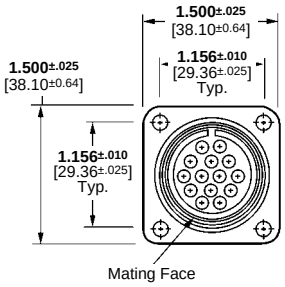

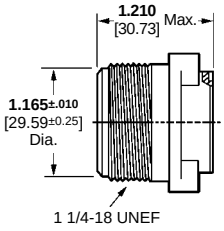

Reverse Sex

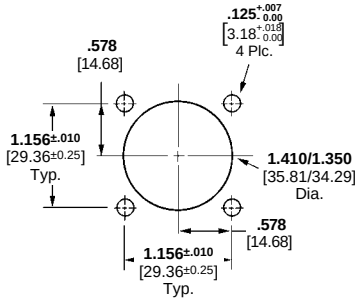

Panel Cutout

Reverse Sex (with .045 [1.14] sq. posted socket contacts loaded in 6 pos.)
Part Number 213928-2

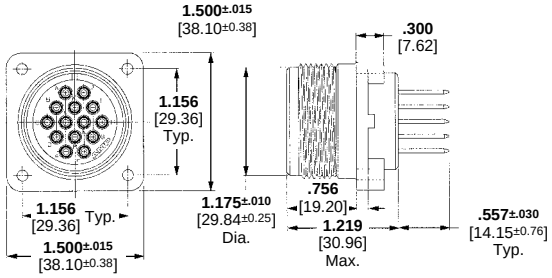

Reverse Sex

Receptacle, Free-Hanging

Reverse Sex (Accepts sockets)
Part Number 213650-1

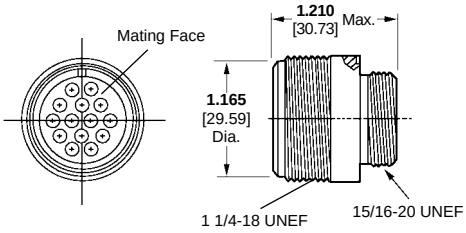

For complete product information, order Catalog 82021

Products for Industrial & Commercial Applications
Dimensions are shown for reference purposes only.
Dimensions are in inches and millimeters unless otherwise specified. Values in brackets are metric equivalents.
Specifications subject to change.
Technical Support Center
1-800-522-6752
www.tycoelectronics.com

MIL-C-5015 Circular Plastic Connectors (CPC), Shell Size 18-10

Plug Kit, Unassembled

Reverse Sex (Accepts pins)
Part Number 213671-1
without Cable Clamp

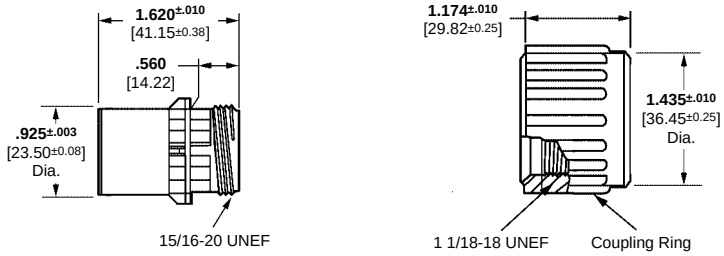

Receptacle, Square Flange

Reverse Sex (Accepts sockets)
Part Number 213667-1

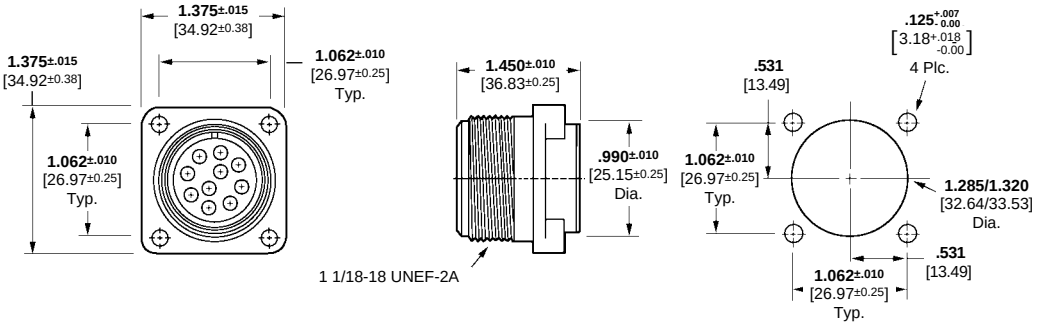

Receptacle, Free-Hanging

Reverse Sex (Accepts sockets)
Part Number 213668-1

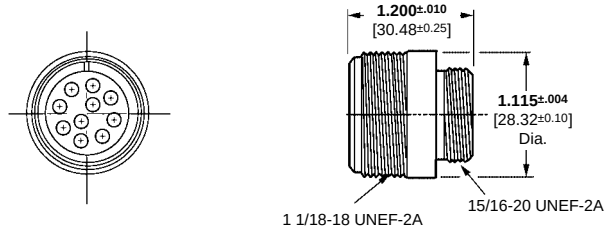

Type III+ Contacts

Material:

Contact—Brass
Spring—Stainless Steel

Contact Finish:

A—.000015 [0.000038] gold on the electrical engagement area over .000030 [0.00076] min. nickel
B—.000030 [0.00076] gold on the electrical engagement area over .000030 [0.00076] min. nickel
C—Tin

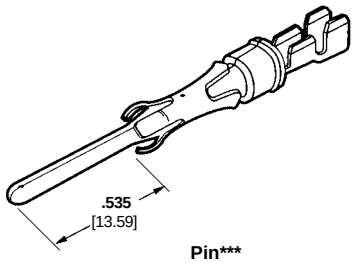

Pin***

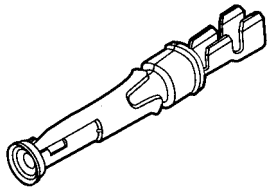
Socket

Wire Size Range AWG	Wire Size Range mm²	Ins. Dia. Range	Contact Finish Code	Strip Form Contact No. Pin	Strip Form Contact No. Socket	Loose Piece Contact No. Pin	Loose Piece Contact No. Socket	Strip Form Applicator	Hand Tool Part Numbers
24-20	0.2-0.6	**.060-.135** 1.52-3.43	C	213605-1	66563-6	213605-2	66565-2	567363-□††	90331-1[5]
			A	—	66563-7	—	66565-3		
			B	213605-5	66563-8	213605-6	66565-4		
18-14	0.8-2	**.110-.150** 2.79-3.812	C	213603-1	66598-1	213603-2	66601-2	466958-1†† (for Sockets) or 567364-□†† or 567834-1†† (for Sockets)	90310-2[5]
			B	213603-3	66598-2	—	—		

††**Note:** Applicators for AMP semiautomatic or fully-automatic termination equipment are available. Contact the Technical Support Center 1-800-522-6752.
***MIL-C-5015 style connectors require a **longer** Multimate **pin contact**. This contact is .145 [3.68] **longer** than the standard Multimate **pin** contacts. It is **not** for use in other Multimate connectors, socket contacts are standard Multimate Type III+ contacts.
Extraction Tool Part Number 305183
Note: Gold-plated contacts should not be mated with tin or silver plated contacts.
[5] To use with the 626 Pneumatic Tool System: remove the crimping head from the Straight Action Hand Tool (SAHT) Assembly, order SAHT Adapter **Part Number** 217201-1, Adapter Holder **Part Number** 356304-1 (with ratchet) or 189928-1 (without), and Power Unit **Part Number** 189721-1 (hand actuated) or 189722-1 (foot actuated).

For complete product information, order Catalog 82021

Metal-Shell Circular Plastic Connectors

Product Facts

- **Economical combination of thermoplastic UL 94V-0 rated connector housings and metal shells**
- **Available in four Series:**
  - **Series 1–Accepts Multimate contacts, shell sizes 14-5, 14-7, 22-16, 28-24, and 28-37 standard sex; 14-5, 14-7, 22-14, and 28-37 reverse sex**
  - **Series 2–Accepts 20 DF and 20 DM contacts, shell sizes 22-28 and 28-63 standard sex; 22-28 and 28-57 reverse sex**
  - **Series 3–Accepts Type XII power contacts, shell sizes 22-3 and 28-7 standard and reverse sex**
  - **Series 4–Accepts Multimate contacts, and Type XII power contacts, shell size 28-16M and 28-22M standard sex**
- **Compatible with MIL Spec metal housing type connectors**
- **Choice of application tooling to meet all production requirements**



AMP Metal-Shell Circular Plastic Connectors offer the reliability of higher priced all metal connectors at a fraction of the cost, and are offered in the more popular contact configurations.

Connector housings are made of lightweight, sturdy, thermoplastic material that are UL 94V-0 rated, with zinc alloy, nickel plated shells for added strength and protection. These connectors are available in a variety of configurations to meet your signal, low current and high current requirements. Operating temperatures range from -55°C to +125°C.

Signal and low current is provided by a choice of AMP Multimate contacts: .062 [1.57] pin diameter and 20 DF and 20 DM contacts, .040 [1.02] pin diameter. High current requirements are met by the Type XII capable of carrying up to 35 amperes of current.

These quick connect/ disconnect circular connectors feature polarized housings to prevent mismating with other insert arrangements.

AMP Metal-Shell Circular Plastic Connectors are available in square flange receptacles and free-hanging plug connectors.

For additional economy, industry accepted AMP Type III+ pin and socket contacts are available on reels in strip-form for high volume, low cost, automatic machine terminations. For low volume, prototype or maintenance and repair Type III+ contacts are also available in loose piece form.

For complete product information, order Catalog 82021

Products for Industrial & Commercial Applications

Dimensions are shown for reference purposes only.

Dimensions are in inches and millimeters unless otherwise specified. Values in brackets are metric equivalents.

Specifications subject to change.

Technical Support Center
1-800-522-6752
www.tycoelectronics.com

Metal-Shell Circular Plastic Connectors, Series 1

Metal-Shell CPC Connectors, Series 1, Standard Sex



Listed part numbers are for connectors only; **contacts must be ordered separately.**

Material and Finish:

Square Flange Receptacle—
Housing—Thermoplastic, UL 94V-0 rated, black
Metal-Shell—Zinc alloy, plated nickel
Grooved Pin—Steel alloy, plated nickel
Plug—
Housing—Thermoplastic, UL 94V-0 rated, black
Metal-Shell—Zinc alloy, plated nickel
Tetraseal Seal—Fluorocarbon
Retainer Ring—Stainless steel
Coupling Ring—Zinc alloy, plated nickel

Related Product Data:

Contacts—pages 9101-9103, 9105, 9109
Contact Arrangements—page 9159
Component Dimensions—page 9168
Accessories—page 9169
Performance Characteristics—page 9122

Technical Documents: page 9119

Tetraseal Seal

(Installed in plugs only.)

The Tetraseal Seal provides splash-proof sealing between mating metal shells. It is located behind the plug shell external keys (under the coupling ring). When mated with a receptacle, the seal is compressed against the inside diameter of the mating end edge of the receptacle shell.

Square Flange Receptacles

(Accepts Multimate Pins)

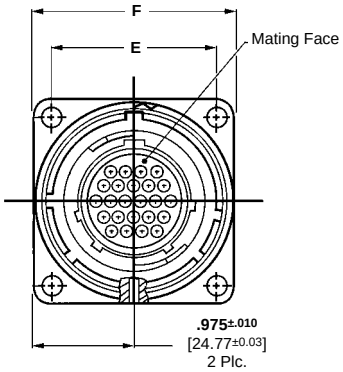

Plugs

(Accepts Multimate Sockets)

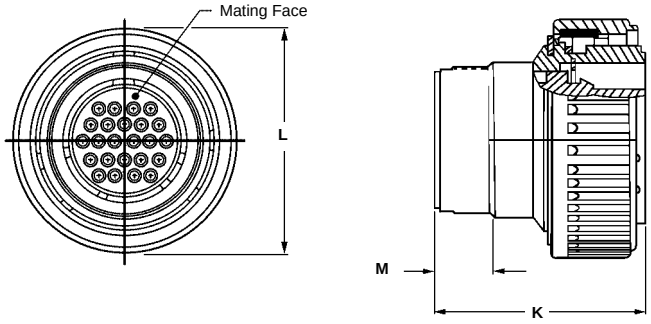

Arrangement	Square Flange Receptacle	Plug Part Numbers	
		without Tetraseal Seal	with Tetraseal Seal
14-5	208719-1	208718-1	208718-2
14-7	208715-1	208714-1	208714-2
22-16	208489-1	208488-1	208488-3
28-24	208459-1	208457-1	208457-3
28-37	208471-1	208470-1	208470-3

Note: Maximum wire insulation diameter is .100 [2.54], except arrangements 14-5 and 28-24 are .150 [3.81] max.

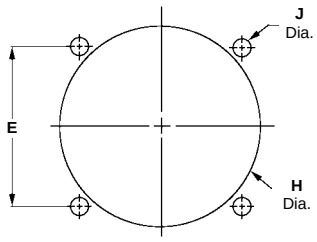

Rear Mount Panel Cutout

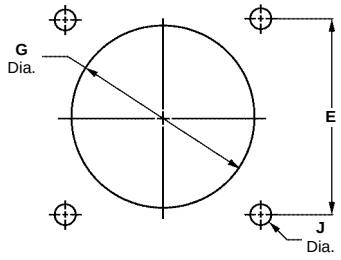

Front Mount Panel Cutout

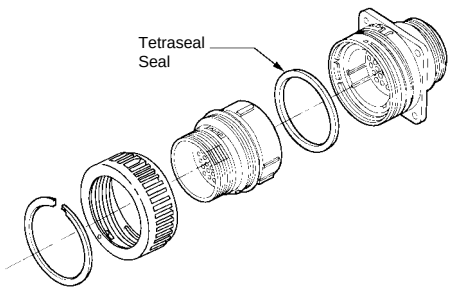

For complete product information, order Catalog 82021

Products for Industrial & Commercial Applications
Dimensions are shown for reference purposes only.
Dimensions are in inches and millimeters unless otherwise specified. Values in brackets are metric equivalents.
Specifications subject to change.
Technical Support Center
1-800-522-6752
www.tycoelectronics.com

Metal-Shell Circular Plastic Connectors, Series 1

Metal-Shell CPC Connectors, Series 1, Reverse Sex



Listed part numbers are for connectors only; **contacts must be ordered separately.**

Material and Finish:

Square Flange Receptacle—
Housing—Thermoplastic, UL 94V-0 rated, black
Metal-Shell—Zinc alloy, plated nickel
Grooved Pin—Steel alloy, plated nickel
Plug—
Housing—Thermoplastic, UL 94V-0 rated, black
Metal-Shell—Zinc alloy, plated nickel
Tetraseal Seal—Fluorocarbon
Retainer Ring—Retainer Ring
Coupling Ring—Zinc alloy, plated nickel

Related Product Data:

Contacts—pages 9101-9103, 9105, 9109
Contact Arrangement—page 9159
Component Dimensions—page 9168
Accessories—page 9169
Performance Characteristics—page 9122

Technical Documents: page 9119

Tetraseal Seal

(Installed in plugs only.)

The Tetraseal Seal provides splash-proof sealing between mating metal shells. It is located behind the plug shell external keys (under the coupling ring). When mated with a receptacle, the seal is compressed against the inside diameter of the mating end edge of the receptacle shell.

Square Flange Receptacles

(Accepts Multimate Sockets)

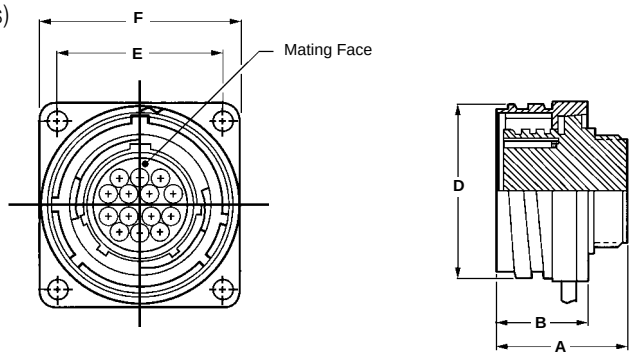

Plugs

(Accepts Multimate Pins)

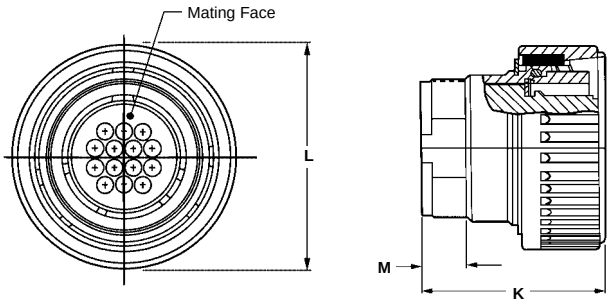

Arrangement	Square Flange Receptacle	Plug Part Numbers	
		without Tetraseal Seal	with Tetraseal Seal
14-5	208721-1	208720-1	—
14-7	208717-1	208716-1	208716-2
22-14	208487-1	208486-1	208486-3
28-37	208473-1	208472-1	208472-3

Note: Maximum wire insulation diameter is .100 [2.54], except arrangements 14-5 and 28-24 are .150 [3.81] max.

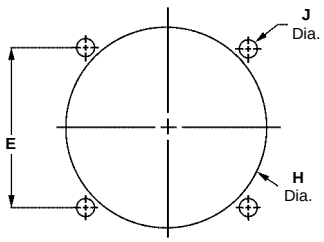

Rear Mount Panel Cutout

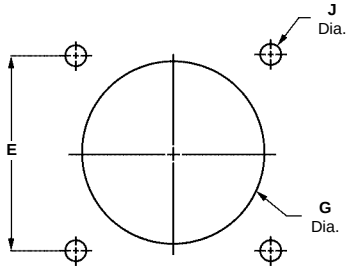

Front Mount Panel Cutout

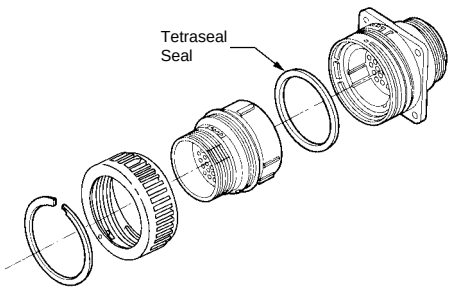

For complete product information, order Catalog 82021

Products for Industrial & Commercial Applications
Dimensions are shown for reference purposes only.
Dimensions are in inches and millimeters unless otherwise specified. Values in brackets are metric equivalents.
Specifications subject to change.
Technical Support Center
1-800-522-6752
www.tycoelectronics.com

Metal-Shell CPC Connectors, Series 1, Contact Arrangements

Shell Size 14

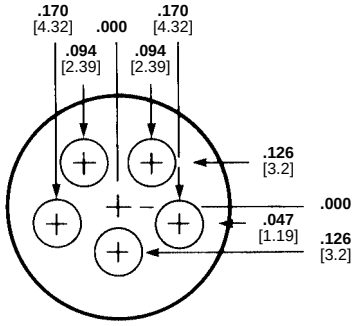

Arrangement 14-5
Max. Wire Ins. Dia. = .150 [3.81]

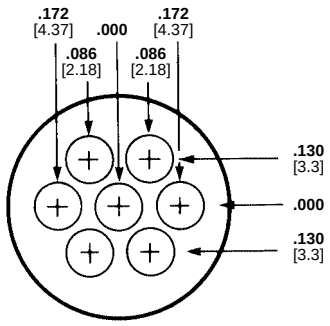

Arrangement 14-7
Max. Wire Ins. Dia. = .100 [2.54]

Shell Size 22

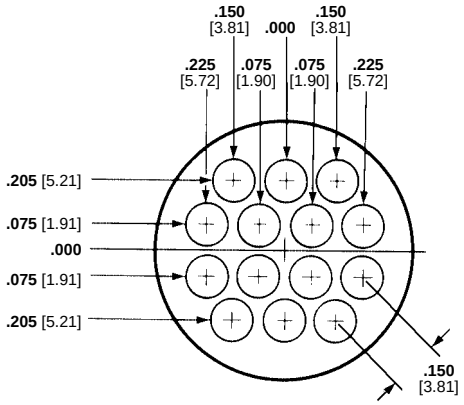

Arrangement 22-14
Max. Wire Ins. Dia. = .100 [2.54]

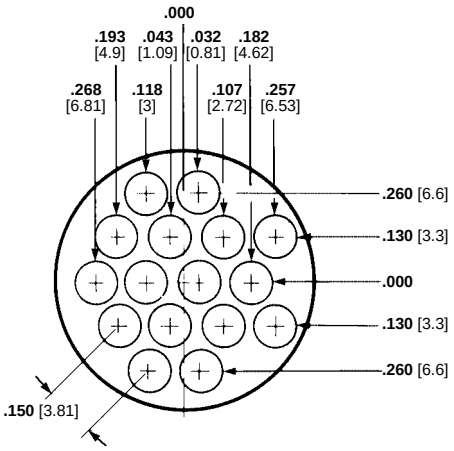

Arrangement 22-16
Max. Wire Ins. Dia. = .100 [2.54]

Note: Contact arrangements shown are of pin mating face (plug or receptacle). Socket mating face is mirror image.

Shell Size 28

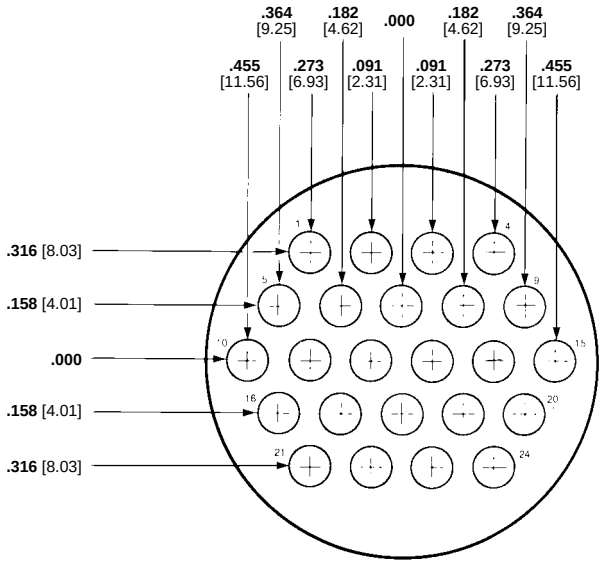

Arrangement 28-24
Max. Wire Ins. Dia. = .150 [3.81]

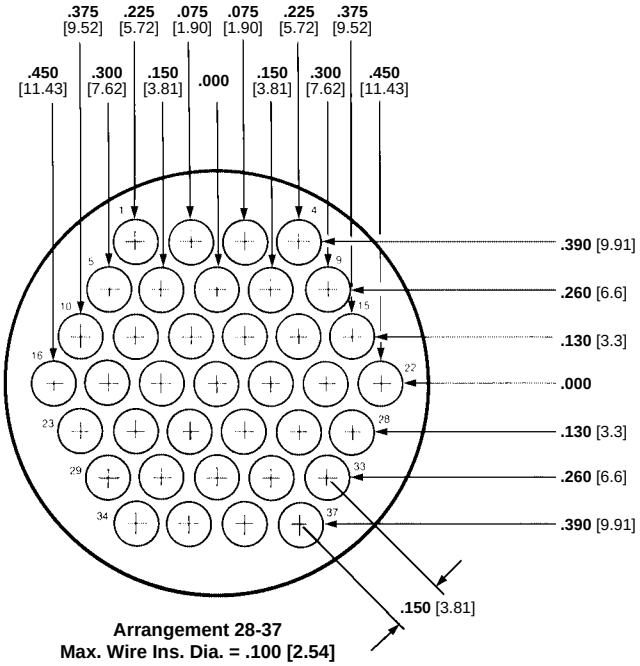

Arrangement 28-37
Max. Wire Ins. Dia. = .100 [2.54]

For complete product information, order Catalog 82021

Metal-Shell Circular Plastic Connectors, Series 2

Metal-Shell CPC Connectors, Series 2, Standard Sex



Listed part numbers are for connectors only; **contacts must be ordered separately.**

Material and Finish:

Square Flange Receptacle—
Housing and Retention Insert—Thermoplastic, UL 94V-0 rated, black
Metal-Shell—Zinc alloy, plated nickel
Grooved Pin—Steel alloy, plated nickel
Plug—
Housing—Thermoplastic, UL 94V-0 rated, black
Metal-Shell—Zinc alloy, plated nickel
Tetraseal Seal—Fluorocarbon
Retainer Ring—Stainless steel
Coupling Ring—Zinc alloy, plated nickel

Related Product Data:

Contacts—pages 9106, 9107
Contact Arrangements—page 9162
Component Dimensions—page 9168
Accessories—page 9169
Performance Characteristics—page 9122

Technical Documents: page 9119

Square Flange Receptacles
(Accepts 20 DF and 20 DM Pins)

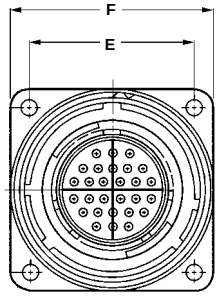

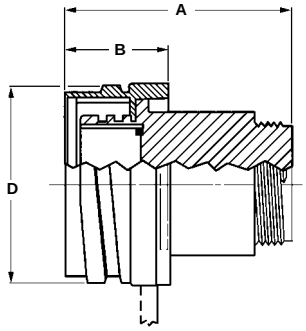

Plugs
(Accepts 20 DF and 20 DM Sockets)

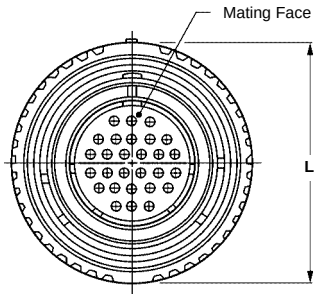

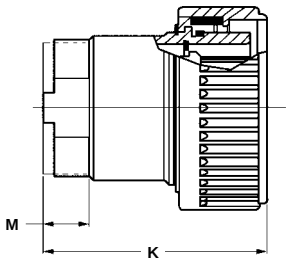

Arrangement	Part Number	
	Square Flange Receptacle	Plug without Tetraseal Seal
22-28	208491-1	208490-1
28-63	208477-1	208476-1

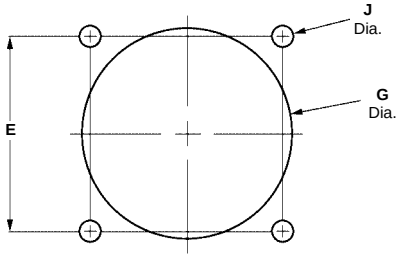

Recommended Panel Cutout

For complete product information, order Catalog 82021

Products for Industrial & Commercial Applications
Dimensions are shown for reference purposes only.
Dimensions are in inches and millimeters unless otherwise specified. Values in brackets are metric equivalents.
Specifications subject to change.
Technical Support Center
1-800-522-6752
www.tycoelectronics.com

Metal-Shell Circular Plastic Connectors, Series 2

Metal-Shell CPC Connectors, Series 2, Reverse Sex



Listed part numbers are for connectors only; **contacts must be ordered separately.**

Material and Finish:

Square Flange Receptacle—
Housing and Retention Insert—Thermoplastic, UL 94V-0 rated, black
Metal-Shell—Zinc alloy, plated nickel
Grooved Pin—Steel alloy, plated nickel
Plug—
Housing—Thermoplastic, UL 94V-0 rated, black
Metal-Shell—Zinc alloy, plated nickel
Tetraseal Seal—Fluorocarbon
Retainer Ring—Stainless steel
Coupling Ring—Zinc alloy, plated nickel

Related Product Data:

Contacts—pages 9106, 9107
Contact Arrangements—page 9162
Component Dimensions—page 9168
Accessories—page 9169
Performance Characteristics—page 9122

Technical Documents: page 9119

Square Flange Receptacles

(Accepts 20 DF and 20 DM Sockets)

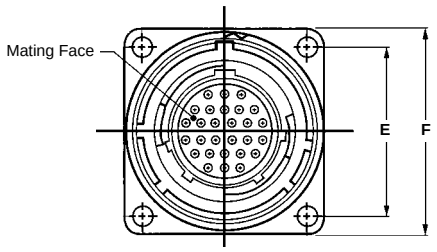

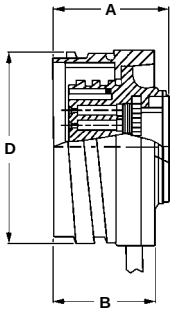

Plugs

(Accepts 20 DF and 20 DM Pins)

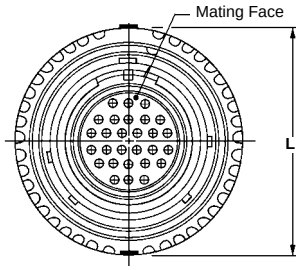

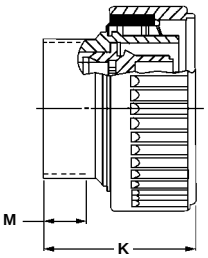

Arrangement	Part Number	
	Square Flange Receptacle	Plug without Tetraseal Seal
22-28	208493-1	208492-1
28-57	208475-1	208474-1

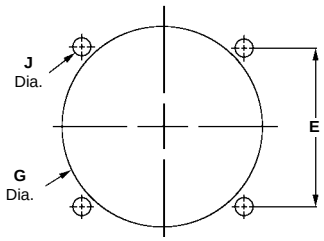

Rear Mount Panel Cutout

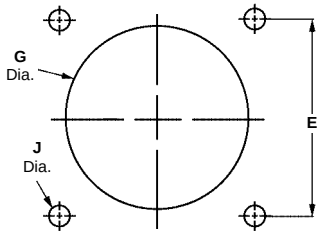

Front Mount Panel Cutout

For complete product information, order Catalog 82021

Metal-Shell CPC Connectors, Series 2, Contact Arrangements

Shell Size 22

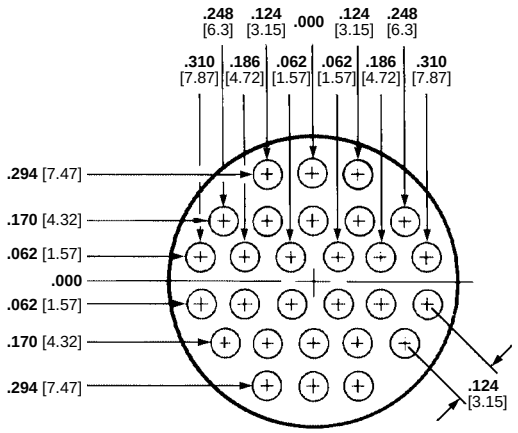

Arrangement 22-28
Max. Wire Ins. Dia. = .068 [1.73]

Shell Size 28

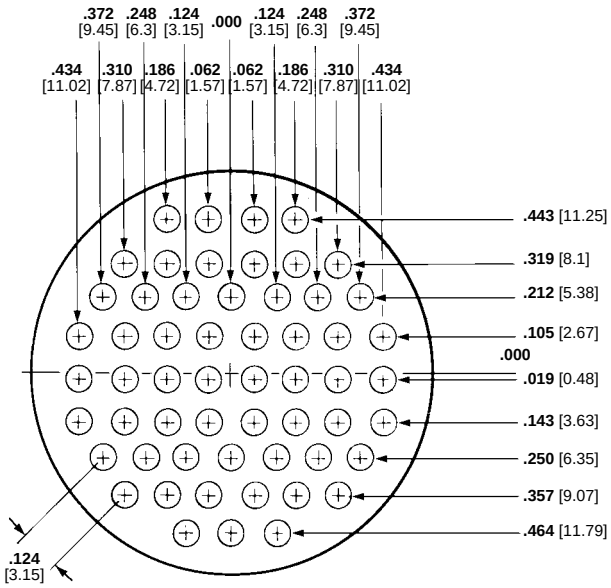

Arrangement 28-57
Max. Wire Ins. Dia. = .068 [1.73]

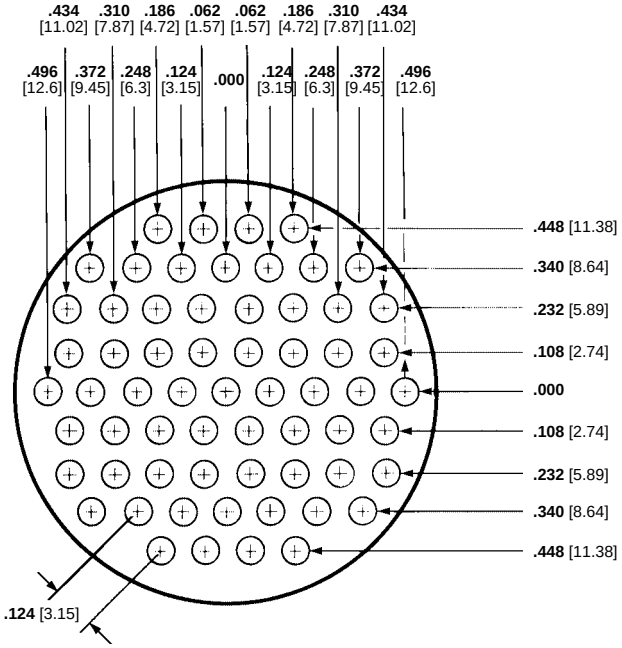

Arrangement 28-63
Max. Wire Ins. Dia. = .068 [1.73]

Note: Contact arrangements shown are of pin mating face (plug or receptacle). Socket mating face is mirror image.

Metal-Shell Circular Plastic Connectors, Series 3

Metal-Shell CPC Connectors, Series 3, Standard Sex



Listed part numbers are for connectors only; **contacts must be ordered separately.**

Material and Finish:

Square Flange Receptacle—
Housing—Thermoplastic, UL 94V-0 rated, black
Metal-Shell—Zinc alloy, plated nickel
Peripheral Seal—Elastomer, grey
Grooved Pin—Stainless steel
Plug—
Housing—Thermoplastic, UL 94V-0 rated, black
Metal-Shell—Zinc alloy, plated nickel
Tetraseal Seal—Fluorocarbon
Retainer Rings—Stainless Steel
Coupling Ring—Zinc alloy, plated nickel

Related Product Data:

Contacts—pages 9114, 9115
Contact Arrangements—page 9165
Component Dimensions—page 9168
Accessories—page 9169
Performance Characteristics—page 9122

Technical Documents: page 9119

Tetraseal Seal

(Installed in Plugs only)

The Tetraseal Seal provides splash-proof sealing between connector metal-shells. It is located behind the plug-shell external keys (under the coupling ring). When mated with a receptacle, the seal is compressed against the inside diameter of the mating end edge of the receptacle shell.

Square Flange Receptacles

(Accepts Type XII Male Pins)

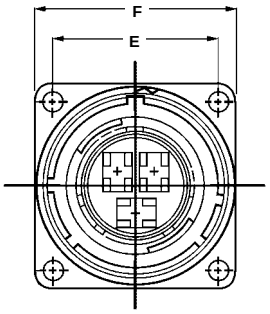

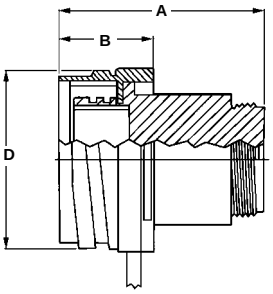

Plugs

(Accepts Type XII Female Sockets)

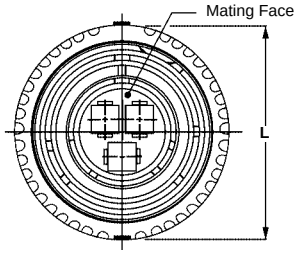

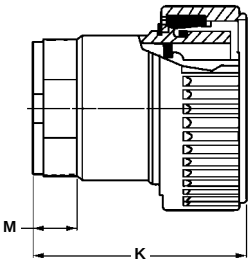

Arrangement	Square Flange Receptacle	Plug Part Number	
		without Tetraseal Seal	with Tetraseal Seal
22-3	208495-1	208494-1	208494-3
28-7	208483-1	208482-1	—

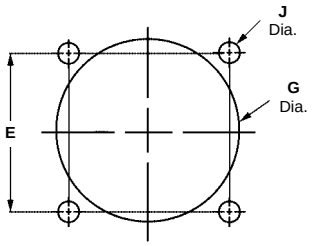

Recommended Panel Cutout

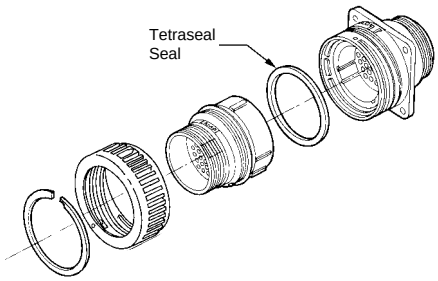

For complete product information, order Catalog 82021

Products for Industrial & Commercial Applications
Dimensions are shown for reference purposes only.
Dimensions are in inches and millimeters unless otherwise specified. Values in brackets are metric equivalents.
Specifications subject to change.
Technical Support Center
1-800-522-6752
www.tycoelectronics.com

Metal-Shell Circular Plastic Connectors, Series 3

Metal-Shell CPC Connectors, Series 3, Reverse Sex



Listed part numbers are for connectors only; **contacts must be ordered separately.**

Material and Finish:

Square Flange Receptacle—
Housing—Thermoplastic, UL 94V-0 rated, black
Metal-Shell—Zinc alloy, plated nickel
Peripheral Seal—Elastomer, grey
Grooved Pin—Stainless steel
Plug—
Housing—Thermoplastic, UL 94V-0 rated, black
Metal-Shell—Zinc alloy, plated nickel
Tetraseal Seal—Fluorocarbon
Retainer Rings—Stainless Steel
Coupling Ring—Zinc alloy, plated nickel

Related Product Data:

Contacts—pages 9114, 9115
Contact Arrangements—page 9165
Component Dimensions—page 9168
Accessories—page 9169
Performance Characteristics—page 9122

Technical Documents: page 9119

Tetraseal Seal

(Installed in Plugs only)

The Tetraseal Seal provides splash-proof sealing between connector metal-shells. It is located behind the plug-shell external keys (under the coupling ring). When mated with a receptacle, the seal is compressed against the inside diameter of the mating end edge of the receptacle shell.

Square Flange Receptacles

(Accepts Type XII Female Sockets)

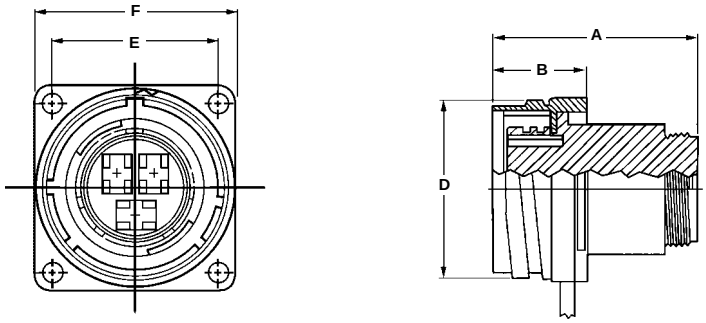

Plugs

(Accepts Type XII Male Pins)

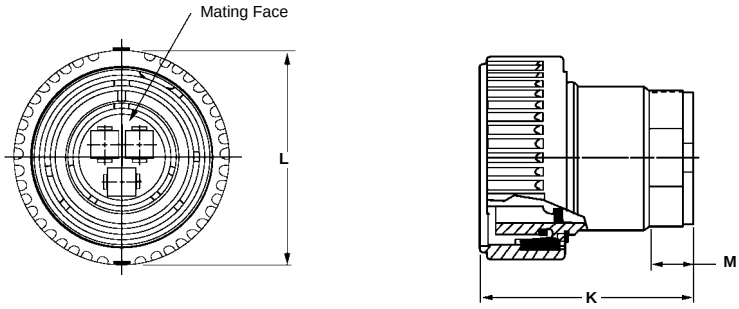

Arrangement	Square Flange Receptacle	Plug Part Number	
		without Tetraseal Seal	with Tetraseal Seal
22-3	208497-1 208497-2[1]	208496-1	—
28-7	208485-1	208484-1	208484-3

[1] With peripheral seal

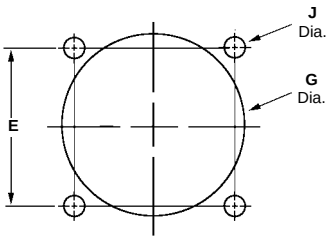

Recommended Panel Cutout

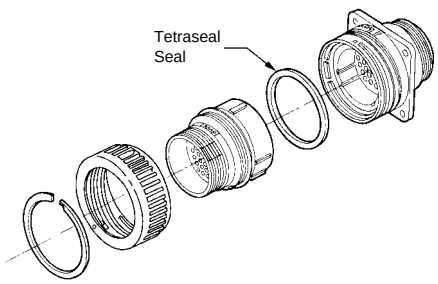

For complete product information, order Catalog 82021

Products for Industrial & Commercial Applications
Dimensions are shown for reference purposes only.
Dimensions are in inches and millimeters unless otherwise specified. Values in brackets are metric equivalents.
Specifications subject to change.
Technical Support Center
1-800-522-6752
www.tycoelectronics.com

Metal-Shell CPC Connectors, Series 3, Contact Arrangements

Shell Size 22

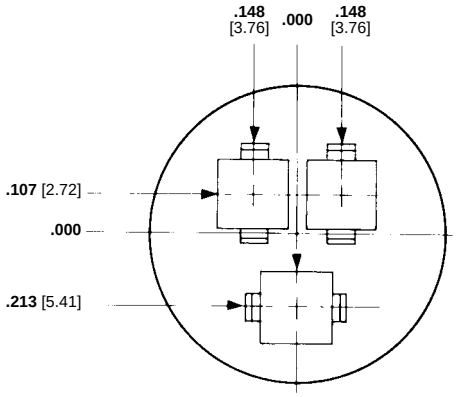

Arrangement 22-3
Max. Wire Ins. Dia. = .220 [5.59]

Shell Size 28

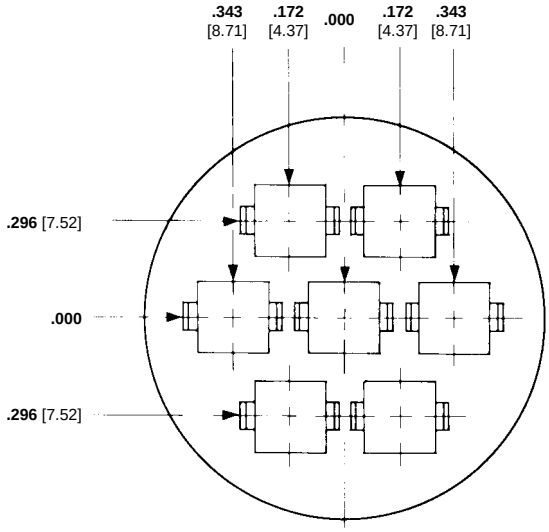

Arrangement 28-7
Max. Wire Ins. Dia. = .220 [5.59]

Note: Contact arrangements shown are of pin mating face (plug or receptacle). Socket mating face is mirror image.

Metal-Shell Circular Plastic Connectors, Series 4

Metal-Shell CPC Connectors, Series 4, Standard Sex



Listed part numbers are for connectors only; **contacts must be ordered separately.**

Material and Finish:

Square Flange Receptacle—
Housing—Thermoplastic, UL 94V-0 rated, black
Metal-Shell—Zinc alloy, plated nickel
Grooved Pin—Stainless steel
Plug—
Housing—Thermoplastic, UL 94V-0 rated, black
Metal-Shell—Zinc alloy, plated nickel
Tetraseal Seal—Fluorocarbon
Retainer Rings—Stainless Steel
Coupling Ring—Zinc alloy, plated nickel

Related Product Data:

Contacts—pages 9101-9103, 9105, 9109, 9114-9117
Contact Arrangements—page 9167
Component Dimensions—page 9168
Accessories—page 9169
Performance Characteristics—page 9122

Technical Documents: page 9119

Tetraseal Seal

(Installed in Plugs only)

The Tetraseal Seal provides splash-proof sealing between connector metal-shells. It is located behind the plug-shell external keys (under the coupling ring). When mated with a receptacle, the seal is compressed against the inside diameter of the mating end edge of the receptacle shell.

Square Flange Receptacles

(Accepts Type XII Male and Multimate Pins)

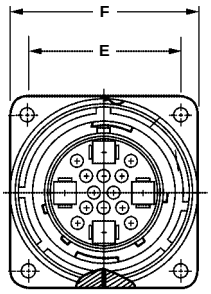

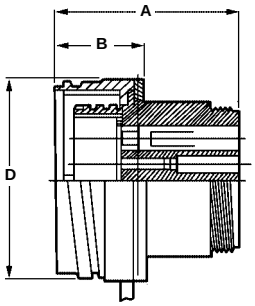

Plugs

(Accepts Type XII Female and Multimate Sockets)

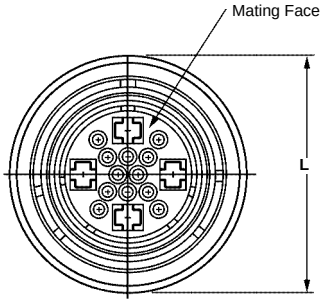

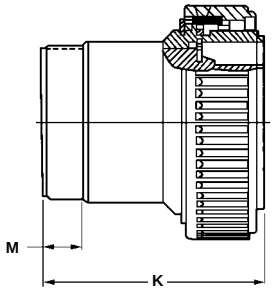

Arrangement	Square Flange Receptacle	Plug Part Numbers	
		without Tetraseal Seal	with Tetraseal Seal
28-16M	208479-1	208478-1	208478-3
28-22M	208481-1	208480-1	208480-3

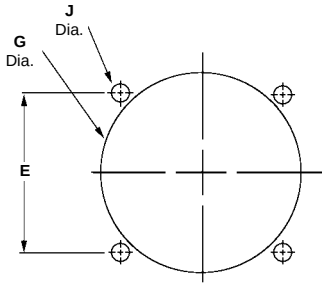

Rear Mount Panel Cutout

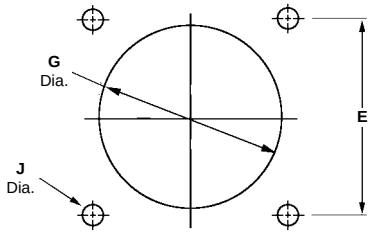

Front Mount Panel Cutout

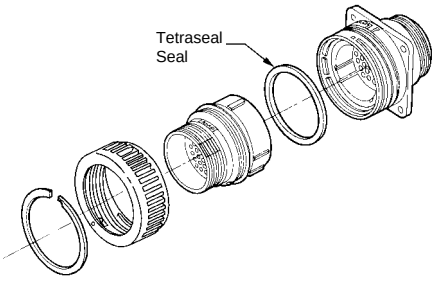

For complete product information, order Catalog 82021

Metal-Shell CPC Connectors, Series 4, Contact Arrangements

Shell Size 28

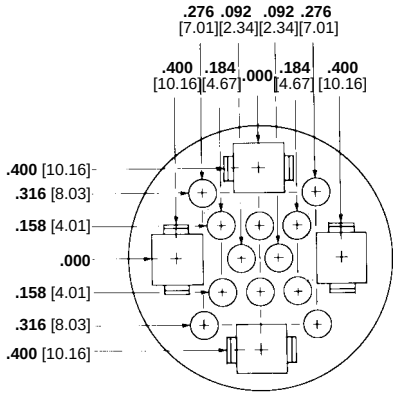

Arrangement 28-16M
Max. Wire Ins. Dia. =
.150 [3.81] for Multimate Contacts,
.220 [5.59] for Power Contacts

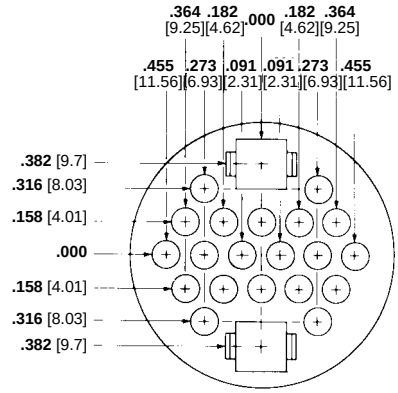

Arrangement 28-22M
Max. Wire Ins. Dia. =
.150 [3.81] for Multimate Contacts,
.220 [5.59] for Power Contacts

Note: Contact arrangements shown are of pin mating face (plug or receptacle). Socket mating face is mirror image.

Metal-Shell CPC Connectors Component Dimensions

Square Flange Receptacles

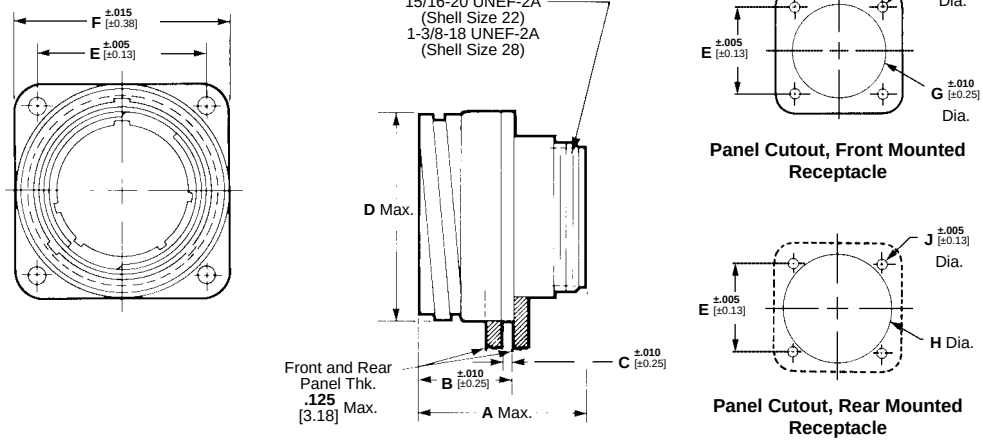

Plugs

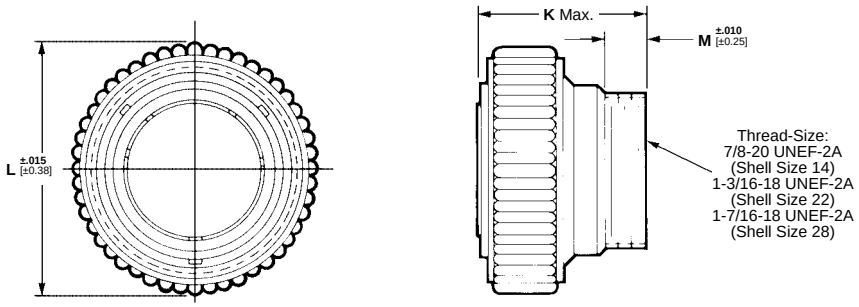

Series	Arrangement No.	Sex	Dimensions											
			A	B	C	D	E	F	G	H	J	K	L	M
1	14-5	Std.	**1.415** 35.94	**.745** 18.92	**.100** 2.54	**1.031** 26.19	**.906** 23.01	**1.185** 30.1	**1.070** 27.18	**1.070** 27.18	**.125** 3.18	**1.400** 35.56	**1.225** 31.12	**.380** 9.65
		Rev.												
	14-7	Std.	**1.415** 35.94	**.745** 18.92	**.100** 2.54	**1.031** 26.19	**.906** 23.01	**1.185** 30.1	**1.070** 27.18	**1.070** 27.18	**.125** 3.18	**1.400** 35.56	**1.225** 31.12	**.380** 9.65
		Rev.												
	22-14	Rev.	**1.190** 30.22	**.790** 20.07	**.103** 2.62	**1.503** 38.18	**1.250** 31.75	**1.534** 38.96	**1.156** 29.36	**1.554** 39.47	**.120** 3.05	**1.560** 39.62	**1.750** 44.45	**.380** 9.65
	22-16	Std.	**1.470** 37.34	**.790** 20.07	**.103** 2.62	**1.503** 38.18	**1.250** 31.75	**1.534** 38.96	**1.156** 29.36	**1.554** 39.47	**.120** 3.05	**1.265** 32.13	**1.750** 44.45	**.380** 9.65
	28-24	Std.	**1.555** 39.5	**.875** 22.23	**.125** 3.18	**1.900** 48.26	**1.562** 39.67	**1.950** 49.53	**1.610** 40.89	**1.970** 50.04	**.145** 3.68	**1.560** 39.62	**2.170** 55.12	**.380** 9.65
	28-37	Std.	**1.540** 39.12	**.875** 22.23	**.125** 3.18	**1.900** 48.26	**1.562** 39.67	**1.950** 49.53	**1.610** 40.89	**1.970** 50.04	**.145** 3.68	**1.560** 39.62	**2.170** 55.12	**.380** 9.65
		Rev.	**1.260** 31.00									**1.840** 46.74		
2	22-28	Std.	**.934** 23.72	**.790** 20.07	**.103** 2.62	**1.503** 38.18	**1.250** 31.75	**1.534** 38.96	**1.156** 29.36	**1.554** 39.47	**.120** 3.05	**1.295** 32.89	**1.750** 44.45	**.380** 9.65
		Rev.												
	28-57	Rev.	**1.229** 31.22	**.875** 22.22	**.125** 3.18	**1.900** 48.26	**1.562** 39.67	**1.950** 49.53	**1.610** 40.89	**1.970** 50.04	**.145** 3.68	**1.408** 35.76	**2.170** 55.12	**.380** 9.65
	28-63	Std.	**1.229** 31.22	**.875** 22.22	**.125** 3.18	**1.900** 48.26	**1.562** 39.67	**1.950** 49.53	**1.610** 40.89	**1.970** 50.04	**.145** 3.68	**1.408** 35.76	**2.170** 55.12	**.380** 9.65
3	22-3	Std.	**1.755** 44.58	**.790** 20.07	**.103** 2.62	**1.503** 38.18	**1.250** 31.75	**1.534** 38.96	**1.156** 29.36	**1.554** 39.47	**.120** 3.05	**1.805** 45.85	**1.750** 44.45	**.380** 9.65
		Rev.												
	28-7	Std.	**1.825** 46.36	**.875** 22.22	**.125** 3.18	**1.900** 48.26	**1.562** 39.67	**1.950** 49.53	**1.610** 40.89	**1.970** 50.04	**.145** 3.68	**2.125** 53.98	**2.170** 55.12	**.380** 9.65
		Rev.												
4	28-13M	Std.	**1.825** 46.36	**.875** 22.22	**.125** 3.18	**1.900** 48.26	**1.562** 39.67	**1.950** 49.53	**1.610** 40.89	**1.970** 50.04	**.145** 3.68	**2.125** 53.98	**2.170** 55.12	**.380** 9.65
	28-16M	Std.	**1.825** 46.36	**.875** 22.22	**.125** 3.18	**1.900** 48.26	**1.562** 39.67	**1.950** 49.53	**1.610** 40.89	**1.970** 50.04	**.145** 3.68	**2.125** 53.98	**2.170** 55.12	**.380** 9.65
	28-22M	Std.	**1.825** 46.36	**.875** 22.22	**.125** 3.18	**1.900** 48.26	**1.562** 39.67	**1.950** 49.53	**1.610** 40.89	**1.970** 50.04	**.145** 3.68	**2.125** 53.98	**2.170** 55.12	**.380** 9.65

For complete product information, order Catalog 82021

Products for Industrial & Commercial Applications
Dimensions are shown for reference purposes only.
Dimensions are in inches and millimeters unless otherwise specified. Values in brackets are metric equivalents.
Specifications subject to change.
Technical Support Center
1-800-522-6752
www.tycoelectronics.com

Metal-Shell CPC Connector Accessories

Cable Clamps

Material and Finish:

Body and Clamp Halves—Zinc alloy, nickel plated

Screws and Washers—Stainless steel

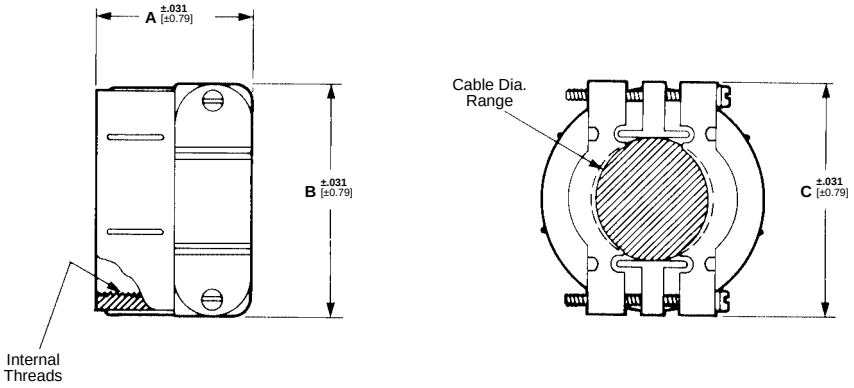

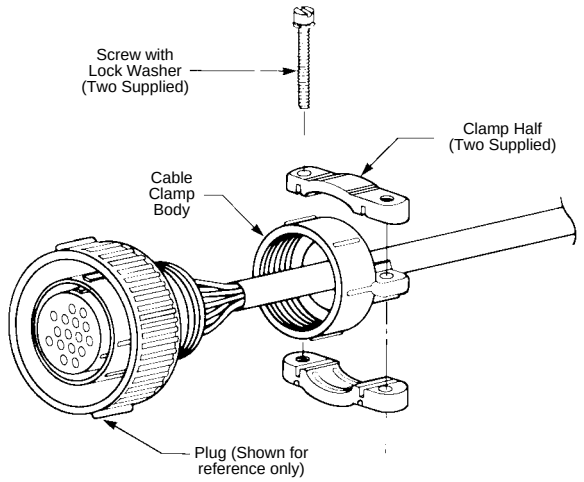

Shell Size	Dimensions A	B	C	Cable O.D. Range	Thread Size	Part Numbers
14	**.938** 23.83	**1.175** 29.85	**1.165** 29.59	**.225-.562** 5.71-14.27	7/8-20 UNEF-3B	208945-5
22	**.938** 23.83	**1.432** 36.37	**1.469** 37.31	**.325-.750** 8.26-19.05	1-3/16-18 UNEF-3B	208945-7
28	**1.031** 26.19	**1.593** 40.46	**1.688** 42.88	**.450-.938** 11.43-23.83	1-7/16-18 UNEF-3B	208945-8

Notes: 1. For Shell Size 22 Receptacle use plastic cable clamp Size 17 (See page 9139), for Shell Size 28 Receptacle use plastic cable clamp Size 23 (See pages 9139, 9140). Use Size 14 metal cable clamp for both plug and receptacle Size 14 connectors.
2. Metal cable clamps (Sizes 22 and 28) are for use with Metal-Shell CPC plugs ONLY.

Protective Cap Assemblies (for Metal-Shell CPC Receptacles Only)

Material and Finish:

Zinc alloy, nickel plated

Shell Size	Dimensions A	B	Part Numbers
14	**1.225** 31.11	**.515** 13.08	213823-2
22	**1.750** 44.45	**.635** 16.13	211903-1
28	**2.170** 55.12	**.635** 16.13	211904-1

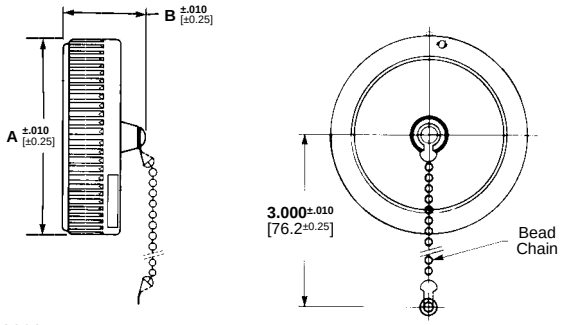

For complete product information, order Catalog 82021

Introduction

High Density Circular Connectors

Product Facts

- **High density, lightweight Multi-Pin features a crimp contact retention method, requiring no insertion or removal tools**
- **Reverse gender available**
- **Ideal for harsh environment**
- **Sealed – Silicon rubber grommet/o-ring**
- **Unsealed – No grommet/ o-ring**
- **Meets Mil Standards (high quality) but is not QPL'd**
- **Ideally suited to applications where many conductors must be accommodated in a minimum of space with minimum weight**



Our high density, lightweight Multi-Pin Circular Connectors are the industry's most advanced and are ideally suited to applications where many conductors must be accommodated in a minimum of space with minimum weight.

All series of connectors feature a crimp contact retention method, requiring no insertion or removal tools.

The MARC 43 connector conforms to all applicable performance requirements of MIL-C-26482 and has seen extensive service on many of the nation's leading aerospace and ground support equipment programs.

The MARC 53 connector, designed to conform to the USAF high reliability specification, MIL-C-38300, offers the ultimate in high density connector performance. The "Posilock" coupling mechanism, combined with our exclusive floating interfacial seal, "Posiseal", offers outstanding performance under most rigorous service conditions.

The MARC 63 connector, our Bayonet Coupling Series, accommodates all insert patterns and layouts available in the MARC 43 connector, MARC 53 connector, and RMD Series.

All insert assemblies are completely interchangeable. Lighter in weight and smaller in size than any comparable connector on the market, it requires up to 50% less engagement/separation force. Conversion to bayonet coupling shell from MARC 43 connector or MARC 53 connector is done without tools by merely transferring the contacts and insert assemblies into the MARC 63 connector shell.

The newest addition to the Multi-Pin product line is the MARC 73 connector series. The TWIST/CON Circular Connector combines

For complete product information, order Catalog 1308638

Products for Industrial & Commercial Applications

Dimensions are shown for reference purposes only.

Dimensions are in inches and millimeters unless otherwise specified. Values in brackets are metric equivalents.

Specifications subject to change.

Technical Support Center
1-800-522-6752
www.tycoelectronics.com

Introduction

the lightweight, bayonet coupling feature of the MARC 63 Connector Series with the TWIST/CON high density, center-to-center contact spacing of 0.065 [1.65]. The utilization of the No. 22 TWIST/CON pin and socket contacts provides for 50% greater contact densities than presently offered in the MARC 43, MARC 53, or MARC 63 Connector Series.

Hermetic connectors—widely accepted in the industry—feature crimp contacts and are available in the MARC 43, MARC 53, and MARC 63 Connector Series. The latest additions to the Hermetic connector product line include the high pressure, bulkhead feed-through connector ideally suited for nuclear applications and the new MTPH Series designed to withstand environmental pressure differentials exceeding 10,000 psi and an ambient temperature of 260°F. Consult Tyco Electronics for detailed information.



SHM Receptacle
MARC 43 & MARC 53



Mated MARC 53
Connector Series



SHM Receptacle
MARC 43 & MARC 53



Mated MARC 63
Connector Series





Mated MARC 43
Connector Series

For complete product information, order Catalog 1308638

Engineering Notes

Introduction

Product Facts

- **Most connectors intermateable with connectors made to MIL-C-28748 requirements**
- **Wide range of connector styles and sizes: standard connectors (unloaded), posted connectors (preloaded) and special application connectors (unloaded)**
- **Complete line of accessory hardware for fastening, protecting, guiding, shielding, strain relief and keying**
- **A variety of contacts: signal, power, coaxial and posted versions—many are interchangeable and can be intermixed in the same connector housing**
- **Full complement of application tooling for wire crimp and posted terminations—hand tools, semiautomatic tooling and fully automatic machines provide highly reliable, low cost terminations to meet production requirements**

Standard Connectors

Standard connectors are comprised of unloaded housings that accept a variety of crimp, solder and posted contacts. All standard connector housings will accept pins and/or sockets, permitting various combinations of contact loading.

Posted Connectors

Posted connectors are preloaded with post-type contacts that accept TERMI-POINT Clip or wrap-type terminations. Posted connectors are described in Catalog 82003.

Special Application Connectors

- V.35 Connectors are described in this catalog

Refer to Catalog 82003 for the following Special Application connectors.

- High Current
- Mixed Contact Connectors
- High Voltage
- RFI/EMI Shielded
- Grounding Blocks

Standard Housings



Posted Connectors



Special Application Connectors

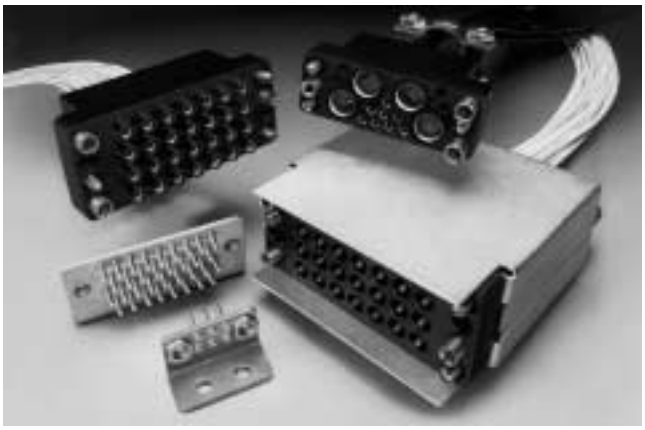

For complete product information, order Catalog 82003

Products for Industrial & Commercial Applications
Dimensions are shown for reference purposes only.
Dimensions are in inches and millimeters unless otherwise specified. Values in brackets are metric equivalents.
Specifications subject to change.
Technical Support Center
1-800-522-6752
www.tycoelectronics.com

Material Specifications

Contacts

The material composition and construction of AMP contacts encompass varying price ranges and performance characteristics. Specific materials and available platings and plating thicknesses of each contact type are provided on individual contact pages in the Contact section. A brief description of each contact type is presented in Catalog 82003. Also, typical performance data of M Series connectors and contacts is shown below.

Housings

M Series connector housings are made of either diallyl phthalate (blue), general purpose phenolic (black) or polyester (black).

Diallyl phthalate housings are molded of material per MIL-M-14, Type SDG. These housings are well suited for use where adverse environmental conditions are an important factor. Their advantages include exceptional stability; excellent resistance to acids, alkalies and solvents; low moisture absorption; and good dielectric strength.

Phenolic housings are molded of material per MIL-M-14, Type CFG. The performance characteristics of these housings make them an excellent choice for applications in which exceptional resistance to acids, alkalies or solvents is not of prime concern. Polyester housings are molded from a high temperature thermoplastic material per ASTM D3220. Polyester housings provide the high temperature characteristics of diallyl phthalate and phenolic, but with a higher impact strength.

Hardware

A variety of materials such as plated steel, stainless steel and aluminum, are used in the construction of M Series connector hardware. This provides for the proper operation and durability of each hardware component, while offering a choice of economies to satisfy particular application requirements. The materials of each hardware component are specified on the individual hardware component pages in the Hardware section (pages 9210 through 9220).

Performance Data

Temperature Rating:
Phenolic Housings,
–55°C to +150°C
Diallyl Phthalate Housings,
–65°C to +125°C
Polyester, –55°C to +130°C

Flammability Ratings: UL94V-0

Dielectric Withstanding Voltage (at sea level):
Type II Contacts, 1500 VAC, RMS
Type III+ Contacts, 900 VAC, RMS

Durability (Mating/Unmating):
Types II and III+ Contacts, Gold Plated: 500 cycles;
Types II and III+ Contacts, Bright Tin-Lead Plated: 50 cycles; Type I Contacts, Gold Plated: 100 cycles

Note: For detailed information on the above performance data and further information on other performance data such as Insulation Resistance, Thermal Shock, Moisture Resistance, Vibration and Physical Shock, request AMP Product Specification No. 108-10001.

- **Recognized under the Component Program of Underwriters Laboratories Inc. for 250 volts, File No. E28476**
- **Certified by Canadian Standards Association, File No. LR 7189**

For complete product information, order Catalog 82003

Products for Industrial & Commercial Applications
Dimensions are shown for reference purposes only.
Dimensions are in inches and millimeters unless otherwise specified. Values in brackets are metric equivalents.
Specifications subject to change.
Technical Support Center
1-800-522-6752
www.tycoelectronics.com

How to Choose M Series Connectors

How to choose the appropriate connector/contact/ hardware combination

Choosing the appropriate connector/contact/hardwar e combination is essential to the proper function of any AMP M Series connector. First, a customer must evaluate each individual application with regards to: wire size(s); number of circuits; available space; fastening methods; and needs for protection, shielding, guiding, strain relief and keying. Then, the customer must consider the following factors to make the appropriate selection of M Series connectors and related components.

A—Determine Connector Type–
This decision is based on the selected contact types, circuit density requirements and, if posted connectors are desired, in-plant production capabilities for wiring connectors using hand tools or semiautomatic tooling. Detailed specifications of the various M Series connectors are presented on the following pages: Standard connectors (pages 9192 thru 9199), Special Application connectors (pages 9201 thru 9209).

B—Determine Hardware–
This decision is based on the selected connector types, and the individual application requirements for fastening, protection, shielding, guiding, strain relief and keying. To assist customers in determining the proper hardware to use, hardware selection information has been formulated for each connector type. This information is located on pages 9176 thru 9191. Complete specifications of each hardware component are presented in the Hard-ware section of the catalog (pages 9210 thru 9220).

C—Determine Contact Type–
This decision is based on wire size(s) and reliability and cost requirements of an application, as well as the customer's in-plant production capabilities. Complete specifications, including accepted wire sizes and available platings of all pin and socket contacts, are presented in the Precision Pin and Socket Contacts section of Catalog 82003. Application tooling for crimp- and post-type contacts is presented in Catalog 82003.

Cable-to-Cable Selection Guide

Application

A

Featured Hardware

- Strain Relief Clamps
- Locking Springs
- Pin Hoods
- Guide Hardware

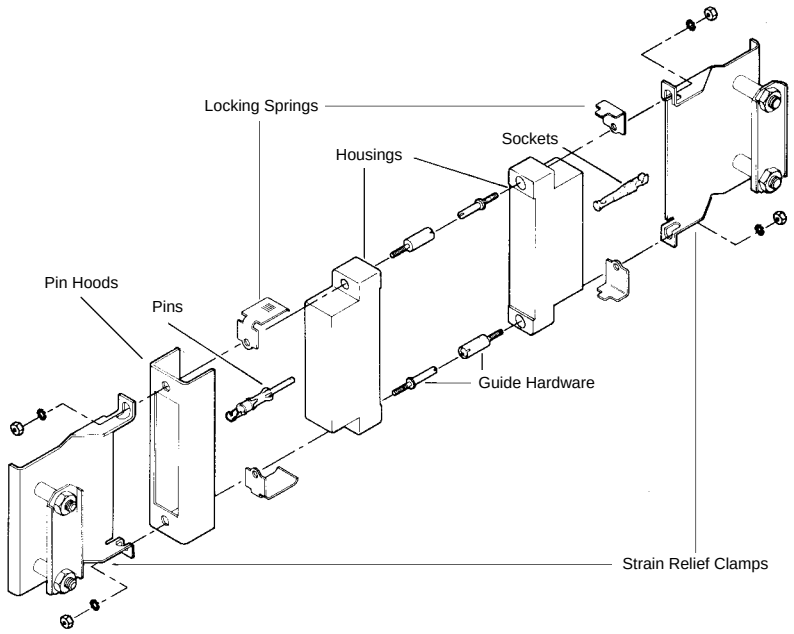

Component Description			Number of Positions				
			6	14	20	26	34
STANDARD HOUSINGS Pages 9192 to 9199	Plug Block	Phenolic	202758-1	201355-1	201356-1	201359-1	1-201357-1
	Receptacle Block	Phenolic	202757-1	201298-1	200346-2	200512-2	200838-2
	Plug Block	Diallyl Phthalate	202758-3	—	201356-3	201359-3	201357-3
	Receptacle Block	Diallyl Phthalate	202757-3	201298-3	200346-4	200512-3	200838-3
	Plug Block	Polyester	—	—	—	—	2013800-1
	Receptacle Block	Polyester	—	—	—	—	200802-1
STRAIN RELIEF CLAMPS Page 9220	Long	Nickel Plated Steel	—	201843-1	—	201845-1	201846-1
	Short	Nickel Plated Steel	203432-1	200686-1	—	201229-1	—
	Long	Stainless Steel	—	—	—	—	—
	Short	Stainless Steel	—	—	201237-1	—	201224-1
GUIDE HARDWARE Page 9213	Center Male	Stainless Steel	200389-2	200389-2	200389-2	200389-2	200389-2
	Center Female	Stainless Steel	200390-2	200390-2	200390-2	200390-2	200390-2
	Corner Male	Stainless Steel	—	—	—	—	200833-2
	Corner Female	Stainless Steel	—	—	—	—	200835-2
LOCKING SPRINGS[1] Page 9212	Male—Nickel Plated Spring Steel		201921-1	201921-1	201921-1	201923-1	201925-1
	Female—Stainless Steel		201922-1	201922-1	201922-1	201918-1 (Single Spring)	201926-1
PIN HOODS Pages 9214 and 9215	Internal Open End	Nickel Plated Steel	204258-6	201363-4	—	201785-4	201786-4
	Internal Closed End	Nickel Plated Steel	—	—	—	—	—
	External Closed End	Al Iridite	—	—	—	—	—
	External Closed End	Nickel Plated Steel	—	—	—	—	—

[1] Each part number contains two locking springs. Order one male and one female for each mated pair of connectors.

For complete product information, order Catalog 82003

Products for Industrial & Commercial Applications
Dimensions are shown for reference purposes only.
Dimensions are in inches and millimeters unless otherwise specified. Values in brackets are metric equivalents.
Specifications subject to change.
Technical Support Center
1-800-522-6752
www.tycoelectronics.com

Cable-to-Cable Selection Guide

1. Confirm that **Application A** (at left) most closely meets your requirements. (Other applications are shown on pages 9178 thru 9191.)
2. Find the appropriate column for the number of positions required.
3. Select part numbers required for the application listed in the column below the number of positions.

   If a part number is not listed for a particular item, it is not available.

   If more than one part number is listed for a particular hardware item, choose the one which best fits your application.
4. Dimensional information is available on the indicated pages under description column.
5. Select Contacts: Type II (page 9105), Type III+ (pages 9101 thru 9103) or Subminiature Coaxial (pages 9116 and 9117).

Special application housings may be substituted for these standard housings. See Special Application Section.

This cable-to-cable application utilizes locking springs, strain relief clamps, a pin hood for pin protection and guide hardware.

The 34 and 50 position connectors can be used with either center or corner guide hardware. If center guide hardware is used, an additional four 4-40 screws, nuts and lockwashers are required to secure the locking springs. Corner guides require four guide pins and four guide sockets for each mated pair of connectors.

Number of Positions						Component Description		
41	50	75	104	104 CF	160 CF			
202135-2	201358-1	—	—	—	—	Plug Block / Receptacle Block	Phenolic	STANDARD HOUSINGS Pages 9192 to 9199
201302-1	200277-2	—	—	—	—			
202135-4	201358-3	—	—	—	—	Plug Block / Receptacle Block	Diallyl Phthalate	
201302-3	200277-4	—	—	—	—			
—	—	—	—	1-201692-6	—	Plug Block / Receptacle Block	Polyester	
—	—	—	—	—	—			
—	—	—	—	—	—	Long / Short	Nickel Plated Steel	STRAIN RELIEF CLAMPS Page 9220
—	201182-1	—	—	—	—			
201766-1	201847-1	—	—	—	—	Long / Short	Stainless Steel	
—	—	—	—	—	—			
200389-2	200389-2	—	—	—	—	Center Male / Center Female / Corner Male / Corner Female	Stainless Steel	GUIDE HARDWARE Page 9213
200390-2	200390-2	—	—	—	—			
—	200833-2	—	—	—	—			
—	200835-2	—	—	—	—			
201921-1	201925-1	—	—	—	—	Male—Nickel Plated Spring Steel		LOCKING SPRINGS[1] Page 9212
201922-1	201926-1	—	—	—	—	Female—Stainless Steel		
—	—	—	—	—	—	Internal Open End	Nickel Plated Steel	PIN HOODS Pages 9214 and 9215
—	—	—	—	—	—	Internal Closed End	Nickel Plated Steel	
—	—	—	—	—	—	External Closed End	Al Iridite	
—	—	—	—	—	—	External Closed End	Nickel Plated Steel	

For complete product information, order Catalog 82003

Products for Industrial & Commercial Applications
Dimensions are shown for reference purposes only.
Dimensions are in inches and millimeters unless otherwise specified. Values in brackets are metric equivalents.
Specifications subject to change.
Technical Support Center
1-800-522-6752
www.tycoelectronics.com

Cable-to-Cable Selection Guide

Application

B

Featured Hardware

- Strain Relief Clamps
- Pin Hoods
- Jackscrews
- Guide Hardware

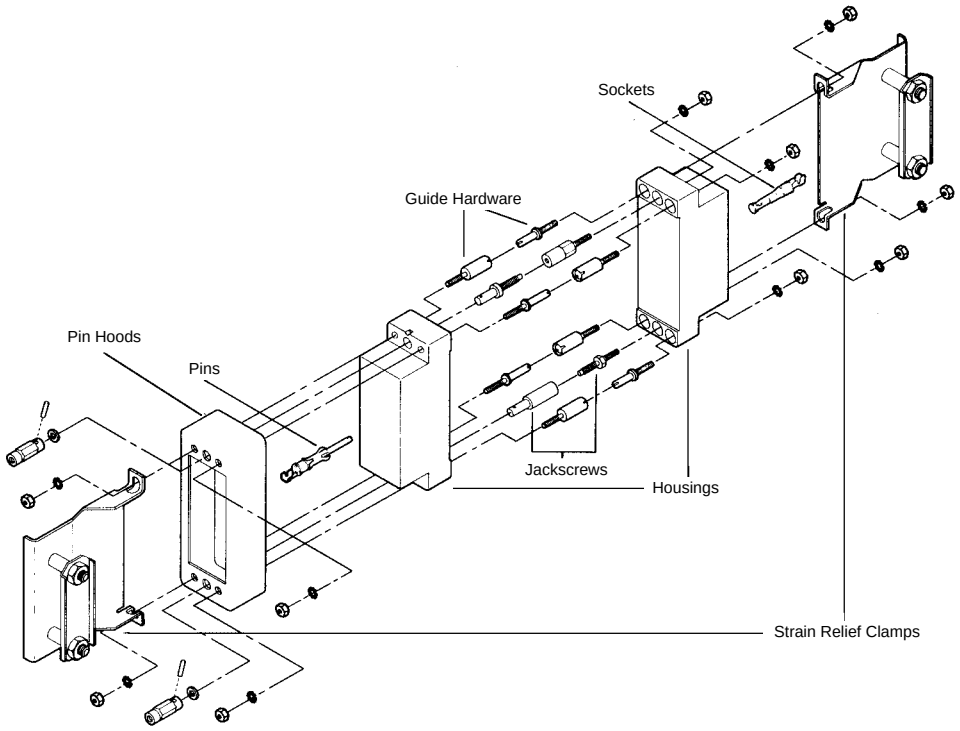

Component Description			Number of Positions				
			6	14	20	26	34
STANDARD HOUSINGS Pages 9192 to 9199	Plug Block	Phenolic	202758-1	201355-1	201356-1	201359-1	1-201357-1
	Receptacle Block	Phenolic	202757-1	201298-1	200346-2	200512-2	200838-2
	Plug Block	Diallyl Phthalate	202758-3	—	201356-3	201359-3	201357-3
	Receptacle Block	Diallyl Phthalate	202757-3	201298-3	200346-4	200512-3	200838-3
	Plug Block	Polyester	—	—	—	—	213800-1
	Receptacle Block	Polyester	—	—	—	—	213802-1
STRAIN RELIEF CLAMPS Page 9220	Long	Nickel Plated Steel	—	201843-1	—	201845-1	201846-1
	Short	Nickel Plated Steel	203432-1	200686-1	—	201229-1	—
	Long	Stainless Steel	—	—	—	—	—
	Short	Stainless Steel	—	—	201237-1	—	201224-1
JACKSCREWS[1] Pages 9210 and 9211	Fixed Male	Stainless Steel	201092-1	201092-1	201092-1	201092-1	201092-1
	Fixed Female	Stainless Steel	201089-1	201089-1	201089-1	201089-1	201089-1
	Long-Long Male	Tip: Stainless Steel Body: Die Cast Zinc	—	—	—	—	—
	Long-Long Female	Tip: Stainless Steel Body: Die Cast Zinc	—	—	—	—	—
	Long Male	Tip: Stainless Steel Body: Die Cast Zinc	—	—	—	—	—
	Long Female	Tip: Stainless Steel Body: Die Cast Zinc	—	—	—	—	—
	Short-Short Male	Tip: Stainless Steel Body: Die Cast Zinc	201827-1	201827-1	201827-1	201827-1	201827-1
	Short-Short Female	Tip: Stainless Steel Body: Die Cast Zinc	201828-1	201828-1	201828-1	201828-1	201828-1
GUIDE HARDWARE Page 9213	Center Male	Stainless Steel	—	—	—	—	—
	Center Female	Stainless Steel	—	—	—	—	—
	Corner Male	Stainless Steel	—	—	—	—	200833-2
	Corner Female	Stainless Steel	—	—	—	—	200835-2
PIN HOODS Pages 9214 and 9215	Internal Open End	Nickel Plated Steel	204258-6	201363-4	—	201785-4	201786-4
	Internal Closed End	Nickel Plated Steel	—	—	—	—	202434-4
	External Closed End	Al Iridite	—	—	—	201349-2	201350-2
	External Closed End	Nickel Plated Steel	—	—	—	—	—

[1] Listed Jackscrews have 6-32 single lead threads. For corresponding Jackscrews with 6-32 double lead threads, refer to pages 9210 and 9211.

For complete product information, order Catalog 82003

Products for Industrial & Commercial Applications
Dimensions are shown for reference purposes only.
Dimensions are in inches and millimeters unless otherwise specified. Values in brackets are metric equivalents.
Specifications subject to change.
Technical Support Center
1-800-522-6752
www.tycoelectronics.com

Cable-to-Cable Selection Guide

1. Confirm that **Application B** (at left) most closely meets your requirements. (Other applications are shown on pages 9176-9177 and 9180 through 9191.)
2. Find the appropriate column for the number of positions required.
3. Select part numbers required for the application listed in the column below the number of positions.

   If a part number is not listed for a particular item, it is not available.

   If more than one part number is listed for a particular hardware item, choose the one which best fits your application.
4. Dimensional information is available on the indicated pages under description column.
5. Select Contacts: Type II (page 9105), Type III+ (pages 9101 thru 9103) or Subminiature Coaxial (pages 9116 and 9117).

Special application housings may be substituted for these standard housings. See Special Application Section.

This cable-to-cable application utilizes jackscrews, strain relief clamps and guide hardware. A pin hood is provided for pin protection. Sizes 6, 14, 20, 26, and 41 **do not** use guide hardware with this application.

Number of Positions						Component Description		
41	50	75	104	104 CF	160 CF			
202135-2	201358-1	201310-1	201345-1	—	—	Plug Block Receptacle Block	Phenolic	STANDARD HOUSINGS Pages 9192 to 9199
201302-1	200277-2	201311-1	201037-1	—	—			
202135-4	201358-3	201310-3	201345-2	—	—	Plug Block Receptacle Block	Diallyl Phthalate	
201302-3	200277-4	201311-3	—	—	—			
—	—	—	—	1-201692-6	—	Plug Block Receptacle Block	Polyester	
—	—	—	—	—	—			
—	—	—	201849-1	—	—	Long Short	Nickel Plated Steel	STRAIN RELIEF CLAMPS Page 9220
—	201182-1	200730-1	—	—	—			
201766-1	201847-1	201848-1	—	—	—	Long Short	Stainless Steel	
—	—	—	—	—	—			
201092-1	201092-1	201092-1	201092-1	—	—	Fixed Male Fixed Female	Stainless Steel	JACKSCREWS[1] Pages 9210 and 9211
201089-1	201089-1	201089-1	201089-1	—	—			
—	—	—	—	—	—	Long-Long Male	Tip: Stainless Steel Body: Die Cast Zinc	
—	—	—	—	—	—	Long-Long Female		
—	—	—	—	—	—	Long Male		
—	—	—	—	—	—	Long Female		
201827-1	201827-1	201827-1	201827-1	—	—	Short-Short Male		
201828-1	201828-1	201828-1	201828-1	—	—	Short-Short Female		
—	—	—	—	—	—	Center Male Center Female Corner Male Corner Female	Stainless Steel	GUIDE HARDWARE Page 9213
—	—	—	—	—	—			
—	200833-2	201046-2	201046-2	—	—			
—	200835-2	201047-2	201047-2	—	—			
—	—	—	—	—	—	Internal Open End	Nickel Plated Steel	PIN HOODS Pages 9214 and 9215
—	202394-2	201369-4	201364-4	—	—	Internal Closed End	Nickel Plated Steel	
—	—	—	—	—	—	External Closed End	Al Iridite	
—	201390-5	201368-4	201346-4	—	—	External Closed End	Nickel Plated Steel	

For complete product information, order Catalog 82003

Products for Industrial & Commercial Applications
Dimensions are shown for reference purposes only.
Dimensions are in inches and millimeters unless otherwise specified. Values in brackets are metric equivalents.
Specifications subject to change.
Technical Support Center
1-800-522-6752
www.tycoelectronics.com

Cable-to-Cable Selection Guide

Application

C

Featured Hardware

- Shields (One-piece)
- Pin Hoods
- Locking Springs
- Guide Hardware

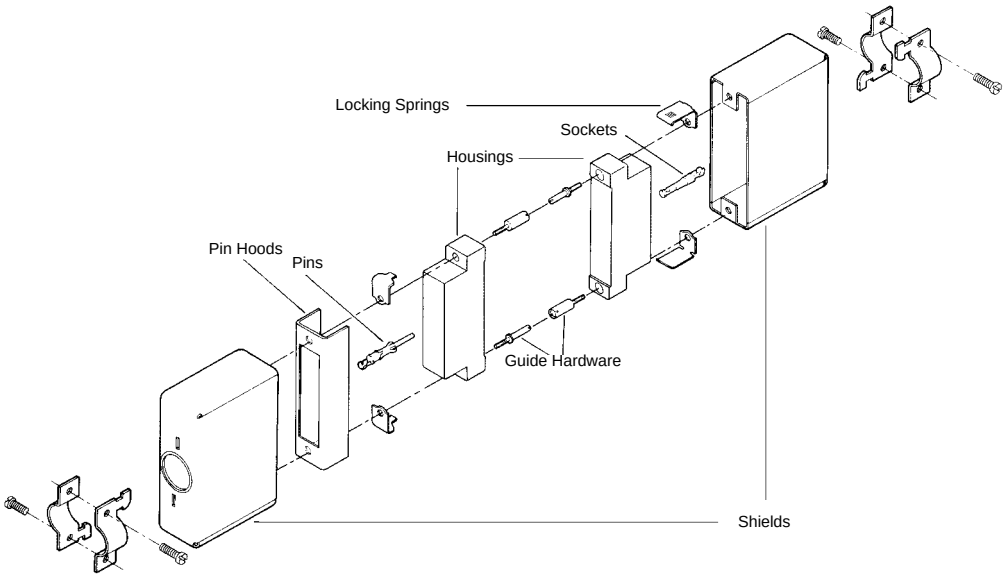

Component Description			Number of Positions				
			6	14	20	26	34
STANDARD HOUSINGS Pages 9192 to 9199	Plug Block	Phenolic	—	201355-1	201356-1	201359-1	1-201357-1
	Receptacle Block	Phenolic	—	201298-1	200346-2	200512-2	200838-2
	Plug Block	Diallyl Phthalate	—	—	201356-3	201359-3	201357-3
	Receptacle Block	Diallyl Phthalate	—	201298-3	200346-4	200512-3	200838-3
	Plug Block	Polyester	—	—	—	—	213800-1
	Receptacle Block	Polyester	—	—	—	—	213802-1
SHIELDS Pages 9216 to 9219	180° Two-Piece Long	Al Anodized	—	—	—	—	—
		Zinc Plated Steel	—	—	—	—	—
	180° Two-Piece Short	Al Anodized	—	—	—	—	—
		Zinc Plated Steel	—	—	—	—	—
		Zinc Plated Cast Al	—	—	—	—	—
	90° Two-Piece Long	Nickel Plated Steel	—	—	—	—	—
	90° Two-Piece Short	Nickel Plated Steel	—	—	—	—	—
	45° Two-Piece Short	Nickel Plated Steel	—	—	—	—	—
	45° Two-Piece Deep	Nickel Plated Steel	—	—	—	—	—
	180° One-Piece Long	Nickel Plated Steel	—	201378-2	—	—	201384-2
	180° One-Piece Short	Nickel Plated Steel	—	201360-2	201227-2	201169-2	201165-2
	90° One-Piece Short	Nickel Plated Steel	—	201467-2	201460-2	201468-2	201469-2
GUIDE HARDWARE Page 9213	Center Male	Stainless Steel	—	200389-2	200389-2	200389-2	200389-2
	Center Female	Stainless Steel	—	200390-2	200390-2	200390-2	200390-2
	Corner Male	Stainless Steel	—	—	—	—	200833-2
	Corner Female	Stainless Steel	—	—	—	—	200835-2
LOCKING SPRINGS[1] Page 9212	Male—Nickel Plated Spring Steel		—	201921-1	201921-1	201923-1	201925-1
	Female—Stainless Steel		—	201922-1	201922-1	—	201926-1
PIN HOODS Pages 9214 and 9215	Internal Open End	Nickel Plated Steel	—	201363-4	—	201785-4	201786-4
	Internal Closed End	Nickel Plated Steel	—	—	—	—	—
	External Closed End	Al Iridite	—	—	—	—	—
	External Closed End	Nickel Plated Steel	—	—	—	—	—

[1] Each part number contains two locking springs. Order one male and one female for each mated pair of connectors.

For complete product information, order Catalog 82003

Products for Industrial & Commercial Applications

Dimensions are shown for reference purposes only.

Dimensions are in inches and millimeters unless otherwise specified. Values in brackets are metric equivalents.

Specifications subject to change.

Technical Support Center
1-800-522-6752
www.tycoelectronics.com

Cable-to-Cable Selection Guide

1. Confirm that **Application C** (at left) most closely meets your requirements. (Other applications are shown on pages 9176 thru 9179 and 9182 thru 9191.)
2. Find the appropriate column for the number of positions required.
3. Select part numbers required for the application listed in the column below the number of positions.

   If a part number is not listed for a particular item, it is not available.

   If more than one part number is listed for a particular hardware item, choose the one which best fits your application.
4. Dimensional information is available on the indicated pages under description column.
5. Select Contacts: Type II (page 9105), Type III+ (pages 9101 thru 9103) or Subminiature Coaxial (pages 9116 and 9117).

Special application housings may be substituted for these standard housings. See Special Application Section.

This cable-to-cable application utilizes locking springs, one-piece shields, a pin hood for pin protection and guide hardware. The shields are available with both 180° and 90° cable exits. The 180° shields are available in a long version which provides pin protection in lieu of a pin hood.

A short shield and a pin hood or a long shield can be used on one side only of a mated pair of connectors. The mating connector must use a short shield.

The 34 and 50 position connectors can be used with either center or corner guide hardware. If center guides are used, an additional four 4-40 screws are required to secure the locking springs. If corner guides are used, an additional two 4-40 screws will be required to attach the shield. Corner guides require four guide pins and four guide sockets for each mated pair of connectors.

Number of Positions						Component Description		
41	50	75	104	104 CF	160 CF			
202135-2	201358-1	—	—	—	—	Plug Block / Receptacle Block	Phenolic	STANDARD HOUSINGS Pages 9192 to 9199
201302-1	200277-2	—	—	—	—			
202135-4	201358-3	—	—	—	—	Plug Block / Receptacle Block	Diallyl Phthalate	
201302-3	200277-4	—	—	—	—			
—	—	—	—	1-201692-6	—	Plug Block / Receptacle Block	Polyester	
—	—	—	—	—	—			
—	—	—	—	—	—	180° Two-Piece Long	Al Anodized	SHIELDS Pages 9216 to 9219
—	—	—	—	—	—		Zinc Plated Steel	
—	—	—	—	—	—	180° Two-Piece Short	Al Anodized	
—	—	—	—	—	—		Zinc Plated Steel	
—	—	—	—	—	—		Zinc Plated Cast Al	
—	—	—	—	—	—	90° Two-Piece Long	Nickel Plated Steel	
—	—	—	—	—	—	90° Two-Piece Short		
—	—	—	—	—	—	45° Two-Piece Short		
—	—	—	—	—	—	45° Two-Piece Deep		
—	—	—	—	—	—	180° One-Piece Long		
—	—	—	—	—	—	180° One-Piece Short		
201486-2	201470-2	—	—	—	—	90° One-Piece Short		
200389-2	200389-2	—	—	—	—	Center Male	Stainless Steel	GUIDE HARDWARE Page 9213
200390-2	200390-2	—	—	—	—	Center Female		
—	200833-2	—	—	—	—	Corner Male		
—	200835-2	—	—	—	—	Corner Female		
201921-1	201925-1	—	—	—	—	Male—Nickel Plated Spring Steel		LOCKING SPRINGS[1] Page 9212
201922-1	201926-1	—	—	—	—	Female—Stainless Steel		
—	—	—	—	—	—	Internal Open End	Nickel Plated Steel	PIN HOODS Pages 9214 and 9215
—	—	—	—	—	—	Internal Closed End	Nickel Plated Steel	
—	—	—	—	—	—	External Closed End	Al Iridite	
—	—	—	—	—	—	External Closed End	Nickel Plated Steel	

For complete product information, order Catalog 82003

Products for Industrial & Commercial Applications
Dimensions are shown for reference purposes only.
Dimensions are in inches and millimeters unless otherwise specified. Values in brackets are metric equivalents.
Specifications subject to change.
Technical Support Center
1-800-522-6752
www.tycoelectronics.com

Cable-to-Cable Selection Guide

Application

D

Featured Hardware

- Shields (Two-piece)
- Pin Hoods
- Jackscrews
- Strain Relief Clamps
- Guide Hardware

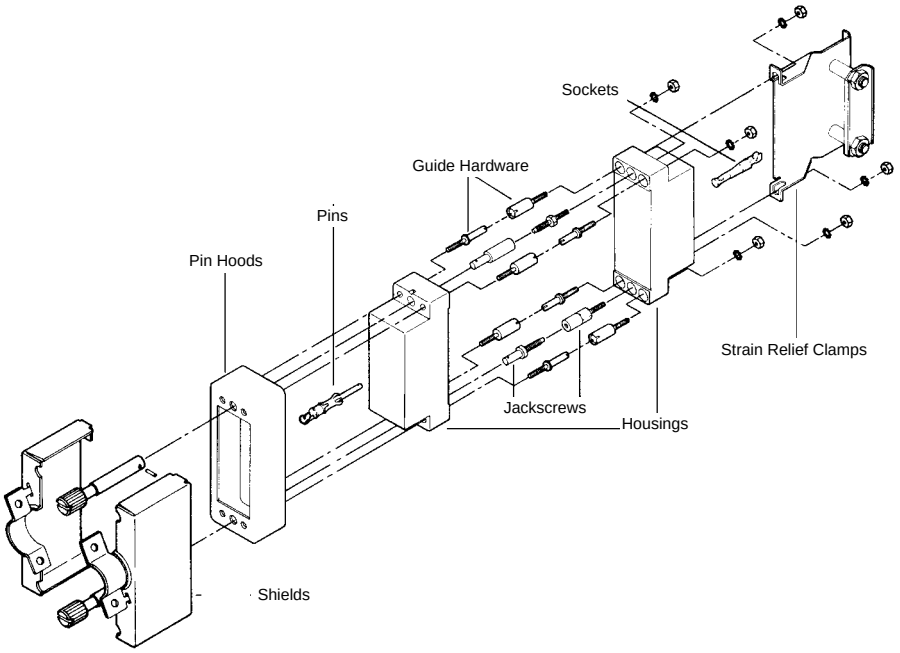

Component Description			Number of Positions				
			6	14	20	26	34
STANDARD HOUSINGS Pages 9192 to 9199	Plug Block	Phenolic	—	—	201356-1	201359-1	1-201357-1
	Receptacle Block		—	—	200346-2	200512-2	200838-2
	Plug Block	Diallyl Phthalate	—	—	201356-3	201359-3	201357-3
	Receptacle Block		—	—	200346-4	200512-3	200838-3
	Plug Block	Polyester	—	—	—	—	213800-1
	Receptacle Block		—	—	—	—	213802-1
SHIELDS Pages 9216 to 9219	180° Two-Piece Long	Al Anodized	—	—	—	201576-1	201571-1
		Nickel Plated Steel	—	—	—	201576-2	201571-2
	180° Two-Piece Short	Al Anodized	—	—	—	—	200517-1
		Nickel Plated Steel	—	—	204087-1	200514-2	200517-2
		Nickel Plated Cast Al	—	—	—	—	—
	90° Two-Piece Long	Nickel Plated Steel	—	—	—	—	—
	90° Two-Piece Short		—	—	—	—	—
	45° Two-Piece Short		—	—	—	—	—
	45° Two-Piece Deep		—	—	—	—	—
	180° One-Piece Long		—	—	—	—	—
	180° One-Piece Short		—	—	—	—	—
	90° One-Piece Short		—	—	—	—	—
STRAIN RELIEF CLAMPS Page 9220	Long	Nickel Plated Steel	—	—	—	201845-1	201846-1
	Short		—	—	—	201229-1	—
	Long	Stainless Steel	—	—	—	—	—
	Short		—	—	201237-1	—	201224-1
JACKSCREWS[1] Pages 9210 and 9211	Fixed Male	Stainless Steel	—	—	201092-1	201092-1	201092-1
	Fixed Female		—	—	201089-1	201089-1	201089-1
	Long-Long Male	Tip: Stainless Steel Body: Die Cast Zinc	—	—	—	—	—
	Long-Long Female		—	—	—	—	—
	Long Male		—	—	201413-1	201413-1	201413-1
	Long Female		—	—	201414-1	201414-1	201414-1
	Short-Short Male		—	—	—	—	—
	Short-Short Female		—	—	—	—	—
GUIDE HARDWARE Page 9213	Center Male	Stainless Steel	—	—	—	—	—
	Center Female		—	—	—	—	—
	Corner Male		—	—	—	—	200833-2
	Corner Female		—	—	—	—	200835-2
PIN HOODS Pages 9214 and 9215	Internal Open End	Nickel Plated Steel	—	—	—	—	201786-4
	Internal Closed End	Nickel Plated Steel	—	—	—	—	202434-4
	External Closed End	Al Iridite	—	—	—	—	201350-2
	External Closed End	Nickel Plated Steel	—	—	—	—	—

[1] Listed Jackscrews have 6-32 single lead threads. For corresponding Jackscrews with 6-32 double lead threads, refer to pages 9210 and 9211.

Products for Industrial & Commercial Applications
Dimensions are shown for reference purposes only.
Dimensions are in inches and millimeters unless otherwise specified. Values in brackets are metric equivalents.
Specifications subject to change.
Technical Support Center
1-800-522-6752
www.tycoelectronics.com

Cable-to-Cable Selection Guide

1. Confirm that **Application D** (at left) most closely meets your requirements. (Other applications are shown on pages 9176 thru 9181 and 9184 thru 9191.)

2. Find the appropriate column for the number of positions required.

3. Select part numbers required for the application listed in the column below the number of positions.

   If a part number is not listed for a particular item, it is not available.

   If more than one part number is listed for a particular hardware item, choose the one which best fits your application.

4. Dimensional information is available on the indicated pages under description column.

5. Select Contacts: Type II (page 9105), Type III+ (pages 9101 thru 9103) or Subminiature Coaxial (pages 9116 and 9117).

Special application housings may be substituted for these standard housings. See Special Application Section.

This cable-to-cable application utilizes jackscrews, a two-piece short shield, a strain relief clamp, a pin hood for pin protection and guide hardware.

Do not use a pin hood in combination with the shield for sizes 20, 26 and 41. A long shield may be used in lieu of pin hood for pin protection for all sizes except the 20 position. Shields are available with 180° cable exit and for the 50 through 104 position connectors, a 90° cable exit.

Select the appropriate jackscrew length for the type of shield chosen as indicated by symbol (△▲).

Number of Positions						Component Description		
41	50	75	104	104 CF	160 CF			
202135-2	201358-1	201310-1	201345-1	—	—	Plug Block Receptacle Block	Phenolic	**STANDARD HOUSINGS Pages 9192 to 9199**
201302-1	200277-2	201311-1	201037-1	—	—			
202135-4	201358-3	201310-3	201345-2	—	—	Plug Block Receptacle Block	Diallyl Phthalate	
201302-3	200277-4	201311-3	—	—	—			
—	—	—	—	1-201692-6	—	Plug Block Receptacle Block	Polyester	
—	—	—	—	—	—			
—	201443-1△	—	—	—	—	180° Two-Piece Long	Al Anodized	**SHIELDS Pages 9216 to 9219**
202383-2	201443-2△	202713-2▲	204173-2▲	—	—		Nickel Plated Steel	
—	200532-1△	—	—	—	—	180° Two-Piece Short	Al Anodized	
202383-1	200532-2△	202713-1▲	204173-1▲	—	—		Nickel Plated Steel	
—	—	—	201131-1△	—	—		Nickel Plated Cast Al	
—	203975-2▲	202711-3▲	—	—	—	90° Two-Piece Long	Nickel Plated Steel	
—	203975-1▲	202711-1▲	—	—	—	90° Two-Piece Short		
—	—	—	—	—	—	45° Two-Piece Short		
—	—	—	—	—	—	45° Two-Piece Deep		
—	—	—	—	—	—	180° One-Piece Long		
—	—	—	—	—	—	180° One-Piece Short		
—	—	—	—	—	—	90° One-Piece Short		
—	—	—	201849-1	—	—	Long Short	Nickel Plated Steel	**STRAIN RELIEF CLAMPS Page 9220**
—	201182-1	200730-1	—	—	—			
201766-1	201847-1	201848-1	—	—	—	Long Short	Stainless Steel	
—	—	—	—	—	—			
201092-1	201092-1	201092-1	201092-1	—	—	Fixed Male Fixed Female	Stainless Steel	**JACKSCREWS[1] Pages 9210 and 9211**
201089-1	201089-1	201089-1	201089-1	—	—			
—	207234-1▲	207234-1▲	207234-1▲	—	—	Long-Long Male	Tip: Stainless Steel Body: Die Cast Zinc	
—	207235-1▲	207235-1▲	207235-1▲	—	—	Long-Long Female		
201413-1	201413-1△	201413-1△	201413-1△	—	—	Long Male		
201414-1	201414-1△	201414-1△	201414-1△	—	—	Long Female		
—	—	—	—	—	—	Short-Short Male		
—	—	—	—	—	—	Short-Short Female		
—	—	—	—	—	—	Center Male	Stainless Steel	**GUIDE HARDWARE Page 9213**
—	—	—	—	—	—	Center Female		
—	200833-2	201046-2	201046-2	—	—	Corner Male		
—	200835-2	201047-2	201047-2	—	—	Corner Female		
—	—	—	—	—	—	Internal Open End	Nickel Plated Steel	**PIN HOODS Pages 9214 and 9215**
—	202394-2	201369-4	201364-4	—	—	Internal Closed End	Nickel Plated Steel	
—	—	—	—	—	—	External Closed End	Al Iridite	
—	201390-5	201368-4	201346-4	—	—	External Closed End	Nickel Plated Steel	

For complete product information, order Catalog 82003

Cable-to-Panel Selection Guide

Application

E

Featured Hardware

- Strain Relief Clamps
- Locking Springs
- Pin Hoods
- Guide Hardware

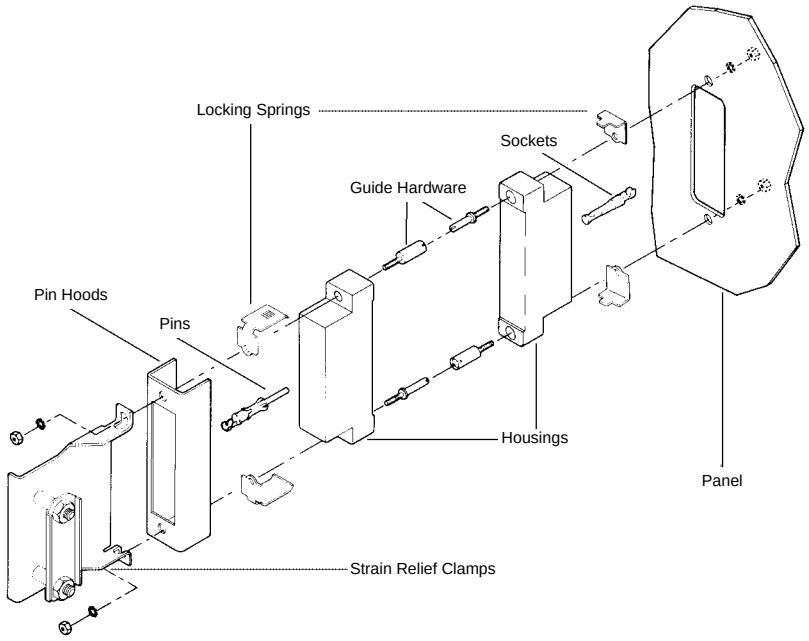

Component Description			Number of Positions				
			6	14	20	26	34
STANDARD HOUSINGS Pages 9192 to 9199	Plug Block	Phenolic	202758-1	201355-1	201356-1	201359-1	1-201357-1
	Receptacle Block	Phenolic	202757-1	201298-1	200346-2	200512-2	200838-2
	Plug Block	Diallyl Phthalate	202758-3	—	201356-3	201359-3	201357-3
	Receptacle Block	Diallyl Phthalate	202757-3	201298-3	200346-4	200512-3	200838-3
	Plug Block	Polyester	—	—	—	—	213800-1
	Receptacle Block	Polyester	—	—	—	—	213802-1
STRAIN RELIEF CLAMPS Page 9220	Long	Nickel Plated Steel	—	201843-1	—	201845-1	201846-1
	Short	Nickel Plated Steel	203432-1	200686-1	—	201229-1	—
	Long	Stainless Steel	—	—	—	—	—
	Short	Stainless Steel	—	—	201237-1	—	201224-1
GUIDE HARDWARE Page 9213	Center Male	Stainless Steel	200389-2	200389-2	200389-2	200389-2	200389-2
	Center Female	Stainless Steel	200390-2	200390-2	200390-2	200390-2	200390-2
	Corner Male	Stainless Steel	—	—	—	—	200833-2
	Corner Female	Stainless Steel	—	—	—	—	200835-2
LOCKING SPRINGS[1] Page 9212	Male—Nickel Plated Spring Steel		201921-1	201921-1	201921-1	201923-1	201925-1
	Female—Stainless Steel		201922-1	201922-1	201922-1	—	201926-1
PIN HOODS Pages 9214 and 9215	Internal Open End	Nickel Plated Steel	204258-6	201363-4	—	201785-4	201786-4
	Internal Closed End	Nickel Plated Steel	—	—	—	—	—
	External Closed End	Al Iridite	—	—	—	—	—
	External Closed End	Nickel Plated Steel	—	—	—	—	—

[1] Each part number contains two locking springs. Order one male and one female for each mated pair of connectors.

For complete product information, order Catalog 82003

Products for Industrial & Commercial Applications
Dimensions are shown for reference purposes only.
Dimensions are in inches and millimeters unless otherwise specified. Values in brackets are metric equivalents.
Specifications subject to change.
Technical Support Center
1-800-522-6752
www.tycoelectronics.com

Cable-to-Panel Selection Guide

1. Confirm that **Application E** (at left) most closely meets your requirements. (Other applications are shown on pages 9176 thru 9183 and 9186 through 9191.)

2. Find the appropriate column for the number of positions required.

3. Select part numbers required for the application listed in the column below the number of positions.

   If a part number is not listed for a particular item, it is not available.

   If more than one part number is listed for a particular hardware item, choose the one which best fits your application.

4. Dimensional information is available on the indicated pages under description column.

5. Select Contacts: Type II (page 9105), Type III+ (pages 9101 through 9103) or Subminiature Coaxial (pages 9116 and 9117).

Special application housings and posted housings may be substituted for these standard housings. See Special Application and Posted Connectors Sections.

This cable-to-panel application utilizes locking springs, strain relief clamps, a pin hood for pin protection and guide hardware.

The 34 and 50 position connectors can be used with either center or corner guide hardware. If center guide hardware is used, an additional four 4-40 screws, nuts and lockwashers are required to secure the locking springs. Corner guides require four guide pins and four guide sockets for each mated pair of connectors.

Number of Positions						Component Description		
41	50	75	104	104 CF	160 CF			
202135-2	201358-1	—	—	—	—	Plug Block / Receptacle Block	Phenolic	STANDARD HOUSINGS Pages 9192 to 9199
201302-1	200277-2	—	—	—	—			
202135-4	201358-3	—	—	—	—	Plug Block / Receptacle Block	Diallyl Phthalate	
201302-3	200277-4	—	—	—	—			
—	—	—	—	1-201692-6	—	Plug Block / Receptacle Block	Polyester	
—	—	—	—	—	—			
—	—	—	—	—	—	Long / Short	Nickel Plated Steel	STRAIN RELIEF CLAMPS Page 9220
—	201182-1	—	—	—	—			
201766-1	201847-1	—	—	—	—	Long / Short	Stainless Steel	
—	—	—	—	—	—			
200389-2	200389-2	—	—	—	—	Center Male	Stainless Steel	GUIDE HARDWARE Page 9213
200390-2	200390-2	—	—	—	—	Center Female		
—	200833-2	—	—	—	—	Corner Male		
—	200835-2	—	—	—	—	Corner Female		
201921-1	201925-1	—	—	—	—	Male—Nickel Plated Spring Steel		LOCKING SPRINGS[1] Page 9212
201922-1	201926-1	—	—	—	—	Female—Stainless Steel		
—	—	—	—	—	—	Internal Open End	Nickel Plated Steel	PIN HOODS Pages 9214 and 9215
—	—	—	—	—	—	Internal Closed End	Nickel Plated Steel	
—	—	—	—	—	—	External Closed End	Al Iridite	
—	—	—	—	—	—	External Closed End	Nickel Plated Steel	

For complete product information, order Catalog 82003

Products for Industrial & Commercial Applications
Dimensions are shown for reference purposes only.
Dimensions are in inches and millimeters unless otherwise specified. Values in brackets are metric equivalents.
Specifications subject to change.
Technical Support Center
1-800-522-6752
www.tycoelectronics.com

Cable-to-Panel Selection Guide

Application

F

Featured Hardware

- Strain Relief Clamps
- Pin Hoods
- Jackscrews
- Guide Hardware

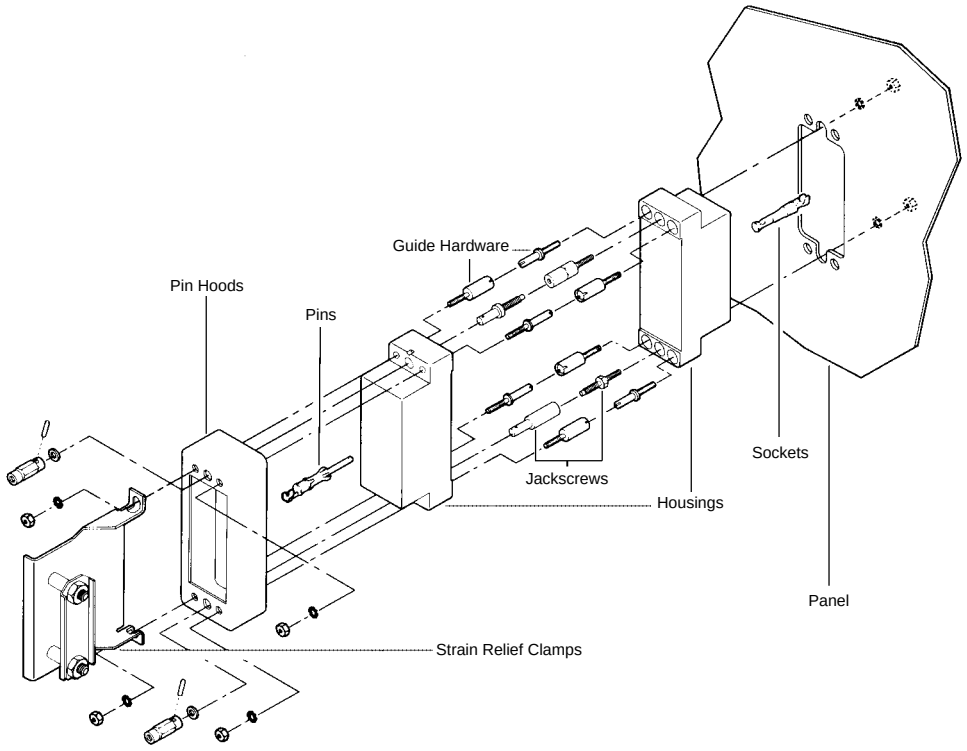

Component Description			Number of Positions				
			6	14	20	26	34
STANDARD HOUSINGS Pages 9192 to 9199	Plug Block	Phenolic	202758-1	201355-1	201356-1	201359-1	1-201357-1
	Receptacle Block	Phenolic	202757-1	201298-1	200346-2	200512-2	200838-2
	Plug Block	Diallyl Phthalate	202758-3	—	201356-3	201359-3	201357-3
	Receptacle Block	Diallyl Phthalate	202757-3	201298-3	200346-4	200512-3	200838-3
	Plug Block	Polyester	—	—	—	—	213800-1
	Receptacle Block	Polyester	—	—	—	—	213802-1
STRAIN RELIEF CLAMPS Page 9220	Long	Nickel Plated Steel	—	201843-1	—	201845-1	201846-1
	Short	Nickel Plated Steel	203432-1	200686-1	—	201229-1	—
	Long	Stainless Steel	—	—	—	—	—
	Short	Stainless Steel	—	—	201237-1	—	201224-1
JACKSCREWS[1] Pages 9210 and 9211	Fixed Male	Stainless Steel	201092-1	201092-1	201092-1	201092-1	201092-1
	Fixed Female	Stainless Steel	201089-1	201089-1	201089-1	201089-1	201089-1
	Long-Long Male	Tip: Stainless Steel, Body: Die Cast Zinc	—	—	—	—	—
	Long-Long Female	Tip: Stainless Steel, Body: Die Cast Zinc	—	—	—	—	—
	Long Male	Tip: Stainless Steel, Body: Die Cast Zinc	—	—	—	—	—
	Long Female	Tip: Stainless Steel, Body: Die Cast Zinc	—	—	—	—	—
	Short-Short Male	Tip: Stainless Steel, Body: Die Cast Zinc	201827-1	201827-1	201827-1	201827-1	201827-1
	Short-Short Female	Tip: Stainless Steel, Body: Die Cast Zinc	201828-1	201828-1	201828-1	201828-1	201828-1
GUIDE HARDWARE Page 9213	Center Male	Stainless Steel	—	—	—	—	—
	Center Female	Stainless Steel	—	—	—	—	—
	Corner Male	Stainless Steel	—	—	—	—	200833-2
	Corner Female	Stainless Steel	—	—	—	—	200835-2
PIN HOODS Pages 9214 and 9215	Internal Open End	Nickel Plated Steel	204258-6	201363-4	—	201785-4	201786-4
	Internal Closed End	Nickel Plated Steel	—	—	—	—	202434-4
	External Closed End	Al Iridite	—	—	—	201349-2	201350-2
	External Closed End	Nickel Plated Steel	—	—	—	—	—

[1] Listed Jackscrews have 6-32 single lead threads. For corresponding Jackscrews with 6-32 double lead threads, refer to pages 9210 and 9211.

For complete product information, order Catalog 82003

Products for Industrial & Commercial Applications
Dimensions are shown for reference purposes only.
Dimensions are in inches and millimeters unless otherwise specified. Values in brackets are metric equivalents.
Specifications subject to change.
Technical Support Center
1-800-522-6752
www.tycoelectronics.com

Cable-to-Panel Selection Guide

1. Confirm that **Application F** (at left) most closely meets your requirements. (Other applications are shown on pages 9176 thru 9185 and 9188 through 9191.)

2. Find the appropriate column for the number of positions required.

3. Select part numbers required for the application listed in the column below the number of positions.

   If a part number is not listed for a particular item, it is not available.

   If more than one part number is listed for a particular hardware item, choose the one which best fits your application.

4. Dimensional information is available on the indicated pages under description column.

5. Select Contacts: Type II (page 9105), Type III+ (pages 9101 thru 9103) or Subminiature Coaxial (pages 9116 and 9117).

Special application housings and posted housings may be substituted for these standard housings. See Special Application and Posted Connectors Sections.

This cable-to-panel application utilizes jackscrews, strain relief clamps and guide hardware. A pin hood is provided for pin protection. Sizes 6, 14, 20, 26, and 41 **do not** use guide hardware for this application.

Number of Positions						Component Description		
41	50	75	104	104 CF	160 CF			
202135-2	201358-1	201310-1	201345-1	—	—	Plug Block Receptacle Block	Phenolic	STANDARD HOUSINGS Pages 9192 to 9199
201302-1	200277-2	201311-1	201037-1	—	—			
202135-4	201358-3	201310-3	201345-2	—	—	Plug Block Receptacle Block	Diallyl Phthalate	
201302-3	200277-4	201311-3	—	—	—			
—	—	—	—	1-201692-6	—	Plug Block Receptacle Block	Polyester	
—	—	—	—	—	—			
—	—	—	201849-1	—	—	Long Short	Nickel Plated Steel	STRAIN RELIEF CLAMPS Page 9220
—	201182-1	200730-1	—	—	—			
201766-1	201847-1	201848-1	—	—	—	Long Short	Stainless Steel	
—	—	—	—	—	—			
201092-1	201092-1	201092-1	201092-1	—	—	Fixed Male Fixed Female	Stainless Steel	
201089-1	201089-1	201089-1	201089-1	—	—			
—	—	—	—	—	—	Long-Long Male	Tip: Stainless Steel Body: Die Cast Zinc	JACKSCREWS[1] Pages 9210 and 9211
—	—	—	—	—	—	Long-Long Female		
—	—	—	—	—	—	Long Male		
—	—	—	—	—	—	Long Female		
201827-1	201827-1	201827-1	201827-1	—	—	Short-Short Male		
201828-1	201828-1	201828-1	201828-1	—	—	Short-Short Female		
—	—	—	—	—	—	Center Male	Stainless Steel	GUIDE HARDWARE Page 9213
—	—	—	—	—	—	Center Female		
—	200833-2	201046-2	201046-2	—	—	Corner Male		
—	200835-2	201047-2	201047-2	—	—	Corner Female		
—	—	—	—	—	—	Internal Open End	Nickel Plated Steel	PIN HOODS Pages 9214 and 9215
—	202394-2	201369-4	201364-4	—	—	Internal Closed End	Nickel Plated Steel	
—	—	—	—	—	—	External Closed End	Al Iridite	
—	201390-5	201368-4	201346-4	—	—	External Closed End	Nickel Plated Steel	

For complete product information, order Catalog 82003

Products for Industrial & Commercial Applications
Dimensions are shown for reference purposes only.
Dimensions are in inches and millimeters unless otherwise specified. Values in brackets are metric equivalents.
Specifications subject to change.
Technical Support Center
1-800-522-6752
www.tycoelectronics.com

Cable-to-Panel Selection Guide

Application

G

Featured Hardware

- Shields (One-piece)
- Pin Hoods
- Locking Springs
- Guide Hardware

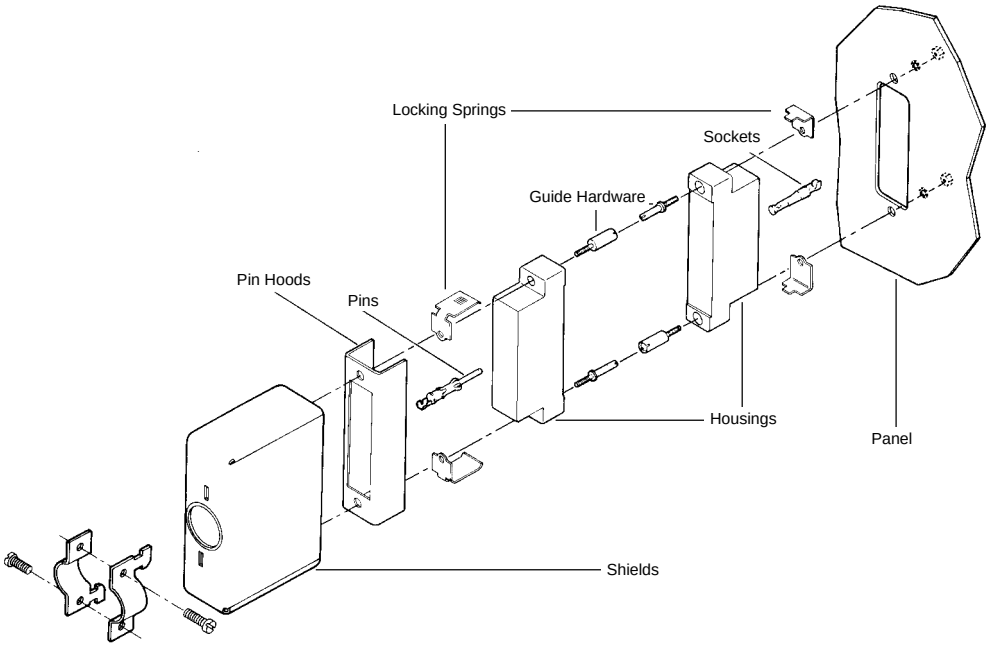

Component Description			Number of Positions				
			6	14	20	26	34
STANDARD HOUSINGS Pages 9192 to 9199	Plug Block	Phenolic	—	201355-1	201356-1	201359-1	1-201357-1
	Receptacle Block	Phenolic	—	201298-1	200346-2	200512-2	200838-2
	Plug Block	Diallyl Phthalate	—	—	201356-3	201359-3	201357-3
	Receptacle Block	Diallyl Phthalate	—	201298-3	200346-4	200512-3	200838-3
	Plug Block	Polyester	—	—	—	—	213800-1
	Receptacle Block	Polyester	—	—	—	—	213802-1
SHIELDS Pages 9216 to 9219	180° Two-Piece Long	Al Anodized	—	—	—	—	—
		Nickel Plated Steel	—	—	—	—	—
	180° Two-Piece Short	Al Anodized	—	—	—	—	—
		Nickel Plated Steel	—	—	—	—	—
		Nickel Plated Cast Al	—	—	—	—	—
	90° Two-Piece Long	Nickel Plated Steel	—	—	—	—	—
	90° Two-Piece Short	Nickel Plated Steel	—	—	—	—	—
	45° Two-Piece Short	Nickel Plated Steel	—	—	—	—	—
	45° Two-Piece Deep	Nickel Plated Steel	—	—	—	—	—
	180° One-Piece Long	Nickel Plated Steel	—	201378-2	—	—	201384-2
	180° One-Piece Short	Nickel Plated Steel	—	201360-2	201227-2	201169-2	201165-2
	90° One-Piece Short	Nickel Plated Steel	—	201467-2	—	—	201469-2
GUIDE HARDWARE Page 9213	Center Male	Stainless Steel	—	200389-2	200389-2	200389-2	200389-2
	Center Female	Stainless Steel	—	200390-2	200390-2	200390-2	200390-2
	Corner Male	Stainless Steel	—	—	—	—	200833-2
	Corner Female	Stainless Steel	—	—	—	—	200835-2
LOCKING SPRINGS[1] Page 9212	Male—Nickel Plated Spring Steel		—	201921-1	201921-1	201923-1	201925-1
	Female—Stainless Steel		—	201922-1	201922-1	—	201926-1
PIN HOODS Pages 9214 and 9215	Internal Open End	Nickel Plated Steel	—	201363-4	—	201785-4	201786-4
	Internal Closed End	Nickel Plated Steel	—	—	—	—	—
	External Closed End	Al Iridite	—	—	—	—	—
	External Closed End	Nickel Plated Steel	—	—	—	—	—

[1] Each part number contains two locking springs. Order one male and one female for each mated pair of connectors.

For complete product information, order Catalog 82003

Products for Industrial & Commercial Applications
Dimensions are shown for reference purposes only.
Dimensions are in inches and millimeters unless otherwise specified. Values in brackets are metric equivalents.
Specifications subject to change.
Technical Support Center
1-800-522-6752
www.tycoelectronics.com

Cable-to-Panel Selection Guide

1. Confirm that **Application G** (at left) most closely meets your requirements. (Other applications are shown on pages 9176 thru 9187, 9190 and 9191.)
2. Find the appropriate column for the number of positions required.
3. Select part numbers required for the application listed in the column below the number of positions.

   If a part number is not listed for a particular item, it is not available.

   If more than one part number is listed for a particular hardware item, choose the one which best fits your application.
4. Dimensional information is available on the indicated pages under description column.
5. Select Contacts: Type II (page 9105), Type III+ (pages 9101 thru 9103) or Subminiature Coaxial (pages 9116 and 9117).

Special application housings and posted housings may be substituted for these standard housings. See Special Application and Posted Connectors Sections.

This cable-to-panel application utilizes locking springs, one-piece shields, a pin hood for pin protection and guide hardware. The shields are available with both 180° and 90° cable exits. The 180° shields are available in a long version which provides pin protection in lieu of a pin hood.

Do not select a long shield and a pin hood.

The 34 and 50 position connectors can be used with either center or corner guide hardware. If center guides are used, an additional four 4-40 screws are required to secure the locking springs. If corner guides are used, an additional two 4-40 screws will be required to attach the shield. Corner guides require four guide pins and four guide sockets for each mated pair.

Number of Positions						Component Description		
41	50	75	104	104 CF	160 CF			
202135-2	201358-1	—	—	—	—	Plug Block / Receptacle Block	Phenolic	STANDARD HOUSINGS Pages 9192 to 9199
201302-1	200277-2	—	—	—	—			
202135-4	201358-3	—	—	—	—	Plug Block / Receptacle Block	Diallyl Phthalate	
201302-3	200277-4	—	—	—	—			
—	—	—	—	1-201692-6	—	Plug Block / Receptacle Block	Polyester	
—	—	—	—	—	—			
—	—	—	—	—	—	180° Two-Piece Long	Al Anodized	SHIELDS Pages 9216 to 9219
—	—	—	—	—	—		Nickel Plated Steel	
—	—	—	—	—	—	180° Two-Piece Short	Al Anodized	
—	—	—	—	—	—		Nickel Plated Steel	
—	—	—	—	—	—		Nickel Plated Cast Al	
—	—	—	—	—	—	90° Two-Piece Long	Nickel Plated Steel	
—	—	—	—	—	—	90° Two-Piece Short		
—	—	—	—	—	—	45° Two-Piece Short		
—	—	—	—	—	—	45° Two-Piece Deep		
—	—	—	—	—	—	180° One-Piece Long		
—	—	—	—	—	—	180° One-Piece Short		
—	—	—	—	—	—	90° One-Piece Short		
200389-2	200389-2	—	—	—	—	Center Male	Stainless Steel	GUIDE HARDWARE Page 9213
200390-2	200390-2	—	—	—	—	Center Female		
—	200833-2	—	—	—	—	Corner Male		
—	200835-2	—	—	—	—	Corner Female		
201921-1	201925-1	—	—	—	—	Male—Nickel Plated Spring Steel		LOCKING SPRINGS[1] Page 9212
201922-1	201926-1	—	—	—	—	Female—Stainless Steel		
—	—	—	—	—	—	Internal Open End	Nickel Plated Steel	PIN HOODS Pages 9214 and 9215
—	—	—	—	—	—	Internal Closed End	Nickel Plated Steel	
—	—	—	—	—	—	External Closed End	Al Iridite	
—	—	—	—	—	—	External Closed End	Nickel Plated Steel	

For complete product information, order Catalog 82003

Products for Industrial & Commercial Applications
Dimensions are shown for reference purposes only.
Dimensions are in inches and millimeters unless otherwise specified. Values in brackets are metric equivalents.
Specifications subject to change.
Technical Support Center
1-800-522-6752
www.tycoelectronics.com

Cable-to-Panel Selection Guide

Application

H

Featured Hardware

- Shields (Two-piece)
- Pin Hoods
- Guide Hardware
- Jackscrews

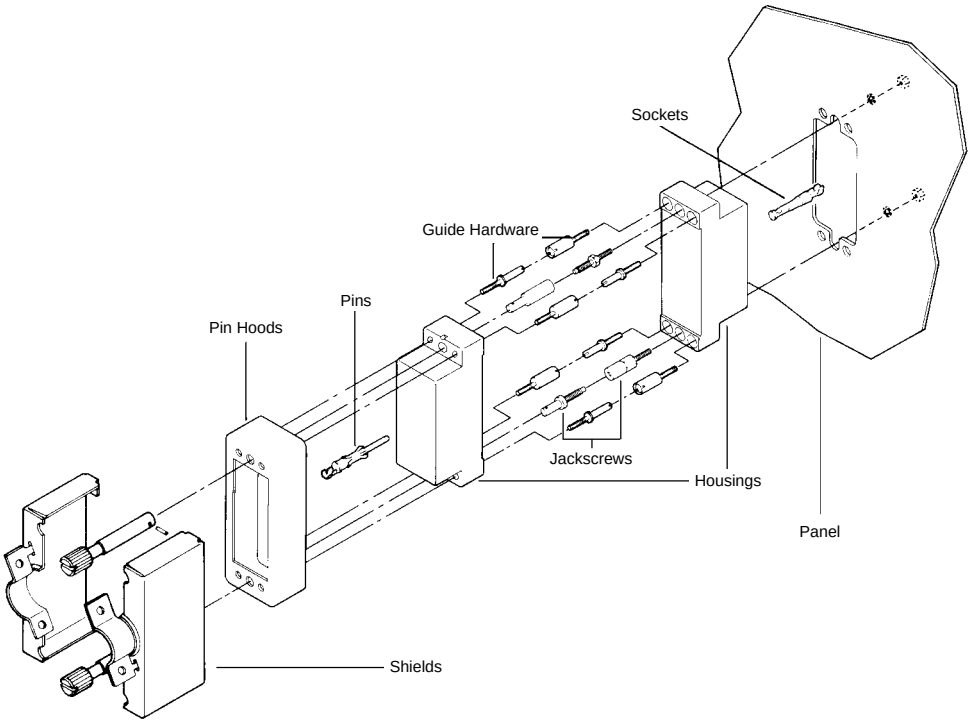

Component Description			Number of Positions				
			6	14	20	26	34
STANDARD HOUSINGS Pages 9192 to 9199	Plug Block	Phenolic	—	—	201356-1	201359-1	1-201357-1
	Receptacle Block	Phenolic	—	—	200346-2	200512-2	200838-2
	Plug Block	Diallyl Phthalate	—	—	201356-3	201359-3	201357-3
	Receptacle Block	Diallyl Phthalate	—	—	200346-4	200512-3	200838-3
	Plug Block	Polyester	—	—	—	—	213800-1
	Receptacle Block	Polyester	—	—	—	—	213802-1
SHIELDS Pages 9216 to 9219	180° Two-Piece Long	Al Anodized	—	—	—	201576-1	201571-1
		Nickel Plated Steel	—	—	—	201576-2	201571-2
	180° Two-Piece Short	Al Anodized	—	—	—	—	200517-1
		Nickel Plated Steel	—	—	204087-1	200514-2	200517-2
		Nickel Plated Cast Al	—	—	—	—	—
	90° Two-Piece Long	Nickel Plated Steel	—	—	—	—	—
	90° Two-Piece Short	Nickel Plated Steel	—	—	—	—	—
	45° Two-Piece Short	Nickel Plated Steel	—	—	—	—	—
	45° Two-Piece Deep	Nickel Plated Steel	—	—	—	—	—
	180° One-Piece Long	Nickel Plated Steel	—	—	—	—	—
	180° One-Piece Short	Nickel Plated Steel	—	—	—	—	—
	90° One-Piece Short	Nickel Plated Steel	—	—	—	—	—
JACKSCREWS[1] Pages 9210 and 9211	Fixed Male	Stainless Steel	—	—	201092-1	201092-1	201092-1
	Fixed Female	Stainless Steel	—	—	201089-1	201089-1	201089-1
	Long-Long Male	Tip: Stainless Steel Body: Die Cast Zinc	—	—	—	—	—
	Long-Long Female	Tip: Stainless Steel Body: Die Cast Zinc	—	—	—	—	—
	Long Male	Tip: Stainless Steel Body: Die Cast Zinc	—	—	201413-1	201413-1	201413-1
	Long Female	Tip: Stainless Steel Body: Die Cast Zinc	—	—	201414-1	201414-1	201414-1
	Short-Short Male	Tip: Stainless Steel Body: Die Cast Zinc	—	—	—	—	—
	Short-Short Female	Tip: Stainless Steel Body: Die Cast Zinc	—	—	—	—	—
GUIDE HARDWARE Page 9213	Center Male	Stainless Steel	—	—	—	—	—
	Center Female	Stainless Steel	—	—	—	—	—
	Corner Male	Stainless Steel	—	—	—	—	200833-2
	Corner Female	Stainless Steel	—	—	—	—	200835-2
PIN HOODS Pages 9214 and 9215	Internal Open End	Nickel Plated Steel	—	—	—	—	201786-4
	Internal Closed End	Nickel Plated Steel	—	—	—	—	202434-4
	External Closed End	Al Iridite	—	—	—	—	201350-2
	External Closed End	Nickel Plated Steel	—	—	—	—	—

[1] Listed Jackscrews have 6-32 single lead threads. For corresponding Jackscrews with 6-32 double lead threads, refer to pages 9210 and 9211

Products for Industrial & Commercial Applications
Dimensions are shown for reference purposes only.
Dimensions are in inches and millimeters unless otherwise specified. Values in brackets are metric equivalents.
Specifications subject to change.
Technical Support Center
1-800-522-6752
www.tycoelectronics.com

Cable-to-Panel Selection Guide

1. Confirm that **Application H** (at left) most closely meets your requirements. (Other applications are shown on pages 9176 thru 9189.)
2. Find the appropriate column for the number of positions required.
3. Select part numbers required for the application listed in the column below the number of positions.

   If a part number is not listed for a particular item, it is not available.

   If more than one part number is listed for a particular hardware item, choose the one which best fits your application.
4. Dimensional information is available on the indicated pages under description column.
5. Select Contacts: Type II (page 9105), Type III+ (pages 9101 thru 9103) or Subminiature Coaxial (pages 9116 and 9117).

Special application housings and posted housings may be substituted for these standard housings. See Special Application and Posted Connectors Sections.

This cable-to-panel application utilizes jackscrews, a two-piece short shield, a strain relief clamp, a pin hood for pin protection and guide hardware.

Do not use a pin hood in combination with the shield for sizes 20, 26 and 41. A long shield may be used in lieu of pin hood for pin protection for all sizes except the 20 position. Shields are available with 180° cable exit and for the 50 thru 104 position connectors, a 90° cable exit. 104 CF has 90° and 45° cable exits. 160 CF has 45° cable exit.

Select the appropriate jackscrew length for the type of shield chosen as indicated by symbol (△▲).

Number of Positions						Component Description		
41	50	75	104	104 CF	160 CF			
202135-2	201358-1	201310-1	201345-1	201692-4	202799-2	Plug Block / Receptacle Block	Phenolic	STANDARD HOUSINGS Pages 9192 to 9199
201302-1	200277-2	201311-1	201037-1	201532-4	202800-2			
202135-4	201358-3	201310-3	201345-2	201692-3	202799-1	Plug Block / Receptacle Block	Diallyl Phthalate	
201302-3	200277-4	201311-3	—	201532-2	202800-1			
—	—	—	—	1-201692-6	—	Plug Block / Receptacle Block	Polyester	
—	—	—	—	—	—			
—	201443-1△	—	—	—	—	180° Two-Piece Long	Al Anodized	SHIELDS Pages 9216 to 9219
202383-2	201443-2△	202713-2▲	204173-2▲	—	—		Nickel Plated Steel	
—	200532-1△	—	—	—	—	180° Two-Piece Short	Al Anodized	
202383-1	200532-2△	202713-1▲	204173-1▲	—	—		Nickel Plated Steel	
—	—	—	201131-1△	—	—		Nickel Plated Cast Al	
—	203975-2▲	202711-3▲	—	—	—	90° Two-Piece Long	Nickel Plated Steel	
—	203975-1▲	202711-1▲	—	202395-1	—	90° Two-Piece Short		
—	—	—	—	202110-1	202798-1	45° Two-Piece Short		
—	—	—	—	202169-1	—	45° Two-Piece Deep		
—	—	—	—	—	—	180° One-Piece Long		
—	—	—	—	—	—	180° One-Piece Short		
—	—	—	—	—	—	90° One-Piece Short		
201092-1	201092-1	201092-1	201092-1	—	—	Fixed Male / Fixed Female	Stainless Steel	JACKSCREWS[1] Pages 9210 and 9211
201089-1	201089-1	201089-1	201089-1	—	—			
—	207234-1▲	207234-1▲	207234-1▲	—	—	Long-Long Male	Tip: Stainless Steel / Body: Die Cast Zinc	
—	207235-1▲	207235-1▲	207235-1▲	—	—	Long-Long Female		
201413-1	201413-1△	201413-1△	201413-1△	—	—	Long Male		
201414-1	201414-1△	201414-1△	201414-1△	—	—	Long Female		
—	—	—	—	—	—	Short-Short Male		
—	—	—	—	—	—	Short-Short Female		
—	—	—	—	—	—	Center Male / Center Female / Corner Male / Corner Female	Stainless Steel	GUIDE HARDWARE Page 9213
—	—	—	—	—	—			
—	200833-2	201046-2	201046-2	202173-5	201046-2			
—	200835-2	201047-2	201047-2	202174-1	201047-2			
—	—	—	—	—	—	Internal Open End	Nickel Plated Steel	PIN HOODS Pages 9214 and 9215
—	202394-2	201369-4	201364-4	—	203743-4	Internal Closed End	Nickel Plated Steel	
—	—	—	—	—	—	External Closed End	Al Iridite	
—	201390-5	201368-4	201346-4	202119-2	203744-4	External Closed End	Nickel Plated Steel	

For complete product information, order Catalog 82003

Standard Housings

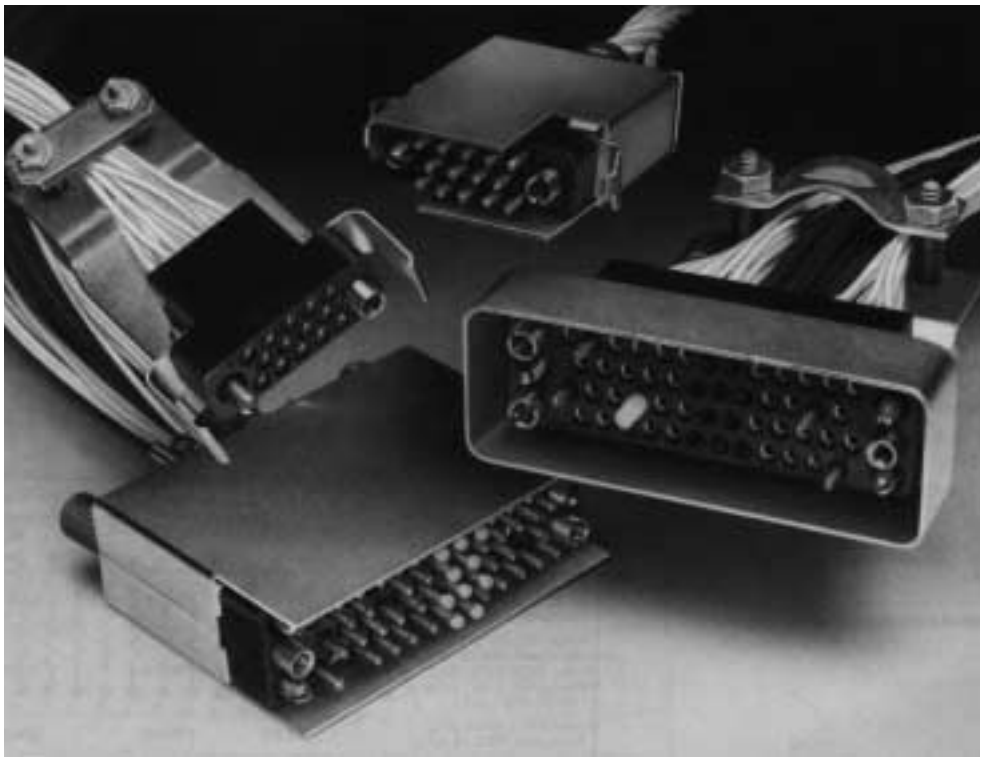

Standard connectors are furnished as unloaded housings that have Multimate contact cavities for accepting Type II, Type III+, and subminiature COAXICON crimp-type contacts, as well as Type III+ solder-type and posted contacts. All Multimate contacts are interchangeable in the same housing cavity.

Standard connector housings are available in sizes ranging from 6 thru 160 positions. They mate with each other, as well as posted connectors of a corresponding size for hand tool and semiautomatic machine wiring. See Posted Connector section.

Standard Housings

6 Position

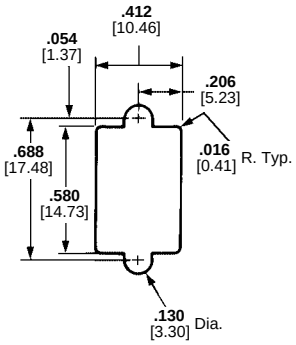

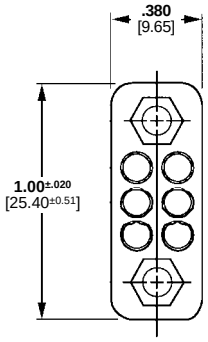

Recommended Panel Cutout

Plug Housing
Phenolic Part No. 202758-1
Diallyl Phthalate Part No. 202758-3

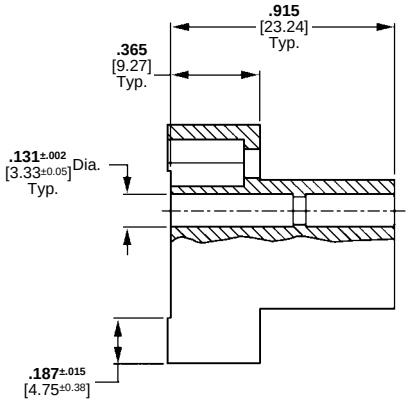

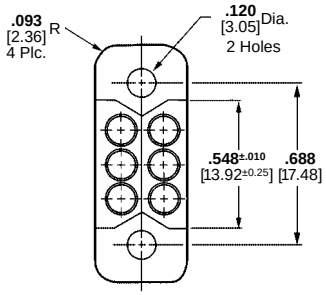

Receptacle Housing
Phenolic Part No. 202757-1
Diallyl Phthalate Part No. 202757-3

14 Position

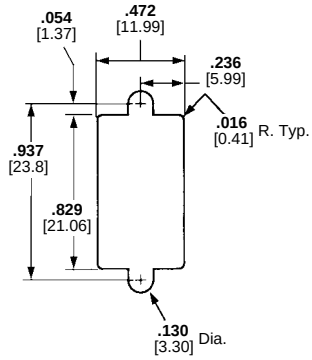

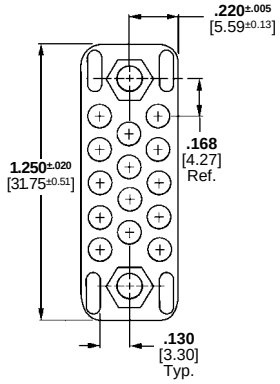

Recommended Panel Cutout

Plug Housing
Phenolic Part No. 201355-1

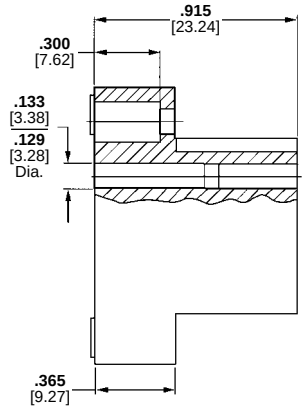

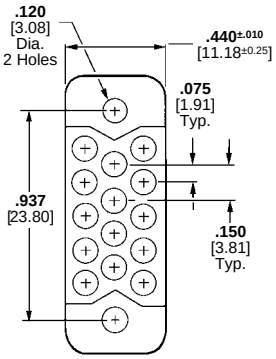

Receptacle Housing
Phenolic Part No. 201298-1
Diallyl Phthalate Part No. 201298-3

20 Position

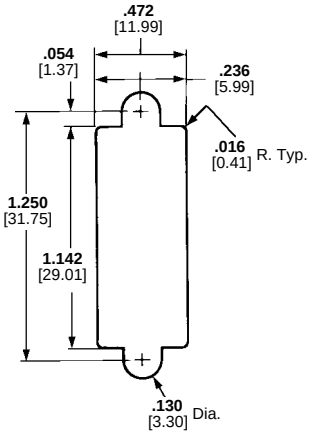

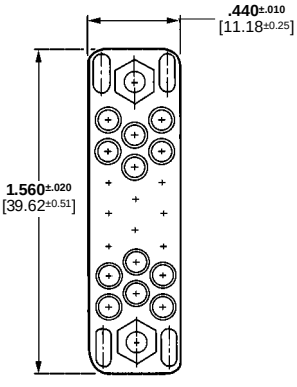

Recommended Panel Cutout

Plug Housing
Phenolic Part No. 201356-1
Diallyl Phthalate Part No. 201356-3

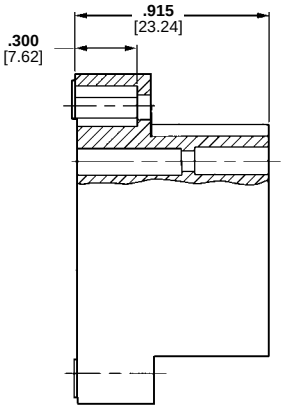

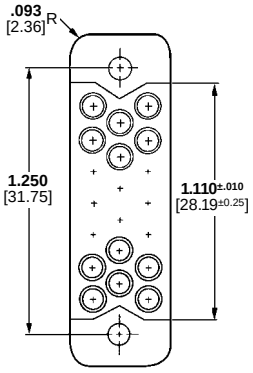

Receptacle Housing
Phenolic Part No. 200346-2
Diallyl Phthalate Part No. 200346-4

Notes: 1. All housings accept Type II, Type III+, and Subminiature COAXICON contacts.
2. Pins and/or sockets may be used in any housing.
3. Dimensions are ±.005 [0.127].
4. Housing cavity identification are mirror image.

For complete product information, order Catalog 82003

Products for Industrial & Commercial Applications
Dimensions are shown for reference purposes only.
Dimensions are in inches and millimeters unless otherwise specified. Values in brackets are metric equivalents.
Specifications subject to change.
Technical Support Center
1-800-522-6752
www.tycoelectronics.com

Standard Housings

26 Position

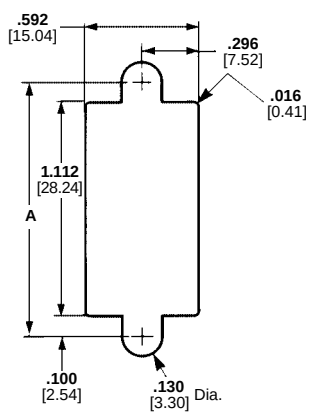

Recommended Panel Cutout

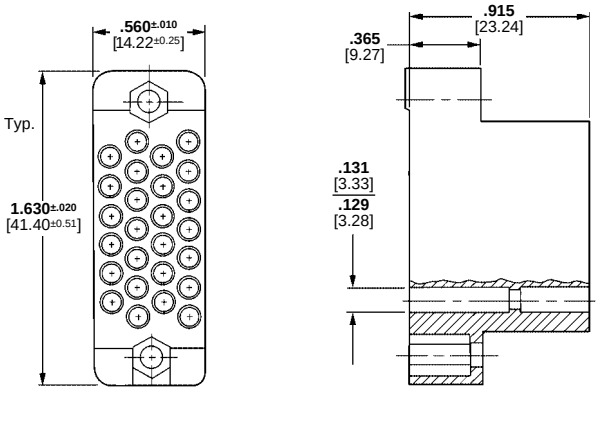

Plug Housing (Shown)

34 Position

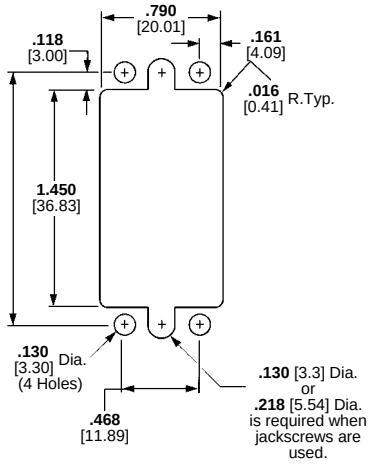

Recommended Panel Cutout

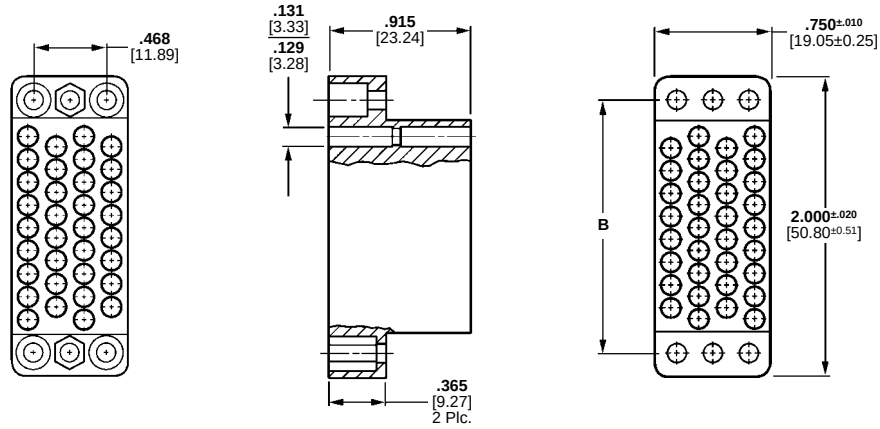

Plug Housing (Shown)

36 Position

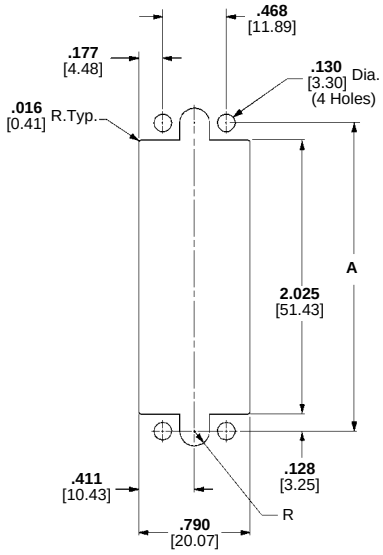

Recommended Panel Cutout

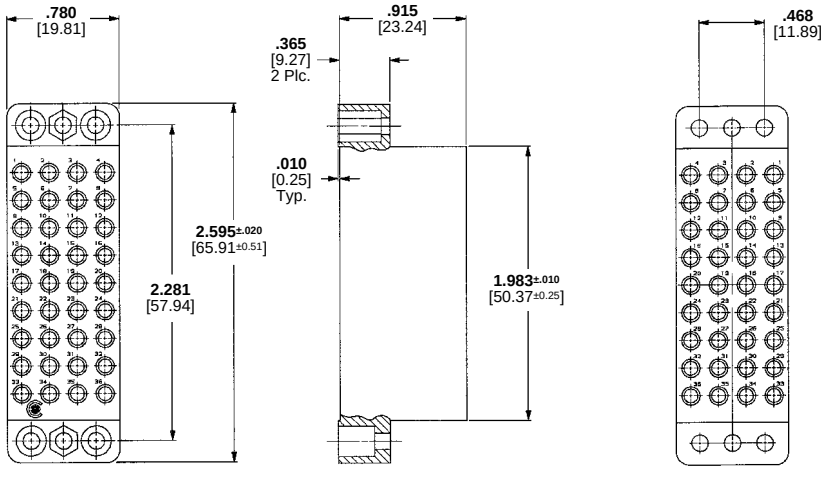

Plug Housing (Shown)

For complete product information, order Catalog 82003

Products for Industrial & Commercial Applications

Dimensions are shown for reference purposes only.

Dimensions are in inches and millimeters unless otherwise specified. Values in brackets are metric equivalents.

Specifications subject to change.

Technical Support Center
1-800-522-6752
www.tycoelectronics.com

Standard Housings

26, 34 and 36 Positions
(Continued)

No. of Pos.	Housing Material	Plug Part Number	Dimension A	Receptacle Part Number	Dimension B
26	Phenolic	201359-1	**1.312** 33.32	200512-2	**1.312** 33.32
	Diallyl Phthalate	201359-3	**1.322** 33.58	200512-3	**1.322** 33.58
34	Phenolic	1-201357-1		200838-2	
	Polyester	213799-1 (Modified)	**1.686** 42.82	213801-1 (Modified)	**1.686** 42.82
		213800-1 213800-2		213802-1 —	
	Diallyl Phthalate	201357-3	**1.696** 43.08	200838-3	**1.696** 43.08
36	Phenolic	203956-2	**2.281** 57.94	—	—

Notes: 1. All housings accept Type II, Type III+, and Subminiature COAXICON contacts.
2. Pins and/or sockets may be used in any housing.
3. Dimensions are ±.005 [0.127].
4. Housing cavity identification are mirror image.
5. Versions also available with notch for robotic assembly. Consult Tyco Electronics Corporation.

Related Product Data

Dimensions—Page 9194

41 Position

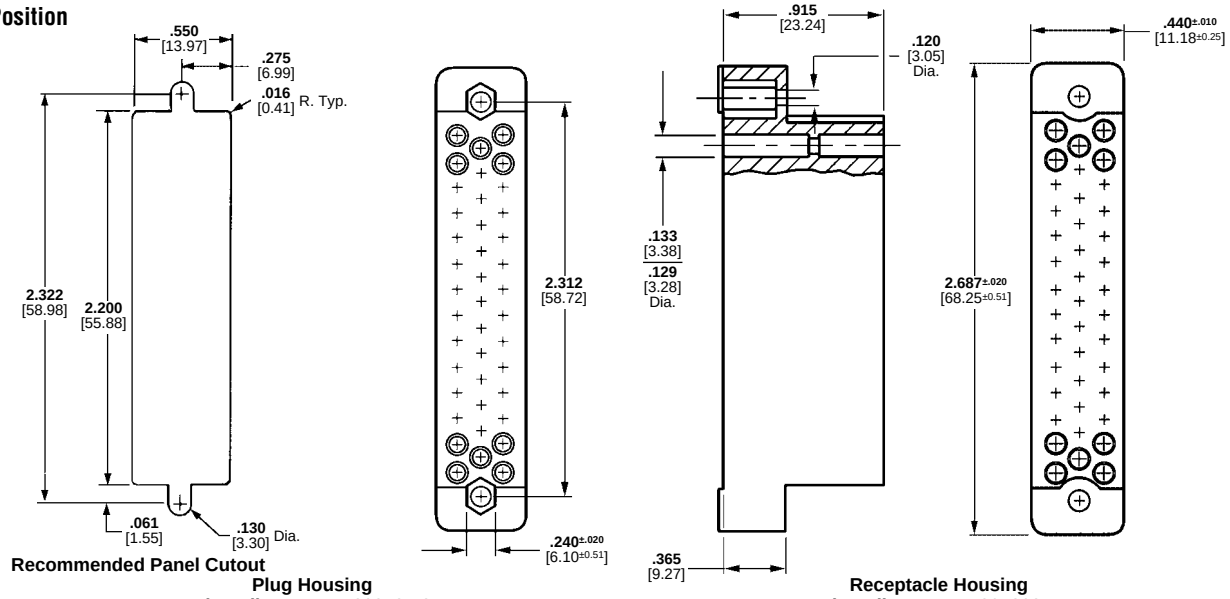

Recommended Panel Cutout

Plug Housing
Phenolic Part No. 202135-2
Diallyl Phthalate Part No. 202135-4

Receptacle Housing
Phenolic Part No. 201302-1
Diallyl Phthalate Part No. 201302-3

50 Position

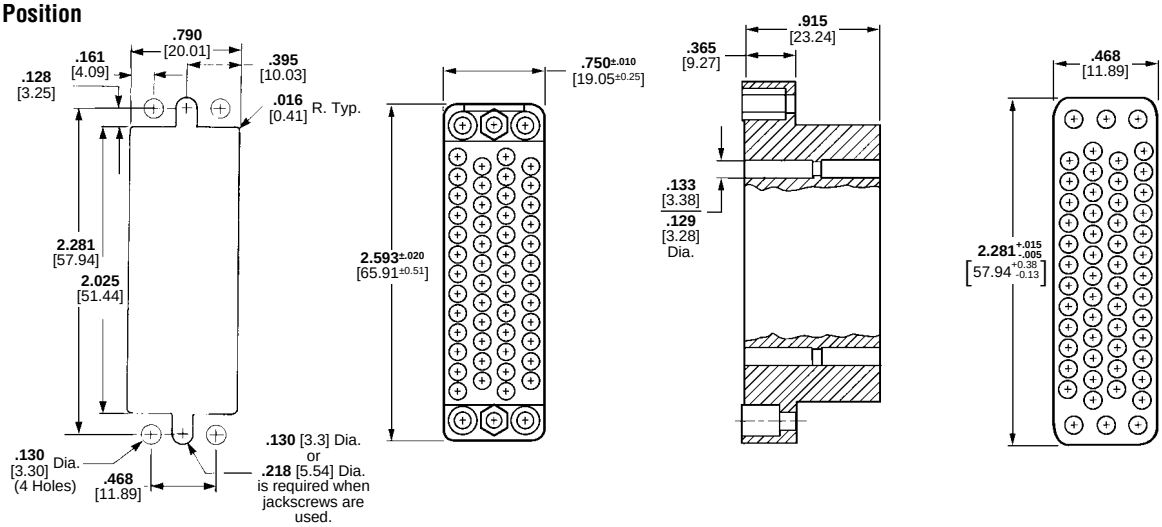

Recommended Panel Cutout

Plug Housing
Phenolic Part No. 201358-1
Diallyl Phthalate Part No. 201358-3

Receptacle Housing
Phenolic Part No. 200277-2
Diallyl Phthalate Part No. 200277-4

Standard Housings

50 Position

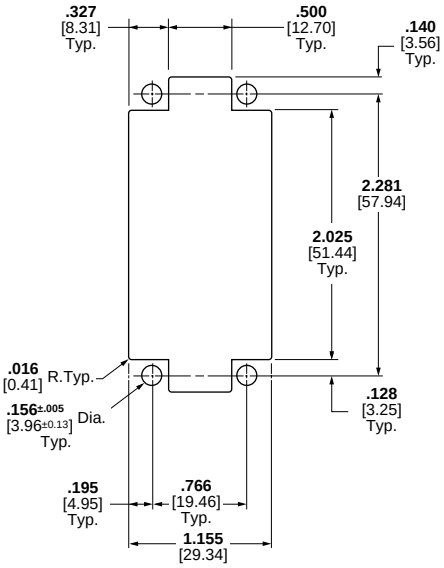

Recommended Panel Cutout

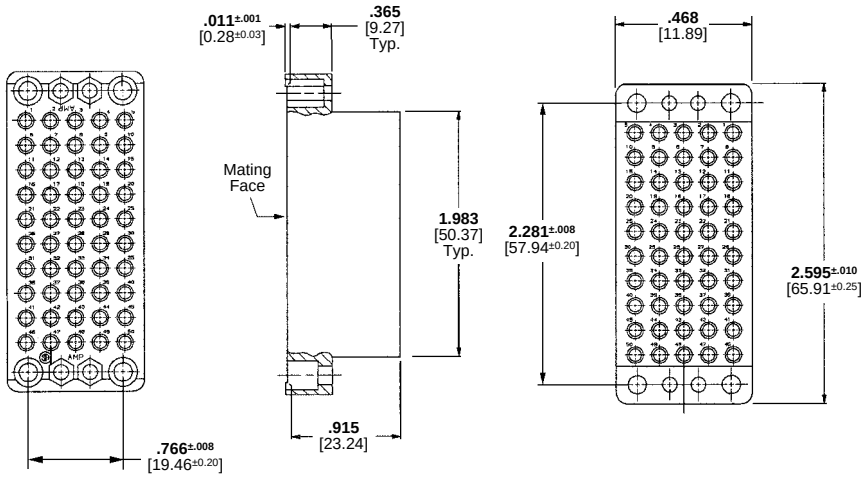

Plug Housing
Phenolic Part No. 203622-2
(Mating face contact cavities numbered left to right.)

50 Position

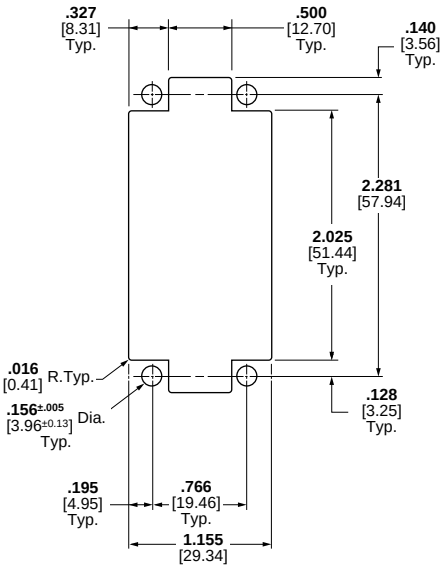

Recommended Panel Cutout

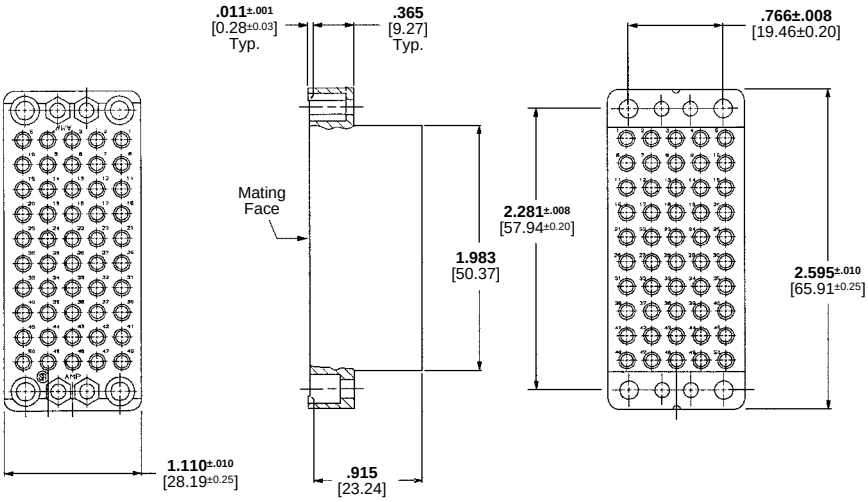

Plug Housing
Phenolic Part No. 205058-2
(Mating face contact cavities numbered right to left.)

For complete product information, order Catalog 82003

Products for Industrial & Commercial Applications

Dimensions are shown for reference purposes only.

Dimensions are in inches and millimeters unless otherwise specified. Values in brackets are metric equivalents.

Specifications subject to change.

Technical Support Center
1-800-522-6752
www.tycoelectronics.com

Standard Housings

75 Position

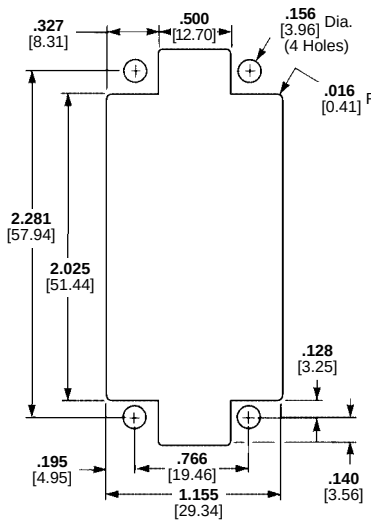

Recommended Panel Cutout

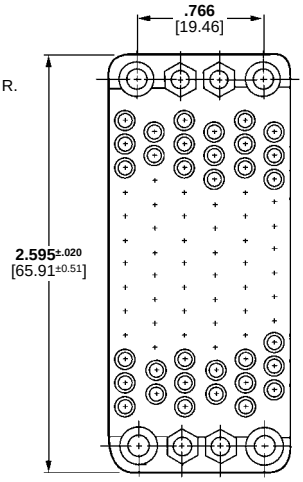

Plug Housing
Phenolic Part No. 201310-1
Diallyl Phthalate Part No. 201310-3

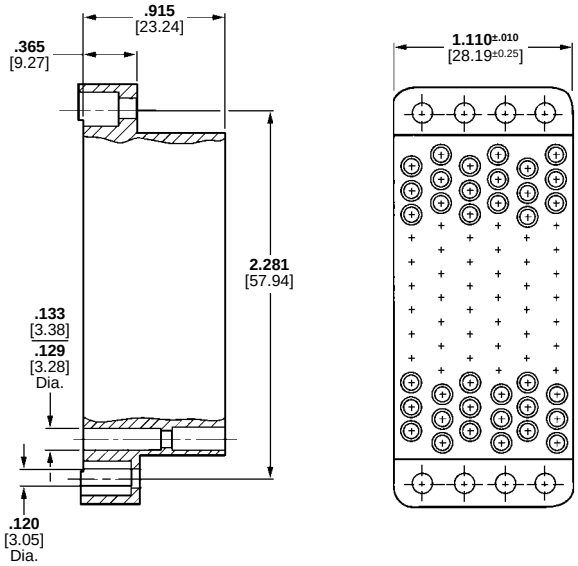

Receptacle Housing
Phenolic Part No. 201311-1
Diallyl Phthalate Part No. 201311-3

104 Position

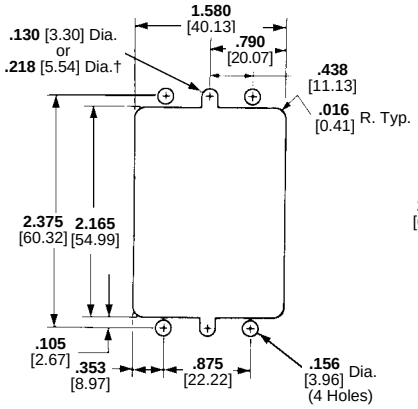

†**.218** [5.54] diameter is required when jackscrews are used.

Recommended Panel Cutout

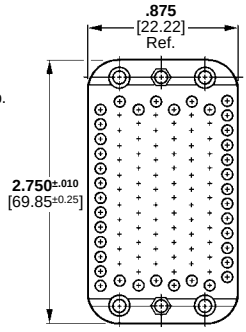

Plug Housing
Phenolic Part No. 201345-1

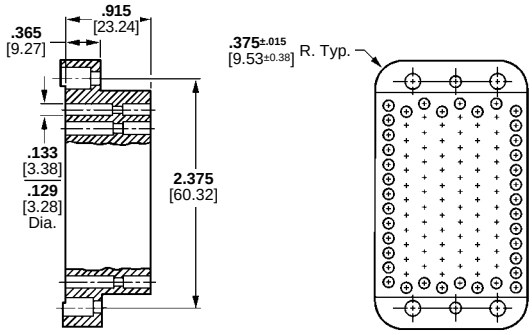

Receptacle Housing
Phenolic Part No. 201037-1

Notes: 1. All housings accept Type II, Type III+, and Subminiature COAXICON contacts.
2. Pins and/or sockets may be used in any housing.
3. Dimensions are ±.005 [0.127].
4. Housing cavity identification are mirror image.

For complete product information, order Catalog 82003

Products for Industrial & Commercial Applications
Dimensions are shown for reference purposes only.
Dimensions are in inches and millimeters unless otherwise specified. Values in brackets are metric equivalents.
Specifications subject to change.
Technical Support Center
1-800-522-6752
www.tycoelectronics.com

Standard Housings

104 CF Position (with Center Fastener)

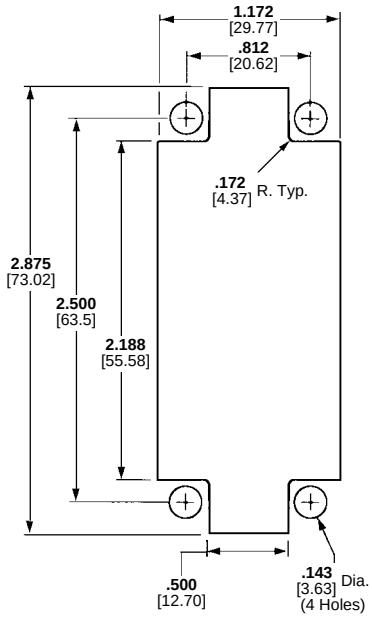

Recommended Panel Cutout

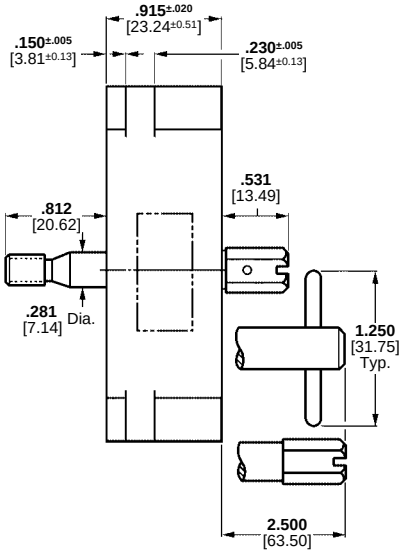

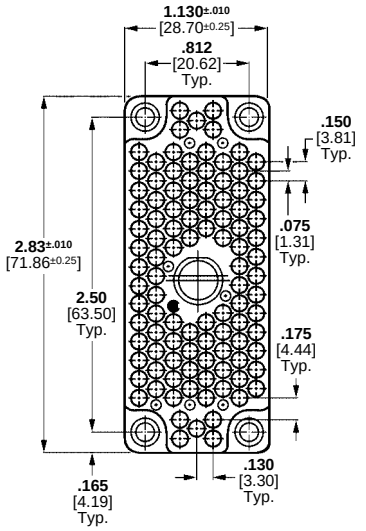

Plug Housing

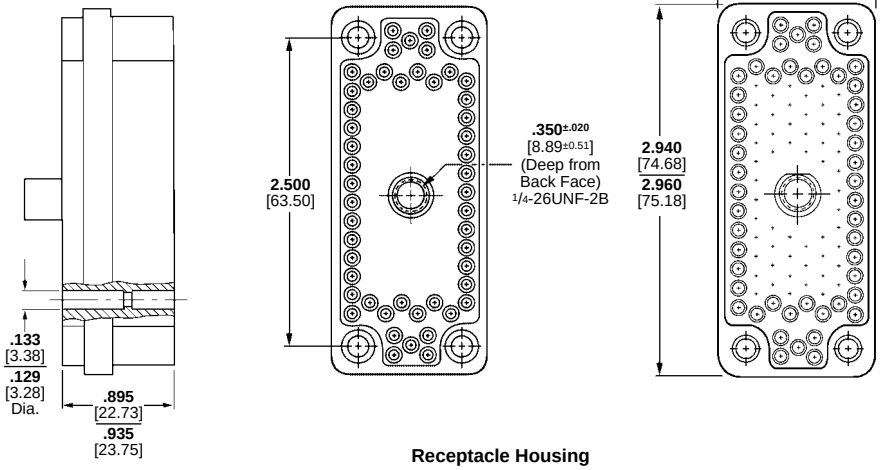

Receptacle Housing

Center Fastener		Plug Housing Part No.			Receptacle Housing Part No.		
Description	Length	Phenolic	Diallyl Phthalate	Polyester	Phenolic	Diallyl Phthalate	Polyester
"T" Handle	**2.500** 63.50	201692-4	201692-3	1-201692-6			
Slotted Hex	**2.500** 63.50	201692-6	—	—	201532-4	201532-2	—
Slotted Hex	**.531** 13.49	201692-2	—	—			

Notes: 1. All housings accept Type II, Type III+, and Subminiature COAXICON contacts.
2. Pins and/or sockets may be used in any housing.
3. Dimensions are ±.005 [0.127].
4. Housing cavity identification are mirror image.

For complete product information, order Catalog 82003

Products for Industrial & Commercial Applications
Dimensions are shown for reference purposes only.
Dimensions are in inches and millimeters unless otherwise specified. Values in brackets are metric equivalents.
Specifications subject to change.
Technical Support Center
1-800-522-6752
www.tycoelectronics.com

Standard Housings

160 CF Position (with Center Fastener)

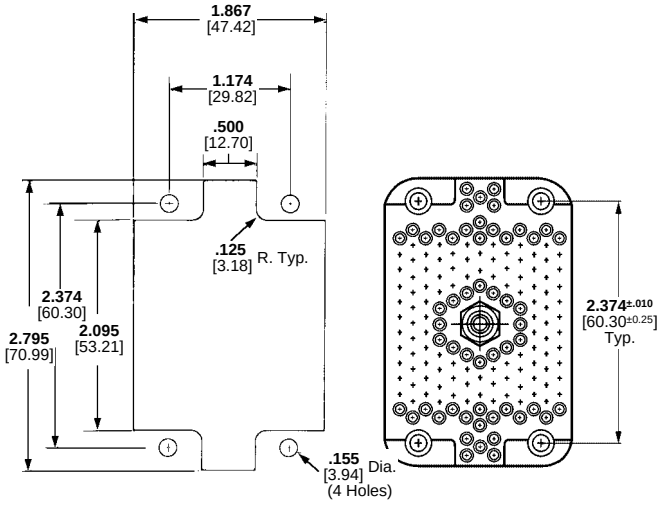

Recommended Panel Cutout

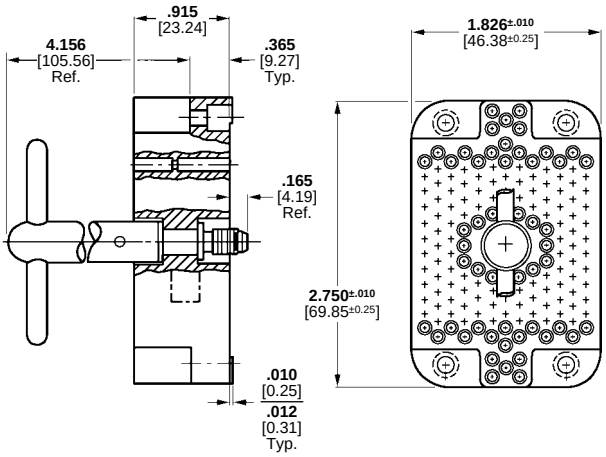

Plug Housing
Phenolic Part No. 202799-2
Diallyl Phthalate Part No. 202799-1

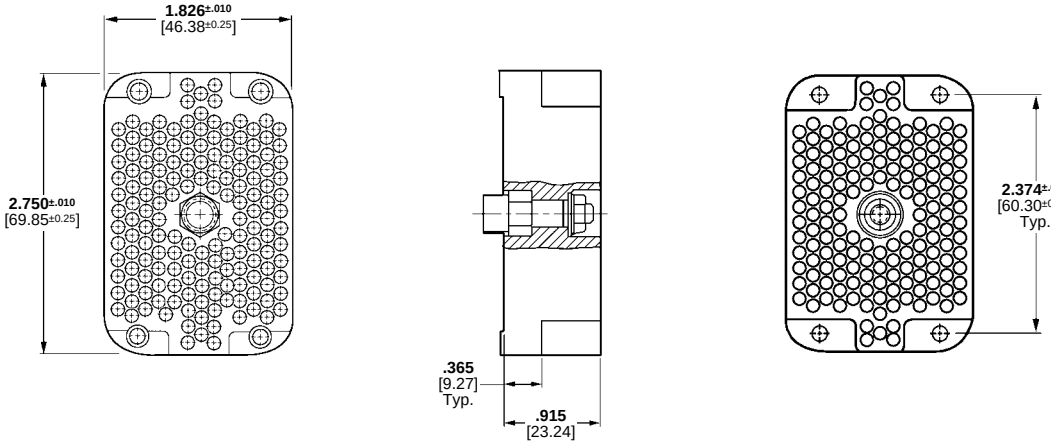

Receptacle Housing
Phenolic Part No. 202800-2
Diallyl Phthalate Part No. 202800-1

Notes: 1. All housings accept Type II, Type III+, and Subminiature COAXICON contacts.
2. Pins and/or sockets may be used in any housing.
3. Dimensions are ±.005 [0.127].
4. Housing cavity identification are mirror image.

For complete product information, order Catalog 82003

Products for Industrial & Commercial Applications
Dimensions are shown for reference purposes only.
Dimensions are in inches and millimeters unless otherwise specified. Values in brackets are metric equivalents.
Specifications subject to change.
Technical Support Center
1-800-522-6752
www.tycoelectronics.com

Posted Connectors



Posted connectors are furnished preloaded with Size 16, posted contacts and are specifically designed to be wired with hand tools and semiautomatic machines. The cavity centerline spacing is too close to accommodate the heads and mandrels of fully automatic machines. Post configurations of the preloaded contacts are available for accepting TERMI-POINT Clip and wrap-type terminations.

Posted connector housings are made of black phenolic or diallyl phthalate and are available in sizes ranging from 6 thru 104 positions. They will mate with correspondingly sized standard connector (except .200 [5.08] grid) housings loaded with Size 16 crimp-type contacts. It is not recommended to mate two posted connectors. Since the preloaded posted contacts are rigid in the housing, mating two posted connectors, particularly of the larger sizes, would be difficult.

Posted connectors can be substituted for standard connectors in the Connector/ Hardware Selection Charts, pages 9176 to 9191. Request Catalog 82003 for complete information on posted connectors.

Tyco does not recommend the use of shields or strain relief clamps with posted connectors because of the potential of shorting.

Special Application Connectors

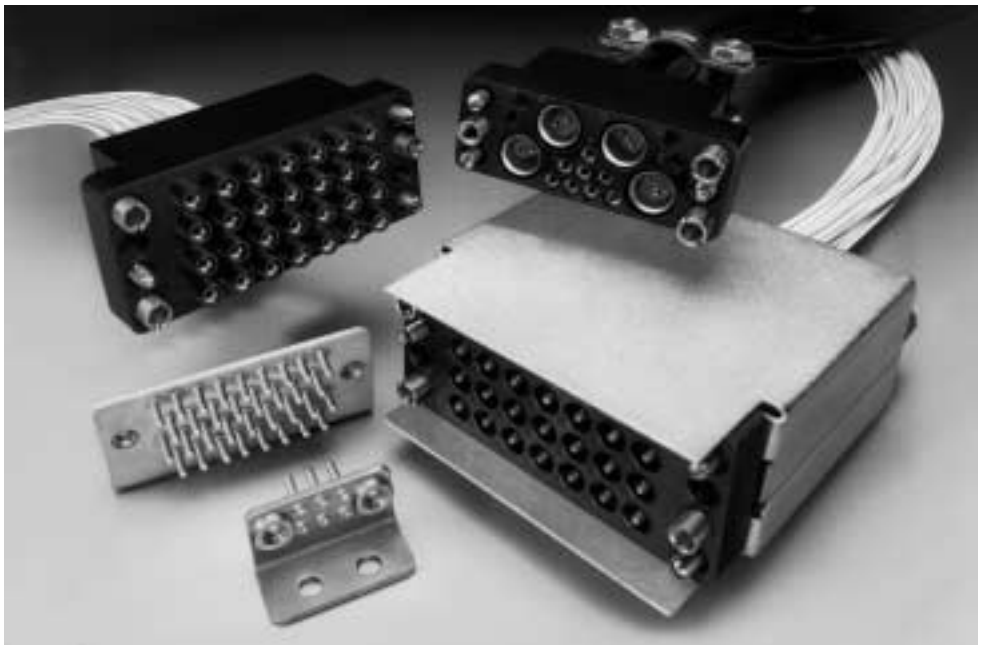

V.35 Connector

The 34 position V.35 Connector is fully assembled and ready for placement on a printed circuit board. They are also available in kit form for cable assembly. These AMP V.35 connectors meet the requirements of 408-2593 for CCITT V.35 interfacing. AMP V.35 connectors are described on the following pages.

The following Special Application Connectors are described in Catalog 82003:

High current connectors are designed for applications requiring up to 25 amperes of current. They are available in 12-position male and female housings which have rectangular contact cavities for accepting Type XII contacts.

Mixed connectors are designed for applications that require intermixing signal, power and/or coaxial circuits in the same connector housing. Housings are available in 15-, 16-, 29 CF (center fastener) and 42-position sizes and, depending upon the specific configuration, will accept Multimate contacts, Type I and Miniature, Standard and Twin Standard COAXICON contacts. The rectangular contact cavities accept Type XII contacts.

High voltage connectors are designed for high voltage applications using Multimate contacts. The cavity centerline spacings and the silo construction of the contact cavities increase the current creepage path for higher voltage ratings. Housing sizes include 20 and 28 positions.

RFI/EMI shielding kits provide shielding capabilities against radio frequency and electromagnetic interferences. Special 104-position housings accept Multimate contacts and are especially designed for use with shielding hardware. These shielding kits cannot be used with the standard 104-position connector housings.

Grounding blocks are ideally suited for aircraft applications, where shielded cable is to be grounded to an airframe. The ground wires of shielded cables are pigtailed off with ferrules and are crimped to Size 16 socket contacts. The contacts are loaded into a standard 14- or 34-position connector housing. This connector then can be mated to the grounding block which is fastened to the aircraft frame. Grounding blocks have Size 16 screw-machined pin contacts which are staked, riveted and soldered into the L-shaped metal bracket. The bracket has fixed jackscrew receptacles that will accept the special turnable jack-screws fastened to the mating socket connector half.

For complete product information, order Catalog 82003

Products for Industrial & Commercial Applications
Dimensions are shown for reference purposes only.
Dimensions are in inches and millimeters unless otherwise specified. Values in brackets are metric equivalents.
Specifications subject to change.
Technical Support Center
1-800-522-6752
www.tycoelectronics.com

M Series V.35 Special Application Connectors

Product Facts

- Meets requirements of 408-2593 for CCITT V.35 interface
- Pcb connectors fully assembled, right-angle and vertical mount
- Mounting bracket secures pcb connector to board
- Pcb connectors preloaded with Size 16 contacts
- Right-angle connector features true position location wafer
- Intermateable with comparable M Series connectors
- Cable connector kits available with 1-piece stamped and formed shield or new, more durable die cast 2-piece shield
- Cable connectors accept Size 16, Type III+ strip form or loose piece contacts
- Housings made of UL 94V-0 rated flame retardant material
- Recognized under the Component Program of the Underwriters Laboratories Inc. for 250 volts, File No. E28476
- Certified by Canadian Standards Association, File No. LR7189

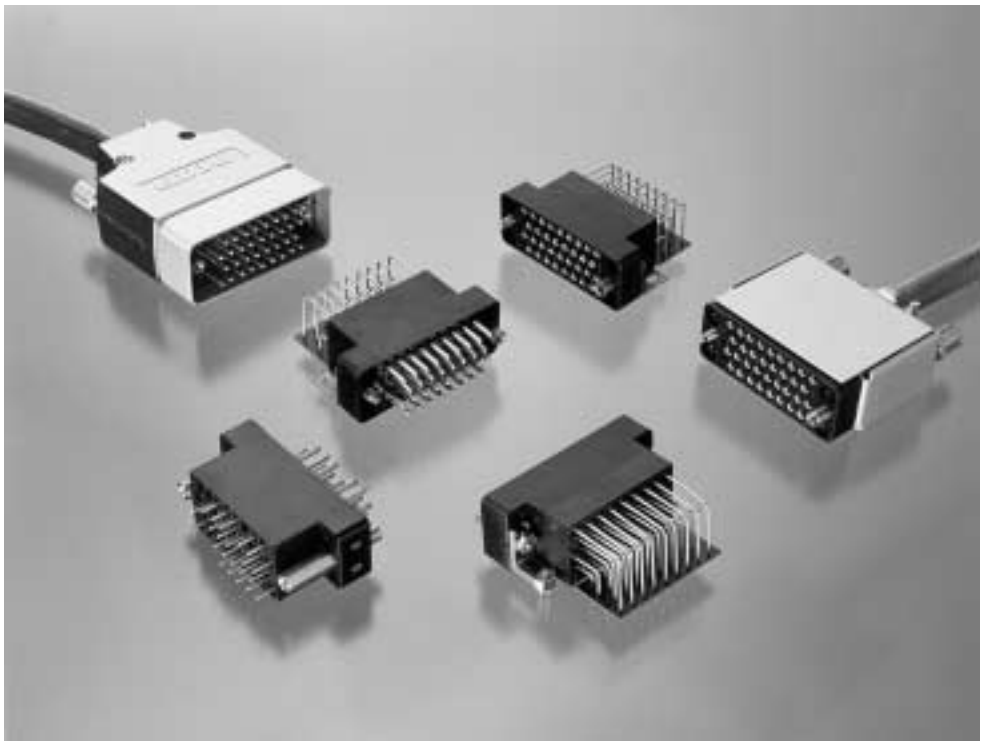

The 34-position V.35 includes both printed circuit board mount and cable mount configurations.

The pcb connectors are fully assembled and ready for placement on printed circuit boards. Available in vertical or right-angle mount versions, they offer dependable, convenient assembly in high-speed data transmission applications. Connectors are preloaded with economical, dependable Size 16 precision stamped and formed contacts. Contact posts feature a chamfered lead-in that eases assembly to the pc boards. A mounting bracket for securing the connector to the pc board is standard equipment. Right-angle pcb connectors feature true position, location wafers that provide for the exact location of each post. Both the right-angle and vertical mount pcb connectors are fully mateable with comparable M Series connectors.

Cable connector assemblies are offered in kit form. Each kit contains: a 34-position housing; one-piece or two-piece shield; two, one-piece turnable jackscrews; strain relief clamp; and necessary mounting screws. Shields are offered in an economical one-piece stamped and formed version or a more durable two-piece die cast version. A choice of die cast zinc, nickel plated or stainless steel turnable jackscrews are available. Cable connectors accept Size 16, Type III+ pin and socket contacts. (Contacts sold separately, see Catalog 82003)

AMP M Series V.35 Special Application Connectors meet the requirements of ISO 2593 for CCITT V.35 interface.

Technical Documents

Product Specifications
108-10001 M Series Connectors
108-10042 Type III+ Contacts

Application Specification
114-10004 Type III+ Contacts

Instruction Sheet
408-9731 M Series V.35 Cable Connector Kits

For complete product information, order Catalog 82003

Products for Industrial & Commercial Applications
Dimensions are shown for reference purposes only.
Dimensions are in inches and millimeters unless otherwise specified. Values in brackets are metric equivalents.
Specifications subject to change.
Technical Support Center
1-800-522-6752
www.tycoelectronics.com

M Series V.35 Printed Circuit Board Connectors

Right-Angle Receptacle Assembly



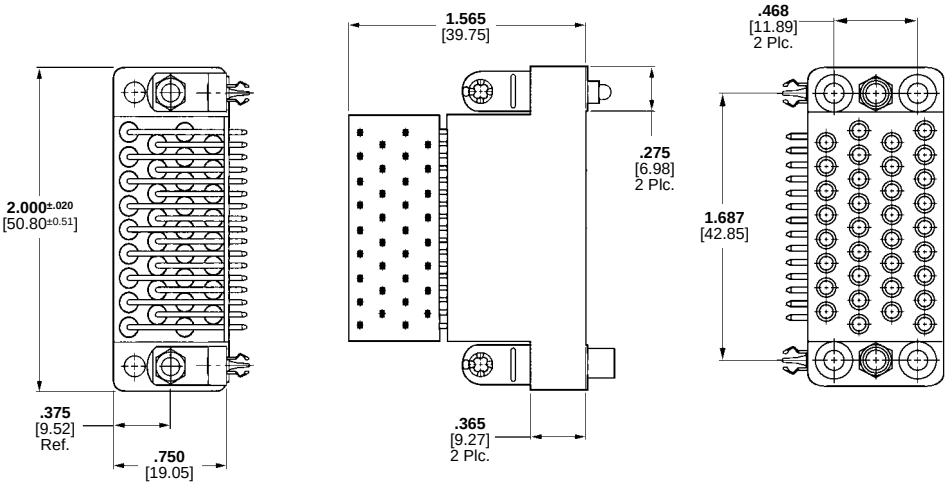

Material and Finish

Housing—Flame retardant phenolic or polyester, black

Contacts—Brass, plated:
a) .000030 [0.00076] gold min. in mating area, .000050 [0.00127] nickel min. underplating overall

Contact Spring—Stainless steel

Contact Post—Brass, tin-lead plated

Mounting Bracket—Brass, tin-nickel plated or zinc, nickel plated

Boardlocks—Copper alloy, tin-lead plated

Location Wafer—Phenolic

Nuts and Lockwashers—Steel, zinc plated

Jackscrews—Stainless steel

No. of Pos.	Mounting Bracket	PCB Dimensions A	PCB Dimensions B	Boardlocks	Housing Material	Select Load Pattern	Part Number
34	Brass, Tin-Nickel Plated	**.555** 14.10	*	No	Phenolic	Fully Loaded	212810-2
14		**.555** 14.10	*	No	Phenolic	B, C, D, E, F, H, P, R, S, T, V, X, Y, AA	1-212810-1
27		**.555** 14.10	*	No	Phenolic	A, B, C, D, E, F, H, J, P, R, S, T, U, V, W, X, Y, AA, BB, CC, DD, FF, HH, JJ, KK, LL, NN	1-212810-5
34	Zinc, Nickel Plated	**.572** 14.53	**.347** 8.81	Yes	Phenolic	Fully Loaded	213574-2
17		**.572** 14.53	**.347** 8.81	Yes	Phenolic	A, B, C, D, E, F, H, P, R, S, T, U, V, W, X, Y, AA	213574-4
23		**.572** 14.53	**.347** 8.81	Yes	Phenolic	A, B, C, D, E, F, H, J, K, L, N, P, R, S, T, U, V, W, X, Y, AA, BB, NN	213574-6
22		**.572** 14.53	**.347** 8.81	Yes	Phenolic	A, B, C, D, E, F, H, K, L, N, P, R, S, T, U, V, W, X, Y, AA, BB, NN	213574-7
22		**.555** 14.10	**.330** 8.38	Yes	Phenolic	A, B, C, D, E, F, H, J, L, N, P, R, S, T, U, V, W, X, Y, AA, HH, NN	213574-8

No. of Pos.	Mounting Bracket	PCB Dimensions A	PCB Dimensions B	Boardlocks	Housing Material	Select Load Pattern	Part Number
34	Brass, Tin-Nickel Plated	**.555** 14.10	*	No	Polyester	Fully Loaded	213806-1
34	None	—	*	No	Polyester	Fully Loaded	213806-4
19	Brass, Tin-Nickel Plated	**.555** 14.10	*	No	Polyester	A, B, C, D, E, F, H, J, L, P, R, S, T, U, V, W, X, Y, AA — Hardware Supplied Unassembled	213806-2
18	None	—	*	—	Polyester	A, B, C, D, E, F, H, K, P, R, S, T, U, V, W, X, Y, AA — No Hardware Supplied	213806-3
34	Zinc, Nickel Plated	**.572** 14.53	**.347** 8.81	Yes	Polyester	Fully Loaded	213807-1
23	Zinc, Nickel Plated	**.572** 14.53	**.347** 8.81	Yes	Polyester	A, B, C, D, E, F, H, J, K, L, N, P, R, S, T, U, V, W, X, Y, AA, BB, NN	213807-2
23	Zinc, Nickel Plated	**.572** 14.53	**.347** 8.81	Yes	Polyester	A, B, C, D, E, F, H, J, L, N, P, R, S, T, U, V, W, X, Y, AA, HH, KK, NN	213807-3
17	Zinc, Nickel Plated	**.572** 14.53	**.347** 8.81	Yes	Polyester	A, B, C, D, E, F, H, P, R, S, T, U, V, W, X, Y, AA	213807-4

*The mounting bracket has an elongated slot for a 4-40 screw that will accommodate a .330 [8.38] or .347 [8.81] footprint.
Note: Other select loaded configurations can be made available; consult Tyco Electronics Corporation.

Products for Industrial & Commercial Applications
Dimensions are shown for reference purposes only.
Dimensions are in inches and millimeters unless otherwise specified. Values in brackets are metric equivalents.
Specifications subject to change.
Technical Support Center
1-800-522-6752
www.tycoelectronics.com

M Series V.35 Printed Circuit Board Connectors

Right-Angle Plug Assembly



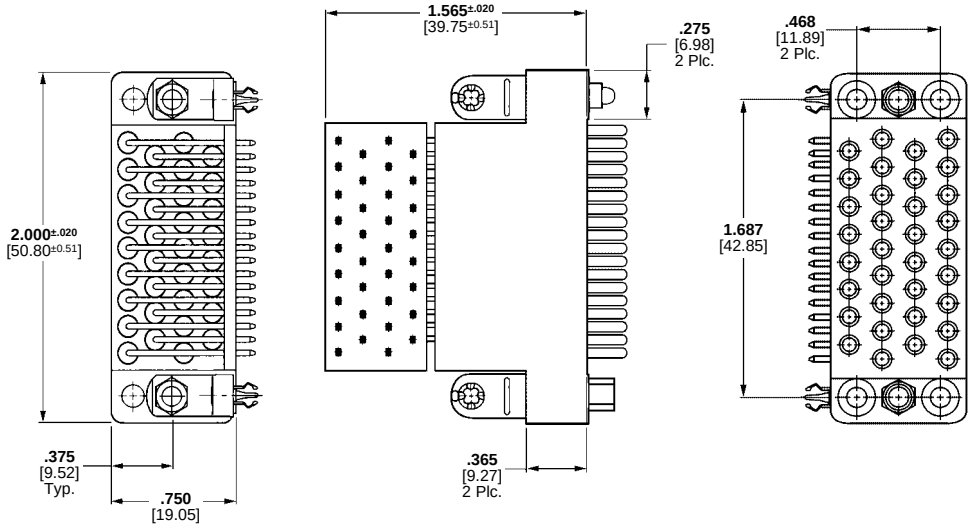

Material and Finish

Housing—Flame retardant phenolic or polyester, black

Contacts—Brass, plated:
a) .000030 [0.00076] gold min. in mating area, .000050 [0.00127] nickel min. underplating overall

Contact Spring—Stainless steel

Contact Post—Brass, tin-lead plated

Mounting Bracket—Brass, tin-nickel plated or zinc, nickel plated

Boardlocks—Copper alloy, tin-lead plated

Location Wafer—Phenolic

Nuts and Lockwashers—Steel, zinc plated

Jackscrews—Stainless steel

No. of Pos.	Mounting Bracket	Dimensions A	Dimensions B	Boardlocks	Housing Material	Select Load Pattern	Part Number
34	Brass, Tin Nickel Plated	**.555** 14.10	*	No	Phenolic	Fully Loaded	213289-1
34	Zinc, Nickel Plated	**.572** 14.53	**.347** 8.81	Yes	Phenolic	Fully Loaded	213513-2

*The mounting bracket has an elongated slot for a 4-40 screw that will accommodate a .330 [8.38] or .347 [8.81] footprint.
Note: Other select loaded configurations can be made available; consult Tyco Electronics Corporation.

No. of Pos.	Mounting Bracket	Dimensions A	Dimensions B	Boardlocks	Housing Material	Select Load Pattern	Part Number
34	Zinc, Nickel Plated	**.572** 14.53	**.347** 8.81	Yes	Polyester	Fully Loaded	213808-1
18	—	No Hardware Supplied			Polyester	A, B, C, D, E, F, H, K, P, R, S, T, U, V, W, X, Y, AA	213808-2

Note: Other select loaded configurations can be made available; consult Tyco Electronics Corporation.

For complete product information, order Catalog 82003

Products for Industrial & Commercial Applications
Dimensions are shown for reference purposes only.
Dimensions are in inches and millimeters unless otherwise specified. Values in brackets are metric equivalents.
Specifications subject to change.
Technical Support Center
1-800-522-6752
www.tycoelectronics.com

M Series V.35 Printed Circuit Board Connectors

Vertical Receptacle Assembly



Material and Finish

Housing—Flame retardant phenolic or polyester, black
Contacts—Brass, plated:
a) .000030 [0.00076] gold min. in mating area, .000050 [0.00127] nickel min. underplating overall
Contact Spring—Stainless steel
Contact Post—Brass, tin-lead plated
Nuts and Lockwashers—Steel, zinc plated
Spacers—Stainless steel
Jackscrews—Stainless steel

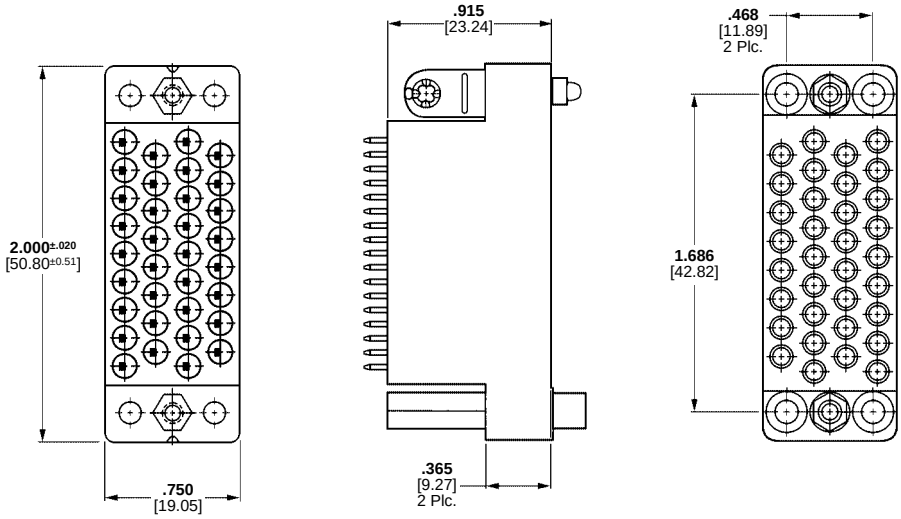

No. of Pos.	Mounting Hardware	Housing Material	Select Load Pattern	Part Number
34	None	Phenolic	Fully Loaded	213473-1
	Spacers	Phenolic	Fully Loaded	213524-1
		Polyester		213809-1
13	Nuts & Lockwashers	Phenolic	B, C, D, E, F, P, R, S, T, V, X, Y, AA	213524-2

Note: Other select loaded configurations can be made available; consult Tyco Electronics Corporation.

Vertical Plug Assembly



Material and Finish

Housing—Flame retardant phenolic, black
Contacts—Brass, plated:
a) .000030 [0.00076] gold min. in mating area, .000050 [0.00127] nickel min. underplating overall
Contact Spring—Stainless steel
Contact Post—Brass, tin-lead plated
Nuts and Lockwashers—Steel, zinc plated
Spacers—Stainless steel
Jackscrews—Stainless steel

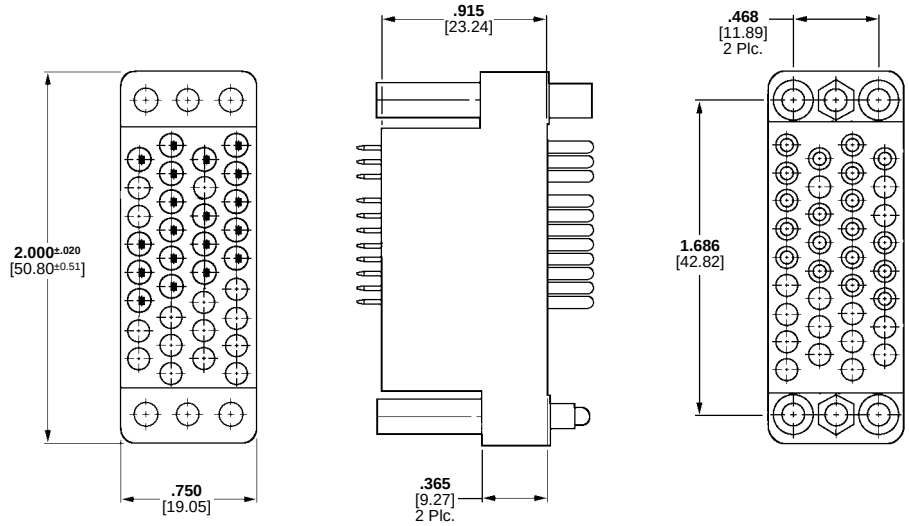

No. of Pos.	Mounting Hardware	Select Load Pattern	Part Number
19	Spacers*	A, B, C, D, E, F, K, L, N, P, R, S, T, U, V, W, X, Y, AA	213550-1
17	Nuts & Lockwashers	B, C, D, E, F, H, J, P, R, S, T, U, V, W, X, Y, AA	213550-2

*Jackscrews and spacers are provided unassembled.
Note: Other select loaded configurations can be made available, consult Tyco Electronics Corporation.

For complete product information, order Catalog 82003

M Series V.35 Cable Connectors

Cable Connector Kits, 34 Position, Phenolic



Plug



Receptacle

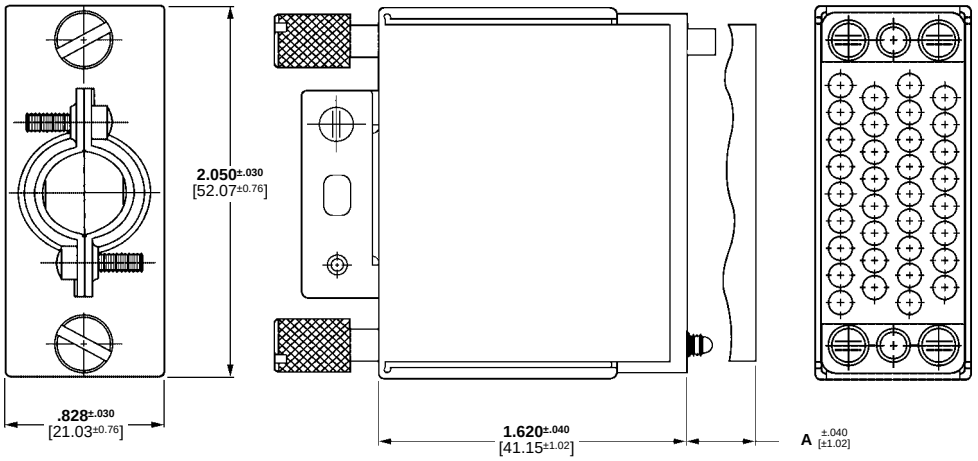

Material and Finish

Housing—Flame retardant phenolic, black

Shield—Anodized aluminum

Screws—Steel, zinc plated

Jackscrews—Stainless steel

Cable Clamp—Steel, nickel plated

Kits include:

- Housing
- One-piece shield
- One-piece turnable jackscrews
- Strain relief clamp
- Mounting screws

Notes:

1. Plug and receptacle connector kits come partially assembled.

2. Plug connector kits are available with long and short shields, (long shield provides pin protection) and two different size cable clamps.

3. Housings are keyed to fix the proper location of the male and female jackscrew as defined by 408-2593.

4. Short shield kits, **Part No. 213753-1** available with all accessories listed above except housing block and jackscrews. Part number for blocks are found on page 9195.

5. Pin and socket contacts sold separately. Size 16, Type III+ contacts are listed in Catalog 82003.

Shield Size	Cable Dia. Range	Housing Material	Dimension A	Kit Part Numbers	
				Receptacle	Plug
Short	**.435-.545** 11.05-13.83	Phenolic	**1.53** 38.86	—	213300-1
Short	**.300-.450** 7.62-11.43	Phenolic	**1.53** 38.86	—	213300-2
Long	**.435-.545** 11.05-13.83	Phenolic	**1.97** 50.04	—	213300-3
Long	**.300-.450** 7.62-11.43	Phenolic	**1.97** 50.04	—	213300-4
Short	**.435-.545** 11.05-13.83	Phenolic	**1.53** 38.86	213522-1	—
Short	**.300-.450** 7.62-11.43	Phenolic	**1.53** 38.86	213522-2	—
Short	**.200-.300** 5.08-7.62	Phenolic	**1.53** 38.86	213522-4	—
Short	**.200-.300** 5.08-7.62	Phenolic	**1.53** 38.86	—	213300-7

For complete product information, order Catalog 82003

Products for Industrial & Commercial Applications
Dimensions are shown for reference purposes only.
Dimensions are in inches and millimeters unless otherwise specified. Values in brackets are metric equivalents.
Specifications subject to change.
Technical Support Center
1-800-522-6752
www.tycoelectronics.com

M Series V.35 Cable Connectors

Cable Connector Kits, 34 Position, Polyester
(Continued)



Plug



Receptacle

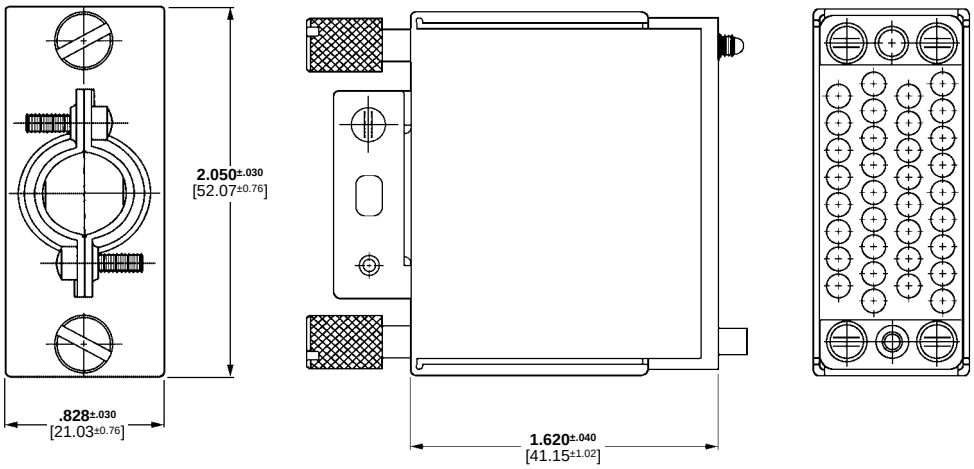

Material and Finish

Housing—Flame retardant polyester, black

Shield—Anodized aluminum

Screws—Steel, zinc plated

Jackscrews—Stainless steel or zinc, nickel plated

Cable Clamp—Steel, nickel plated

Kits include:

- Housing
- One-piece shield
- One-piece turnable jackscrews
- Strain relief clamp
- Mounting screws

Notes:

1. Plug and receptacle connector kits come partially assembled.

2. Two different size cable clamps.

3. Housings are keyed to fix the proper location of the male and female jackscrew as defined by 408-2593.

4. Pin and socket contacts sold separately. Size 16, Type III+ contacts are listed in Catalog 82003.

Packaging	Cable Dia. Range	Housing Material	Jackscrew Type	Kit Part Numbers	
				Receptacle	Plug
Bulk	**.435-.545** 11.05-13.83	Polyester	Stainless Steel	213931-1	—
Individual	**.300-.450** 7.62-11.43	Polyester	Stainless Steel	213931-2	—
Individual	**.435-.545** 11.05-13.83	Polyester	Zinc	213931-3	—
Individual	**.435-.545** 11.05-13.83	*	Zinc	213931-4	—
Individual	**.300-.450** 7.64-.11.43	Polyester	Zinc	213931-5	—
Bulk	**.435-.545** 11.05-13.83	Polyester	Stainless Steel	—	213932-1
Individual	**.300-.450** 7.62-11.43	Polyester	Stainless Steel	—	213932-2
Individual	**.435-.545** 11.05-13.83	Polyester	Zinc	—	213932-3
Individual	**.300-.450** 7.62-11.43	Polyester	Zinc	—	213932-4
Individual	**.300-.450** 7.62-11.43	Polyester	Zinc	—	213932-5**

*Housing not included in Kit No. 213931-4
**Long Shield, Assembled Length – 1.620±.040 [41.15±1.20]

For complete product information, order Catalog 82003

Products for Industrial & Commercial Applications
Dimensions are shown for reference purposes only.
Dimensions are in inches and millimeters unless otherwise specified. Values in brackets are metric equivalents.
Specifications subject to change.
Technical Support Center
1-800-522-6752
www.tycoelectronics.com

M Series V.35 Cable Connectors

Cable Connector Kits, 34 Position, Phenolic
(Continued)

Material and Finish

Housing—Flame retardant phenolic, black

Shield—Zinc, nickel plated

Screws—Steel, zinc plated

Jackscrews—Stainless steel or zinc, nickel plated

Cable Clamp—Steel, nickel plated

Kits include:

- Housing
- Two-piece shield
- One-piece turnable jackscrews
- Two cable clamp inserts
- Mounting screws

Notes:

1. Plug and receptacle connector kits come partially assembled.

2. Plug connector kits are available with or without pin hoods.

3. Housings are keyed to fix the proper location of the male and female jackscrew as defined by 408-2593.

4. Choice of stainless steel or zinc die cast one-piece jacksrews.

5. Pin and socket contacts sold separately. Size 16, Type III+ contacts are listed in Catalog 82003.

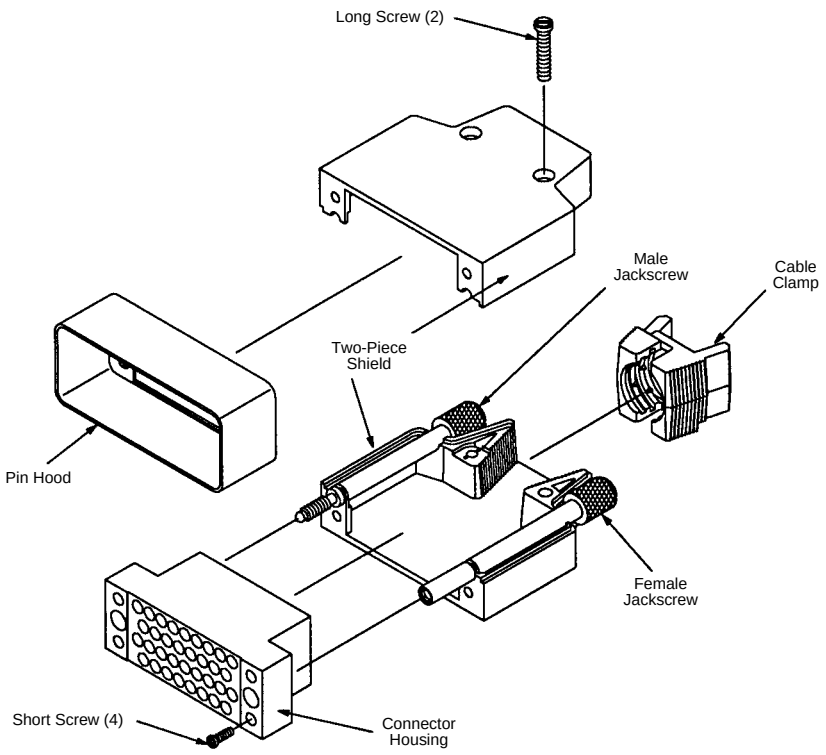

Pin Hood	Cable Dia. Range	Jackscrew Type	Kit Part Numbers	
			Receptacle	Plug
No	**.400-.600** 10.16-15.24	Zinc	—	213684-1
No	**.250-.400** 6.35-10.16	Zinc	—	213684-2
Yes	**.400-.600** 10.16-15.24	Zinc	—	213684-3
Yes	**.250-.400** 6.35-10.16	Zinc	—	213684-4
No	**.400-.600** 10.16-15.24	Stainless Steel	—	213684-7
No	**.400-.600** 10.16-15.24	Zinc	213685-1	—
No	**.250-.400** 6.35-10.16	Zinc	213685-2	—
No	**.400-.600** 10.16-15.24	Stainless Steel	213685-3	—
No	**.150-.300** 3.81-7.62	Zinc	213685-5	—
Yes	**.150-.300** 3.81-7.62	Zinc	—	213684-9
No	**.150-.300** 3.81-7.62	Zinc	—	1-213684-0

For complete product information, order Catalog 82003

Products for Industrial & Commercial Applications

Dimensions are shown for reference purposes only.

Dimensions are in inches and millimeters unless otherwise specified. Values in brackets are metric equivalents.

Specifications subject to change.

Technical Support Center
1-800-522-6752
www.tycoelectronics.com

M Series V.35 Cable Connectors

Cable Connector Kits, 34 Position, Polyester
(Continued)

Material and Finish

Housing—Flame retardant polyester, black
Shield—Zinc, nickel plated
Screws—Steel, zinc plated
Jackscrews—Zinc, nickel plated
Cable Clamp—Steel, nickel plated

Kits include:

- Housing
- Two-piece shield
- One-piece turnable jackscrews
- Two cable clamp inserts
- Mounting screws

Notes:

1. Plug and receptacle connector kits come partially assembled.

2. Plug connector kits are available with or without pin hoods.

3. Housings are keyed to fix the proper location of the male and female jackscrew as defined by 408-2593.

4. Pin and socket contacts sold separately. Size 16, Type III+ contacts are listed in Catalog 82003.

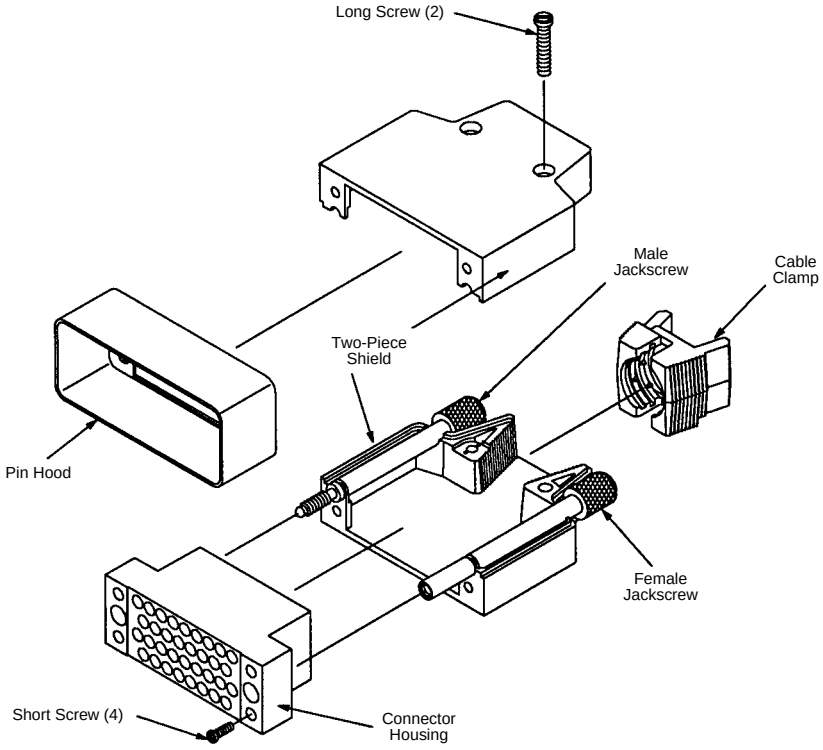

Pin Hood	Cable Dia. Range	Kit Part Numbers	
		Receptacle	Plug
No	**.150-.300** 3.81-7.62	—	213803-1
No	**.250-.400** 6.35-10.16	—	213803-2
Yes	**.150-.300** 3.81-7.62	—	213804-1
Yes	**.250-.400** 6.35-10.16	—	213804-2
No	**.150-.300** 3.81-7.62	213805-1	—
No	**.250-.400** 6.35-10.16	213805-2	—
No	**.400-.600** 10.16-15.24	—	213803-3
Yes	**.400-.600** 10.16-15.24	—	213804-3
No	**.400-.600** 10.16-15.24	213805-3	—

For complete product information, order Catalog 82003

Products for Industrial & Commercial Applications
Dimensions are shown for reference purposes only.
Dimensions are in inches and millimeters unless otherwise specified. Values in brackets are metric equivalents.
Specifications subject to change.
Technical Support Center
1-800-522-6752
www.tycoelectronics.com

Fastening Hardware

Jackscrews

Material and Finish

Turnable Jackscrew Body—Die cast zinc, chromate conversion coating

Turnable Jackscrew Tip—Stainless steel

Roll Pin—Stainless steel

For Fixed Jackscrews

Lockwasher—Steel

Hex Nut—Steel, zinc plated

Jackscrews are used as an aid in mating and unmating connectors and for holding mated connectors together, mostly larger sizes (34-position and up). They can also be used for polarization.

Turnable jackscrews are free to rotate in a connector housing and are always used opposite mating fixed jackscrews. Where provided, roll pins are used to hold a male or female tip onto the turnable jackscrew body. AMP Assembly Tool No. 91016-2 (shown below) is available for properly assembling the turnable jackscrews on a connector housing.

Fixed jackscrews can be readily assembled to a connector housing with the Nut Driver Tool (also shown below).



AMP Assembly Tool
Part Number 91016-2
(for Roll Pins)



Nut Driver
Part Number 811262-1 **(4-40)**

Turnable Jackscrews

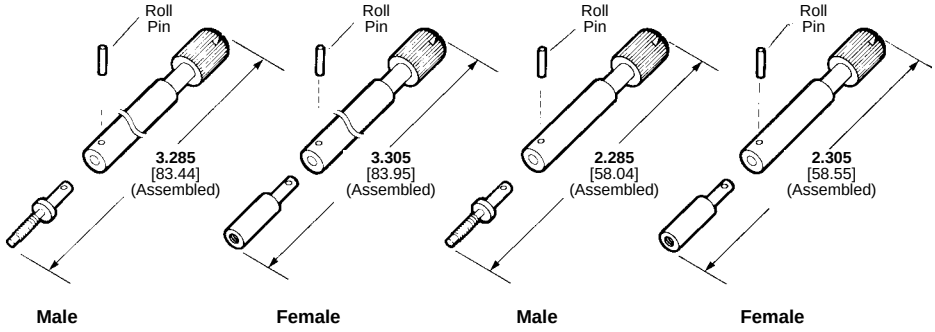

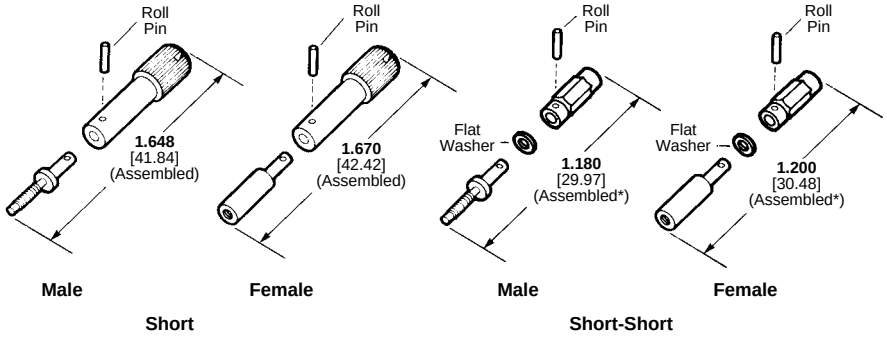

*Assembled dimension includes metal thickness of Pin Hood or Strain Relief Clamp. Remove washer when both Pin Hood and Strain Relief Clamp are used.

Turnable Jackscrews

Style	Jackscrew Part No.		Connectors Used on (No. of Positions)				
	6-32 [M3.5 x 0.6] Double Lead Thread	6-32 [M3.5 x 0.6] Single Lead Thread	Standard	Posted	Special Application		
					High Current	Mixed	High Voltage
Long-Long Male[1]	201911-1	207234-1	50 (90° shield only), 75 and 104	—	12	42	28
Long-Long Female[1]	201910-1	207235-1					
Long Male	200871-1	201413-1	20, 26, 34, 41, and 50	20, 26, 34, 41, and 50	12	15, 16 and 42	20 and 28
Long Female	200867-1	201414-1					
Short Male	200868-1	201087-1	6, 14, 20, 26, 34, 41, 50, 75 and 104	6, 14, 20, 26, 34, 41, 50, 75 and 104	12	15, 16 and 42	20 and 28
Short Female	200870-1	201088-1					
Short-Short Male	201388-1	201827-1	6, 14, 20, 26, 34, 41, 50, 75 and 104	6, 14, 20, 26, 34, 41, 50, 75 and 104	12	15, 16 and 42	20 and 28
Short-Short Female	201389-1	201828-1					

[1]Long-Long Turnable Jackscrews are used only with Two-Piece Shields on the connector sizes listed.

Notes: 1. Turnable Jackscrews mate with any Fixed Jackscrew listed below having the same thread size.
2. Special Turnable Jackscrews for use in connector housings to mate with Grounding Blocks are presented in Catalog 82003.
3. Single-lead versions are designed to mate with competitive Jackscrews.

Roll pins for turnable jackscrews, Long-Long, Long, Short **Part No. 201501-1,** Short-Short **Part No. 201501-2.**

For complete product information, order Catalog 82003

Products for Industrial & Commercial Applications
Dimensions are shown for reference purposes only.
Dimensions are in inches and millimeters unless otherwise specified. Values in brackets are metric equivalents.
Specifications subject to change.
Technical Support Center
1-800-522-6752
www.tycoelectronics.com

Fastening Hardware

Fixed Jackscrews

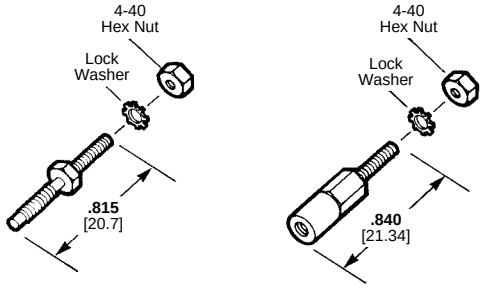

Male **Female**

Fixed Jackscrews

Type	Jackscrew Part No.	
	6-32 [M3.5 x 0.6] Double Lead Thread	6-32 [M3.5 x 0.6] Single Lead Thread
Male	200874-1	201092-1
Female	200875-1	201089-1

Notes: 1. Fixed Jackscrews mate with any Turnable Jackscrew listed above having the same thread size.
2. Single-lead versions are designed to mate with competitive Jackscrews.
3. Double-Lead Thread and Single-Lead Thread Jackscrews can NOT be mixed; i.e., Double-Lead must mate with Double, Single-Lead with Single.
4. Double-Lead Thread has two leads in the same revolution versus one lead for Single-Lead Thread. Therefore, Double-Lead Thread will pick up twice as fast.

Keying Hardware

Keying Plug (for Multimate Contact Cavities)

Material

Natural color nylon

This cylindrical keying plug is used in Multimate contact cavities that accept Type II, Type III+ and Subminiature COAXICON socket contacts. The plug protrudes from the mating face of a connector and will prevent connector halves from being mated by butting against the pin contact. The mating pin contact must be removed to provide for proper mating.

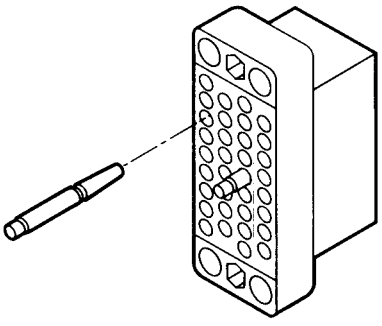

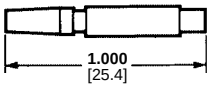

Part No. 200821-1

For complete product information, order Catalog 82003

Fastening Hardware

Locking Springs

Material and Finish

Male (Spring Member)—Spring steel, nickel plated

Female (Latching Member)—Stainless steel

Locking Springs are used to hold mated connectors together. Although Locking Springs can be used on connectors up to 50 positions, they are primarily used on smaller size connectors (less than 34 positions).

In all applications, a Male (Spring Member) is used opposite a Female (Latching Member). They can be secured to a connector housing using Guide Pins and Sockets or 4-40 x .250 [6.35] fillister head screws and nuts. Locking Springs can be used with all hardware, except Closed-End Pin Hoods.

For Housings with Single Mounting Hole

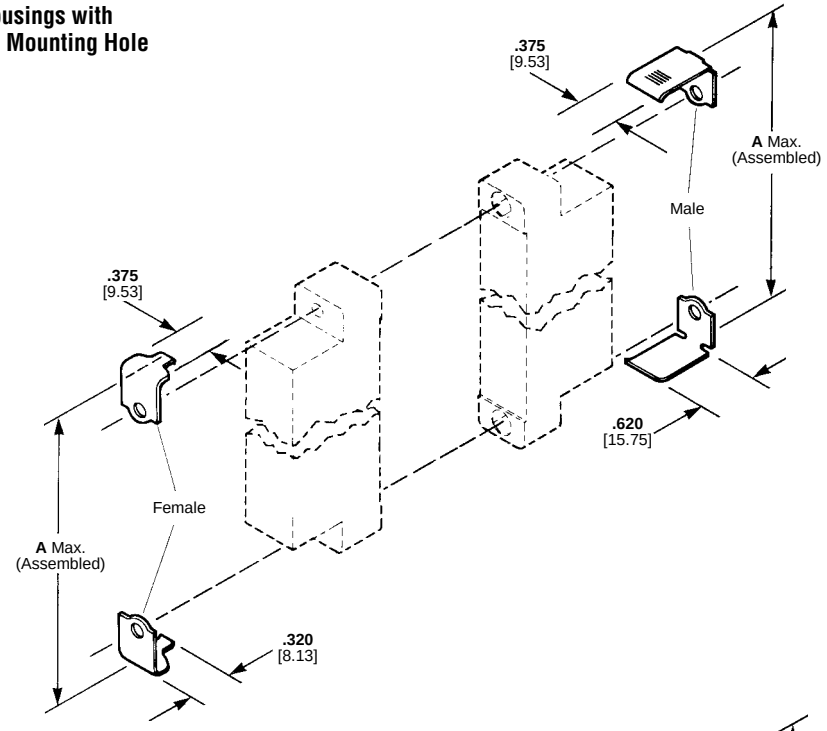

For Housings with Three Mounting Holes

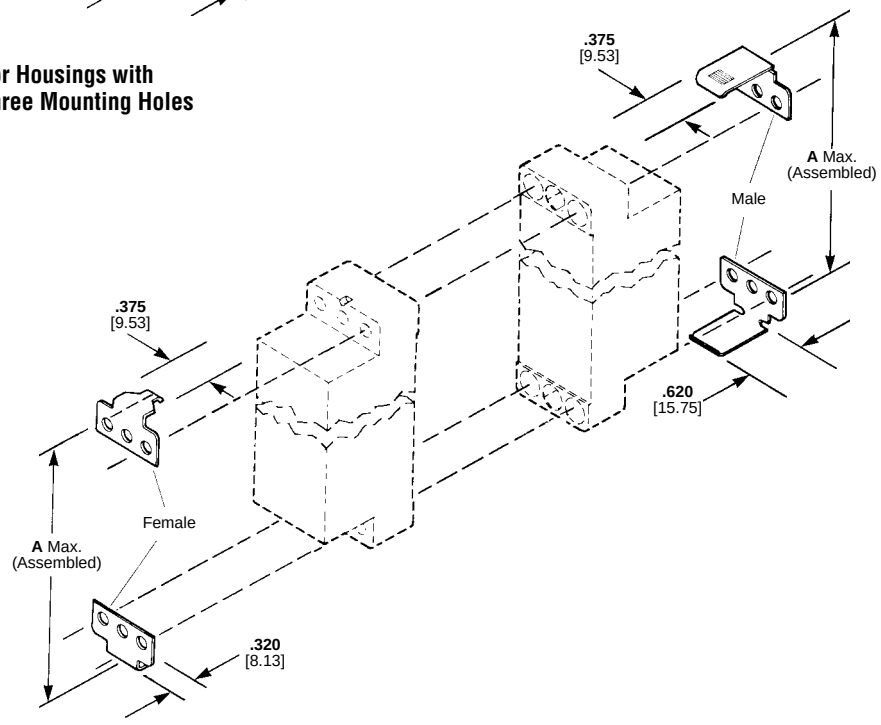

Standard Connector Size*	A Max.
6	**1.413** 35.89
14	**1.662** 42.21
20	**1.975** 50.17
26	**2.037** 51.74
34	**2.412** 61.26
41	**3.047** 77.39
50	**3.006** 76.35

*A dimension also applies to other comparably sized connector types listed in the chart at the right.

Locking Spring Part No.		Connectors Used On (No. of Positions)				
				Special Application		
Male (Spring Member)	Female (Latching Member)	Standard	Posted	High Current	Mixed	High Voltage
201921-1	201922-1	6, 14, 20 and 41	6, 14, 20 and 41	—	—	—
201923-1	201918-1*	26	26	—	15	—
201925-1	201926-1	34 and 50	34 and 50	—	16 and 42	20

*Single female latch, two must be ordered per assembly.

Products for Industrial & Commercial Applications

Dimensions are shown for reference purposes only.

Dimensions are in inches and millimeters unless otherwise specified. Values in brackets are metric equivalents.

Specifications subject to change.

Technical Support Center
1-800-522-6752
www.tycoelectronics.com

Guiding Hardware

Guide Pins and Sockets

Material and Finish

Guide Pins and Sockets—Stainless steel
Lockwashers—Stainless steel
Hex Nuts—Steel, zinc plated

Guiding hardware is used to align connector halves during mating. This hardware can also be used for keying connectors to provide for proper mating. Guiding hardware can be readily secured to connector housings using the Nut Driver Tool shown below.

Center Guide Pins and Sockets are used primarily in housings having a single mounting hole, but can also be used in the centermost hole of housings having 3 or 4 mounting holes.

Corner Guide Pins and Sockets are used in the corner holes of housings having 2, 3 or 4 mounting holes. They cannot be used in center mounting holes which are slightly deeper than corner mounting holes to accept Jackscrews.

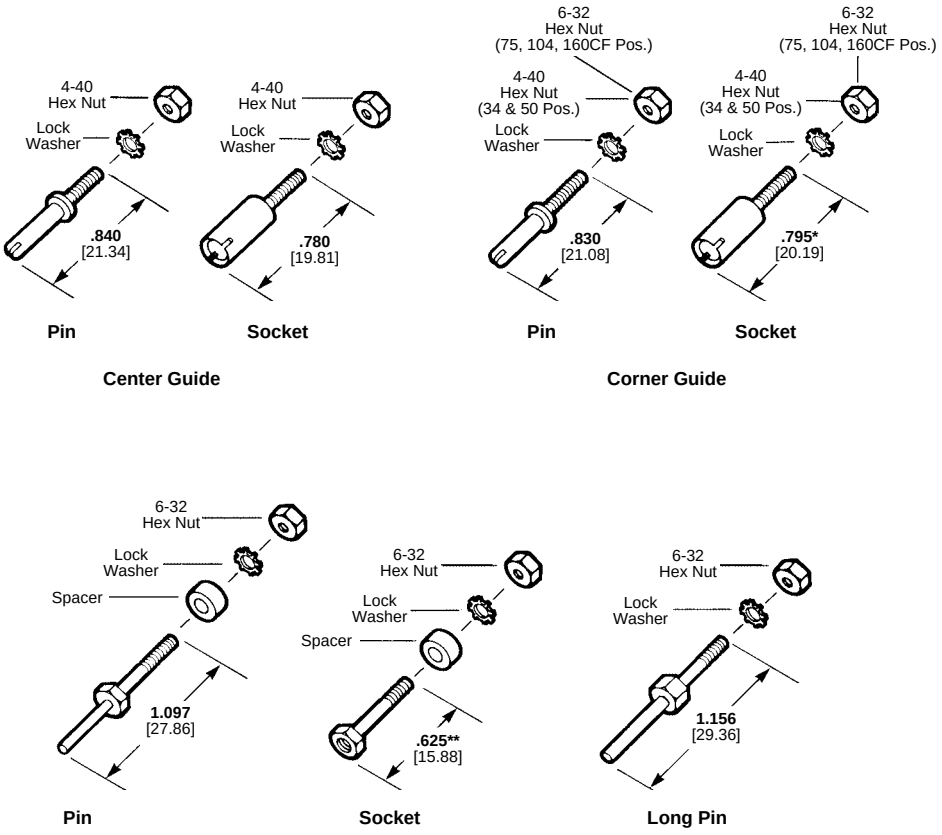

Guide Pins and Sockets		Connectors Used On (No. of Positions)				
				Special Application		
Type	Part No.	Standard	Posted	High Current	Mixed	High Voltage
Center Pin	200389-2	6, 14, 20, 26, 34, 41, 50, 75 and 104	6, 14, 20, 26, 34, 41, 50, 75 and 104	12	15, 16 and 42	20 and 28
Center Socket	200390-2					
	207619-1*[2]					
Corner Pin	200833-2	34 and 50	34 and 50	—	16 and 42	20
Corner Socket	200835-2					
	203964-1*					
Corner Pin	201046-2	75, 104 and 160 CF	75, 104 and 160 CF	12	29	28
Corner Socket	201047-2					
	203966-1*					
Corner Pin	202173-5	104 CF	104 CF	—	—	—
	202173-1[3]					
Corner Socket	202174-1					
	202174-4[3]					
	204099-2**					
Long Pin[1]	201540-1					

[1] Two Long Pins are to be installed in diagonal corners. Use without Guide Sockets.
[2] Hex Nut Stainless Steel.
[3] Without Spacer.
*These Corner or Center Guide Sockets (.880 [22.35] long) are to be used when housings are loaded with Subminiature COAXICON contacts.
Corner Socket, **Part No. 204099-2 (.838 [21.29] long), is to be used when housings are loaded with Subminiature COAXICON contacts.

For complete product information, order Catalog 82003



Nut Driver
Part Number 811262-1 **(4-40)**
Part Number 811262-2 **(6-32)**

Protective Hardware

Pin Hoods, Internal Open-End and Closed-End

Material and Finish

See charts

Pin Hoods are used to protect pin contacts that protrude from a connector housing.

When contacts are mixed (pins and sockets in both housings), an Internal Pin Hood is used on one housing and an External Pin Hood (page 9215) is used on the other housing. Or a Long Shield is used on one housing and an External Pin Hood must be used on the other housing. When a housing is loaded with all pin contacts, an Internal or External Pin Hood may be used—no Pin Hood is required on the mating half.

External Open-End Pin Hoods with flanges (page 9215) are used primarily for mounting a connector with pin contacts to a panel.

All Pin Hoods may be secured to connector housings using other appropriate hardware, such as Jackscrews and Guide Pins and Sockets.

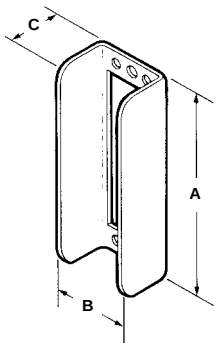

Internal Open-End

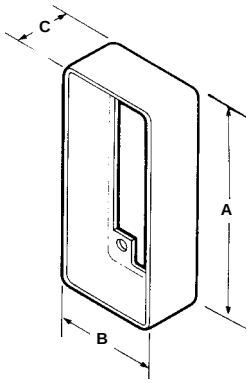

Internal Closed-End

Note: Typical Internal Open-End and Closed-End Pin Hoods are illustrated. Slight differences in configuration exist for various sizes. The mounting holes and/or slots in each Pin Hood match the mounting hole pattern of the connector housing on which the Pin Hood is used.

Pin Hoods, Internal Open-End

Dimensions			Material	Pin Hood Part No.	Connectors Used On (No. of Positions)				
							Special Application		
A	B	C			Standard	Posted	High Current	Mixed	High Voltage
1.000 25.4	**.500** 12.7	**.718** 18.24	Nickel Plated Steel	204258-6	6	6	—	—	—
1.250 31.75	**.550** 13.97	**.718** 18.24	Nickel Plated Steel	201363-4	14	14	—	—	—
1.632 41.45	**.725** 18.42	**.718** 18.24	Nickel Plated Steel	201785-4	26	26	—	15	—
2.000 50.8	**.880** 22.35	**.718** 18.24	Nickel Plated Steel	201786-4	34	34	—	16	20

Pin Hoods, Internal Closed-End

Dimensions			Material	Pin Hood Part No.	Connectors Used On (No. of Positions)				
							Special Application		
A	B	C			Standard	Posted	High Current	Mixed	High Voltage
2.130 54.1	**.880** 22.35	**.687** 17.45	Nickel Plated Steel	202434-4	34	34	—	16	20
2.875 73.02	**.952** 24.18	**.687** 17.45	Nickel Plated Steel	202394-2	50	50	—	42	—
2.765 70.23	**1.310** 33.27	**.687** 17.45	Nickel Plated Steel	201369-4	75	75	12	—	28
2.975 75.57	**1.740** 44.2	**.687** 17.45	Nickel Plated Steel	201364-4	104	104	—	—	—
2.975 75.57	**2.040** 51.82	**.687** 17.45	Nickel Plated Steel	203743-4	160 CF	160 CF	—	—	—

For complete product information, order Catalog 82003

Products for Industrial & Commercial Applications

Dimensions are shown for reference purposes only.

Dimensions are in inches and millimeters unless otherwise specified. Values in brackets are metric equivalents.

Specifications subject to change.

Technical Support Center
1-800-522-6752
www.tycoelectronics.com

Protective Hardware

Pin Hoods, External Closed-End and Open-End (with Flanges)

Material and Finish

See charts

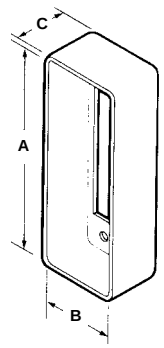

External Closed-End

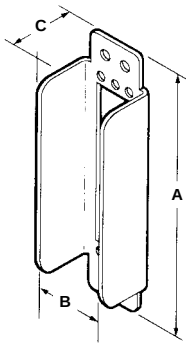

External Open-End with Flanges

Note: Typical External Closed-End and Open-End (with Flanges) Pin Hoods are illustrated. Slight differences in configuration exist for various sizes. The mounting holes and/or slots in each Pin Hood match the mounting hole pattern of the connector housing on which the Pin Hood is used.

Pin Hoods, External Closed-End

Dimensions A	Dimensions B	Dimensions C	Material	Pin Hood Part No.	Connectors Used On (No. of Positions) Standard	Posted	Special Application High Current	Mixed	High Voltage
1.880 47.75	**.812** 20.62	**.687** 17.45	Aluminum Iridite	201349-2	26	26	—	15	—
2.250 57.15	**1.000** 25.4	**.687** 17.45	Aluminum Iridite	201350-2	34	34	—	16	20
2.845 72.26	**1.000** 25.4	**.687** 17.45	Nickel Plated Steel	201390-5	50	50	—	42	—
2.845 72.26	**1.360** 34.54	**.687** 17.45	Nickel Plated Steel	201368-4	75	75	12	29	28
3.025 76.84	**1.800** 45.72	**.687** 17.45	Nickel Plated Steel	201346-4	104	104	—	—	—
3.040 77.22	**1.340** 34.04	**.718** 18.24	Nickel Plated Steel	202119-2	104 CF	104 CF	—	—	—
3.025 76.84	**2.100** 53.34	**.687** 17.45	Nickel Plated Steel	203744-4	160 CF	160 CF	—	—	—

Pin Hoods, External Open-End with Flanges

Dimensions A	Dimensions B	Dimensions C	Material	Pin Hood Part No.	Connectors Used On (No. of Positions) Standard	Posted	Special Application High Current	Mixed	High Voltage
2.875 73.02	**.891** 22.63	**.687** 17.45	Nickel Plated Steel	202095-5	34	34	—	16	20
3.375 85.73	**.565** 14.35	**.687** 17.45	Nickel Plated Steel	202165-5	41	41	—	—	—
3.468 88.09	**.891** 22.63	**.687** 17.45	Nickel Plated Steel	202096-5	50	50	—	42	—

For complete product information, order Catalog 82003

Products for Industrial & Commercial Applications
Dimensions are shown for reference purposes only.
Dimensions are in inches and millimeters unless otherwise specified. Values in brackets are metric equivalents.
Specifications subject to change.
Technical Support Center 1-800-522-6752
www.tycoelectronics.com

Protective Hardware

Shields, Two-Piece, 180° and 90° Cable Exit

Material and Finish

Shields—See charts
Cable Clamp—Steel, nickel plated
Screws—Steel, zinc plated

These Two-Piece Shields are used to protect connectors from dust, dirt and physical damage and to provide strain relief for the contacts. They feature integral cable clamps formed at 180° and 90° and are available in long and short versions. Long versions offer pin protection as well as connector protection and strain relief. Short versions may be used in combination with Pin Hoods to provide pin protection.

For shielding and fastening applications, Two-Piece Shields are used with Jackscrews. They may be secured to a connector housing using other appropriate hardware such as Guide Pins and Sockets.

Two-Piece Shields with cable clamps formed at 45° are available, see page 9219.

Tyco Electronics does **NOT** recommend the use of shields with posted connectors because of the potential of shorting.

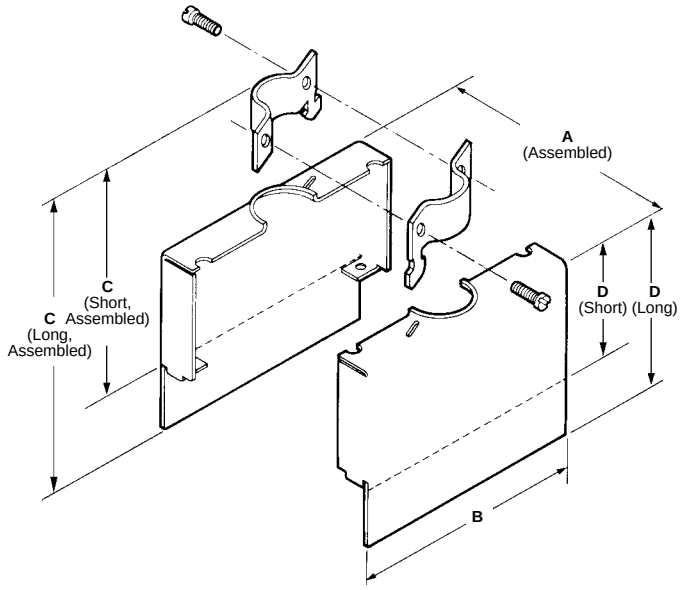

180° Cable Exit

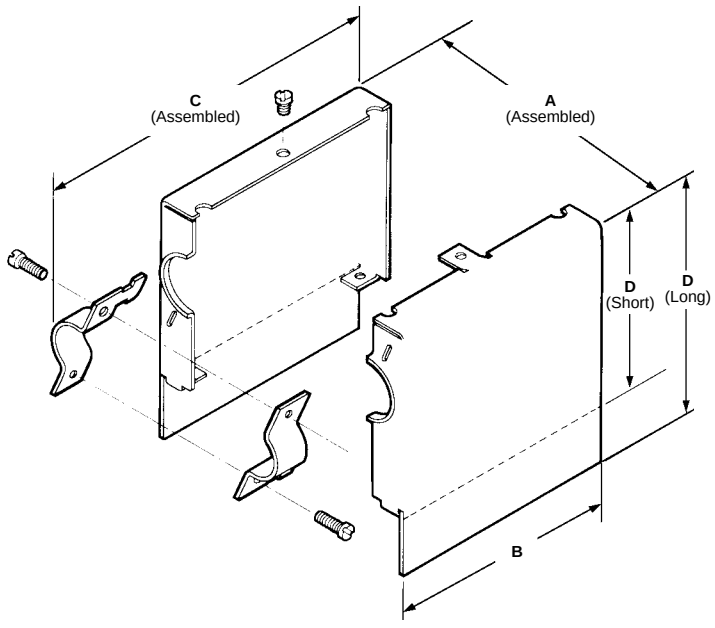

90° Cable Exit

Note: Typical 180° and 90° Cable Exit Shields are illustrated. Slight differences in configuration exist for various sizes.

For complete product information, order Catalog 82003

Products for Industrial & Commercial Applications

Dimensions are shown for reference purposes only.

Dimensions are in inches and millimeters unless otherwise specified. Values in brackets are metric equivalents.

Specifications subject to change.

Technical Support Center
1-800-522-6752
www.tycoelectronics.com

Protective Hardware

Two-Piece Shields, 180° Cable Exit (Long and Short)

Dimensions A	Dimensions B	Dimensions C	Dimensions D	Material	Shield Part No. Long	Shield Part No. Short	Max. Cable Dia.	Connectors Used On (No. of Positions) Standard	Special Application High Current	Special Application Mixed	Special Application High Voltage
.520 13.21	**1.562** 39.67	**1.815** 46.10	**1.300** 33.02	Nickel Plated Steel	—	204087-1	**.375** 9.53	20	—	—	—
.640 16.26	**1.625** 41.28	**2.453** 62.31	**1.970** 50.04	Anodized Aluminum	201576-1	—	**.415** 10.54	26	—	15	—
				Nickel Plated Steel	201576-2	—					
		1.781 45.24	**1.300** 33.02	Nickel Plated Steel	—	200514-2					
.828 21.03	**2.000** 50.8	**2.453** 62.31	**1.937** 49.2	Anodized Aluminum	201571-1	—	**.500** 12.7	34	—	16	20
				Nickel Plated Steel	201571-2	—					
		1.765 44.83	**1.250** 31.75	Anodized Aluminum	—	200517-1					
				Nickel Plated Steel	—	200517-2					
.515 13.08	**2.687** 68.25	**2.453** 62.31	**1.968** 49.99	Nickel Plated Steel	202383-2	—	**.435** 11.05	41	—	—	—
.515 13.08	**2.687** 68.25	**1.781** 45.24	**1.290** 32.77		—	202383-1					
.828 21.03	**2.593** 65.86	**2.468** 62.69	**1.970** 50.04	Anodized Aluminum	201443-1	—	**.550** 13.97	50	—	42	—
				Nickel Plated Steel	201443-2	—					
		1.796 45.62	**1.290** 32.77	Anodized Aluminum	—	200532-1					
				Nickel Plated Steel	—	200532-2					
1.195 30.35	**2.727** 69.27	**3.327** 84.51	**2.797** 71.04	Nickel Plated Steel	202713-2	—	**1.000** 25.4	75	12	—	28
		2.655 67.44	**2.125** 53.98		—	202713-1					
1.620 41.15	**2.835** 72.01	**3.327** 84.51	**2.797** 71.04	Nickel Plated Steel	204173-2	—	**1.100** 27.94	104	—	—	—
		2.655 67.44	**2.125** 53.98		—	204173-1					
1.703 43.26	**2.765** 70.23	**1.843** 46.81	**1.290** 32.77	Nickel Plated Cast Aluminum	—	201131-1	**.800** 20.32				

Two-Piece Shields, 90° Cable Exit (Long and Short)

Dimensions A	Dimensions B	Dimensions C	Dimensions D	Shield Part No. Long	Shield Part No. Short	Max. Cable Dia.	Connectors Used On (No. of Positions) Standard	Special Application High Current	Special Application Mixed	Special Application High Voltage
.900 22.86	**2.592** 65.84	**3.098** 78.69	**2.797** 71.04	203975-2	—	**.550** 13.97	50	—	42	—
			2.125 53.98	—	203975-1					
1.195 30.35	**2.730** 69.34	**3.260** 82.80	**2.797** 71.04	202711-3	—	**1.000** 25.4	75	12	—	28
			2.125 53.98	—	202711-1					
1.145 29.08	**2.845** 72.26	**3.375** 85.73	**2.375** 60.33	—	202395-1	**1.000** 25.4	104 CF	—	—	—

Notes: 1. All parts are packaged unassembled.
2. Material: nickel plated steel.

For complete product information, order Catalog 82003

Protective Hardware

Shields, One-Piece, 180° and 90° Cable Exit

Material and Finish

Shields and Cable Clamps—Steel, nickel plated

Screws—Steel, zinc plated

One-Piece Shields are used to protect connectors from dust, dirt and physical damage and to provide strain relief for the contacts. They feature integral cable clamps formed at 180° and 90° and are available in long and short versions. Long versions offer pin protection as well as connector protection and strain relief. Short versions may be used in combination with Pin Hoods to provide pin protection.

For shielding and fastening applications, One-Piece Shields are used with Locking Springs. They cannot be used with Jackscrews. One-Piece Shields may be secured to a connector housing using other appropriate hardware such as Guide Pins and Sockets.

Tyco Electronics does **NOT** recommend the use of shields with posted connectors because of the potential of shorting.

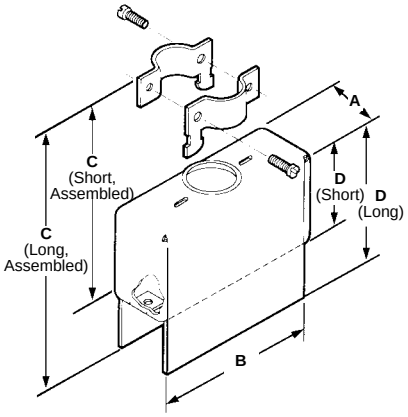

180° Cable Exit

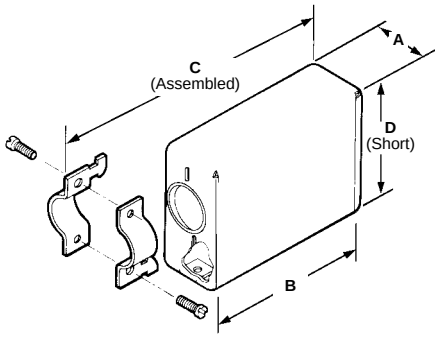

90° Cable Exit

Note: Typical 180° and 90° Cable Exit Shields are illustrated. Slight differences in configuration exist for various sizes.

One-Piece Shields, 180° Cable Exit (Long and Short)

Dimensions				Shield Part No.		Max. Cable Dia.	Connectors Used On (No. of Positions)		
								Special Application	
A	B	C	D	Long	Short		Standard	Mixed	High Voltage
.531 13.49	**1.312** 33.32	**2.468** 62.69	**1.969** 50.01	201378-2	—	**.375** 9.53	14	—	—
		1.796 45.62	**1.300** 33.02	—	201360-2				
.515 13.08	**1.640** 41.66	**1.796** 45.62	**1.300** 33.02	—	201227-2	**.350** 8.89	20	—	—
.640 16.26	**1.687** 42.85	**1.796** 45.62	**1.296** 32.92	—	201169-2	**.400** 10.16	26	15	—
.828 21.03	**2.062** 52.37	**2.468** 62.69	**1.969** 50.01	201384-2	—	**.500** 12.7	34	16	20
		1.781 45.24	**1.281** 32.54	—	201165-2				

One-Piece Shields, 90° Cable Exit (Short)

Dimensions				Shield Part No.	Max. Cable Dia.	Connectors Used On (No. of Positions)		
							Special Application	
A	B	C	D	Short		Standard	Mixed	High Voltage
.531 13.49	**1.312** 33.32	**1.796** 45.62	**1.750** 44.45	201467-2	**.375** 9.53	14	—	—
.828 21.03	**2.062** 52.37	**2.562** 65.07	**1.812** 46.02	201469-2	**.500** 12.7	34	16	20

Note: All parts are packaged unassembled.

For complete product information, order Catalog 82003

Products for Industrial & Commercial Applications

Dimensions are shown for reference purposes only.

Dimensions are in inches and millimeters unless otherwise specified. Values in brackets are metric equivalents.

Specifications subject to change.

Technical Support Center
1-800-522-6752
www.tycoelectronics.com

Protective Hardware

Shields, Two-Piece, 45° and 30° Cable Exit

Material and Finish

Shields and Cable Clamps—Steel, nickel plated
Screws—Steel, zinc plated

These Two-Piece Shields are used to protect connectors from dust, dirt and physical damage and to provide strain relief for the contacts. They feature integral cable clamps formed at 45° and are specifically designed for use with 104 CF and 160 CF position standard connectors; 30° exit shield is available for 29 CF position connectors.

These Shields may be used with Pin Hoods to provide pin protection.

These Two-Piece Shields may be secured to a connector housing using other appropriate hardware such as Guide Pins and Sockets.

Tyco Electronics does **NOT** recommend the use of shields with posted connectors because of the potential of shorting.

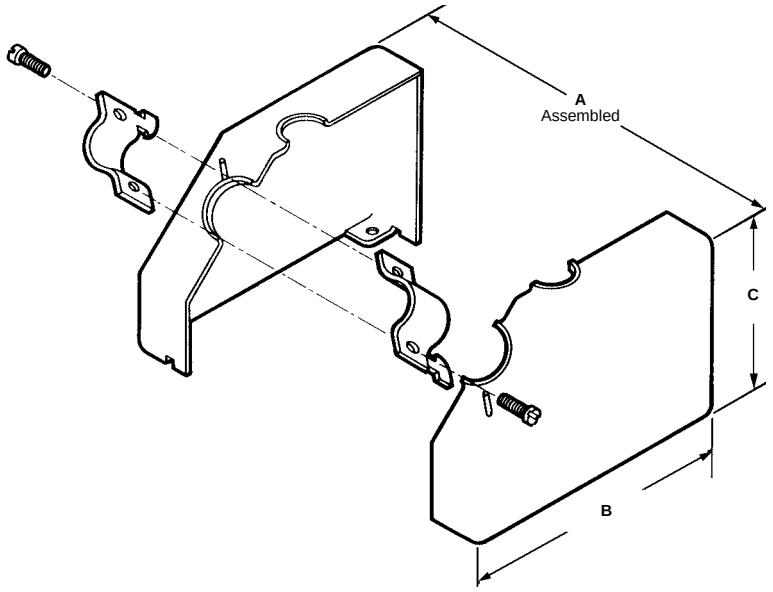

45° Cable Exit

Note: A typical 45° Cable Exit Shield is illustrated. Slight differences in configuration exist between sizes.

Two-Piece Shields, 45° Cable Exit

Dimensions A	Dimensions B	Dimensions C	Shield Part No.	Max. Cable Dia.	Connectors Used On (No. of Positions) Standard
1.145 29.08	**2.845** 72.26	**2.375** 60.33	202169-1	**1.000** 25.4	104 CF
		1.875 47.63	202110-1	**.650** 16.51	
1.845 46.86	**2.770** 70.36	**2.750** 69.85	202798-1	**1.200** 30.48	160 CF

Note: All parts are packaged unassembled.

Two-Piece Shield, 30° Cable Exit

Dimensions A	Dimensions B	Dimensions C	Shield Part No.	Max. Cable Dia.	Connectors Used On (No. of Positions) Standard
1.375 34.93	**2.685** 68.19	**3.440** 87.38	202483-1	**1.250** 31.75	29 CF

For complete product information, order Catalog 82003

Products for Industrial & Commercial Applications
Dimensions are shown for reference purposes only.
Dimensions are in inches and millimeters unless otherwise specified. Values in brackets are metric equivalents.
Specifications subject to change.
Technical Support Center
1-800-522-6752
www.tycoelectronics.com

Strain Relief Hardware

Strain Relief Clamps

Material and Finish

Clamp—Steel, nickel plated
Hex Nuts—Steel, zinc plated
"U" Bolt—Stainless steel
Sleeves—Black plastic (neoprene)
Bracket—See chart

Strain Relief Clamps are used to relieve the stress of the wires on the contacts and to group the wires where they enter a connector. Both long and short versions are available. The long versions are normally used for all applications and provide a greater distance between the wire bundle and the connector for operating Jackscrews without interference. The short versions are ideally suited for applications where space is limited.

Tyco Electronics does **NOT** recommend the use of Strain Relief Clamps with posted connectors because of the potential of shorting.

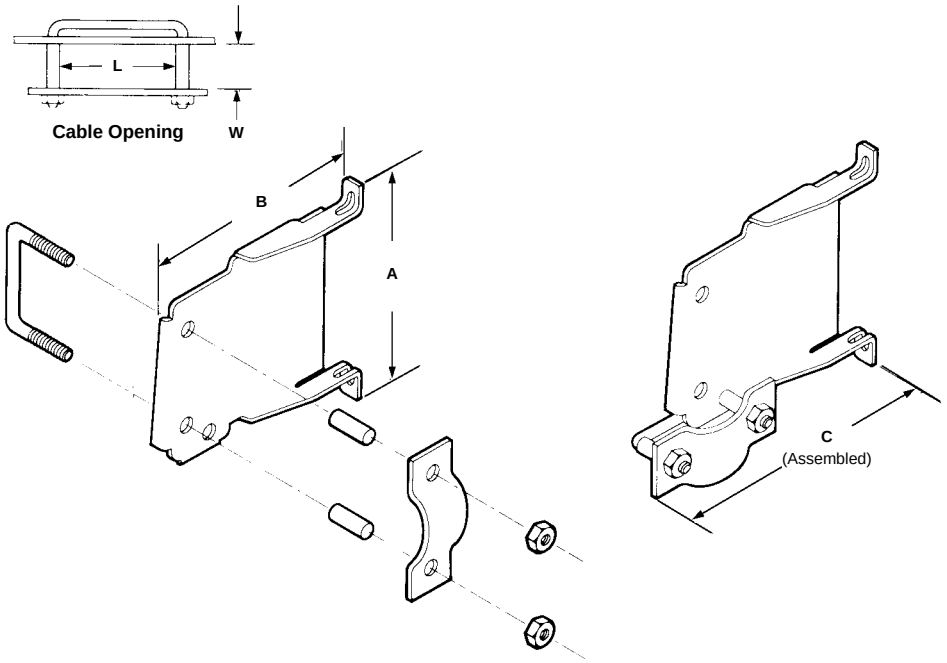

Shown for 180° Cable Exit

Shown for 90° Cable Exit

Note: A typical Strain Relief Clamp is illustrated. Slight differences in configuration exist for various sizes.

Cable Clamps (Long and Short)

Bracket Material	Dimensions A	Dimensions B	Dimensions C	Cable Opening L x W	Strain Relief Clamp Part No. Long	Strain Relief Clamp Part No. Short	Connectors Used On (No. of Positions) Standard	Special Application High Current	Special Application Mixed	Special Application High Voltage
Steel, Nickel Plated	**1.000** 25.4	**1.125** 25.58	—	**.305 x .155** 7.75 x 3.94	—	203432-1	6	—	—	—
	1.250 31.75	**2.125** 53.98	**2.687** 68.25	**.530 x .335** 13.46 x 8.51	201843-1	—	14	—	—	—
		1.125 28.58	**1.687** 42.85		—	200686-1				
Stainless Steel	**1.562** 39.67	**1.187** 30.15	**2.000** 50.8	**.780 x .335** 19.81 x 8.51	—	201237-1	20	—	—	—
Steel, Nickel Plated	**1.625** 41.28	**2.125** 53.98	**2.937** 74.6	**.780 x .505** 19.81 x 12.83	201845-1	—	26	—	15	—
		1.250 31.75	**2.062** 52.37	**.780 x .430** 19.81 x 10.92	—	201229-1				
	2.000 50.8	**2.281** 57.94	**2.851** 72.42	**.780 x .500** 19.81 x 12.7	201846-1	—	34	—	16	20
		1.500 38.1	**2.265** 57.33	**.780 x .425** 19.81 x 10.8	—	201224-1				
Stainless Steel	**2.625** 66.68	**2.000** 50.8	**3.343** 84.91	**1.500 x .360** 38.1 x 9.14	201766-1	—	41	—	—	—
	2.593 65.86	**2.406** 61.11	**3.296** 83.72	**1.125 x .675** 28.58 x 17.15	201847-1	—	50	—	42	—
Steel, Nickel Plated	**2.562** 65.07	**1.703** 43.26	**2.780** 70.61	**1.125 x .550** 28.58 x 13.97	—	201182-1				
Stainless Steel	**2.594** 65.89	**2.531** 64.29	**3.717** 94.41	**1.125 x .925** 28.58 x 23.5	201848-1	—	75	12	—	28
Steel, Nickel Plated	**2.625** 66.68	**1.734** 44.04	**2.874** 73.0	**1.125 x .800** 28.58 x 20.32	—	200730-1				
	2.750 69.85	**2.531** 64.29	**3.389** 86.08	**1.125 x 1.235** 28.58 x 31.37	201849-1	—	104	—	—	—

Notes: All parts are packaged unassembled.

For complete product information, order Catalog 82003

Products for Industrial & Commercial Applications
Dimensions are shown for reference purposes only.
Dimensions are in inches and millimeters unless otherwise specified. Values in brackets are metric equivalents.
Specifications subject to change.
Technical Support Center
1-800-522-6752
www.tycoelectronics.com

Technical Documents

The following is a list of technical documents that provide specifications, application and performance data for M Series connectors, contacts, tooling and hardware.

Product Specifications describe technical performance characteristics and verification tests. They are intended for the Design, Component and Quality Engineer.

108-10001 M Series Connectors
108-10024 CPC Connectors
108-10037 Contacts, Type XII
108-10039 Type II Contacts
108-10040 Metal-Shell CPC Connectors
108-10042 Type III+ Contacts
108-10108 Type I Contacts
108-12011 Subminiature COAXICON Contacts
108-12021 Miniature COAXICON Contacts

Application Specifications describe requirements for using the product in its intended application and/or crimping information. They are intended for the Packaging and Design Engineer and the Machine Setup Person.

114-10000 Contacts, Size 20 DF
114-10004 Type III+ Contacts, Application of
114-10005 Type XII Contacts, Application of
114-10026 Type II Contacts
114-10038 CPC Connectors

Instruction Sheets provide instructions for assembling or applying the product. They are intended for the Manufacturing Assembler or Operator.

408-1379 Selection Charts for Multimate Pin and Socket Contacts
408-7053 Selection Chart for Type I Pin and Socket Contacts
408-1770 Selection Chart for Miniature COAXICON Contacts
408-7170 6, 14, 20 and 41 Position M Series Connectors
408-7177 21 and 26 Position M Series Connectors
408-7161 34 and 50 Position and 20 Position (High Voltage) M Series Connectors
408-7164 75 and 104 Position M Series Connectors
408-7005 104 CF Position M Series Connectors
408-7293 160 CF Position M Series Connectors
408-7105 14, 20, 26 and 41 Position M Series Connector Kits
408-7107 34 and 50 Position M Series Connector Kits
408-7730 34, 50, 75 and 104 Position M Series Connector Kits
408-7108 75 and 104 Position M Series Connector Kits
408-7048 15 Position (Mixed) M Series Connectors
408-7455 29 Position (Mixed) M Series Connectors
408-6800 Shield Kit 208783-1 for 104 Position M Series Connector
408-7485 Press-Fit Jackscrews for M Series Connectors
408-7066 Locking Springs for 14, 20, 21, 26 and 41 Position M Series Connectors
408-7067 Locking Springs for 34 and 50 Position M Series Connectors
408-7055 Corner Guide Pins and Sockets for 34 and 50 Position M Series Connectors
408-7056 Corner Guide Pins and Sockets for 75 and 104 Position M Series Connectors
408-7121 Guide Pins and Sockets for 104 CF Position M Series Connectors
408-7013 Pin Hoods for M Series Connectors
408-7094 Pin Hoods w/Mounting Flange for 34 and 50 Position M Series Connectors
408-7103 Pin Hoods w/Mounting Flange for 41 Position M Series Connectors
408-7095 Pin Hoods w/Mounting Flange for 75 Position M Series Connectors

For complete product information, order Catalog 82003

Products for Industrial & Commercial Applications
Dimensions are shown for reference purposes only.
Dimensions are in inches and millimeters unless otherwise specified. Values in brackets are metric equivalents.
Specifications subject to change.
Technical Support Center
1-800-522-6752
www.tycoelectronics.com

Technical Documents

Instruction Sheets provide instructions for assembling or applying the product. They are intended for the Manufacturing Assembler or Operator. (Continued)

408-9731	M Series V.35 Cable Connector Kits
408-7089	Pin Hoods, Closed-End, for 104 CF Position M Series Connectors
408-1238	Shields (Long) for 34 and 50 Position M Series Connectors
408-1197	Shields (Short) for 34 and 50 Position M Series Connectors
408-1298	Shields, 180° (Long) for 14, 20, 26, 34 and 50 Position M Series Connectors
408-1312	Shields, 180° (Short) for 14, 20, 26, 34 and 50 Position M Series Connectors
408-1296	Shields, 90° (Long) for 14, 20, 26, 34 and 50 Position M Series Connectors
408-1297	Shields, 90° (Short) for 14, 20, 26, 34 and 50 Position M Series Connectors
408-7026	Shields, 90° (Short) for 21 and 41 Position M Series Connectors
408-1192	Shields, 180° (Long and Short) for 26 and 41 Position M Series Connectors
408-7220	Shields, 180° and 90° (Long and Short) for 75 Position M Series Connectors
408-1321	Shields, 90° (Short) for 104 Position M Series Connectors
408-7148	Shields, 90° and 45° (Long) for 104 CF Position M Series Connectors
408-7088	Shields, 45° (Short) for 104 CF Position M Series Connectors
408-7423	Shields, 45° (Short) for 160 CF Position M Series Connectors
408-7017	Strain Relief Clamps (Long) for 14 and 20 Position M Series Connectors
408-7018	Strain Relief Clamps (Long) for 26 Position M Series Connectors
408-1313	Strain Relief Clamps (Short) for 14, 20 and 26 Position M Series Connectors
408-7012	Strain Relief Clamps (Long and Short) for 21 and 41 Position M Series Connectors
408-7019	Strain Relief Clamps (Long) for 34 Position M Series Connectors
408-1317	Strain Relief Clamps (Short) for 34 and 50 Position M Series Connectors
408-7216	Strain Relief Clamps (Long) for 75 Position M Series Connectors
408-1368	Strain Relief Clamps (Short) for 75 Position M Series Connectors
408-7020	Strain Relief Clamps (Long) for 50 and 104 Position M Series Connectors
408-1322	Strain Relief Clamps (Short) for 104 Position M Series Connectors
408-1340	Keying Plug (Cylindrical) for Multimate Contact Cavities
408-6613	Application and Maintenance of AMP Hand Crimping Tool 90067
408-7414	Application and Maintenance of AMP Hand Crimping Tool 90225-2
408-7942	Application and Maintenance of AMP Hand Crimping Tool 90310-2
408-7773	Application and Maintenance of AMP Hand Crimping Tool 90331-1
408-7126	AMP Assembly Tool 91016 for Turnable Jackscrews

Introduction

Product Facts

- **Recognized under the Component Program of Underwriters Laboratories Inc., File No. E28476**
- **Certified by Canadian Standards Association, File No. LR7189**
- **Tested to VDE requirements outlined in VDE Test Report No. 4751-1431-1029/A1I** 3544
- **Produced under a Quality Management System certified to ISO 9001**

  A copy of the certificate is available upon request.

  ISO 9001 Certified
- **Designed to meet IEC (440 V) requirements**
- **True metric dimensions—contacts on 5 [.197] centers (drawer connectors and special in-line connectors and pin headers have contacts on 5.08 [.200] centers)**
- **Panel mount versions require no hardware for mounting**
- **Polarized housings**
- **4- thru 36-position square grid configurations can be mounted to and removed from either front or rear of panel**
- **Housings made of UL rated 94V-0 thermoplastic**
- **Strain reliefs available for 6- thru 36-position square grid, panel mount housings**
- **Drawer connectors available in 4- thru 30-position sizes, standard and low profile versions**

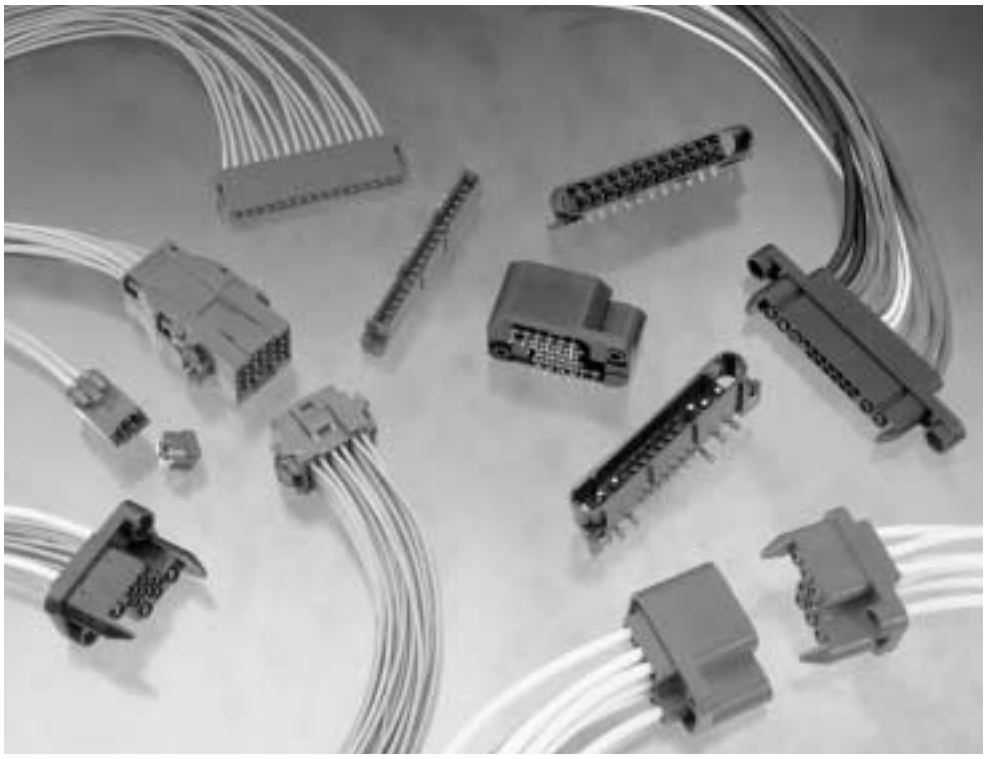

AMP Metrimate connectors are true metric specification connectors designed for panel, free-hanging or pc board application. These connectors offer improvements in durability, density and electrical performance over competitive soft-shell pin and socket connectors. They are ideally suited for equipment manufacturers engaged in both national and international markets. This versatile pin and socket connector line is designed to meet the general requirements of various testing and approval agencies, including UL, CSA, VDE and IEC.

Presently, connectors are available in various design configurations and the most popular sizes to satisfy a variety of application requirements. Such designs include: square grid connectors for free-hanging and/or panel mounting; free-hanging in-line connectors; square grid and in-line pin and socket headers for pc board mounting; and drawer connectors for rack and panel mounting with radial float.

For high electrical performance and maximum economy, all connectors employ housings made of UL rated 94V-0 thermoplastic.

Electrical Characteristics:

Voltage Rating: UL (600 VAC and VDC), CSA (600 VAC and VDC), VDE (380 VAC, 450 VDC), IEC (440 V)

Dielectric Strength: 2000 Volts, RMS (at sea level)

Current Rating: See contact current carrying capability data on page 9095, 9096

Insulation Resistance: 5000 Megohms (Min.)

Termination Resistance: Dependent upon individual contact type. Refer to applicable Product Specification.

Environmental Characteristics:

Temperature Range: -55°C to +130°C

Mechanical Characteristics:

Air Gap: Exceeds 3.2 [.125]

Creep Distance: Exceeds 4 [.157]

Mounting Distance (Live Contact-to-Panel): Exceeds 6 [.237]

Acceptable Panel Thicknesses: 0.8-2.3 [.030-.090]

For complete product information, order Catalog 82045

Products for Industrial & Commercial Applications

Dimensions are shown for reference purposes only.

Dimensions are in inches and millimeters unless otherwise specified. Values in brackets are metric equivalents.

Specifications subject to change.

Technical Support Center
1-800-522-6752
www.tycoelectronics.com

Metrimate Connector Application

Drawer Connectors

Standard Drawer Connectors, Rack and Panel Applications

Plug
4, 12, 19 and 25 Position Connectors; 8 and 15 Position Power Connectors
(Pages 9226 and 9227)

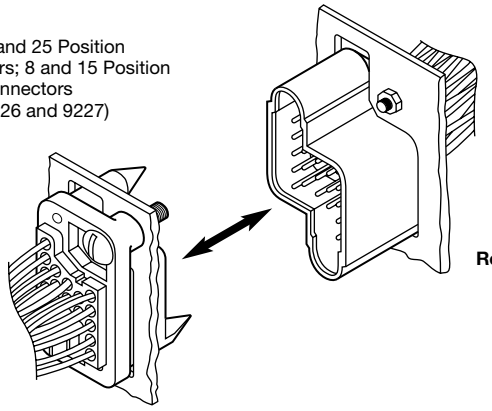

Receptacle
4, 12, 19 and 25 Position Connectors; 8 and 15 Position Power Connectors
(Pages 9226 and 9227)

Standard Drawer Connectors, Wire-To-Board

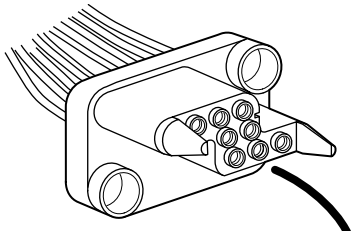

PC Pin Header (shown)
12, 19 and 25 Position Pin Headers (Solder); 25 Position Pin Header (ACTION PIN); 8 and 15 Position Power Drawer Pin Headers (Pages 9226 and 9227)

Plug (for Sockets)—Mates with PC Pin Header

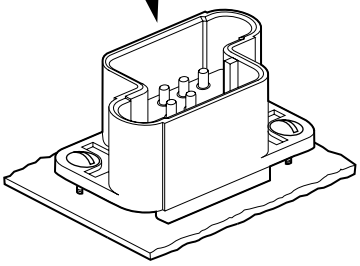

PC Socket Header
19 and 25 Position Socket Headers (Solder); 8 and 15 Position Power Drawer Socket Headers
(Pages 9226 and 9227)

Receptacle (for Pins)—Mates with PC Socket Header

Low Profile Drawer Connectors, Wire-To-Board, and Wire-To-Wire

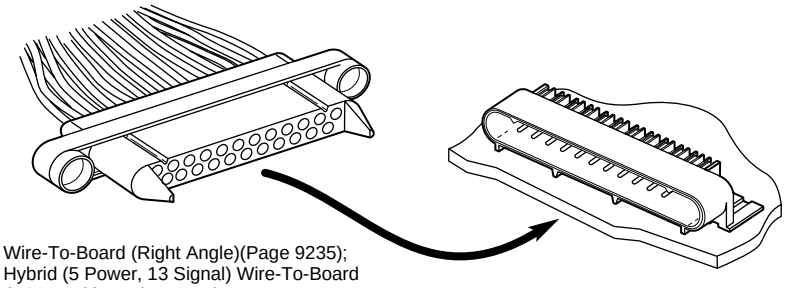

23 Position Wire-To-Board (Right Angle)(Page 9235); 18 Position Hybrid (5 Power, 13 Signal) Wire-To-Board (Right Angle); 30 Position Wire-To-Wire

For complete product information, order Catalog 82045

Products for Industrial & Commercial Applications
Dimensions are shown for reference purposes only.
Dimensions are in inches and millimeters unless otherwise specified. Values in brackets are metric equivalents.
Specifications subject to change.
Technical Support Center 1-800-522-6752 www.tycoelectronics.com

Metrimate Connector Application

Square Grid Connectors

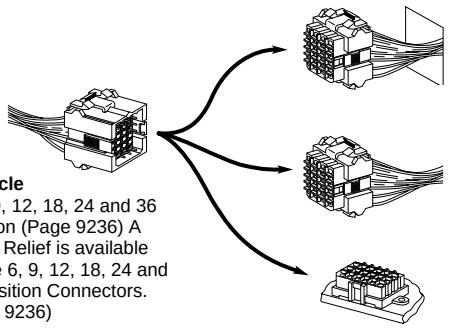

Receptacle
4, 6, 9, 12, 18, 24 and 36 Position (Page 9236) A Strain Relief is available for the 6, 9, 12, 18, 24 and 36 Position Connectors. (Page 9236)

Plug – Panel Mount
(From either side)
4, 6, 9, 12, 18, 24 and 36 Position (Page 9236)

Plug – Free Hanging
4, 6, 9, 12, 18, 24 and 36 Position (Page 9236)

PC Board Mount Socket Header
4, 6, 9, 12, 18, 24 and 36 Position (Page 9239)

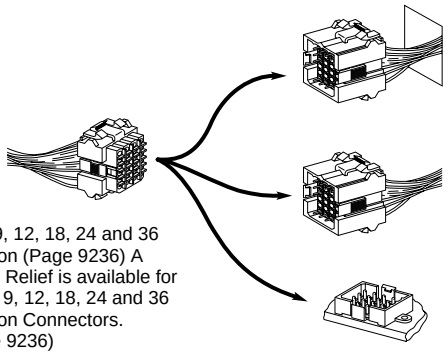

Plug
4, 6, 9, 12, 18, 24 and 36 Position (Page 9236) A Strain Relief is available for the 6, 9, 12, 18, 24 and 36 Position Connectors. (Page 9236)

Receptacle – Panel Mount
(From either side)
4, 6, 9, 12, 18, 24 and 36 Position (Page 9236)

Receptacle – Free Hanging
4, 6, 9, 12, 18, 24 and 36 Position (Page 9236)

PC Board Mount Pin Header
4, 6, 9, 12, 18, 24 and 36 Position (Page 9239)

In-Line Connectors

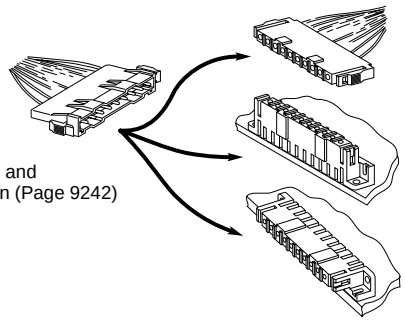

Receptacle
1, 3, 6, 10 and 16 Position (Page 9242)

Plug – Free Hanging
1, 3, 6, 10 and 16 Position (Page 9242)

PC Board Mount Socket Header, Straight-Thru
3, 6, 10 and 16 Position (Page 9244)

PC Board Mount Socket Header, Right-Angle
3, 6, 10 and 16 Position (Page 9244)

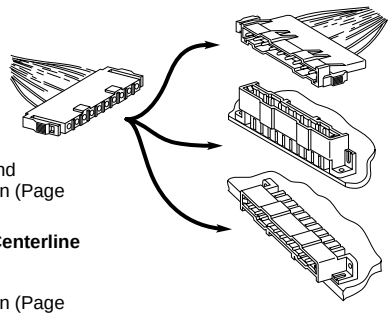

Plug
3, 6, 10 and 16 Position (Page 9242)

5.08 [.200] Centerline Connector
6, 10 and 19 Position (Page 9247)

Receptacle – Free Hanging
3, 6, 10 and 16 Position (Page 9242)

PC Board Mount Pin Header, Straight-Thru
3, 6, 10 and 16 Position (Page 9244)

PC Board Mount Pin Header, Right-Angle
3, 6, 10 and 16 Position (Page 9244)

5.08 [.200] Centerline Pin Header, Right-Angle
6, 10 and 19 Position (Page 9247)

For complete product information, order Catalog 82045

Products for Industrial & Commercial Applications
Dimensions are shown for reference purposes only.
Dimensions are in inches and millimeters unless otherwise specified. Values in brackets are metric equivalents.
Specifications subject to change.
Technical Support Center 1-800-522-6752 www.tycoelectronics.com

Drawer Connectors

Standard Drawer Connector Panel Mount

Product Facts

- 4-, 12-, 19- and 25-position connectors for Size 16 contacts
- 8-position connector for Size 8 power contacts, and a 15-position connector for 3 Size 8 power contacts and 12 Size 16 contacts
- Provides "blind" mating with up to 2.3 [.090] misalignment in any direction
- Guide pins molded into plug half
- Plug and receptacle can be front- or rear-panel mounted

Material:

Black glass-filled thermoplastic, 94V-0 rated

Related Product Data:

Contacts—pages 9101-9103, 9109, 9112, 9113, 9116, 9117

Mounting Screw—page 9227

Keying Plug—page 9247

Dimensional Specifications—pages 9228-9232

Performance Characteristics—page 9223

Technical Documents:

Product Specifications
108-10033, 108-10045

Application Specifications
114-10039, 114-10014

Receptacle Housing
(Accepts Pin Contacts)

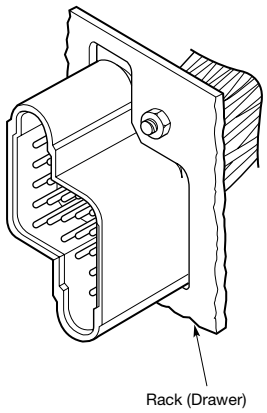

Plug Housing
(Accepts Socket Contacts)

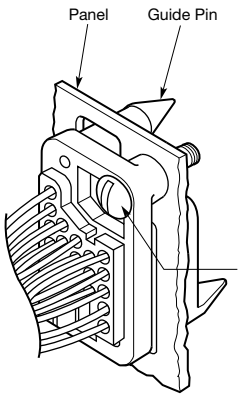

Rack (Drawer)

PC Header
(Pin Header shown
mates with Plug Housing)

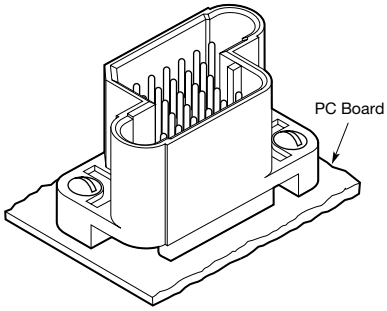

Standard Drawer Connectors

No. of Positions	Connector Housing Part Numbers*			PC Header Part Numbers			Grounding Pins should not be used in these receptacle cavities
				Pin Headers		Socket Headers	
	Plug	Receptacle	Receptacle With 8/32 Inserts	Solder Tails	ACTION PIN Tails	Solder Tails	
4	212608-1	212609-1	213749-1	—	—	—	1 and 4
12	211758-1	211759-1	213748-1	213824-1[A]	—	—	1 and 12
19	208210-2	208209-2	—	213738-1[A] 213738-3[A]**	—	—	1 and 19
25	211150-1	211149-1	—	213672-1[A]	213558-1[B] 213558-2[C] 213779-3[C]***	213881-1[A] 213784-1[D] —	1 and 25

*Housings only, order contacts separately. See pages 9095, 9096 for contact current carrying capabilities.

**Select loaded with posted Size 16 contacts: Pins (1, 4-8, 12-16, 19) and Ground Pins (2-3, 9-11, 17-18).

***Select loaded with 12 Ground Pins (0.76 [.030] Dia.): 2, 6, 10-16, 20-21 and 24.

PC Header Plating Code:

[A] Contact brass plated 0.00076 [.000030] min. gold on mating end, gold flash remainder, both over 0.00127 [.000050] min. nickel underplating. Post end brass plated 0.00254 [.000100] min. tin-lead over 0.00254 [.000100] min. copper. Spring—Stainless steel.

[B] Contact phosphor bronze plated 0.00254 [.000100] min. tin-lead over 0.00127 [.000050] min. nickel.

[C] Contact phosphor bronze plated 0.00076 [.000030] min. gold on the mating area, 0.00038 [.000150] min. tin-lead on the ACTION PIN tail end, all over 0.00127 [.000050] min. nickel.

[D] Contact brass plated 0.00127 [0.000050] min. tin-lead over 0.00127 [0.000050] min. nickel on mating end. Post end brass plated 0.00254 [0.000100] min. tin-lead over 0.00127 [0.000050] mimn. nickel. Spring—Stainless steel.

Products for Industrial & Commercial Applications

Dimensions are shown for reference purposes only.

Dimensions are in inches and millimeters unless otherwise specified. Values in brackets are metric equivalents.

Specifications subject to change.

Technical Support Center
1-800-522-6752
www.tycoelectronics.com

Drawer Connectors

Power Drawer Connectors, Size 8

For use with Size 8 contacts on pages 9112, 9113 and Size 16 contacts on pages 9101-9103, 9109, 9116, 9117.

Related Product Data:

Dimensional Specifications—
pages 9233 and 9234

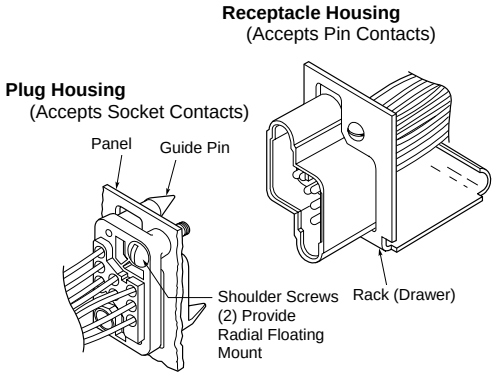

Blindmate Power Connectors

No. of Positions	Housing Part Numbers*			PCB Headers	
	Plug	Receptacle	Receptacle with 8/32 Insert	Pin	Socket
8 (8 Size 8)	213499-1	213500-1	213752-1	213882-1	213883-1
15 (3 Size 8, 12 Size 16)	213426-1	213427-1	—	213713-1[1]	213908-2[1]

[1] Loaded with Size 16 contacts only.
*Housing only, **order contacts separately.**

Drawer Hardware

Mounting Screw

Material:

Stainless steel

Thread Size	Part Number
M4×0.7-6H/6g	208211-1

Note: These shoulder screws are used for mounting the plug housing and they provide float for positioning of misaligned connectors. Two are required for each plug. Mounting screws are to be ordered separately. Nuts are to be supplied by the customer.

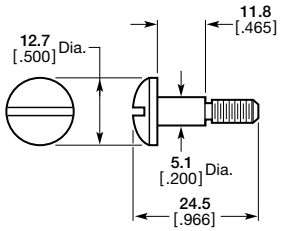

Thread Size - M4×0.7-6H/6g

Screw Kits

Part Number 213283-2

Kit Includes: 2—M4 screws, 2—Springs, 2—Washers

Screw Kits are recommended in order to compensate for misaligned connector halves and to provide float in X, Y, and Z directions.

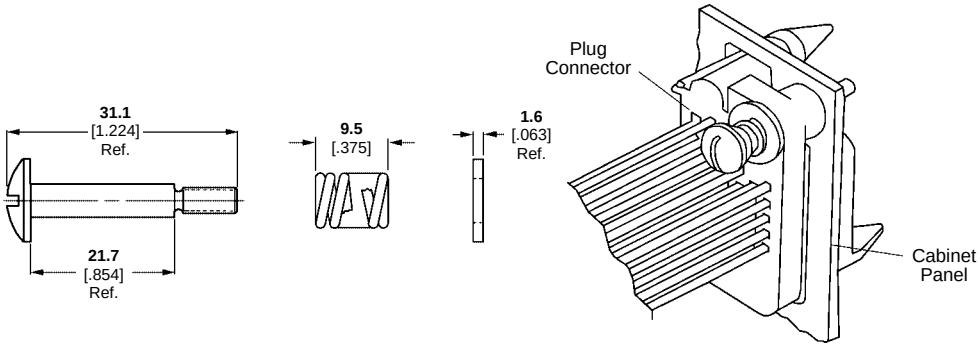

For complete product information, order Catalog 82045

For complete product information, order Catalog 82045

Drawer Connector Specifications

4 Position Housings

Plug (for Sockets)

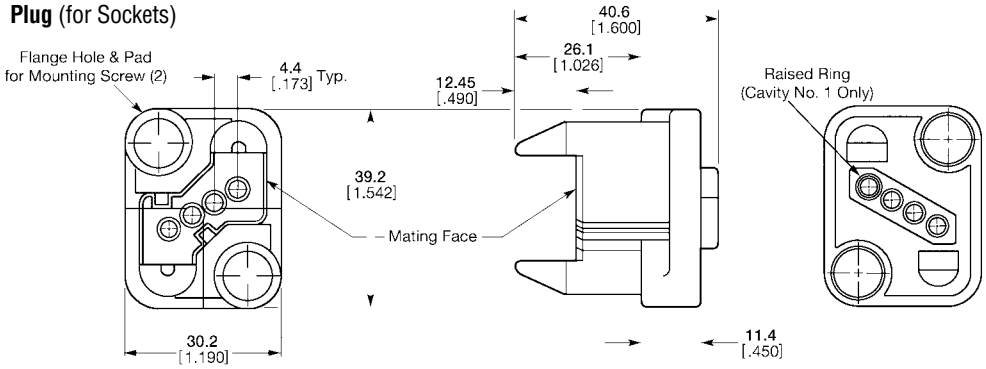

Receptacle (for Pins)

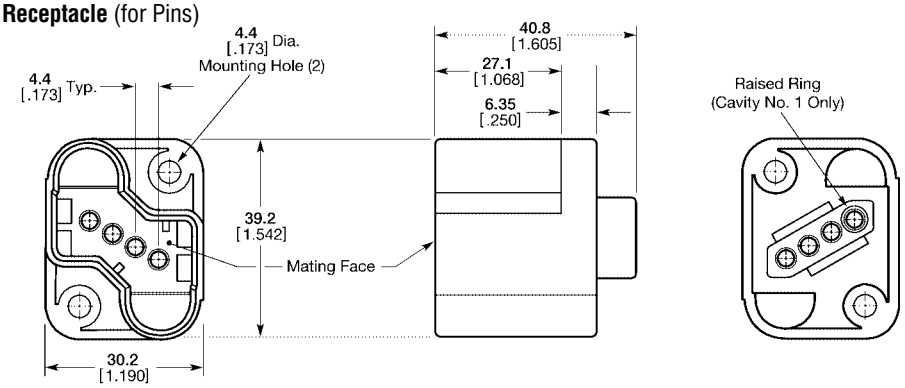

12 Position Housings

Plug (for Sockets)

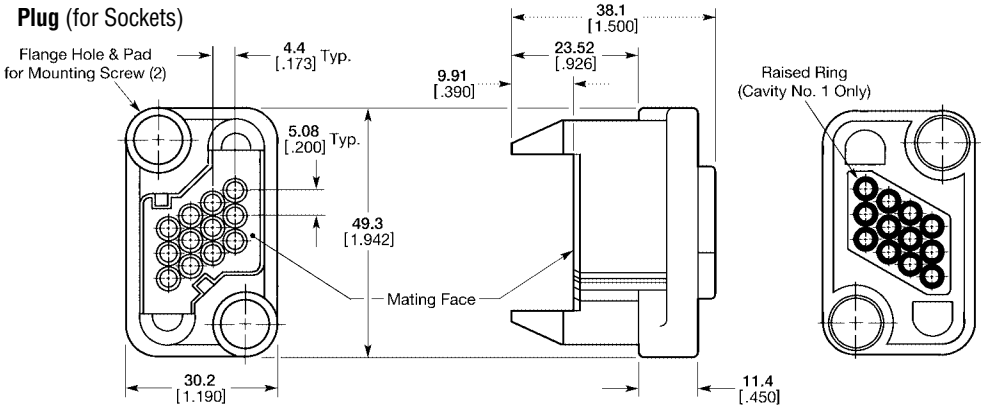

Receptacle (for Pins)

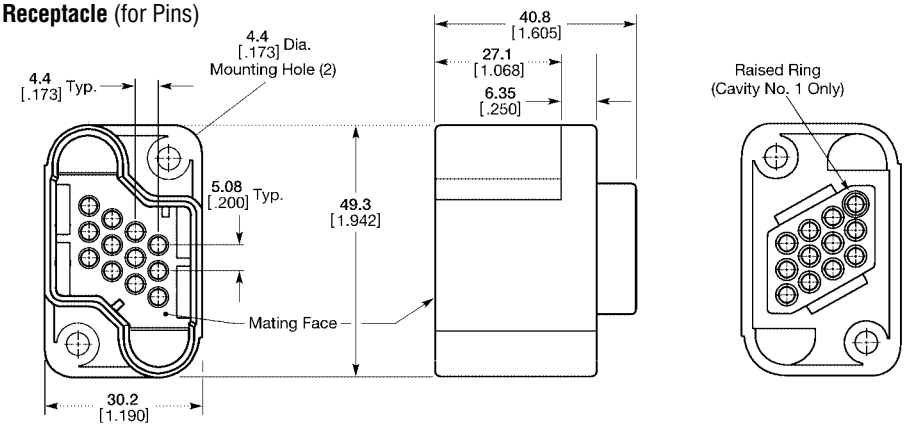

For complete product information, order Catalog 82045

Products for Industrial & Commercial Applications
Dimensions are shown for reference purposes only.
Dimensions are in inches and millimeters unless otherwise specified. Values in brackets are metric equivalents.
Specifications subject to change.
Technical Support Center 1-800-522-6752 www.tycoelectronics.com

Drawer Connector Specifications

19 Position Housings

Plug (for Sockets)

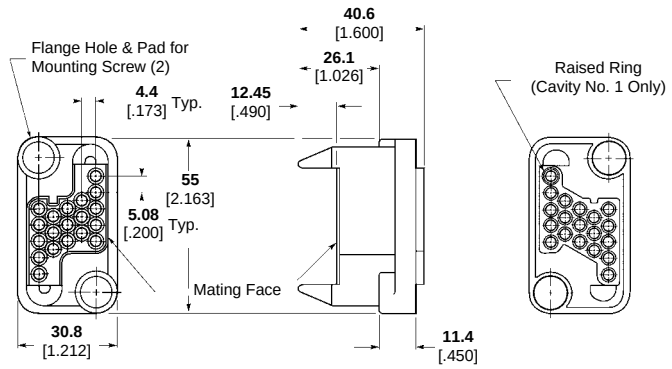

Receptacle (for Pins)

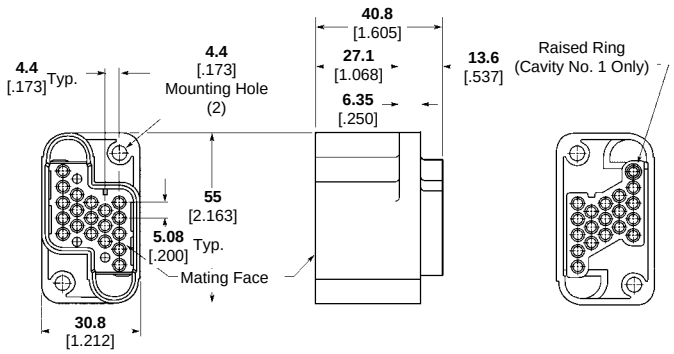

25 Position Housings

Plug (for Sockets)

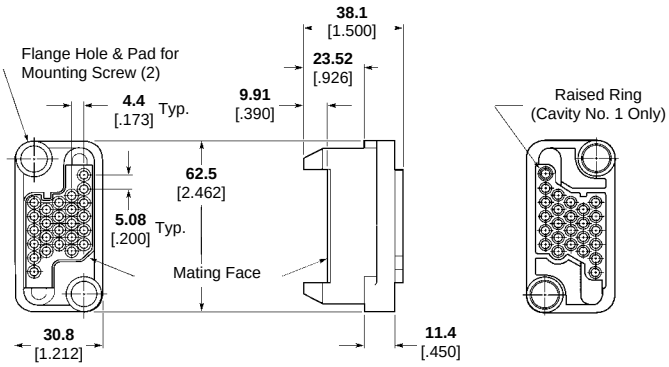

Receptacle (for Pins)

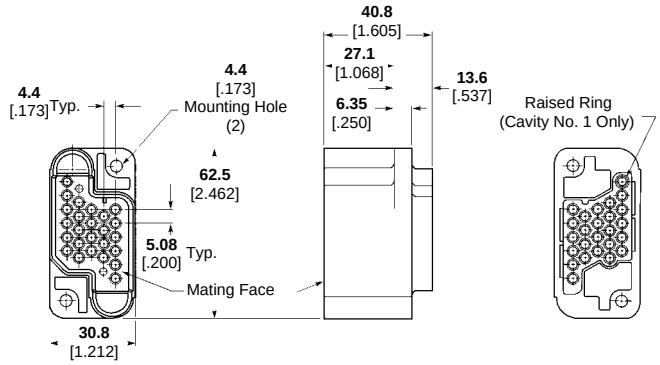

For complete product information, order Catalog 82045

Drawer Connector Specifications—PC Pin Headers

12 Position Header

PC Pin Header (Solder Tails)

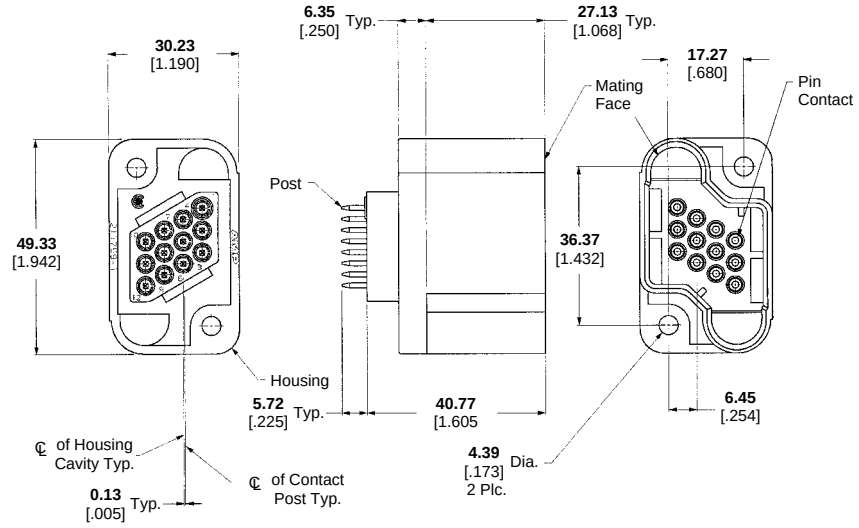

19 Position Header

PC Pin Header (Solder Tails)

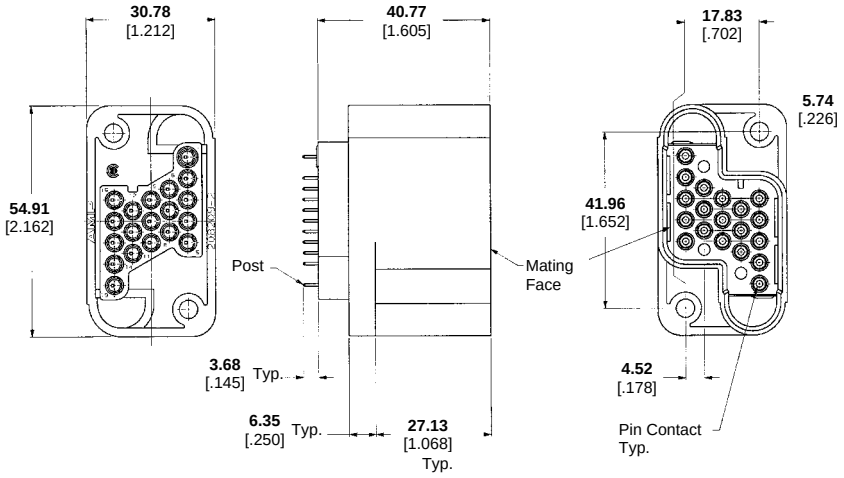

For complete product information, order Catalog 82045

Products for Industrial & Commercial Applications

Dimensions are shown for reference purposes only.

Dimensions are in inches and millimeters unless otherwise specified. Values in brackets are metric equivalents.

Specifications subject to change.

Technical Support Center
1-800-522-6752
www.tycoelectronics.com

Drawer Connector Specifications—PC Pin Headers

25 Position Headers
(mate with Plug Connector Part Number 211150-1**)**

PC Pin Header (Solder Tails)

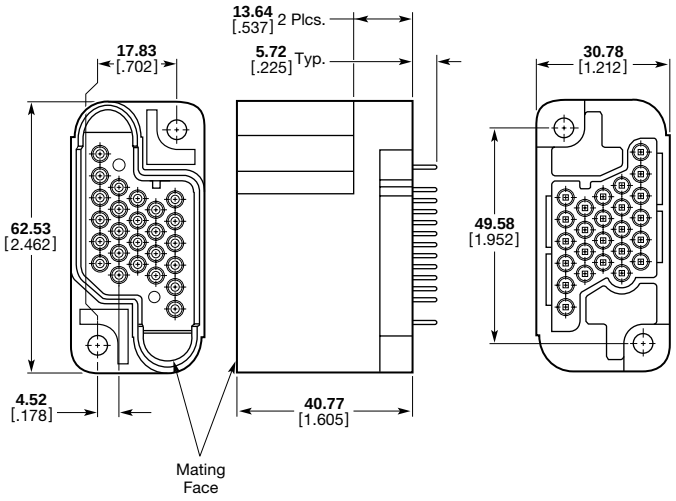

PC Pin Header (ACTION PIN Contacts)

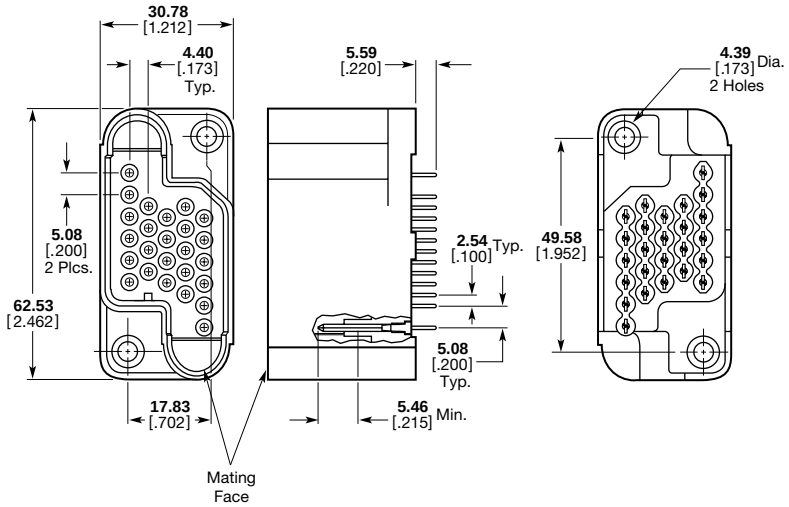

Drawer Connector Specifications—PC Socket Headers

25 Position Headers

PC Socket Header (Solder Tails)

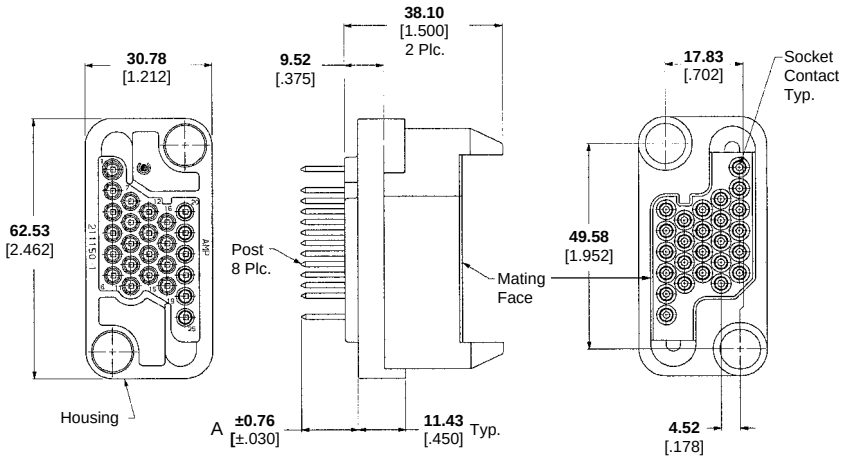

Power Drawer Connector Specifications

8 Position Housings
(Size 8)

Plug (for Sockets)

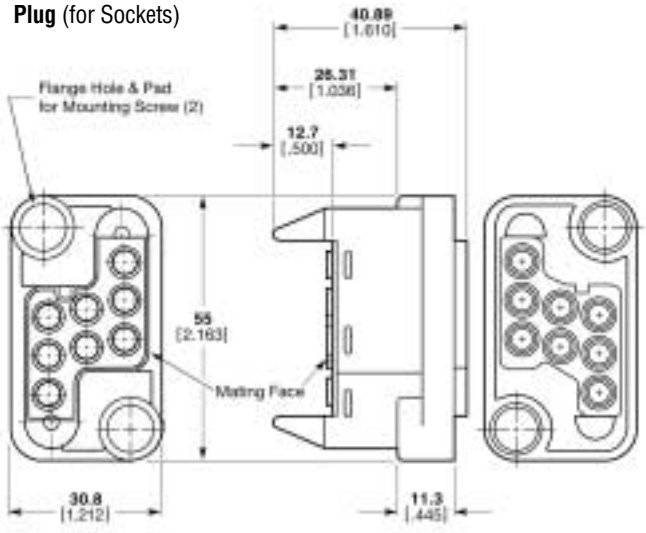

15 Position Housings
(Accept 3 Size 8 Contacts and 12 Size 16 Contacts)

Plug (for Sockets)

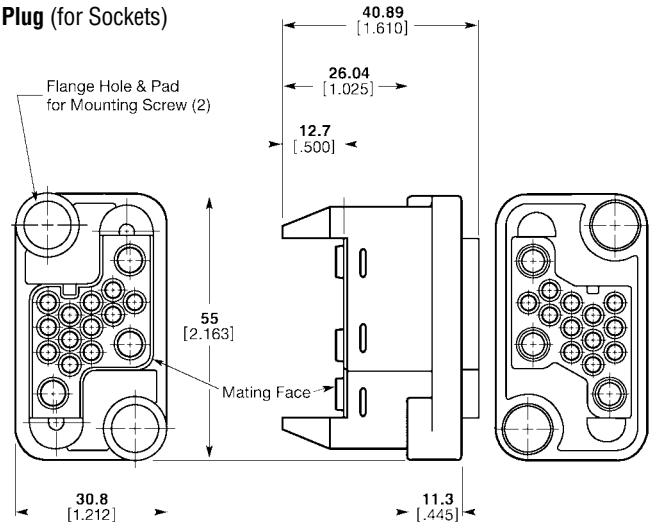

Receptacle (for Pins)
(Size 8)

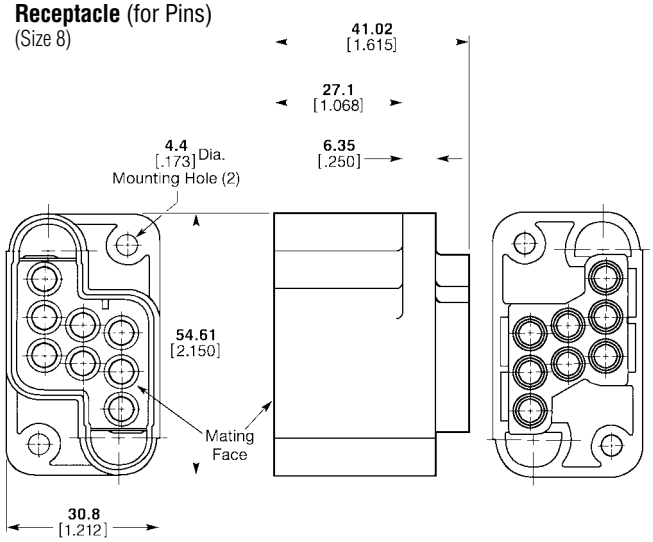

Receptacle (for Pins)
(Accept 3 Size 8 Contacts and 12 Size 16 Contacts)

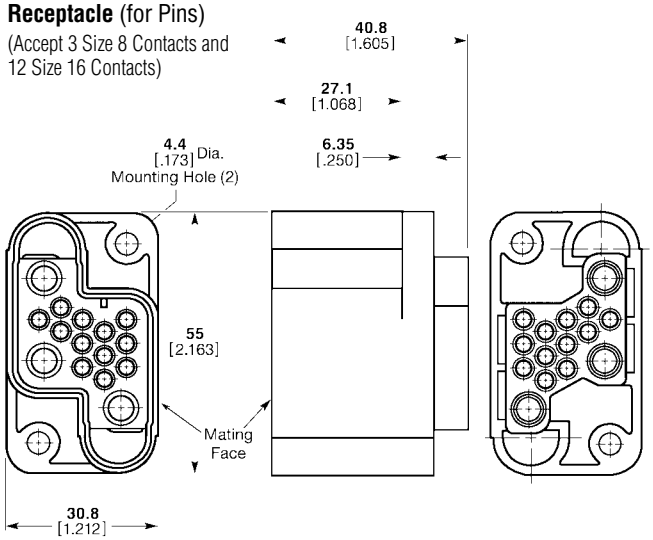

For complete product information, order Catalog 82045

Products for Industrial & Commercial Applications
Dimensions are shown for reference purposes only.
Dimensions are in inches and millimeters unless otherwise specified. Values in brackets are metric equivalents.
Specifications subject to change.
Technical Support Center
1-800-522-6752
www.tycoelectronics.com

Power Drawer Connector Specifications—PCB Headers

8 Position Headers

PC Pin Header

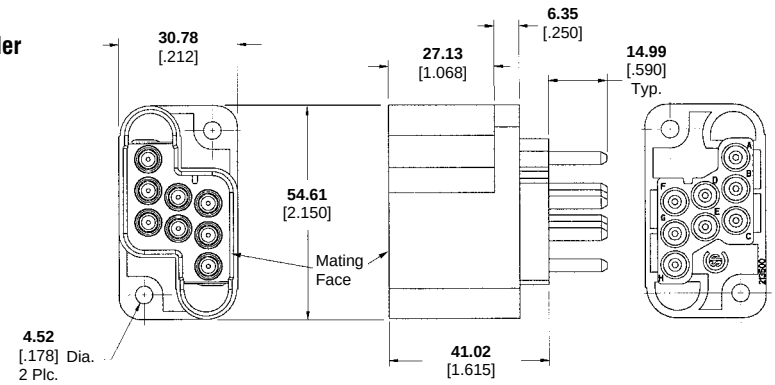

PC Socket Header

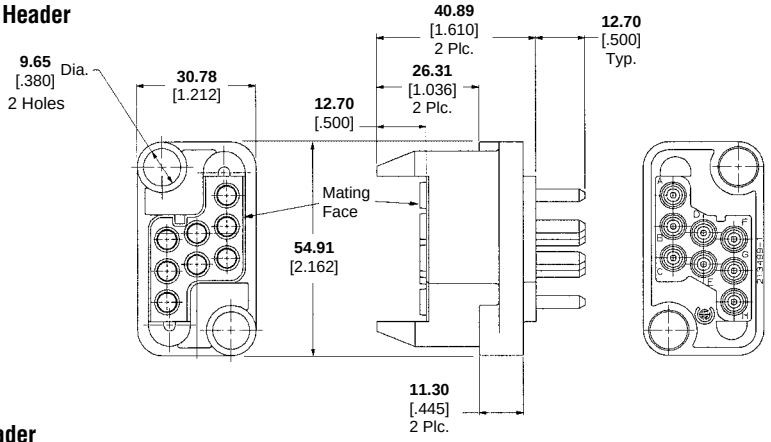

15 Position Headers

PC Pin Header

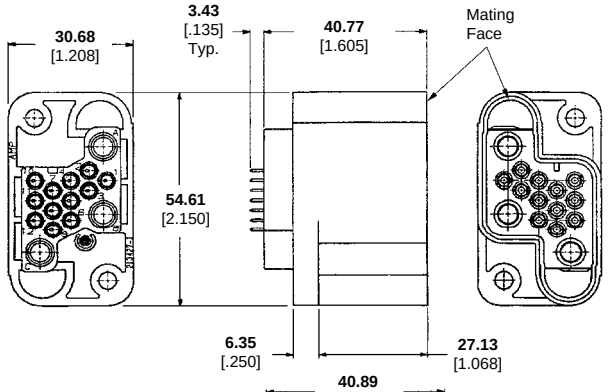

PC Socket Header

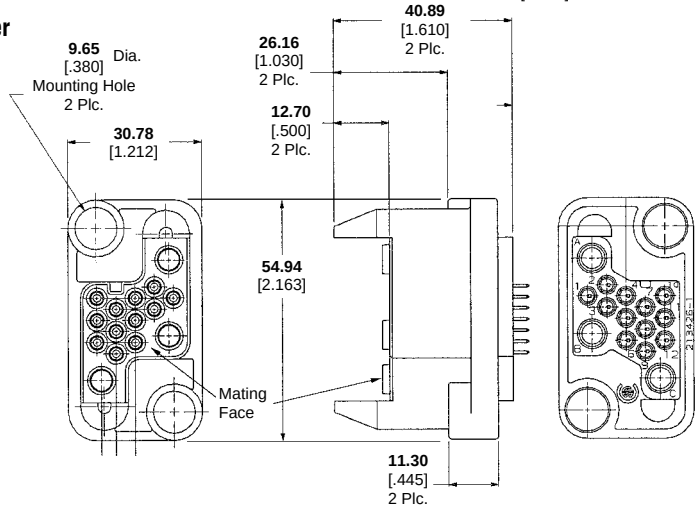

For complete product information, order Catalog 82045

Products for Industrial & Commercial Applications

Dimensions are shown for reference purposes only.

Dimensions are in inches and millimeters unless otherwise specified. Values in brackets are metric equivalents.

Specifications subject to change.

Technical Support Center
1-800-522-6752
www.tycoelectronics.com

Low Profile Drawer Connectors

23 Position Plug Housing (for Sockets)

Part Number 213766-1

Material and Finish:

Housing—Black glass-filled thermoplastic, 94V-0 rated

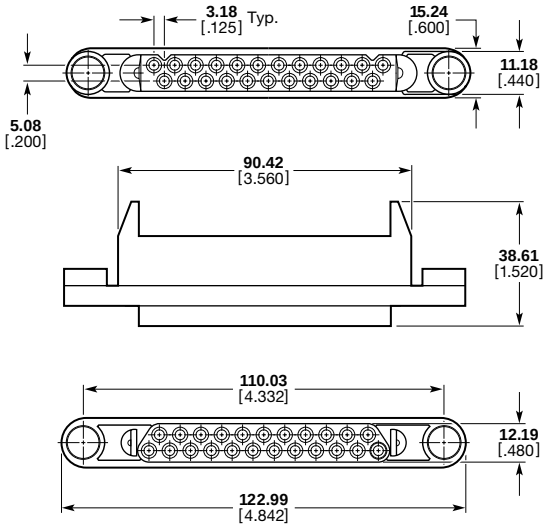

23 Position Right-Angle Receptacle Header

Part Number 213768-1

Material and Finish:

Housing—Black glass-filled thermoplastic, 94V-0 rated

Contacts—Copper alloy duplex plated 0.00076 [.000030] min. gold on mating end, tin-lead on termination end, with entire contact nickel underplated

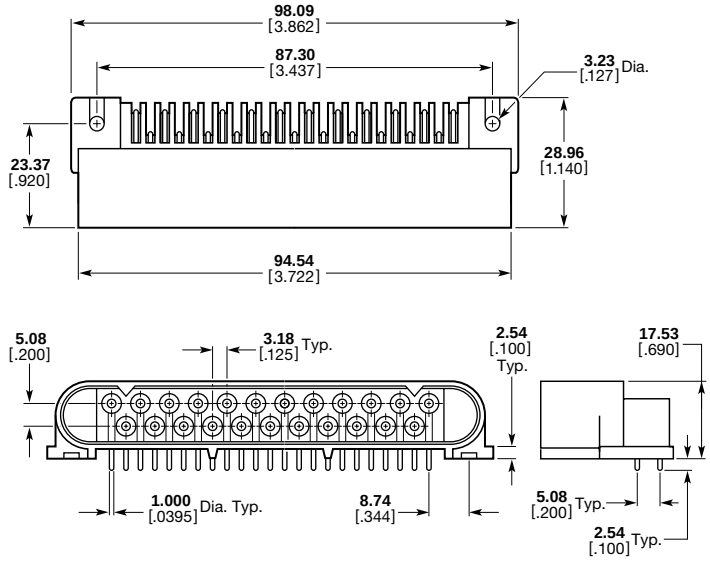

For complete product information, order Catalog 82045

Products for Industrial & Commercial Applications
Dimensions are shown for reference purposes only.
Dimensions are in inches and millimeters unless otherwise specified. Values in brackets are metric equivalents.
Specifications subject to change.
Technical Support Center
1-800-522-6752
www.tycoelectronics.com

Square Grid Connectors

Free-Hanging and Panel Mount Connectors

Material:

Red thermoplastic, 94V-0 rated

Related Product Data:

Mateable Connectors:

PC Board Headers—page 9239

Contacts—pages 9101-9103, 9109, 9116, 9117

Keying Plug—page 9247

Strain Relief Kits—See below

Dimensional Specifications — pages 9237 and 9238

Performance Characteristics— page 9223

Technical Documents:

Product Specification
108-10033

Application Specification
114-10040

Plug Housing
(Accepts Socket Contacts)

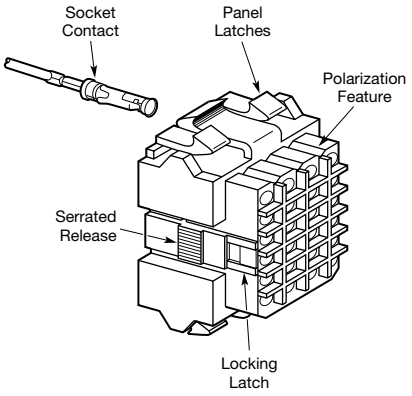

Receptacle Housing
(Accepts Pin Contacts)

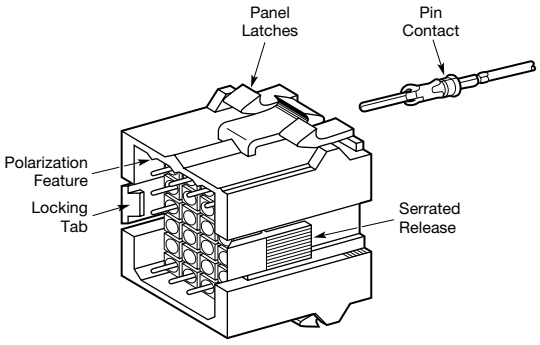

No. of Positions	Housing Part Numbers*	
	Plug	Receptacle
4	207015-1	207016-1
6	207152-1	207153-1
9	207439-1	207440-1
12	207017-1	207018-1
18	207442-1	207443-1
24	207304-1	207305-1
36	207019-1	207020-1

*Housing only, **order contacts separately.**

Strain Relief Kits

(For use with plugs and/or receptacles)

Material:

Red thermoplastic, 94V-0 rated

Related Product Data:

Dimensional Specifications— page 9238

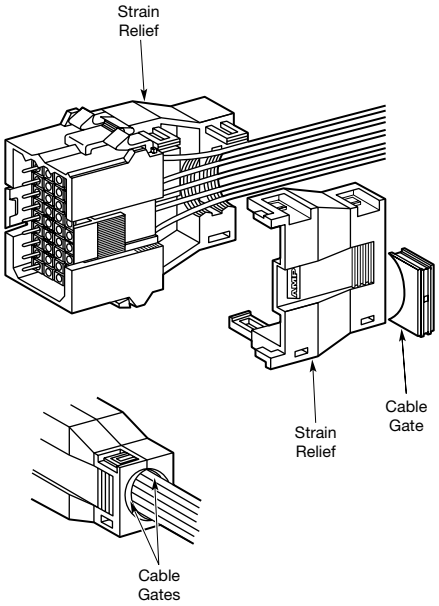

No. of Positions (Connector)	Cable O.D. (Max.)	Strain Relief Kit Part Numbers	
		Individual Packs	Bulk Packaging
6	**9.5** .375	207600-1	213792-1
9	**11.7** .460	207601-1	213793-1
12	**13.45** .530	207602-1	213794-1
18	**16.5** .650	207603-1	213795-1
24	**19.05** .750	207088-1	213796-1
36	**23.3** .918	207604-1	213797-1

Notes: [1] Cable gates are supplied with each strain relief kit to accommodate various cable diameters up to the maximum specified.
[2] Components for all strain relief kits are packaged unassembled.

For complete product information, order Catalog 82045

Products for Industrial & Commercial Applications

Dimensions are shown for reference purposes only.

Dimensions are in inches and millimeters unless otherwise specified. Values in brackets are metric equivalents.

Specifications subject to change.

Technical Support Center
1-800-522-6752
www.tycoelectronics.com

Square Grid Connector Specifications

4 and 6 Position Housings

Plug (for Sockets)

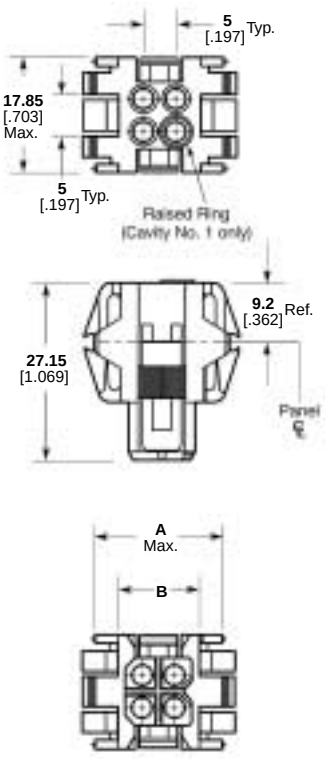

Receptacle (for Pins)

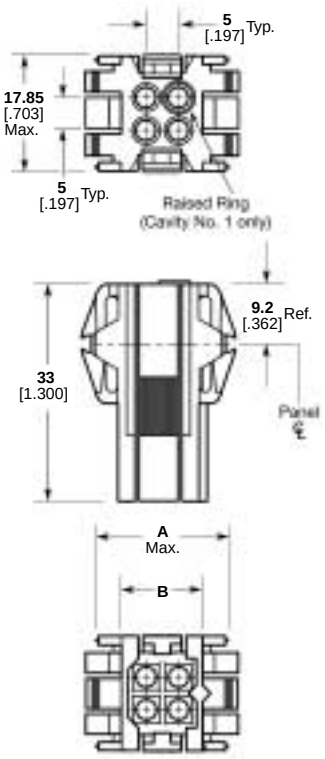

9, 12 and 18 Position Housings

Plug (for Sockets)

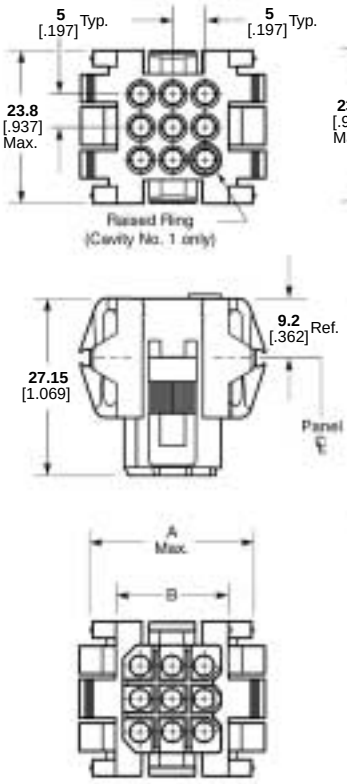

Receptacle (for Pins)

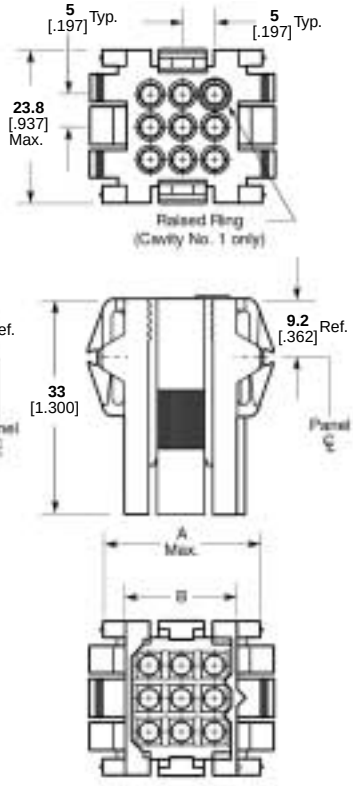

No. of Positions	Connector Dimensions	
	A	B
4	**20.1** .791	**12.6** .496
6	**25.04** .986	**17.5** .689
9	**24.8** .976	**17.5** .689
12	**29.8** 1.173	**22.5** .886
18	**40.45** 1.592	**32.85** 1.293

Square Grid Connector Specifications

24 and 36 Position Housings

Plug (for Sockets)

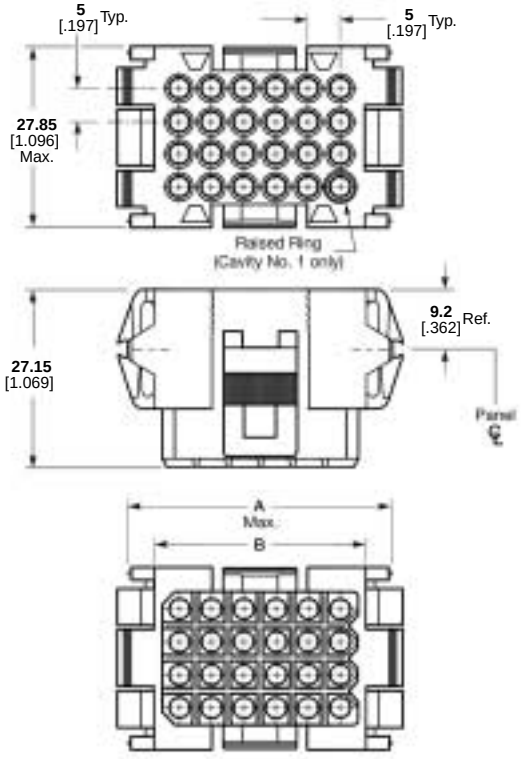

Receptacle (for Pins)

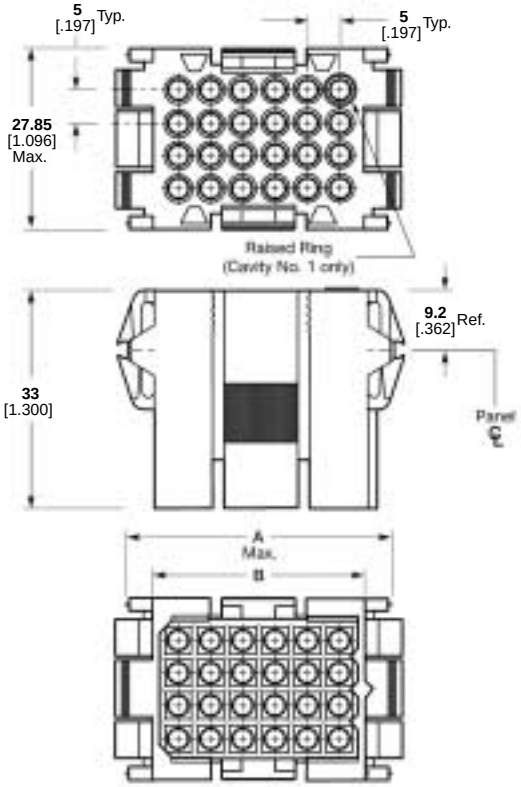

No. of Positions	Connector Dimensions A	B
24	**40.45** 1.592	**32.85** 1.293
36	**55.45** 2.183	**47.85** 1.885

Strain Relief Kits (for 6, 9, 12, 18, 24 and 36 Position Connectors)

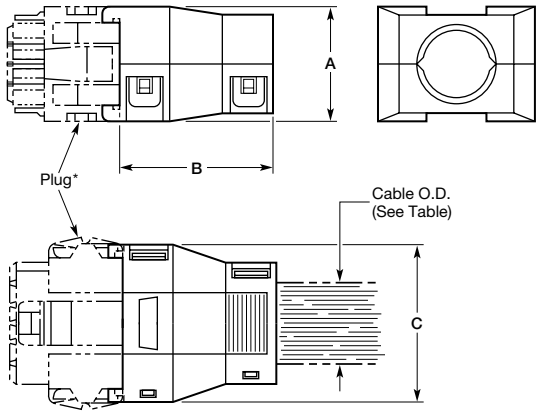

No. of Positions	Dimensions A	B	C	Cable O.D. (Max.)
6	**17.75** .700	**25.53** 1.005	**22.75** .896	**9.5** .375
9	**23.9** .940	**32.4** 1.275	**22.75** .896	**11.7** .460
12	**23.9** .940	**32.4** 1.275	**27.58** 1.086	**13.45** .530
18	**23.9** .940	**38.1** 1.500	**38.1** 1.500	**16.5** .650
24	**27.94** 1.100	**38.1** 1.500	**38.1** 1.500	**19.05** .750
36	**27.94** 1.100	**38.1** 1.500	**53.1** 2.090	**23.3** .918

*Plug shown for illustration purposes only. Strain Relief Kits can be used on either plug or receptacle.

For complete product information, order Catalog 82045

Products for Industrial & Commercial Applications

Dimensions are shown for reference purposes only.

Dimensions are in inches and millimeters unless otherwise specified. Values in brackets are metric equivalents.

Specifications subject to change.

Technical Support Center
1-800-522-6752
www.tycoelectronics.com

Square Grid Connectors

PC Board Mount Headers

Material and Finish:

Housing—Red thermoplastic, 94V-0 rated

Pin Contacts—Copper alloy, plated tin or gold duplex

Socket Contacts—Phosphor bronze, plated tin or gold duplex

Related Product Data:

Mateable Connectors:

Free-Hanging Connectors—
page 9236 (Pin and Socket Headers do not mate.)

Dimensional Specifications—
pages 9240 thru 9242

Performance Characteristics—
page 9223

Technical Documents:

Product Specification
108-10033

Application Specification
114-10040

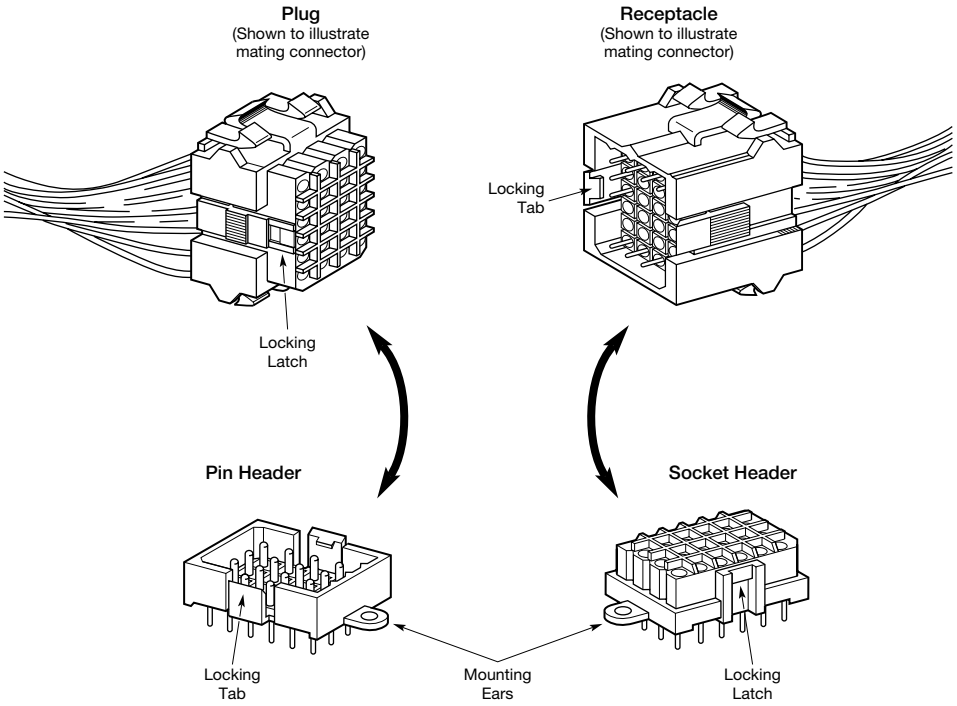

No. of Positions	Contact Plating	Pin Header Part Numbers		Mates with Plug Part Numbers (Page 9236)	Socket Header Part Numbers		Mates with Receptacle Part Numbers (Page 9236)
		With Mounting Ears	Without Mounting Ears		With Mounting Ears	Without Mounting Ears	
4	Tin	207119-1	207119-2	207015-1	207496-1	207496-2	207016-1
	Gold*	207119-3	207119-4		207496-3	207496-4	
6	Tin	207158-1	207158-2	207152-1	207524-1	207524-2	207153-1
	Gold*	207158-3	207158-4		207524-3	207524-4	
9	Tin	207441-1	207441-2	207439-1	207526-1	207526-2	207440-1
	Gold*	207441-3	207441-4		207526-3	207526-4	
12	Tin	207120-1	207120-2	207017-1	207528-1	207528-2	207018-1
	Gold*	207120-3	207120-4		207528-3	207528-4	
18	Tin	207444-1	207444-2	207442-1	207530-1	207530-2	207443-1
	Gold*	207444-3	207444-4		207530-3	207530-4	
24	Tin	206763-1	206763-2	207304-1	207532-1	207532-2	207305-1
	Gold*	206763-3	206763-4		207532-3	207532-4	
36	Tin	207121-1	—	207019-1	207534-1	207534-2	207020-1
	Gold*	207121-3	207121-4		207534-3	207534-4	

*Duplex plated 0.00076 [.000030] gold on mating end, tin-lead on termination end, with entire contact nickel underplated.
Note: Pin and Socket Headers do not mate.

For complete product information, order Catalog 82045

Products for Industrial & Commercial Applications
Dimensions are shown for reference purposes only.
Dimensions are in inches and millimeters unless otherwise specified. Values in brackets are metric equivalents.
Specifications subject to change.
Technical Support Center
1-800-522-6752
www.tycoelectronics.com

Square Grid Pin Header Specifications

4 and 6 Position Headers

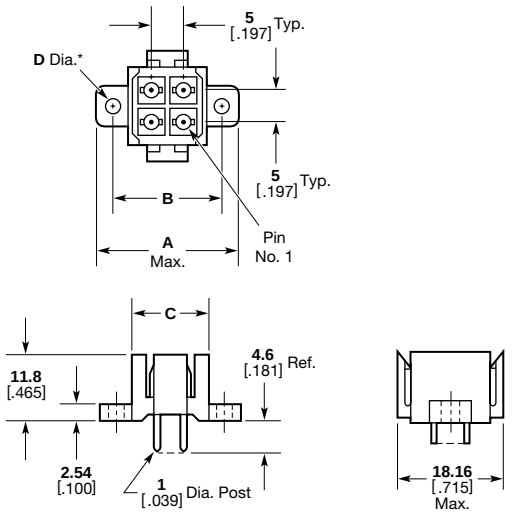

9, 12 and 18 Position Headers

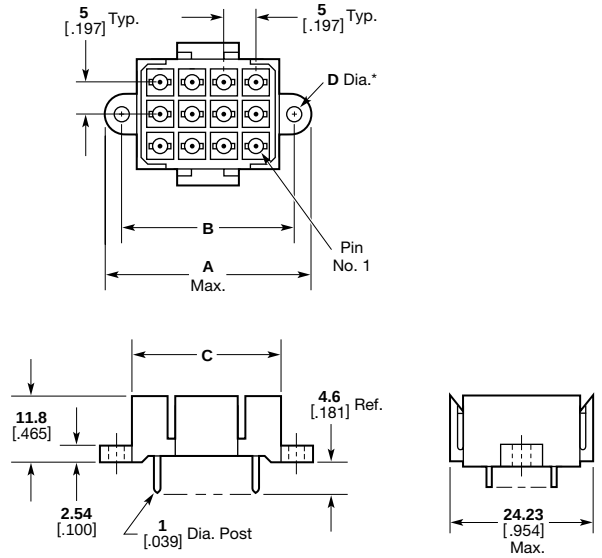

No. of Positions	Header Dimensions			
	A	B	C	D*
4	**22.61** .890	**17.4** .685	**12.7** .500	**2.65** .104
6	**27.69** 1.090	**22.4** .882	**17.6** .693	**2.65** .104
9	**27.69** 1.090	**22.4** .882	**17.78** .700	**2.65** .104
12	**32.5** 1.280	**27.3** 1.075	**22.61** .890	**2.65** .104
18	**47.32** 1.863	**40.6** 1.598	**32.85** 1.293	**3.3** .130

*__D__ Dia.—2.65 [.104] for No. 2 screw; 3.3 [.130] for No. 4 screw.

For complete product information, order Catalog 82045

Products for Industrial & Commercial Applications

Dimensions are shown for reference purposes only.

Dimensions are in inches and millimeters unless otherwise specified. Values in brackets are metric equivalents.

Specifications subject to change.

Technical Support Center
1-800-522-6752
www.tycoelectronics.com

Square Grid Pin Header Specifications

24 and 36 Position Headers

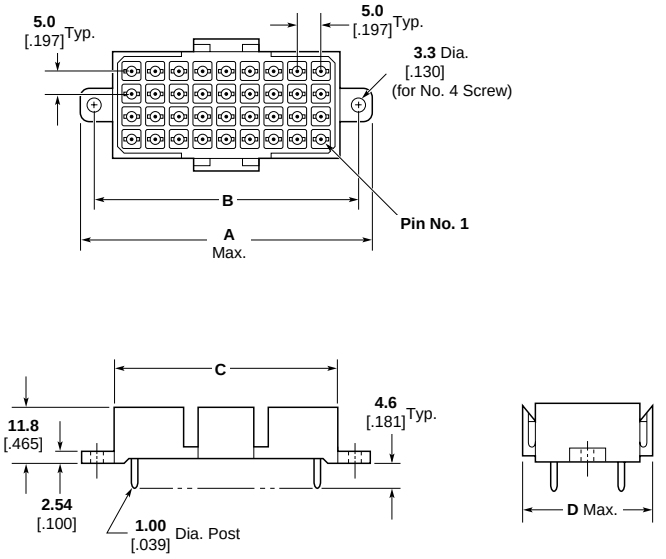

No. of Positions	Header Dimensions			
	A	B	C	D
24	**47.32** 1.863	**40.6** 1.598	**32.85** 1.293	**29.36** 1.156
36	**62.31** 2.453	**55.58** 2.188	**48.01** 1.890	**29.87** 1.176

Square Grid Socket Header Specifications

4 and 6 Position Headers

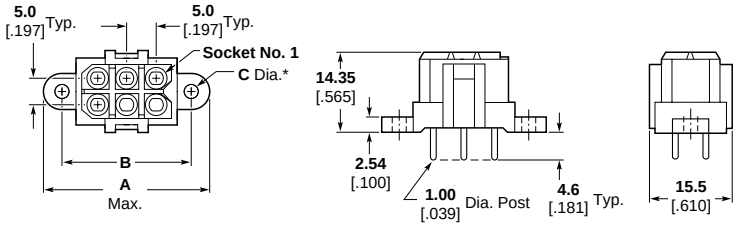

9, 12 and 18 Position Headers

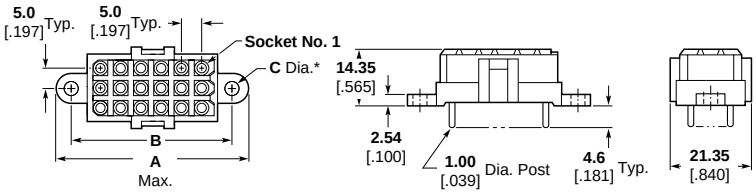

No. of Positions	Header Dimensions		
	A	B	C*
4	**22.61** .890	**17.4** .685	**2.65** .104
6	**27.69** 1.090	**22.4** .882	**2.65** .104
9	**27.69** 1.090	**22.4** .882	**2.65** .104
12	**32.5** 1.280	**27.3** 1.075	**2.65** .104
18	**47.32** 1.863	**40.6** 1.598	**3.3** .130

*__C__ Dia.—2.65 [.104] for No. 2 screw; 3.3 [.130] for No. 4 screw.

For complete product information, order Catalog 82045

Square Grid Socket Header Specifications

24 and 36 Position Headers

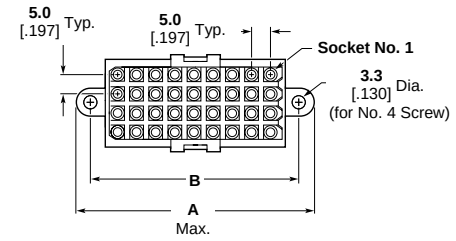

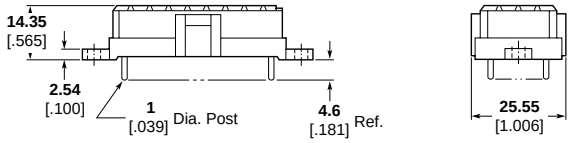

No. of Positions	Header Dimensions	
	A	B
24	**47.32** 1.863	**40.6** 1.598
36	**62.31** 2.453	**55.58** 2.188

In-Line Connectors, 5 [.197] Centerline

Free-Hanging Connectors

Material:

Red thermoplastic, 94V-0 rated

Related Product Data:

Mateable Connectors:

PC Board Mount Headers—page 9244

Contacts—pages 9101-9103, 9109, 9116, 9117

Keying Plug—page 9247

Dimensional Specifications— page 9243

Performance Characteristics— page 9223

Technical Documents:

Product Specification 108-10033

Application Specification 114-10040

Plug Housing
(Accepts Socket Contacts)

Receptacle Housing
(Accepts Pin Contacts)

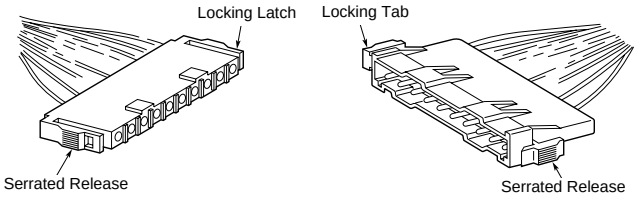

No. of Positions	Housing Part Numbers*	
	Plug	Receptacle
1 (Positive Latch)	207535-1**	207535-1**
1 (Breakaway Latch)	211076-1**	211076-1**
3	207360-1	207359-1
6	207377-1	207376-1
10	207396-1	207397-1
16	207542-1	207543-1

*Housing only, **order contacts separately.**
**Hermaphroditic housing accepts pins or sockets and mates with itself.

1 Position Housing
(Hermaphroditic Housing
Accepts Pins or Sockets and
Mates With Itself)

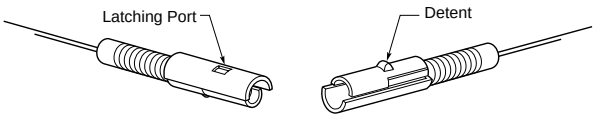

For complete product information, order Catalog 82045

Products for Industrial & Commercial Applications
Dimensions are shown for reference purposes only.
Dimensions are in inches and millimeters unless otherwise specified. Values in brackets are metric equivalents.
Specifications subject to change.
Technical Support Center 1-800-522-6752 www.tycoelectronics.com

In-Line Connector Specifications, 5 [.197] Centerline

Single Position Hermaphroditic Housings

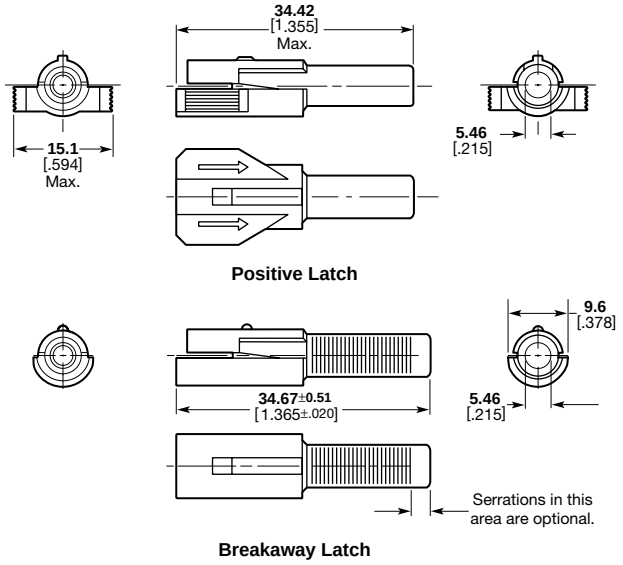

6, 10 and 16 Position Housings

Plug (for Sockets)

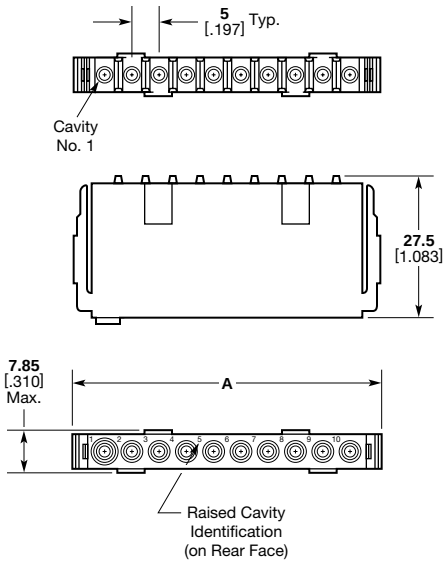

3 Position Housings

Plug (for Sockets)

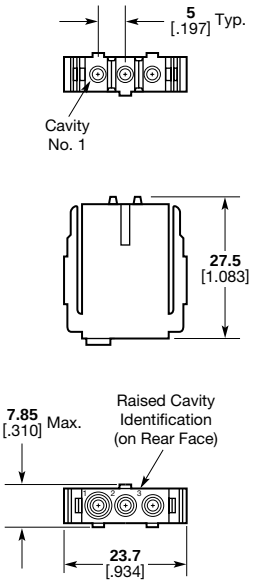

Receptacle (for Pins)

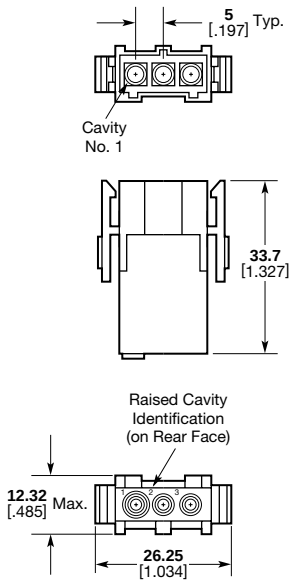

Receptacle (for Pins)

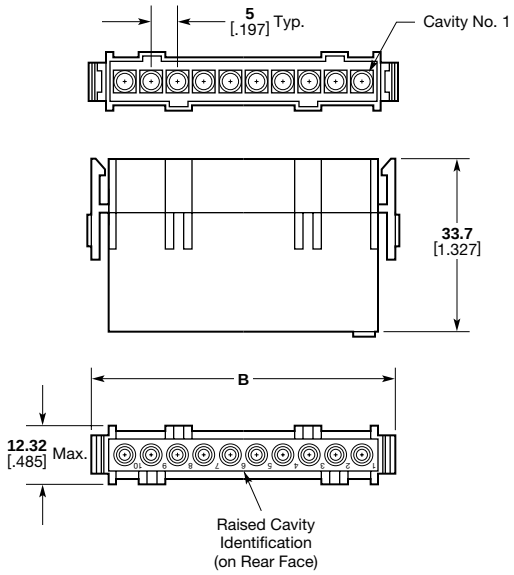

No. of Positions	Dimensions	
	A	B
6	**38.7** 1.524	**41.3** 1.625
10	**58.7** 2.312	**61.3** 2.413
16	**89.79*** 3.535	**91.19** 3.59

*__A__ Dim. is Max. for 16-position housing.

For complete product information, order Catalog 82045

Products for Industrial & Commercial Applications

Dimensions are shown for reference purposes only.

Dimensions are in inches and millimeters unless otherwise specified. Values in brackets are metric equivalents.

Specifications subject to change.

Technical Support Center
1-800-522-6752
www.tycoelectronics.com

In-Line Connectors

PC Board Mount Headers

Material and Finish:

Housing—Red thermoplastic, 94V-0 rated

Pin Contacts—Copper alloy, plated tin or gold duplex

Socket Contacts—Phosphor bronze, plated tin or gold duplex

Related Product Data:

Mateable Connectors:

Free-Hanging Connectors—page 9242 (Pin and Socket Headers do not mate.)

Dimensional Specifications— pages 9245 and 9246

Performance Characteristics— page 9223

Technical Documents:

Product Specification
108-10033

Application Specification
114-10040

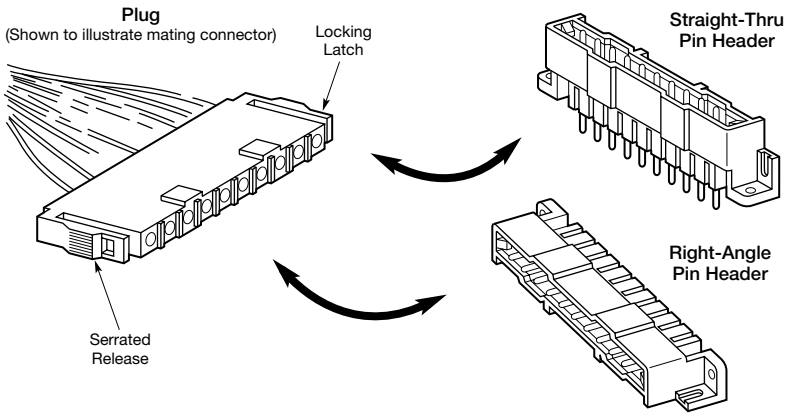

No. of Positions	Contact Plating	Pin Header Part Numbers		Mates with Plug Part Numbers (Page 9242)
		Straight-Thru	Right-Angle	
3	Tin	207365-1	207541-1	207360-1
	Gold*	207365-3	207541-3	
6	Tin	207583-1	207378-1	207377-1
	Gold*	207583-3	207378-3	
10	Tin	207584-1	207398-1	207396-1
	Gold*	207584-3	207398-3	
16	Tin	207599-1	207544-1	207542-1
	Gold*	207599-3	207544-3	

*Duplex plated 0.00076 [.000030] gold on mating end, tin-lead on termination end, with entire contact nickel underplated.
Note: Pin and Socket Headers do not mate.

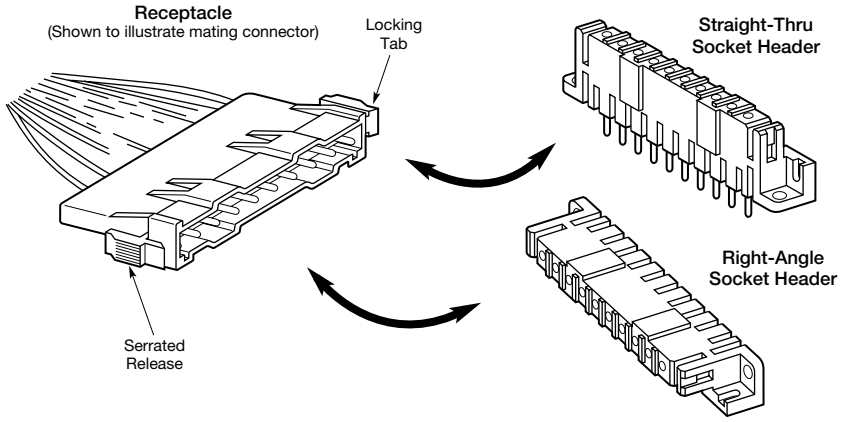

No. of Positions	Contact Plating	Socket Header Part No.		Mates with Receptacle Part Numbers (Page 9242)
		Straight-Thru	Right-Angle	
3	Tin	207609-1	207608-1	207359-1
	Gold*	207609-3	207608-3	
6	Tin	207611-1	207610-1	207376-1
	Gold*	207611-3	207610-3	
10	Tin	207613-1	207612-1	207397-1
	Gold*	207613-3	207612-3	
16	Tin	207615-1	207614-1	207543-1
	Gold*	207615-3	207614-3	

*Duplex plated 0.00076 [.000030] gold on mating end, tin-lead on termination end, with entire contact nickel underplated.
Note: Pin and Socket Headers do not mate.

For complete product information, order Catalog 82045

In-Line Pin Header Specifications, 5 [.197] Centerline

Straight-Thru

3 Position Header

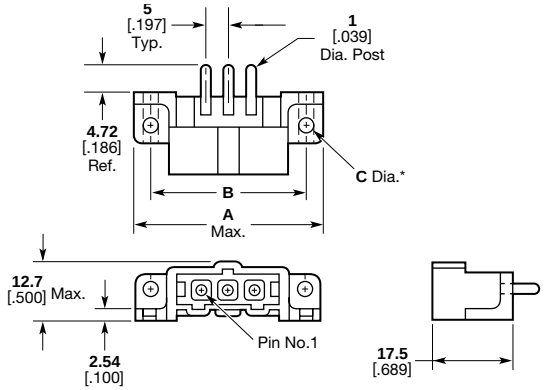

6, 10 and 16 Position Headers

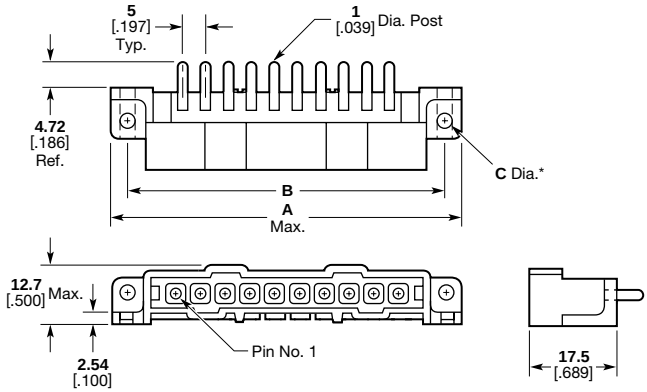

Right-Angle

3 Position Header

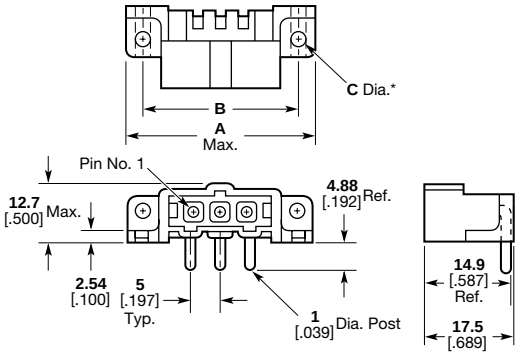

6, 10 and 16 Position Headers

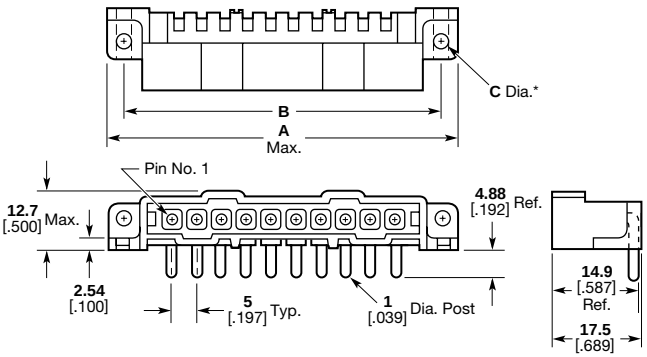

No. of Positions	Header Dimensions		
	A	B	C*
3	**36.86** 1.451	**31.6** 1.244	**2.65** .104
6	**51.87** 2.042	**46.6** 1.834	**2.65** .104
10	**71.86** 2.829	**66.6** 2.622	**2.85** .112
16	**102.64** 4.041	**96.6** 3.803	**2.85** .112

*__C__ Dia.—2.65 [.104] for No. 2 screw; 2.85 [.112] for No. 3 screw.

In-Line Socket Header Specifications, 5 [.197] Centerline

Straight-Thru

3 Position Header

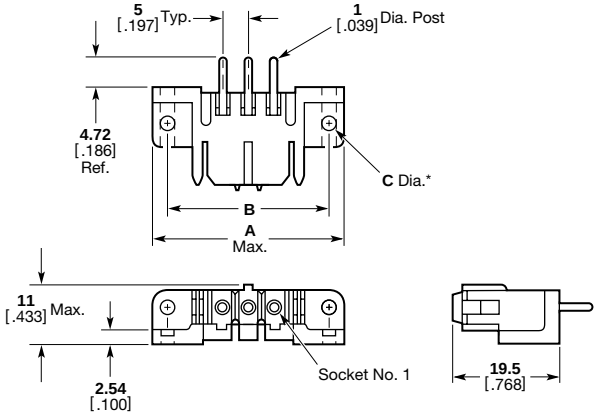

6, 10 and 16 Position Headers

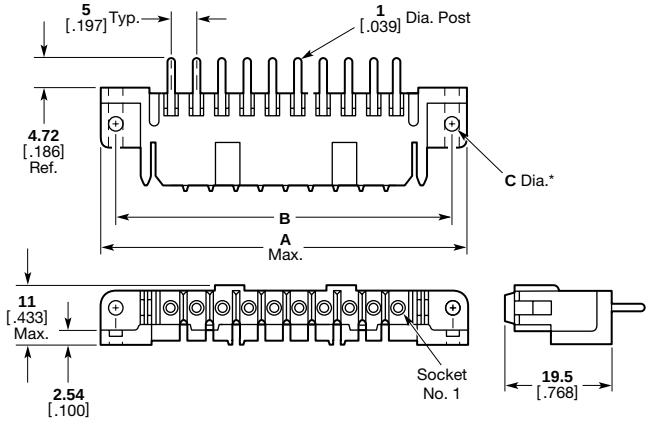

Right-Angle

3 Position Header

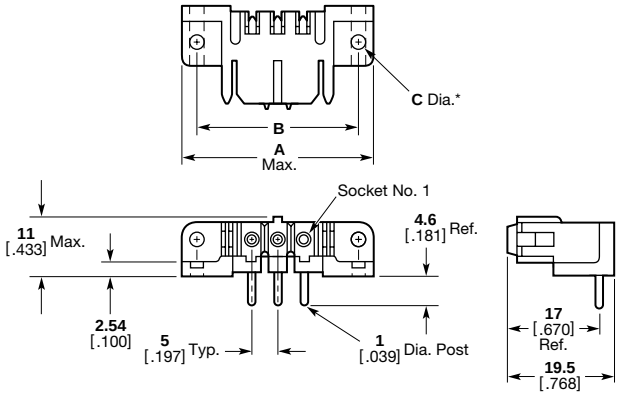

6, 10 and 16 Position Headers

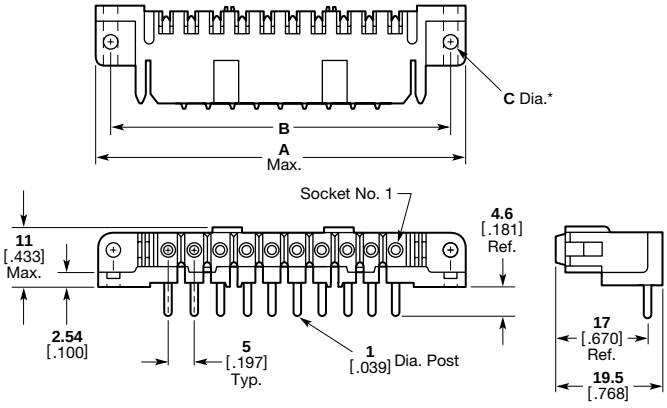

No. of Positions	Header Dimensions		
	A	B	C*
3	**36.55** 1.439	**31.6** 1.244	**2.65** .104
6	**51.59** 2.031	**46.6** 1.834	**2.65** .104
10	**71.6** 2.819	**66.6** 2.622	**2.85** .112
16	**101.78** 4.007	**96.6** 3.803	**2.85** .112

*__C__ Dia.—2.65 [.104] for No. 2 screw; 2.85 [.112] for No. 3 screw.

For complete product information, order Catalog 82045

Products for Industrial & Commercial Applications

Dimensions are shown for reference purposes only.

Dimensions are in inches and millimeters unless otherwise specified. Values in brackets are metric equivalents.

Specifications subject to change.

Technical Support Center
1-800-522-6752
www.tycoelectronics.com

In-Line Connectors, 5.08 [.200] Centerline

Free-Hanging Connectors and PC Board Mount Headers

Material and Finish:

Connector:
Red thermoplastic, 94V-0 rated

Header:

Housing—Red thermoplastic, 94V-0 rated

Contact—Copper alloy, plated tin or gold duplex

Related Product Data:

Contacts—pages 9101-9103, 9109, 9116, 9117

Keying Plug—See Below

Dimensional Specifications— pages 9248 and 9249

Performance Characteristics— page 9223

Plug Housing
(Accepts Socket Contacts)

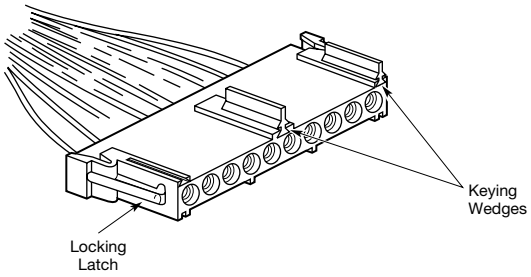

Right-Angle Pin Header

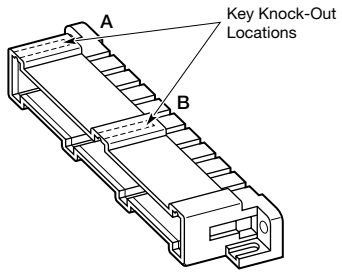

No. of Positions	In-Line Connector Plug Part No.*	Right-Angle Pin Header		
		Contact Plating	Standard Part Numbers	Keyed Part Numbers
6	208117-1	Tin	208116-1***	—
10	208404-1	Tin	208403-1	1-208403-1[1] 2-208403-1[2]
19	208100-1	Tin	208099-1	—
		Gold**	212630-1	—

*Housing only, **order contacts separately.**
**Duplex plated 0.00076 [.000030] gold on mating end, tin-lead on termination end, with entire contact nickel underplated.
***Longer tail version also available.
[1]Location A knocked out.
[2]Location B knocked out.

Keying Wedge

Part Number 208400-1

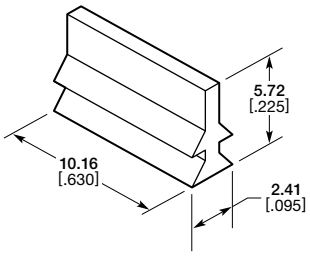

Keying Plugs

Keying Plugs
(for use with all types)

Material:
Nylon

Related Product Data:

Used with:

Square Grid Connectors— pages 9236 and 9239

In-Line Connectors—pages 9242 and 9244

Drawer Connectors—pages 9226 and 9227

For Plug Housings

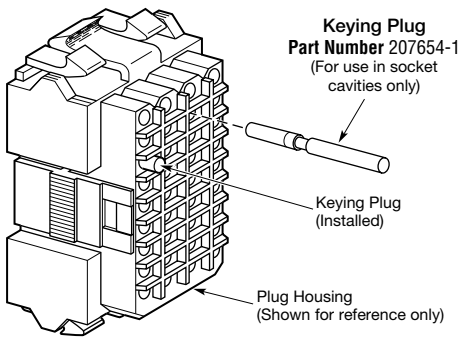

For Socket Headers

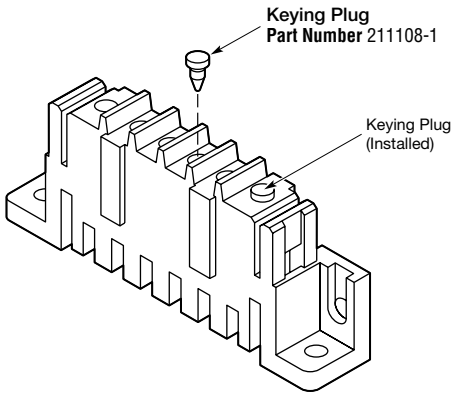

For complete product information, order Catalog 82045

In-Line Connectors, 5.08 [.200] Centerline Specifications

6 Position Plug Housing
(for Sockets)

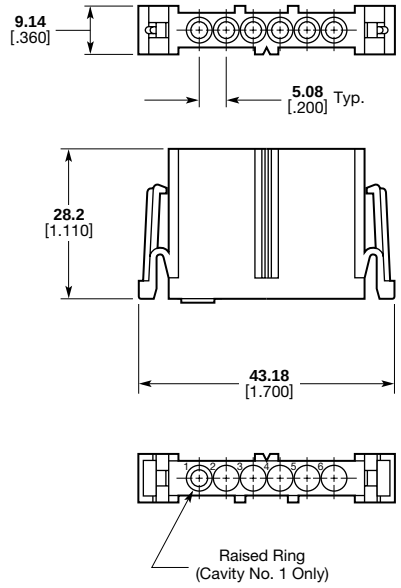

10 Position Plug Housing
(for Sockets)

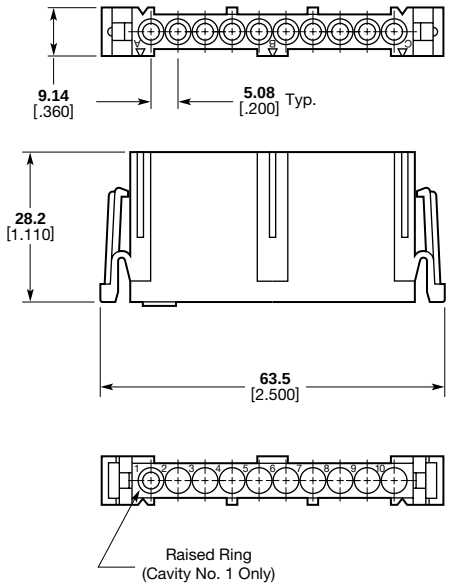

19 Position Plug Housing
(for Sockets)

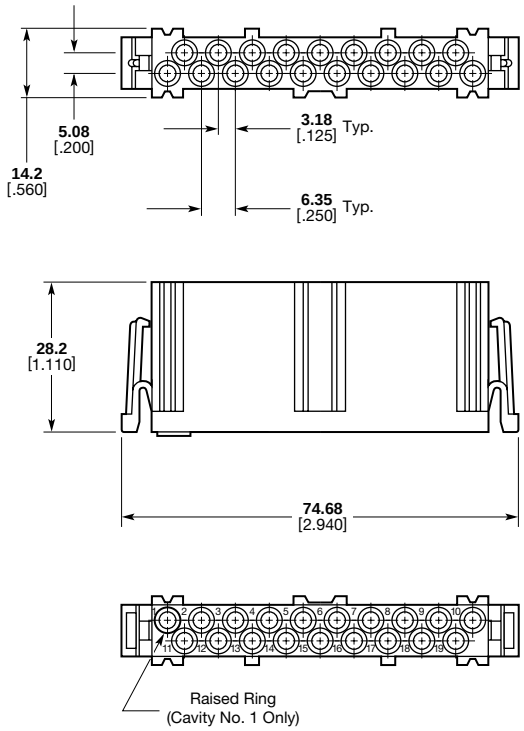

For complete product information, order Catalog 82045

Products for Industrial & Commercial Applications
Dimensions are shown for reference purposes only.
Dimensions are in inches and millimeters unless otherwise specified. Values in brackets are metric equivalents.
Specifications subject to change.
Technical Support Center
1-800-522-6752
www.tycoelectronics.com

In-Line Right-Angle Pin Headers, 5.08 [.200] Centerline Specifications

6 Position Header

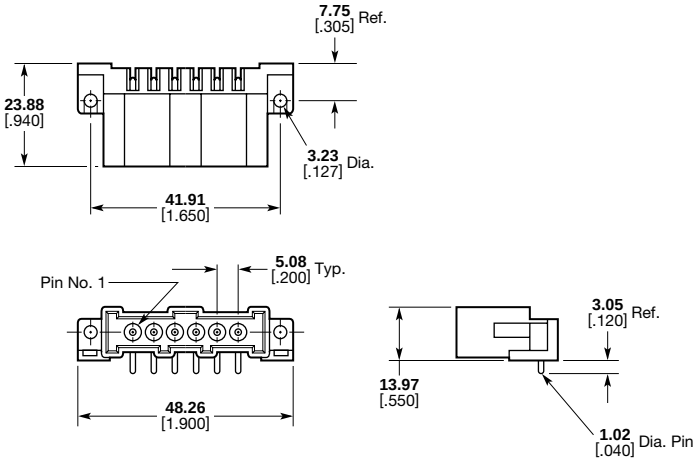

10 Position Header

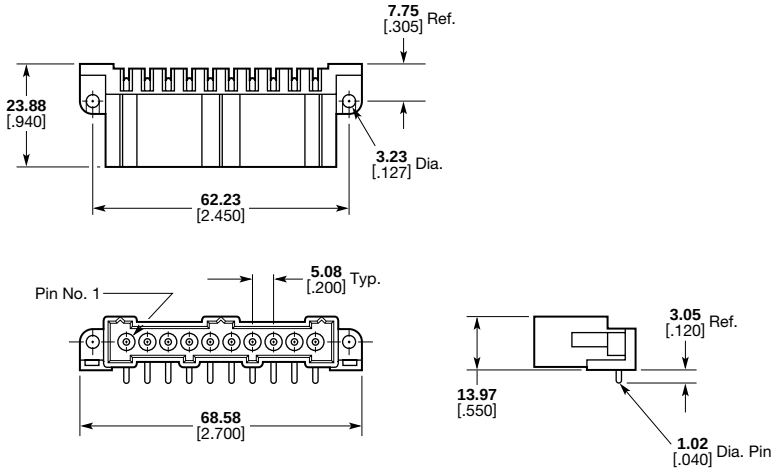

19 Position Header

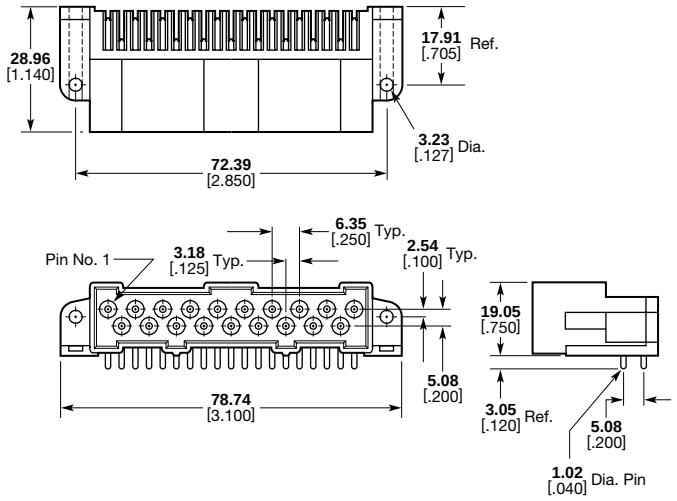

For complete product information, order Catalog 82045

Products for Industrial & Commercial Applications
Dimensions are shown for reference purposes only.
Dimensions are in inches and millimeters unless otherwise specified. Values in brackets are metric equivalents.
Specifications subject to change.
Technical Support Center
1-800-522-6752
www.tycoelectronics.com

Rectangular Connectors

62-Position Rectangular Connector (Panel Mount)

Material:

Black thermoplastic, 94V-0 rated

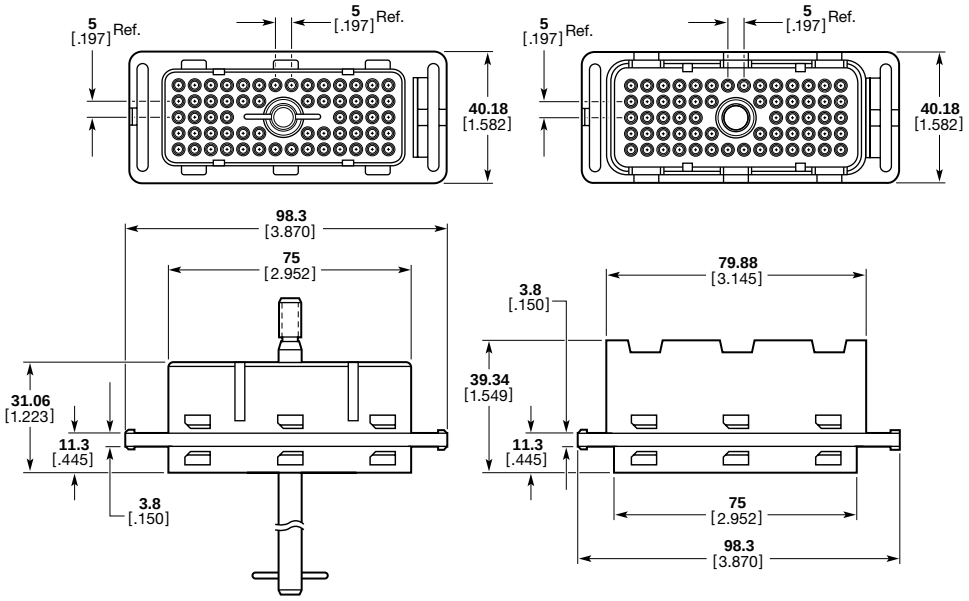

Plug **Receptacle**

Rectangular Connectors

Mating Half	With Male Jackscrew	With Female Jackscrew Threads	Header
Plug	208334-4[1]	208627-1[2]	211580-2
Receptacle	208628-1	208333-1	211580-2 211580-3

[1] Mates with Part Number 211580-2 or 211580-3.
[2] Mates with Part Number 208628-1.

Note: Housings shown with jackscrew in plug and female jackscrew threads in receptacle. Either half can be equipped with female jackscrew threads or jackscrew as necessary.

Rectangular Connectors

Strain Relief Kit (for Rectangular Connectors, 62 Position)

Material:

Red thermoplastic, 94V-0 rated

Related Product Data:

Mateable Connectors—page 9250
Keying Plug—page 9247
Performance Characteristics— page 9223

Technical Documents:

Product Specification
108-10033
Application Specification
114-10040

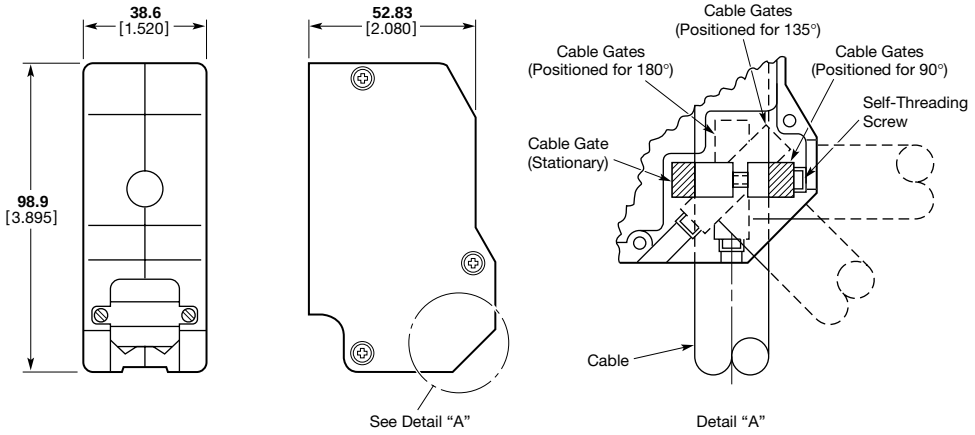

Part Number 208335-1
(for Plug or Receptacle)

62 Position PC Pin Headers

(Mate with Plug Part Number 208334-4**)**

Material:

Housing—Polyester, black
Contacts—Brass (211580) or phosphor bronze (213788)

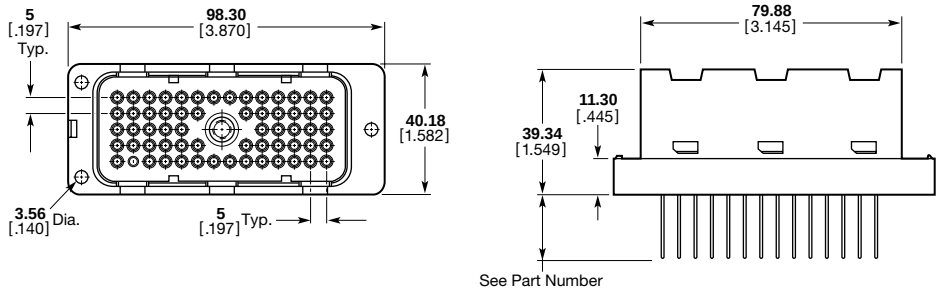

Part Number 211580-2 with 19.76 [.778] Posts
Part Number 211580-3 with 3.56 [.140] Posts

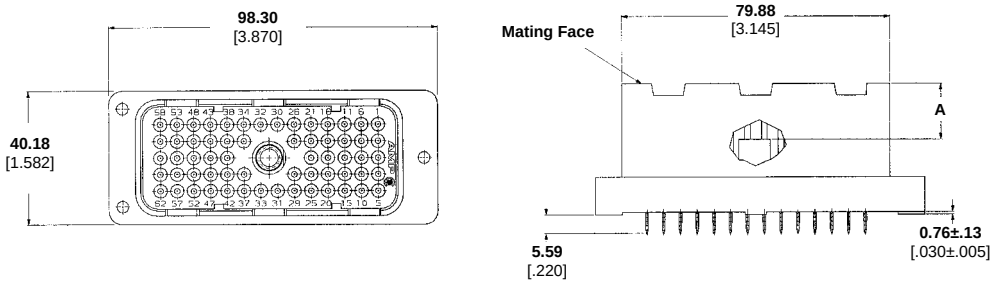

Part Number 213788-2
with ACTION PIN Posts

For complete product information, order Catalog 82045

Products for Industrial & Commercial Applications
Dimensions are shown for reference purposes only.
Dimensions are in inches and millimeters unless otherwise specified. Values in brackets are metric equivalents.
Specifications subject to change.
Technical Support Center
1-800-522-6752
www.tycoelectronics.com

Commoning Connectors

Product Facts

- **36-circuit commoning system**
- **Choice of bussing configurations: full bus and split bus of 8-8-8-8-4. Other arrangements are available, consult Tyco Electronics**
- **Compact design: 95.1 [3.744] x 33 [1.300]**
- **Mounts onto machine frame and other panel areas**

Material and Finish:

Contacts—Copper alloy, tin plated

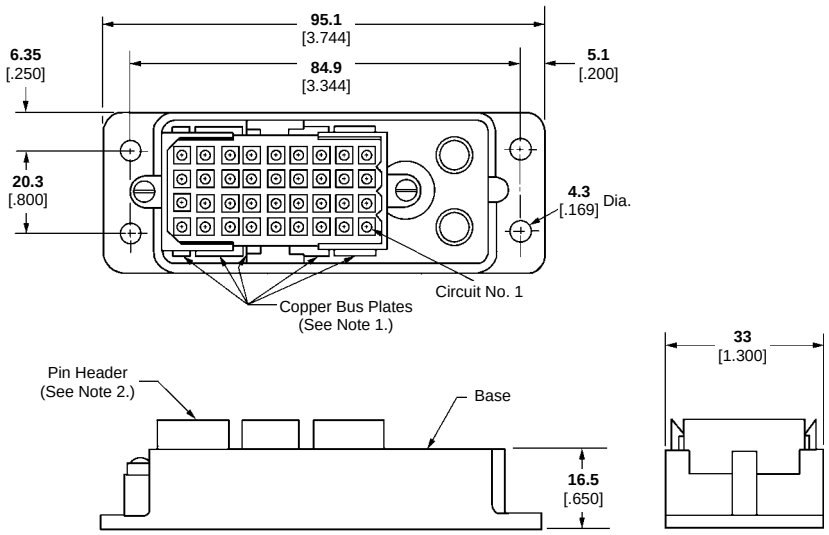

Notes: 1. See chart below for bus configurations.
2. These connectors mate with 36-circuit rectangular plug **Part Number** 207019-1 (page 9236).
3. Dimensional tolerances are not illustrated. This information is available on engineering drawings; use product part number when ordering drawings.

Bus Configuration	Commoning Arrangements	Part Numbers
Split 8-8-8-8-4	1 thru 8	208062-1
	9 thru 16	
	17 thru 24	
	25 thru 32	
	33 thru 36	
Full	All Circuits Common	208062-3

Power Distribution Connector

Product Facts

- **36-circuit power distribution system**
- **High current capability**
- **Compact design: 95.1 [3.744] x 33 [1.300]**
- **Accommodates one or two voltages (with split bus)**

Bus Configuration	Contact Plating	Connector Part Number
Full Bus	Tin	208063-1

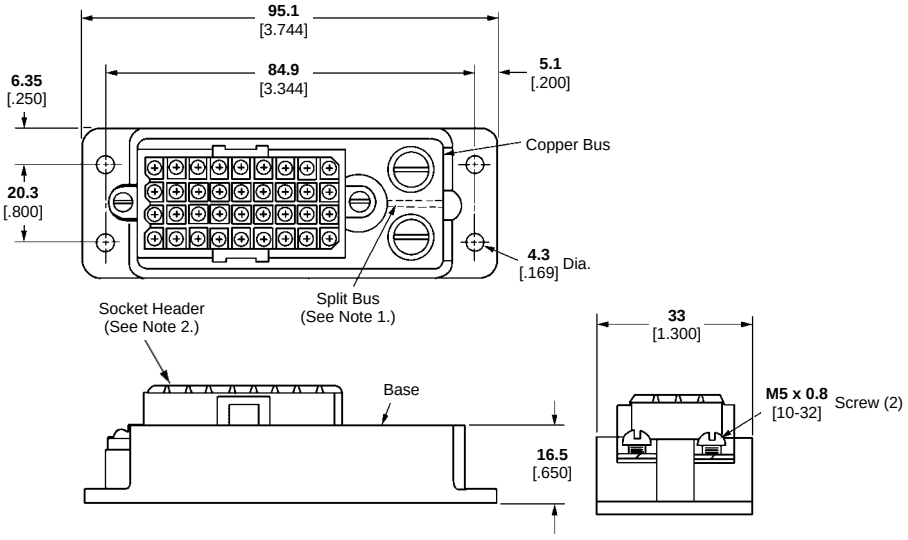

Notes: 1. Other bussing configurations can be made available, consult Tyco Electronics.
2. These connectors mate with 36-circuit rectangular receptacle **Part Number** 207020-1 (page 9236).
3. Dimensional tolerances are not illustrated. This information is available on engineering drawings; use product part number when ordering drawings.

For complete product information, order Catalog 82045

For complete product information, order Catalog 82045

Products for Industrial & Commercial Applications

Dimensions are shown for reference purposes only.

Dimensions are in inches and millimeters unless otherwise specified. Values in brackets are metric equivalents.

Specifications subject to change.

Technical Support Center
1-800-522-6752
www.tycoelectronics.com

Product Facts

- **Low cost**
- **Available in popular 1- through 9-position sizes; in free-hanging and panel-mount versions**
- **Accepts all AMP Multimate contacts with .062 [1.57] pin diameter: Type III+ and subminiature coaxial contacts**
- **No mating hardware required**
- **Housings provide positive latching and polarization**
- **Discrete wire seals are factory installed, but replaceable**
- **Square flange design permits bulkhead mounting**
- **Easy contact insertion and extraction; no special fixturing required**
- **Rigid thermoplastic material is resistant to most hydrocarbons and will not flex or overstress contacts, UL 94V-2 rated**
- **Accommodates 18-14 AWG [0.8-2 mm^2] wires; .080 to .135 [2.03 to 3.43] insulation diameters**
- **Machine applied terminations provide for highest production rates at lowest applied costs**
- **Recognized under the Component Program of Underwriters Laboratories Inc., File No. E28476**
- **Produced under a Quality Management System certified to ISO 9001**

ISO 9001 Certified

A copy of the certificate is available upon request

Technical Documents:

Product Specifications
108-10030—Connectors
108-10028—Contacts

Technical Report
P207-78—Versatility in a Sealed Connector

Instruction Sheet
408-7900—Econoseal Connectors



AMP Econoseal Connectors fill a growing need for small, inexpensive sealed circular connectors, especially for the automotive, trucking, RV (recreational vehicle) and off-road equipment industries. They eliminate many problems inherent to soft rubber sealed connectors, such as difficulty in assembly, electrical failures due to flexing, and difficulty in mating and unmating.

For optimum versatility, Econoseal Connectors employ Multimate contact cavities, offering a choice of reliable AMP Multimate Type III+ contacts for single-conductor wire and AMP subminiature COAXICON contacts for coaxial terminations.

Connectors are available in a wide range of popular sizes, from 1 to 9 positions, and with housing styles for free-hanging and panel-mount applications. Both the front and back of the housing have numbered contact cavities. Plug housings feature a retention ring with gripping ribs, a shallow mating face, conductor seals, as well as a sealing rim. Receptacle housings have two locking tabs, polarizing slots, a deep mating face, conductor seals and a peripheral sealing ring.

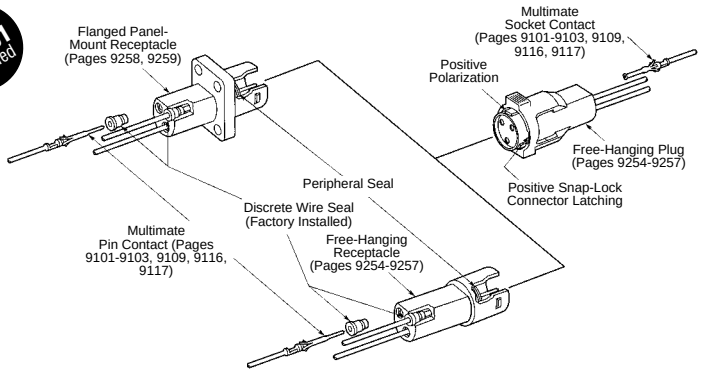

Performance Characteristics:

Raintightness — 75 megohms min. insulation resistance per UL 514

Insulation Resistance — 75 meoghms (min.)

Dielectric Withstanding Voltage (High Potential) — 1200 volts, rms

Operating Temperature Range — -55°C to +105°C

Contact Retention — 10 lb [44 N] min.

Contact Durability — 500 cycles*, mating and unmating

Housing Durability — 50 cycles, mating and unmating

Maintenance Aging — Contacts and wire seals removed and reinserted 5 times

Vibration — 10 to 500 Hz

Mechanical Shock — 50 Gs

Thermal Shock — 10 cycles, -55°C to +105°C

Temperature Life — 200 hr. @ 105°C

Fluid Resistance — Gasoline, diesel fuel, motor oil, antifreeze coolant, brake fluid and transmission fluid.

*500 cycles with gold plated contacts; 250 cycles with tin plated contacts.

Material Specifications:

Housings — Thermoplastic, black

Discrete Wire Seals and Peripheral Seals — Elastomer, black

For complete product information, order Catalog 82057

Free-Hanging Connectors

Single Circuit Housings

Plug

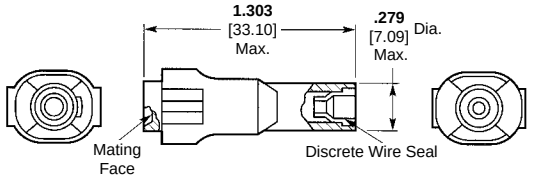

Receptacle

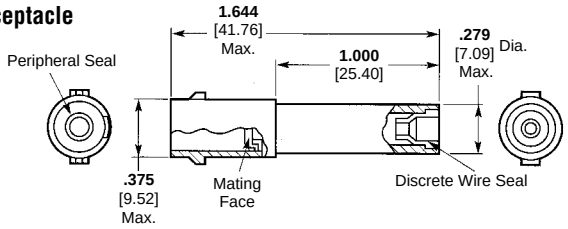

2- and 3-Circuit Housings

Plug

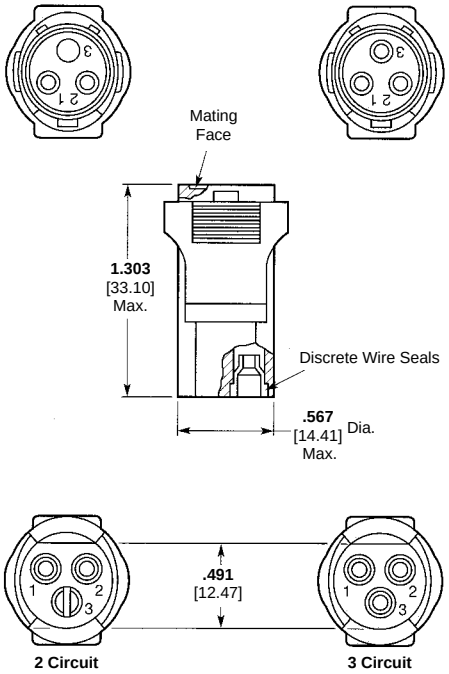

Receptacle

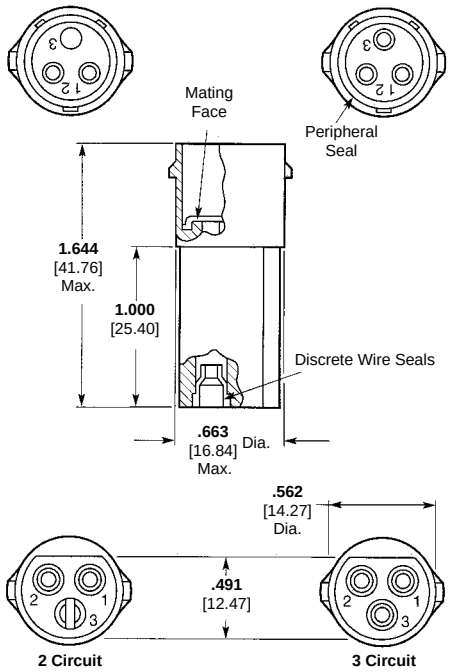

Notes:
1. Housing material is black thermoplastic.
2. Plugs accept socket contacts; receptacles accept pin contacts. **All contacts must be purchased separately: Multimate Contacts** Type III+ (18-14 AWG)—pages 9101-9103, 9109 Subminiature Coaxial—pages 9116, 9117
3. Discrete wire seals are factory installed, but can be replaced. Use **Part Number 207565-2** when ordering individual discrete wire seals.

No. of Positions	Plug Part Numbers	Receptacle Part Numbers	Plug also Mates with Flanged Receptacle Part Numbers
1	207901-1	207902-1	207982-1 (page 9258)
2	207845-1	207846-1	207853-1 (page 9258)
3	207567-1	207563-1	207807-1 (page 9258)

For complete product information, order Catalog 82057

Products for Industrial & Commercial Applications
Dimensions are shown for reference purposes only.
Dimensions are in inches and millimeters unless otherwise specified. Values in brackets are metric equivalents.
Specifications subject to change.
Technical Support Center
1-800-522-6752
www.tycoelectronics.com

Free-Hanging Connectors

4-Circuit Housings

Plug

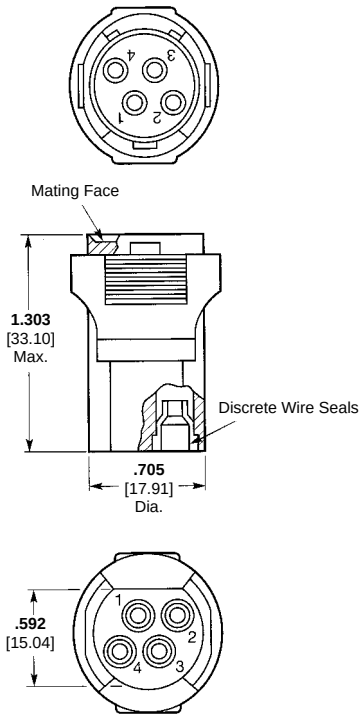

Part Number 207571-1

Receptacle

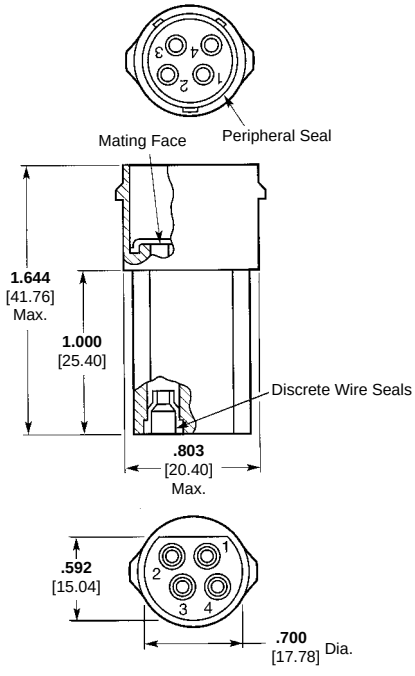

Part Number 207569-1

Notes:
1. Housing material is black thermoplastic.
2. Plugs accept socket contacts; receptacles accept pin contacts. **All contacts must be purchased separately: Multimate Contacts** Type III+ (18-14 AWG)—pages 9101-9103, 9109 Subminiature Coaxial—pages 9116, 9117
3. Discrete wire seals are factory installed, but can be replaced. Use **Part Number 207565-2** when ordering individual discrete wire seals.
4. Plug shown above also mates with flanged panel mount receptacle, Part Number 207808-1 (page 9258).

For complete product information, order Catalog 82057

Free-Hanging Connectors

5-, 6- and 7-Circuit Housings

Plug

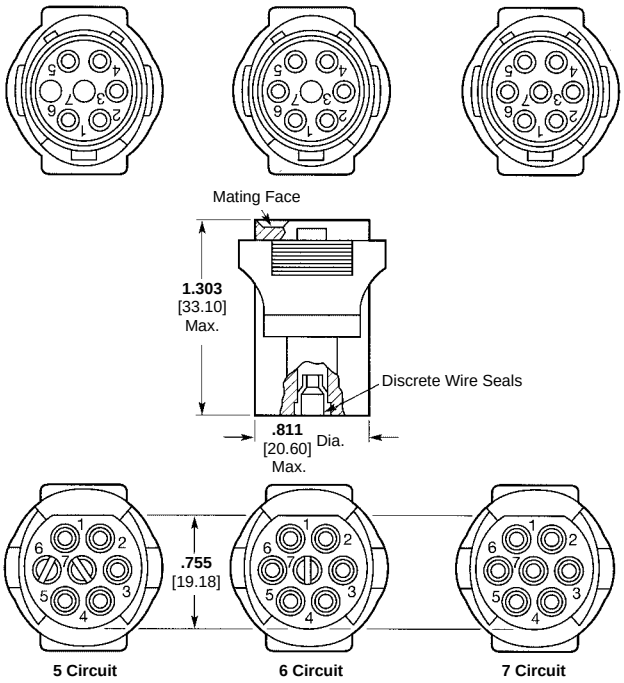

Receptacle

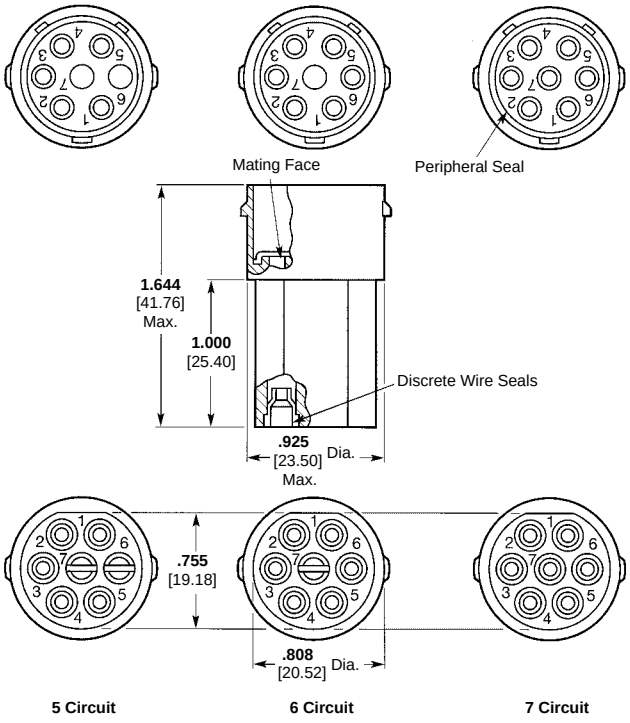

No. of Positions	Plug Part Number	Receptacle Part Number
7	207575-1	207573-1

Notes:
1. Housing material is black thermoplastic.
2. Plugs accept socket contacts; receptacles accept pin contacts. **All contacts must be purchased separately: Multimate Contacts**
   Type III+ (18-14 AWG)—pages 9101-9103, 9109
   Subminiature Coaxial—pages 9116, 9117
3. Discrete wire seals are factory installed, but can be replaced. Use **Part Number 207565-2** when ordering individual discrete wire seals.

For complete product information, order Catalog 82057

Products for Industrial & Commercial Applications
Dimensions are shown for reference purposes only.
Dimensions are in inches and millimeters unless otherwise specified. Values in brackets are metric equivalents.
Specifications subject to change.
Technical Support Center
1-800-522-6752
www.tycoelectronics.com

Free-Hanging Connectors

8- and 9-Circuit Housings

Plug

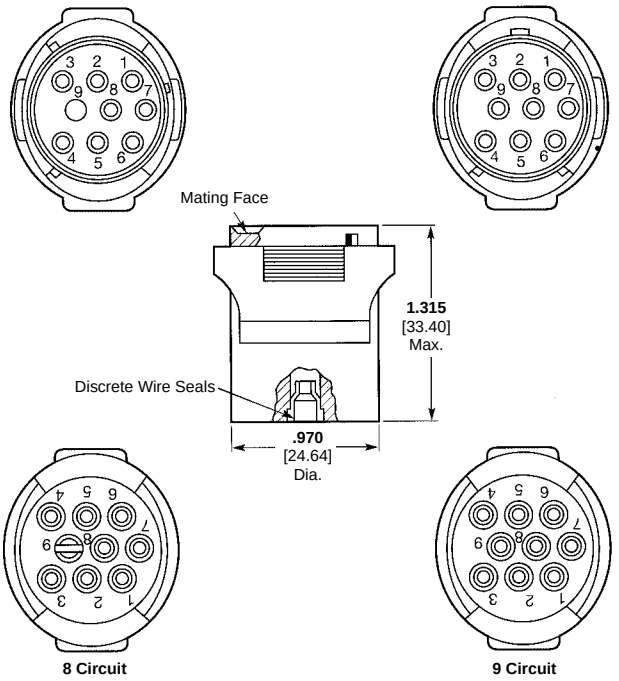

Receptacle

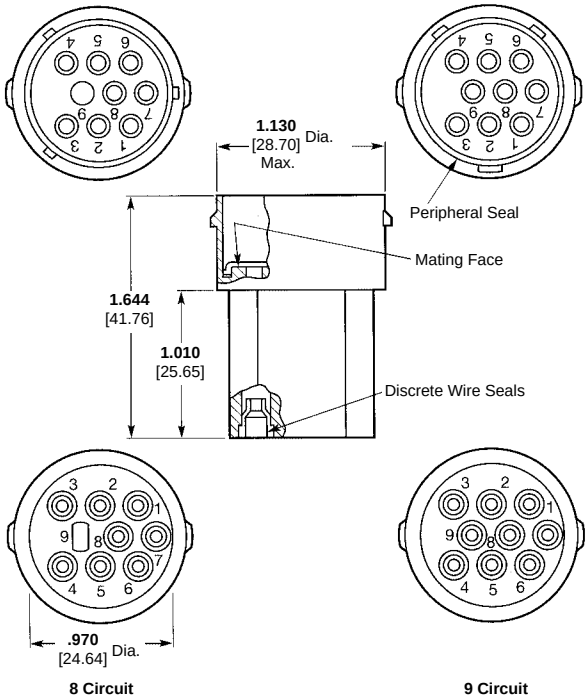

No. of Positions	Plug Part Numbers	Receptacle Part Numbers	Plug also Mates with Flanged Receptacle Part Numbers
8	208678-1	211068-1	208677-1 (page 9259)
9	208530-1	208538-1	208546-1 (page 9259)

For complete product information, order Catalog 82057

Notes:
1. Housing material is black thermoplastic.
2. Plugs accept socket contacts; receptacles accept pin contacts. **All contacts must be purchased separately: Multimate Contacts**
   Type III+ (18-14 AWG)—pages 9101-9103, 9109
   Subminiature Coaxial—pages 9116, 9117
3. Discrete wire seals are factory installed, but can be replaced. Use **Part Number 207565-2** when ordering individual discrete wire seals.

Products for Industrial & Commercial Applications
Dimensions are shown for reference purposes only.
Dimensions are in inches and millimeters unless otherwise specified. Values in brackets are metric equivalents.
Specifications subject to change.
Technical Support Center
1-800-522-6752
www.tycoelectronics.com

Flanged Connectors — Panel Mount

Single Circuit Receptacle Housing

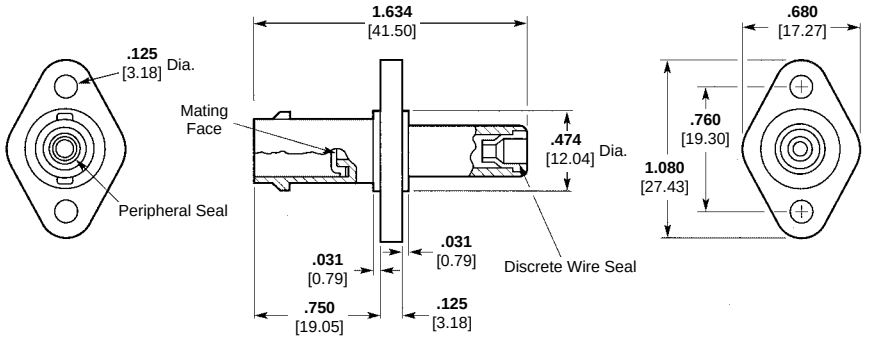

2- and 3-Circuit Receptacle Housings

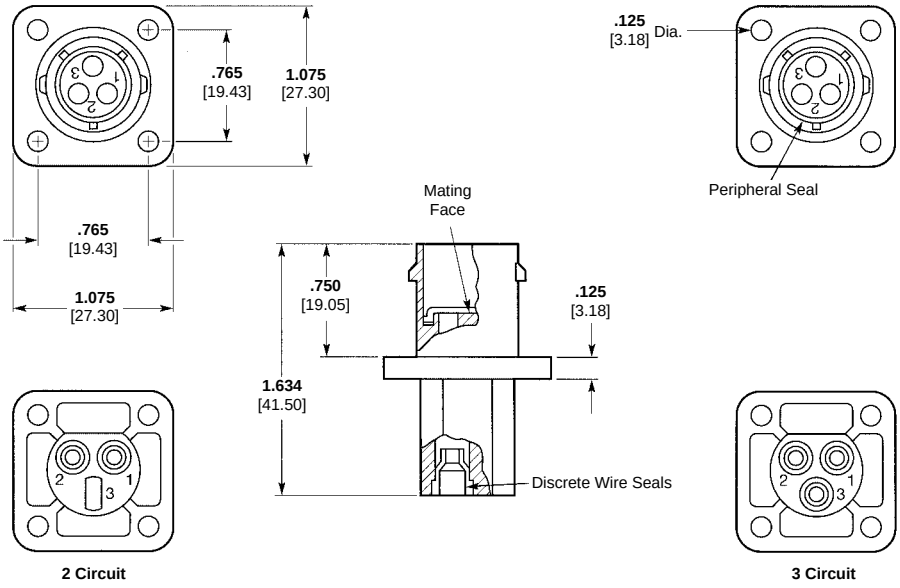

4-Circuit Receptacle Housing

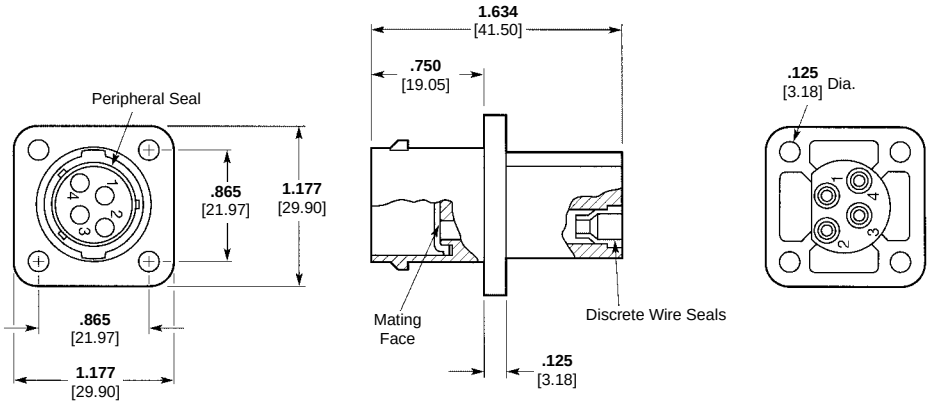

Notes:
1. Housing material is black thermoplastic.
2. Housings shown above accept pin contacts. **All contacts may be purchased separately:**
   Multimate Contacts
   Type III+ (18-14 AWG)—pages 9101-9103, 9109
   Subminiature Coaxial—pages 9116, 9117
3. Discrete wire seals are factory installed, but can be replaced. Use **Part Number 207565-2** when ordering individual discrete wire seals.

No. of Positions	Flanged Receptacle Part Numbers	Flanged Receptacle Mates with Plug Part Numbers
1	207982-1	207901-1 (page 9254)
2	207853-1	207845-1 (page 9254)
3	207807-1	207567-1 (page 9254)
4	207808-1	207571-1 (page 9255)

For complete product information, order Catalog 82057

Products for Industrial & Commercial Applications
Dimensions are shown for reference purposes only.
Dimensions are in inches and millimeters unless otherwise specified. Values in brackets are metric equivalents.
Specifications subject to change.
Technical Support Center
1-800-522-6752
www.tycoelectronics.com

Flanged Connectors — Panel Mount

8- and 9-Circuit Receptacle Housings

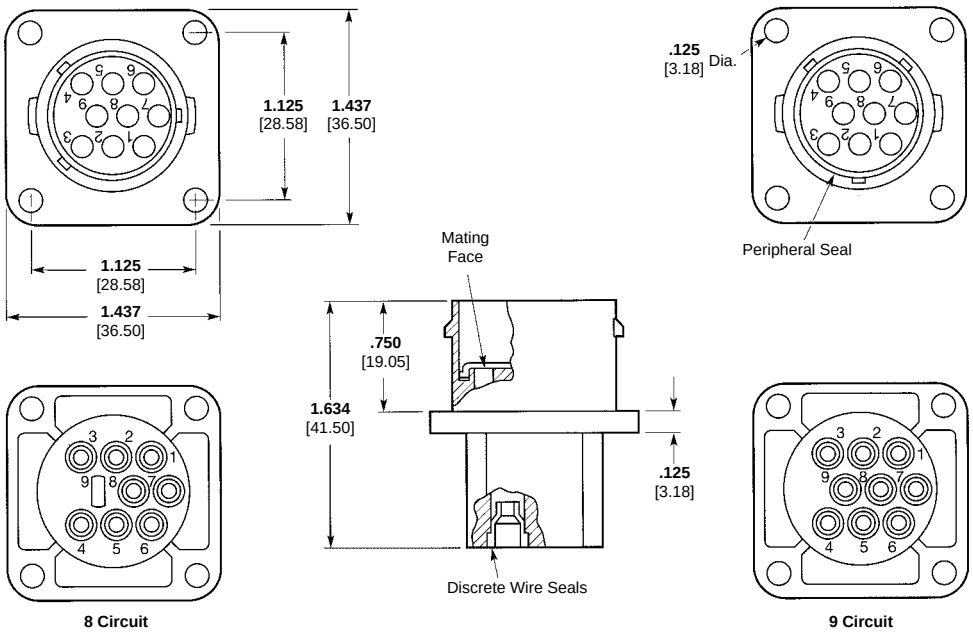

Notes:
1. Housing material is black thermoplastic.
2. Plugs accept socket contacts; receptacles accept pin contacts. **All contacts may be purchased separately:**
   Multimate Contacts
   Type III+ (18-14 AWG)—pages 9101-9103, 9109
   Subminiature Coaxial—pages 9116, 9117
3. Discrete wire seals are factory installed, but can be replaced. Use **Part Number 207565-2** when ordering individual discrete wire seals.

No. of Positions	Flanged Receptacle Part Numbers	Flanged Receptacle Mates with Plug Part Numbers
8	208677-1	208678-1 (page 9257)
9	208546-1	208530-1 (page 9257)

Assembly Accessories

Seal Protectors

Recommended to aid contact insertion through the wire entry seal. They are reusable.

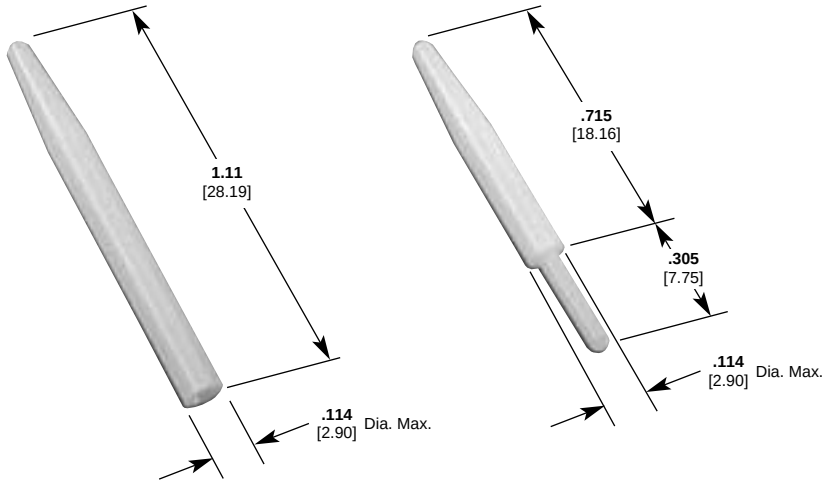

Part Number 208337-1
Insert Pins

Part Number 208338-1
Insert Sockets

For complete product information, order Catalog 82057

Products for Industrial & Commercial Applications
Dimensions are shown for reference purposes only.
Dimensions are in inches and millimeters unless otherwise specified. Values in brackets are metric equivalents.
Specifications subject to change.
Technical Support Center
1-800-522-6752
www.tycoelectronics.com

Engineering Notes

Products for Industrial & Commercial Applications
Dimensions are shown for reference purposes only.
Dimensions are in inches and millimeters unless otherwise specified. Values in brackets are metric equivalents.
Specifications subject to change.
Technical Support Center
1-800-522-6752
www.tycoelectronics.com

Table of Contents

Connector Types 10002

Connector Selection Guide 10003

Miniature Connectors
- BNC Connectors 10004-10018
- TNC Connectors 10019-10026
- Decoupled Connectors 10027
- Self-Terminating PC Board Connectors 10028
- Twin BNC Connectors 10029
- N Series Connectors 10030-10034
- F Series and G Series Connectors 10035

Subminiature Connectors
- SMA Connectors 10036-10049
- SMB Connectors 10050-10061
- MCX Connectors 10062
- Blind Mate Connectors 10063
  - OSP Miniature Blind Mate Connectors 10064
  - OSSP Subminiature Modular Blind Mate Connectors 10065
- OSMP Push-On Connectors 10066

Micro Miniature Connectors
- OSMT Surface Mount Connectors.....10067
- SMT I QuickGrip Connectors 10068
- MMCX Connectors 10069
- MICRODOT Coaxial Connectors 10070,10071

Between Series Adapters 10072,10073

Application Tooling 10074-10076

Products for Industrial & Commercial Applications

Dimensions are shown for reference purposes only.

Dimensions are in inches and millimeters unless otherwise specified. Values in brackets are metric equivalents.

Specifications subject to change.

Technical Support Center
1-800-522-6752
www.tycoelectronics.com

BNC connectors offer easy engagement and disengagement using bayonet couplings and overlapping dielectrics. They are most useful for frequently coupled and uncoupled RF connections with frequencies below 4 GHz. BNC connectors find applications in flexible networks, instrumentation, and computer peripheral interconnections.

TNC connectors have an interface similar to BNC except for a threaded coupling nut. The tighter fit provided by this screw-on connection improves interface control allowing connectors to operate up to 11 GHz. TNC connectors are excellent for mobile units or aircraft where top-notch performance is required under vibration.

F & G Series connectors offer enhanced performance beyond 1 GHz. Designed to meet the rigorous requirements of Bellcore TA-NWT-001503 and SCTE specifications, the F & G series provides high current carrying capabilities in both sealed and un-sealed configurations. Plugs, jacks and adapters are available in threaded and push-on versions. These connectors meet the evolving needs of the communications industry for increased reliability and performance.

SMB connectors feature a snap coupling for fast connection. A self centering outer spring and overlapping dielectric allows easy snap-on and excellent performance even in moderate vibration. The SMB is smaller in size than the SMA and excellent where engineers are concerned about circuit miniaturization. Typical application is inter- or intra-board connection of RF or digital signals. Commercial 50 ohm versions operate to 4 GHz, and 75 ohm versions reach 2 GHz.

SMA threaded connectors are widely used in avionics, radar and microwave communications and instrumentation. Connectors operate to at least 12.4 GHz on flexible coax cables, and up to 26.5 GHz on semi-rigid coax cables. Crimp-on SMA connectors that operate to 26.5 GHz are available.

MCX connectors offer a high reliability, space saving sub-miniature coaxial cable to cable and cable to board interconnection system. The MCX connectors impedance types are applicable up to 6 GHz.

Blind Mate connectors operate to 22 GHz for OSP, 26.5 GHz for 3.5 mm, 28 GHz for OSSP, and 40 GHz for 2.8 mm and OSMP styles. These connectors offer easy slide-on connection and require less alignment between the cable and the equipment than other connectors with comparable band width. Blind Mate connectors are widely used as coaxial interconnects between plug-in modules and motherboards when axial and radial misalignments are necessary.

N Series threaded connectors have an air dielectric interface, are low cost and are available in 50 and 75 ohm impedance types. These connectors operate to 11 GHz and are commonly used in cable-based local-area networks (LAN's) medium power transmitters, test equipment, and base station antenna applications.

Surface Mount (SMT) connectors. The RF solution to the communication and information age. These connectors (OSMT,SSMT and SMT Quick Grip) are designed to meet the growing demand for surface mount RF connector technology. These connectors operate up to 6 GHz utilizing cable assembly design to terminate to SMT connectors. Surface mount connectors contribute to high density packaging and high volume manufacturing requirements.

Product	Nominal Impedance Ohms	Maximum Frequency GHz	Temperature Rating C	Cable Retention lb	Cable Retention [N]	Coupling Mechanism	Maximum Peak Voltage	Durability Cycles	Connector Body Finish	Page No.
BNC Single Crimp	50	2.5	-65° to +165°	60 (RG-58C/U)	266.9	Bayonet	500	500	Silver or Nickel	10004
BNC Dual Crimp	50	4	-65° to +165°	60 (RG-58C/U)	266.9	Bayonet	500	500	Silver or Nickel	10004
BNC Dual Crimp Commercial	50	4	-55° to +85°	60 (RG-58C/U)	266.9	Bayonet	500	500	Nickel	10004
BNC Hex Crimp	50	4	-55° to +85°	60 (RG-58C/U)	266.9	Bayonet	500	500	Nickel	10004
BNC Field Serviceable	50	4	-65° to +165°	40 (RG-142B/U)	177.9	Bayonet	500	500	Nickel	10004
BNC 75 Ohm	75	2	-65° to +85°	60 (RG-59B/U)	266.9	Bayonet	500	500	Nickel	10004
TNC Single Crimp	50	7	-65° to +165°	60 (RG-58C/U)	266.9	Threaded	500	500	Silver	10019
TNC Dual Crimp	50	11	-65° to +165°	60 (RG-58C/U)	266.9	Threaded	500	500	Silver or Nickel	10019
TNC Commercial	50	7	-55° to +85°	60 (RG-58C/U)	266.9	Threaded	500	500	Nickel	10019
TNC 75 Ohm	75	2	-55° to +85°	60 (RG-59B/U)	266.9	Threaded	500	500	Nickel	10019
N Series Mil Type	50	11	-65° to +165°	90 (RG-214/U)	400.3	Threaded	1000	500	Silver or Nickel	10020
N Series Commercial	50	11	-65° to +85°	90 (RG-214/U)	400.3	Threaded	1000	500	Nickel	10020
F Series	75	—	-55° to +85°	40 (Series 59, 6, 7 Single Braid)	—	Threaded (F)	500	200	Nickel	10035
G Series	75	—	-55° to +85°	40 (Series 59, 6, 7 Single Braid)	—	Push-On (G)	500	200	Nickel	10035
SMA Semi-Rigid	50	26.5	-65° to +105°	60 (RG-402/U)	266.9	Threaded	500	500	Gold or Passivated Stainless Steel	10036
SMA Flexible	50	12.4	-65° to +165°	40 (RG-58C/U)	177.9	Threaded	500	500	Gold or Passivated Stainless Steel	10036
Blind Mate 3.5 mm	50	26.5	-65° to +105°	60 (RG-402/U)	266.9	Slide-On	335	500	Passivated Stainless Steel	10062
Blind Mate 2.8 mm	50	26.5	-65° to +105°	30 (RG-405/U)	133.4	Slide-On	—	500	Gold	10062
OSP Semi-Rigid	50	22	-65° to +125°	60 (RG-402/U)	267.02	Push-On	500	5000	Gold or Passivated Stainless Steel	10063
OSP Flexible	50	12.4	-65° to +125°	40 (RG-58/U)	178	Push-On	335	5000	Gold or Passivated Stainless Steel	10063
OSSP Semi-Rigid	50	28	-65° to +125°	20 (RG-405/U)	89	Push-On	335	5000	Gold or Passivated Stainless Steel	10064
OSSP Flexible	50	—	-65° to +125°	20 (RG-316/U)	89	Push-On	250	5000	Gold or Passivated Stainless Steel	10064
SMB	50	4	-65° to +85°	20 (RG-316/U)	89	Snap-On	335	500	Nickel	10050
MCX Connectors	50	6	-65° to +165°	20 (RG-316/U)	32	Snap-On	500	500	Nickel	10062
	75	6	-65° to +165°	20 (RG-187/U)	32	Snap-On	500	500	Nickel	10062
Twin BNC	Non-constant	—	-55° to +85°	25 (RG-108/U)	111.2	Bayonet	500	200	Silver or Nickel	10029
OSMT	50	6	-40° to +105°	Omni-Flex	—	Snap-On	250	100	Gold	10067
SMT Quick Grip	50	3	-40° to +125°	Omni-Flex	—	Snap-On	250	5	Gold	10068
MMCX	50	6	-55° to +155°	10 (RG-178/U)	44.5	Snap-On	500	500	Gold	10069
OSMP	50	40	-65° to +165°	20 (RG-405/U)	89	Snap-On	500	100	Gold	10066

Product Facts

- **Bayonet lock coupling for quick connect/disconnect**
- **Various connectors available in 50 and 75 ohm versions**
- **Fully intermateable with comparable BNC UG/U connectors**
- **Full range of Hex Crimp and O Crimp Products for common coaxial cables.**
- **Low VSWR**
- **Single crimp connectors offer one crimping operation for fast application**
- **Twist-on connectors require no special tooling for application to the cable**
- **Field serviceable (Category A) connectors qualified to MIL-C-39012**
- **Field replaceable (Category C) plugs with captivated center contact**
- **Field replaceable plugs can be terminated with industry standard tooling**
- **Tarnish resistant Nickel finish available**
- **Choice of different dielectrics**
- **Listed under the Component Program of Underwriters Laboratories Inc., File No. E81956**
- **PC Board soldered connectors are recognized under the Component Program of Underwriters Laboratories Inc., File No. E81956**
- **Certified by Canadian Standards Association File No. LR 7189**



The AMP BNC RF connector family with bayonet locking coupling provides highly reliable, quick connect/disconnect coaxial connections. Exclusive single and O crimp terminations allow positive insulation grip and require no soldering, providing terminations at a very low overall applied cost.

Available in both 50 and 75 ohm versions, these connectors feature numerous styles including cable plugs and jacks, adapters and printed circuit board connectors. In addition to a variety of crimp type terminations, connectors are furnished in field replaceable and twist-on styles. These connectors accept a wide range of coaxial cables and are intermateable with industry standard connectors designed to MIL-C-39012 specifications.

Tyco Electronics can also supply low cost alternatives with an extensive commercial type product line. A lower cost consumer series product offers the capability to supply center contacts in strip form and allow for automated center contact crimp technology. All connectors are designed around the mil-specifications, but utilize low-cost materials, offering comparable mechanical and electrical performance.

Related Product Data:

Product Specifications

108-1275 — BNC Ohm Terminators
108-12020 — BNC O Crimp Connectors
108-12044 — BNC Commercial Hex Crimp
108-12047 — BNC Commercial and Hex Crimp Connectors
108-12074 — BNC Solder Jacks
108-12075 — BNC Connectors (Category A)
108-12078 — BNC Commercial PCB Panel-Mount Jacks
108-12002 — BNC Commercial T Adapter
108-12095 — BNC Commercial 75 Ohm Connectors
108-12096 — BNC Commercial Feed-Thru and Bulkhead Adapters
108-12079 — BNC Commercial 50 Ohm Solder Jacks
108-12103 — BNC Commercial PCB Press Fit Jacks

Application Specifications

114-12001 — BNC Commercial PCB Jack Press Fit

Performance Specifications
Page 10005

Material Specifications
Page 10006

Tooling — Pages 10076,10077

Military Category — All mil type O crimp connectors are Category B Type (AMP Crimp Tooling), unless otherwise noted.

Packaging — All Mil Type connectors are packaged individually, all O crimp connectors are bulk packaged and all Hex crimp connectors are individually packaged unless otherwise noted.

For complete product information, order Catalog 1307191

Products for Industrial & Commercial Applications

Dimensions are shown for reference purposes only.

Dimensions are in inches and millimeters unless otherwise specified. Values in brackets are metric equivalents.

Specifications subject to change.

Technical Support Center
1-800-522-6752
www.tycoelectronics.com

Performance Specifications

Characteristics	Single Crimp (Mil Type)	Category B O Crimp (Mil Type)	Straight Solder Clamp	Right Angle Solder Clamp	Commercial O Crimp & Hex Crimp 50 Ohms	Commercial O Crimp & Hex Crimp 75 Ohms	Commercial PC Board 50 & 75 Ohms	Commercial Solder 50 Ohm Jacks
Electrical								
Impedance, Nom. (Ohms)	50	50	50	50	50	75	50 & 75	50 & 75
Working Voltage (Volts RMS)	500	500	500	500	500	500	500	500
Contact Resistance (Milliohms)	Inner: 1.5 Outer: 0.3	Inner: 1.5 Outer: 0.2	Inner: 1.5 Outer: .20	Inner: 1.5 Outer: .20	Inner: 2.0 Outer: 1.0	Inner: 2.0 Outer: 2.0	Inner: 6/1.5 Outer: 3/0.2	Inner: 2.75 Outer: 1.0
Initial Insulation Resistance (Megohms)	5000	5000	5000	5000	5000	5000	5000	5000
Dielectric Withstanding Voltage (VAC)	1500	1500	1500	1500	1500	1500	1500	1500
Corona Level at 70,000 ft. (Volts, RMS)	375	375	375	375	375	375	—	375
RF Leakage, Max. (dB)	—	-55 at 2-3 GHz	-55 at 2-3 GHz	-55 at 2-3 GHz	-55 at 2-3 GHz	-55 at 1-2 GHz	—	—
RF Insertion Loss, Max. (dB)	—	0.2 at 3 GHz	0.2 at 3 GHz	0.3 at 3 GHz	0.2 at 3 GHz	0.15 at 2 GHz	—	—
Frequency Range (GHz)	0-2.5	0-4	0-4	0-4	0-4	0-2	0-4 and	0-4
VSWR in Frequency Range Max.	1.35	1.30	1.30	1.35	1.30	1.30	—	—
Mechanical								
Force to Engage (lbs. [N])/couple, (in-lbs. [N-M]) max.	13.3/11.12 [3/2.5]	13.3/11.12 [3/2.5]	13.3/.028 [3/2.5]	13.3/.028 [3/2.5]	26.7/26.69 [6/6.0]	26.7/26.69 [6/6.0]	—	—
Coupling Nut Retention, Min. N [lbs.]	444.8 [100]	444.8 [100]	444.8 [100]	444.8 [100]	266.9 [60]	266.9 [60]	—	—
Cable Retention, N [lbs.]	266.9 [60] (RG58C/U)	266.9 [60] (RG58C/U)	177.9 [40] (RG58C/U)	177.9 [40] (RG58C/U)	266.9 [60] (RG58C/U)	266.9 [60] (RG58C/U)	266.9 [60] (PCB Ret)	—
Durability (Cycles)	500	500	500	500	500	500	500	500
Jam Nut Mounting Torque, Max. [N•m] (in. lbs.)	25 [2.8]	25 [2.8]	25 [2.8]	—	25 [2.8]	25 [2.8]	25[3]/12[4] [2.8/1.4]	25 [2.8]
Environmental								
Temperature Range, Operating (C°)	-65 to +85	-65 to +165[1] -55 to +85[2]	-65 to +165	-65 to +165	-55 to +85	-55 to +85	-55 to +85	-65 to +165
Vibration	MIL-STD-202 Method 204 Cond. B	MIL-STD-202 Method 204 Cond. B	MIL-STD-202 Method 204 Cond. B	MIL-STD-202 Method 204 Cond. B	MIL-STD-1344 Method 2005 Cond. III	MIL-STD-202 Method 204 Cond. B	MIL-STD-202 Method 201A	MIL-STD-202 Method 204 Cond. B
Physical Shock	MIL-STD-202 Method 213 Cond. G, 50 G's	MIL-STD-202 Method 213 Cond. G, 50 G's	MIL-STD-202 Method 213 Cond. G	MIL-STD-202 Method 213 Cond. G	MIL-STD-1344 Method 2004 Cond. G, 100 G's	MIL-STD-202 Method 213 Cond. I, 100 G's	MIL-STD-202 Method 213 Cond. I or A, 50 G's	MIL-STD-202 Method 213 Cond. I, 100 G's
Thermal Shock	MIL-STD-202 Method 107	MIL-STD-202 Method 107	MIL-STD-202 Method 107	MIL-STD-202 Method 107	MIL-STD-1344 Method 1003 Cond. A	MIL-STD-202 Method 107	MIL-STD-202 Method 107	MIL-STD-202 Method 107
Moisture Resistance	MIL-STD-202 Method 106	MIL-STD-202 Method 106	MIL-STD-202 Method 106	MIL-STD-202 Method 106	MIL-STD-1344 Method 1002 Type II	MIL-STD-202 Method 106	MIL-STD-202 Method 106	MIL-STD-202 Method 106
Salt Spray	MIL-STD-202 Method 101 Cond. B	MIL-STD-202 Method 101 Cond. B	MIL-STD-202 Method 101 Cond. B	MIL-STD-202 Method 101 Cond. B	MIL-STD-1344 Method 1001 Cond. B	MIL-STD-202 Method 101 Cond. B	MIL-STD-202 Method 101 Cond. B	MIL-STD-202 Method 101 Cond. B
Product Specification	108-12002	108-12020	—	—	108-12044 108-12047	108-12095	108-12078	108-12079

[1] Assembled to cable with polytetrafluorethylene dielectric.
[2] Assembled to cable with polyethylene dielectric.
[3] For Metal Threads
[4] For Polyester Threads

Performance Specifications

Connector Component	Single Crimp (Mil Type)	Category B & C O Crimp (Mil Type)	Straight Solder Clamp	Right Angle Solder Clamp	Commercial O Crimp Hex Crimp & Terminators	Commercial PCB Solder	Commercial PCB Press Fit	Commercial Solder Ohm Jacks	Adapters
Connector Material									
Collar	Brass QQ-B-626	Brass QQ-B-626	Brass	Brass	Brass QQ-B-626 Zinc QQ-Z-363	—	—	—	Brass QQ-B-626
Outer Contact (Plug)	Brass QQ-B-626 Beryl. Copper QQ-C-530	Phos. Bronze QQ-B-750	Brass	Brass	Brass MIL-C-21768	—	—	—	Brass QQ-B-626 Beryl. Copper QQ-C-530
Shell (Jack)	Brass QQ-B-626	Brass QQ-B-626	Brass	—	Zinc QQ-Z-363	Zinc QQ-Z-363	Zinc Zinc QQ-Z-363	QQ-Z-363 Brass QQ-B-626	Brass QQ-B-626
Dielectric	TEFLON MIL-P-19468 Polypropylene Gen. Purpose	TEFLON MIL-P-19468	TEFLON	TEFLON	Polyethylene Polypropylene Polymethylpentene Gen. Purpose	Polymethylpentene Gen. Purpose[1]	TEFLON MIL-P-19468	TEFLON MIL-P-19468 Polyester PBT MIL-P-24519	TEFLON MIL-P-19468 Polypropylene, Gen. Purpose
Center Contact (Plug)	Brass QQ-B-626	Brass QQ-B-626	Brass	Brass	Brass QQ-B-626	—	—	—	Brass QQ-B-626 Beryl. Copper QQ-C-530
Center Contact (Jack)	Beryl. Copper ASTM-B-643 QQ-C-530	Beryl. Copper ASTM-B-643 QQ-C-530	Beryl. Copper	Beryl. Copper	Beryl. Copper QQ-C-530	Phos. Bronze QQ-B-750	Beryl. Copper QQ-C-530	Phos. Bronze QQ-B-570 Beryl. Copper QQ-C-530	Phos. Bronze QQ-B-570 Beryl. Copper QQ-C-530
Gasket	Silicon Rubber QQ-R-765	Silicon Rubber QQ-R-765	Silicon Rubber	Silicon Rubber	Silicon Rubber QQ-R-765	—	—	—	Silicon Rubber QQ-R-765
Ferrule	Copper QQ-C-576	Copper QQ-C-576	—	—	Copper QQ-C-576	—	—	—	—
Connector Primary Finishes[2]									
Collar	Silver QQ-S-365 Bright Nickel QQ-N-290	Silver QQ-S-365 Bright Nickel QQ-N-290	Silver/ Bright Nickel	Silver/ Bright Nickel	Bright Nickel QQ-N-290	—	—	—	Silver QQ-S-365 Bright Nickel QQ-N-290
Outer Contacts (Plug & Jack)	QQ-S-365 Gold	Silver QQ-S-365 Bright Nickel QQ-N-290	Silver/ Bright Nickel	Silver/ Bright Nickel	Bright or Matte Nickel QQ-N-290	Bright Nickel QQ-N-290	Bright Nickel QQ-N-290	Bright Nickel QQ-N-290	Silver QQ-S-365 Bright Nickel QQ-N-290
Center Contacts (Plug & Jack)	MIL-G-45204 Silver	Gold MIL-G-45204	Gold	Gold	Tin Lead ASTM-B-545 Silver, QQ-S-365 Gold, MIL-G-45204	Tin Lead ASTM-B-545 Silver, QQ-S-365 Gold, MIL-G-45204	Gold MIL-B-45204	Tin Lead ASTM-B-545 Silver, QQ-S-365 Gold, MIL-G-45204	Silver QQ-S-365 Gold MIL-G-45204
Ferrule[3]	QQ-S-365	Silver QQ-S-365 Tin Lead ASTM-B-545	—	—	Tin Lead ASTM-B-545	—	—	—	—

[1] Several pc board connectors have an outer polyester PBT insulator per MIL-P-24519.
[2] If more than one finish is listed, refer to individual catalog page(s) or customer drawings for exact specification.
[3] Ferrules with tin-lead finish are used with nickel plated outer contacts.

Plugs, Crimp

Single Crimp

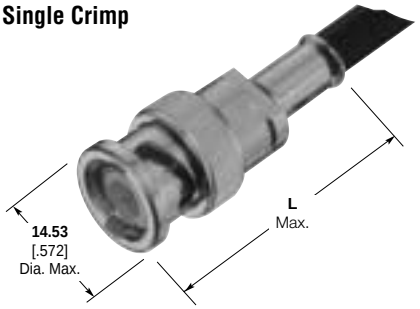

Hex and O Crimp

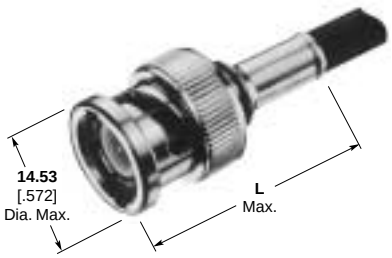

RG/U Cable	Termination Type	Center Contact Plating	Body Plating	Dielectric	Style	L Dim.	CERTI-CRIMP Hand Tool with Integral Die	Interchangeable Dies for PRO-CRIMPER Hand Tool 354940-1 or PRO-CRIMPER Adapter 679304-1	Interchangeable Dies for Hand Tool 69710-1 & 626 Pneu. Head 318161-1	Part Numbers
178, 178A, 178B, 196, 196A	Single Crimp	Gold	Silver	TEFLON	Mil Type	**33.33** 1.312	69245-4	—	69471	330876
174, 188, 188A, 316	Hex Crimp	Gold	Nickel	Polyethylene	Commercial	**33.53** 1.320	—	58436-3	—	2-221128-1
	O Crimp	Gold	Nickel	Polyethylene	Commercial	**27.69** 1.090	220009-5	318450-2	220217-3	1-227079-6
	O Crimp	Gold	Nickel	Polyethylene	Economy	**27.69** 1.090	—	58559-1	—	414852-3
	O Crimp	Gold	Nickel	Polyethylene	Economy	**27.69** 1.090	—	—	—	414915-3[5]
	O Crimp	Gold	Nickel	TEFLON	Mil Type	**30.18** 1.188	220009-1	—	220026-1	225395-7
	O Crimp	Gold	Silver	TEFLON	Mil Type	**30.18** 1.188	220009-1	—	220026-1	2-331350-4
	Single Crimp	Gold	Silver	TEFLON	Mil Type	**33.33** 1.312	69245-2	—	69422	2-330061-1
179, 179A, 179B, 161, 187, 187A, Belden 9221	Hex Crimp	Gold	Nickel	Polyethylene	Commercial	**33.53** 1.320	—	58436-3	—	2-221128-3
	O Crimp	Gold	Nickel	Polyethylene	Commercial	**27.69** 1.090	220009-5	318450-2	220217-3	2-227079-2
	O Crimp	Gold	Nickel	TEFLON	Mil Type	**30.18** 1.188	220009-1	—	220026-1	225395-8
	O Crimp	Gold	Silver	TEFLON	Mil Type	**30.18** 1.188	220009-1	—	220026-1	2-331350-5
	Single Crimp	Gold	Silver	TEFLON	Mil Type	**33.33** 1.312	69245-1	—	69408	2-329446-1
RD 316, 188, Double Braid	O Crimp	Gold	Nickel	Polyethylene	Commercial	**27.69** 1.090	69477-4	58539-1	—	8-227079-2
Belden 9252, 122	O Crimp	Gold	Nickel	TEFLON	Mil Type	**38.10** 1.500	69477-2	—	69669-2	5-225395-7
180, 180A, C1180B, 195, 195A	Hex Crimp	Gold	Nickel	Polyethylene	Commercial	**33.53** 1.320	—	58436-3	—	2-221128-5
	O Crimp	Gold	Nickel	TEFLON	Mil Type	**35.44** 1.395	69477-2	—	69669-2	225395-9
Belden 8219	Hex Crimp	Gold	Nickel	Polyethylene	Commercial	**33.53** 1.320	—	58436-1[2]	—	2-221128-7
	O Crimp	Gold	Nickel	Polyethylene	Commercial	**27.69** 1.090	220187-1	58435-1[1]	220217-1	6-227079-7[3]
Belden 9907, 89907 Comm/ Scope 2104	O Crimp	Gold	Nickel	Polyethylene	Commercial	**27.69** 1.090	220187-1	318452-2	220217-1	6-227079-8[4]
Belden 8218	O Crimp	Gold	Nickel	Polyethylene	Commercial	**27.69** 1.090	69477-4	58539-1	58376-1	1-227079-9
	O Crimp	Gold	Nickel	TEFLON	Mil Type	**30.18** 1.188	69477-2	—	69669-2	1-225395-0

[1] Order AMP PRO-CRIMPER Coaxial "O" Crimp Hand Tool assembly 58433-1, which includes dies 58435-1.
[2] Order AMP PRO-CRIMPER Coaxial Hex Crimp Hand Tool assembly 58433-2, which includes dies 58436-1.
[3] For use with Belden 9907, Comm/Scope 3104, Belden 8219 only.
[4] For use with Belden 89907, Comm/Scope 2104 only.
[5] Kit includes connector subassembly and ferrule only, center contact **Part Number** 1-414724-0 supplied separately on strip. Terminate with AMP-O-LECTRIC terminating machine 220152-1 with applicator.

For complete product information, order Catalog 1307191

Products for Industrial & Commercial Applications

Dimensions are shown for reference purposes only.

Dimensions are in inches and millimeters unless otherwise specified. Values in brackets are metric equivalents.

Specifications subject to change.

Technical Support Center
1-800-522-6752
www.tycoelectronics.com

Plugs, Crimp

Single Crimp

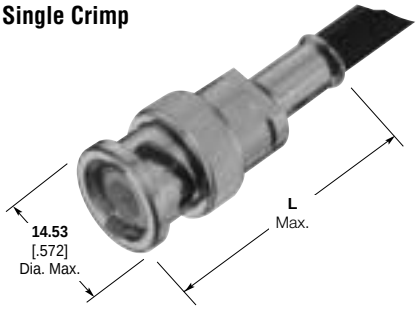

Hex and O Crimp

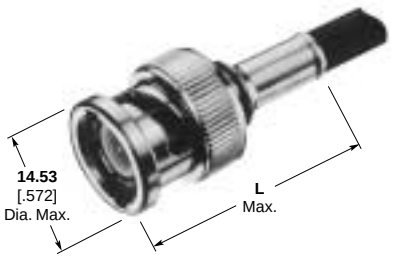

RG/U Cable	Termination Type	Center Contact Plating	Body Plating	Dielectric	Style	L Dim.	CERTI-CRIMP Hand Tool with Integral Die	Interchangeable Dies for PRO-CRIMPER Hand Tool 354940-1 or PRO-CRIMPER Adapter 679304-1	Interchangeable Dies for Hand Tool 69710-1 & 626 Pneu. Head 318161-1	Part Numbers
58, 58A, 58B, 58C	Hex Crimp	Gold	Nickel	Polyethylene	Commercial	**33.53** 1.320	—	58436-1[2]	—	221128-1[3]
	O Crimp	Gold	Nickel	Polyethylene	Commercial	**27.69** 1.090	220187-1	58435-1[1]	220217-1	227079-5
	O Crimp	Silver	Nickel	Polyethylene	Commercial	**27.69** 1.090	220187-1	58435-1[1]	220217-1	227079-9
	O Crimp	Gold	Nickel	Polyethylene	Economy	**27.69** 1.090	—	58558-1	—	414852-1
	O Crimp	Gold	Nickel	Polyethylene	Economy	**27.69** 1.090	—	—	—	414915-1[4,5]
	O Crimp	Gold	Nickel	TEFLON	Mil Type	**33.74** 1.328	69478-1	220189-3	69727	225395-1
	O Crimp	Gold	Silver	TEFLON	Mil Type	**33.74** 1.328	69478-1	220189-3	69727	2-331350-1
	Single Crimp	Gold	Silver	TEFLON	Mil Type	**33.33** 1.312	69140-1	—	69223-1	2-329444-1
141, 141A, 303	O Crimp	Gold	Nickel	TEFLON	Mil Type	**30.18** 1.188	69478-1	220189-3	69727	225395-5
Belden 88240, Berk-Tek BTDC-58, Comm/ Scope 2135	Hex Crimp	Gold	Nickel	Polyethylene	Commercial	**33.53** 1.320	—	58436-1[2]	—	1-221128-0
	O Crimp	Gold	Nickel	Polyethylene	Commercial	**33.33** 1.312	220187-1	58435-1[1]	220217-1	4-227079-3
	O Crimp	Gold	Nickel	TEFLON	Mil Type	**33.33** 1.312	69478-1	220189-3	69727	4-225395-2
223, 55, 55A, 55B	O Crimp	Gold	Nickel	Polyethylene	Commercial	**27.69** 1.280	220187-1	58435-1[1]	220217-1	227079-6
	O Crimp	Gold	Nickel	TEFLON	Mil Type	**43.64** 1.718	69478-1	220189-3	69727	225395-3
	Single Crimp	Gold	Silver	TEFLON	Mil Type	**33.33** 1.312	69140-2	—	69424	2-329444-2
142, 142A, 142B, 400	O Crimp	Gold	Nickel	Polyethylene	Commercial	**27.69** 1.090	220187-1	58435-1[1]	220217-1	6-227079-1
	O Crimp	Gold	Nickel	TEFLON	Mil Type	**30.18** 1.188	69478-1	220189-3	69727	225395-6
	O Crimp	Gold	Silver	TEFLON	Mil Type	**30.18** 1.188	69478-1	220189-3	69727	2-331350-9
	Single Crimp	Gold	Silver	TEFLON	Mil Type	**33.33** 1.312	69331-1	—	69429-1	2-330358-2

Consult Tyco Electronics for recommended crimp tooling.
[1] Order AMP PRO-CRIMPER Coaxial "O" Crimp Hand Tool assembly 58433-1, which includes dies 58435-1.
[2] Order AMP PRO-CRIMPER Coaxial Hex Crimp Hand Tool assembly 58433-2, which includes dies 58436-1.
[3] Bulk packaged.
[4] Kit includes connector subassembly and ferrule only, center contact **Part Number** 414724-2 supplied separately on strip.
[5] Terminate with AMP-O-LECTRIC terminating machine 220152-1 with applicator.

Plugs, Crimp

Single Crimp

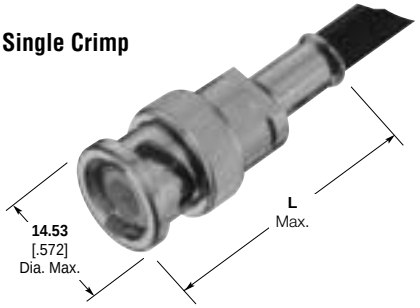

Hex and O Crimp



RG/U Cable	Termination Type	Center Contact Plating	Body Plating	Dielectric	Style	L Dim.	CERTI-CRIMP Hand Tool with Integral Die	Interchangeable Dies for PRO-CRIMPER Hand Tool 354940-1 or PRO-CRIMPER Adapter 679304-1	Interchangeable Dies for Hand Tool 69710-1 & 626 Pneu. Head 318161-1	Part Numbers
124, 140, 210, 62, 62A, 62B, 59, 59A, 59B, Belden 9291, 9209, 9269	Hex Crimp	Gold	Nickel	Polyethylene	Commercial	**33.53** 1.320	—	58436-1[2]	—	1-221128-1
	O Crimp	Gold	Nickel	Polyethylene	Commercial	**27.69** 1.090	220187-2	58435-1[1]	220217-2	227079-7
	O Crimp	Silver	Nickel	Polyethylene	Commercial	**27.69** 1.090	220187-2	58435-1[1]	220217-2	1-227079-1
	O Crimp	Gold	Nickel	Polyethylene	Economy	**27.69** 1.090	—	58558-1	—	414852-2
	O Crimp	Gold	Nickel	Polyethylene	Economy	**27.69** 1.090	—	—	—	414915-2[3,4]
	O Crimp	Gold	Nickel	TEFLON	Mil Type	**30.18** 1.188	69477-1	58537-1	—	225395-2
	O Crimp	Gold	Silver	TEFLON	Mil Type	**30.18** 1.188	69477-1	—	69669-1	331350
	Single Crimp	Gold	Silver	TEFLON	Mil Type	**33.33** 1.312	69141-1	—	—	2-329445-1
302, Belden 88241, 89269, Hi-Temp 62A, Times PL62, Berk-Tek, BTDC-59, BTDC-62	Hex Crimp	Gold	Nickel	Polyethylene	Commercial	**33.53** 1.320	—	58436-1[2]	—	1-221128-1
	O Crimp	Gold	Nickel	Polyethylene	Commercial	**33.33** 1.312	220187-2	58435-1[1]	220217-2	4-227079-9
	O Crimp	Gold	Nickel	TEFLON	Mil Type	**34.14** 1.344	69477-1	58537-1	69669-1	4-225395-1
Hi-Temp 59, Times PL59, PLF59 (20 AWG C.C.)	O Crimp	Gold	Nickel	Polyethylene	Commercial	**33.33** 1.312	—	58537-1	—	5-227079-3
Belden 9104, 9240, 9112, 9167, 9259, 9266, Times FM-59	Hex Crimp	Gold	Nickel	Polyethylene	Commercial	**33.53** 1.320	—	58436-1[2]	—	1-221128-7
	O Crimp	Gold	Nickel	Polyethylene	Commercial	**27.69** 1.090	220187-2	58537-1	—	1-227079-3
	O Crimp	Gold	Nickel	TEFLON	Mil Type	**30.94** 1.218	69477-1	58537-1	69669-1	2-225395-0
Belden 9248, 9114	O Crimp	Gold	Nickel	Polyethylene	Commercial	**27.69** 1.090	220247-1	58539-1	—	3-227079-0
Belden 8281, 9141, 9231, Western Electric 724, 728, 3049	Hex Crimp	Gold	Nickel	Polyethylene	Commercial	**33.53** 1.320	—	58436-2	—	1-221128-2
	O Crimp	Gold	Nickel	Polyethylene	Commercial	**31.75** 1.250	220043-1	58538-1	220088-1	5-227079-8
	O Crimp	Gold	Silver	TEFLON	Mil Type	**38.10** 1.500	220043-1	58538-1	220088-1	4-331350-0
	Single Crimp	Gold	Silver	Polypropylene	Mil Type	**41.50** 1.634	69652	—	220000	330878
8, 8A, 213	O Crimp	Gold	Silver	TEFLON	Mil Type	**27.31** 1.075	220015-1	—	—	225886-1
11, 11A	O Crimp	Gold	Silver	TEFLON	Mil Type	**47.63** 1.875	220015-1	—	—	225886-4
Belden 9914, Times FM-8	O Crimp	Gold	Silver	TEFLON	Mil Type	**47.63** 1.875	220015-1	—	—	225886-7
Alpha 9847, Belden 8213, 9292	O Crimp	Gold	Silver	TEFLON	Mil Type	**47.63** 1.875	220015-1	—	—	225886-5
9, 9A, 9B, 214	O Crimp	Gold	Silver	TEFLON	Mil Type	**52.38** 2.062	220015-1	—	—	225886-1

[1] Order AMP PRO-CRIMPER Coaxial "O" Crimp Hand Tool assembly 58433-1, which includes dies 58435-1.
[2] Order AMP PRO-CRIMPER Coaxial Hex Crimp Hand Tool assembly 58433-2, which includes dies 58436-1.
AMP PRO-CRIMPER II Hand Tool Frame without dies **Part Number** 354940-1
[3] Kit includes connector sub assembly and ferrule only, center contact **Part Number** 414724-4 supplied separately on strip.
[4] Terminate with AMP-O-LECTRIC terminating machine 220152-1 with applicator.

For complete product information, order Catalog 1307191

Products for Industrial & Commercial Applications

Dimensions are shown for reference purposes only.

Dimensions are in inches and millimeters unless otherwise specified. Values in brackets are metric equivalents.

Specifications subject to change.

Technical Support Center
1-800-522-6752
www.tycoelectronics.com

Right Angle Plugs, Crimp

Single Crimp

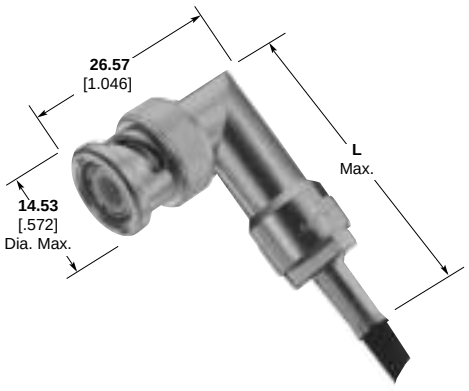

Hex and O Crimp

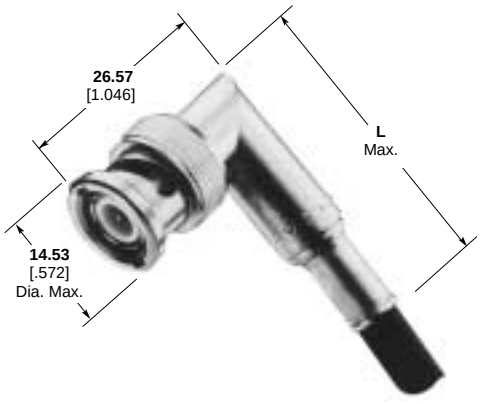

RG/U Cable	Termination Type	Center Contact Plating	Body Plating	Dielectric	Style	L Dim.	CERTI-CRIMP Hand Tool with Integral Die	Interchangeable Dies for PRO-CRIMPER Hand Tool 354940-1 or PRO-CRIMPER Adapter 679304-1	Interchangeable Dies for Hand Tool 69710-1 & 626 Pneu. Head 318161-1	Part Numbers
174, 188, 188A, 316	Hex Crimp	Gold	Nickel	Polymethyl-pentene	Commercial	**39.45** 1.553	—	258436-3	—	413959-3
	Single Crimp	Gold	Silver	TEFLON	Mil Type	**44.45** 1.750	269245-1	—	269422	331178
179, 179A, 179B, 161, 187, 187A, Belden 9221	Hex Crimp	Gold	Nickel	Polymethyl-pentene	Commercial	**39.45** 1.553	—	258436-3	—	413959-4
RD 316	Hex Crimp	Gold	Nickel	—	—	**39.45** 1.553	—	—	220026-1	413959-7
180, 180A, 180B, 195, 195A	Hex Crimp	Gold	Nickel	Polymethyl-pentene	Commercial	**39.45** 1.553	—	258436-3	—	413959-5
Belden 9907, 89907, 8219, Comm/Scope 2104, 3104	Hex Crimp	Gold	Nickel	Polymethyl-pentene	Commercial	**39.45** 1.553	—	258436-1	—	413959-6
58, 58A, 58B, 58C	Hex Crimp	Gold	Nickel	Polymethyl-pentene	Commercial	**39.45** 1.553	—	258436-1	—	413959-1
	O Crimp	Gold	Nickel	TEFLON	Mil Type	**37.29** 1.468	269478-1	220189-3	269727-1	225974-1
55, 55A, 55B, 223	Single Crimp	Gold	Silver	TEFLON	Mil Type	**44.45** 1.750	269140-1	—	269223-1	331175
	O Crimp	Gold	Nickel	TEFLON	Mil Type	**37.29** 1.468	269478-1	220189-3	269727-1	225974-2
	Single Crimp	Gold	Silver	TEFLON	Mil Type	**44.45** 1.750	269140-2	—	269429-1	331182
142, 142A, 142B, 400	O Crimp	Gold	Silver	TEFLON	Mil Type	**37.29** 1.468	269478-1	220189-3	269727-1	225973-4
	Single Crimp	Gold	Silver	TEFLON	Mil Type	**44.45** 1.750	269331-1	—	269429-1	331182
124, 140, 210, 62, 62A, 62B, 59, 59A, 59B, Belden 9291, 9209, 9269	Hex Crimp	Gold	Nickel	Polymethyl-pentene	Commercial	**39.45** 1.553	—	258436-1	—	413959-2
	O Crimp	Gold	Nickel	TEFLON	Mil Type	**37.29** 1.468	269477-1	258537-1	269669-1	225974-5

Jacks, Crimp

Single Crimp

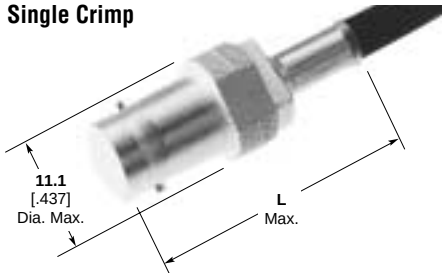

Hex and O Crimp

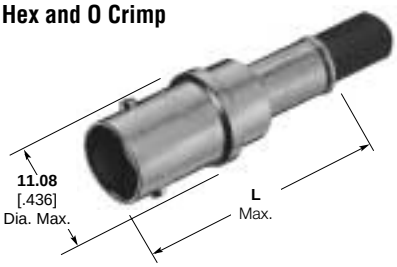

RG/U Cable	Termination Type	Center Contact Plating	Body Plating	Dielectric	Style	L Dim.	CERTI-CRIMP Hand Tool with Integral Die	Interchangeable Dies for PRO-CRIMPER Hand Tool 354940-1 or PRO-CRIMPER Adapter 679304-1	Interchangeable Dies for Hand Tool 69710-1 & 626 Pneu. Head 318161-1	Part Numbers
174, 188, 188A, 316	Hex Crimp	Gold	Nickel	Polymethyl-pentene	Commercial	**33.02** 1.300	—	58436-3	—	413779-3
	O Crimp	Gold	Nickel	Polypro-pylene	Commercial	**30.48** 1.200	220009-5	—	220217-3	228979-7
	O Crimp	Gold	Nickel	TEFLON	Mil Type	**30.48** 1.200	220009-1	—	220026-1	225396-7
	Single Crimp	Gold	Silver	TEFLON	Mil Type	**33.33** 1.312	69245-2	—	69422	2-330062-1
179, 179A, 179B, 161, 187, 187A, Belden 9221	Hex Crimp	Gold	Nickel	Polymethyl-pentene	Commercial	**33.02** 1.300	—	58436-3	—	413779-4
	O Crimp	Gold	Nickel	TEFLON	Mil Type	**30.48** 1.200	220009-1	—	220026-1	225396-8
180, 180A, 180B, 195, 195A	Hex Crimp	Gold	Nickel	Polymethyl-pentene	Commercial	**33.02** 1.300	—	58436-3	—	413779-5
Belden 89907, 9907, 8219, Comm/Scope 3104, 2104	Hex Crimp	Gold	Nickel	Polymethyl-pentene	Commercial	**33.02** 1.300	—	58436-1	—	413779-6
58, 58A, 58B, 58C	O Crimp	Gold	Nickel	Polypro-pylene	Commercial	**30.48** 1.200	220187-1	58435-1[1]	220217-1	228979-5
	O Crimp	Gold	Nickel	TEFLON	Mil Type	**30.48** 1.200	69478-1	220189-3	69727	225396-1
	O Crimp	Gold	Silver	TEFLON	Mil Type	**30.48** 1.200	69478-1	220189-3	69727	2-331351-1
	Single Crimp	Gold	Silver	TEFLON	Mil Type	**33.33** 1.312	69140-1	—	69223-1	2-329545-1
58, 58A, 58B, 58C Belden 88240, Berk-Tek BTDC-58 Comm/Scope 2135	Hex Crimp	Gold	Nickel	Polymethyl-pentene	Commercial	**33.02** 1.300	—	58436-1	—	413779-1
223, 55, 55A, 55B	Single Crimp	Gold	Silver	TEFLON	Mil Type	**33.33** 1.312	69140-2	—	69424	2-329452-2
124, 140, 210, 62, 62A, 62B, 59, 59A, 59B, Belden 9291, 9209, 9269	Hex Crimp	Gold	Nickel	Polymethyl-pentene	Commercial	**33.02** 1.300	—	58436-1	—	413779-2
	O Crimp	Gold	Nickel	Polypro-pylene	Commercial	**30.48** 1.200	220187-2	58435-1[1]	220217-2	228979-6
	O Crimp	Gold	Nickel	TEFLON	Mil Type	**30.48** 1.200	69477-1	58537-1	69669-1	225396-2
	O Crimp	Gold	Silver	TEFLON	Mil Type	**30.48** 1.200	69477-1	—	69669-1	331351
	Single Crimp	Gold	Silver	TEFLON	Mil Type	**33.33** 1.312	69141-1	—	69224-1	2-329549-1

[1] Order AMP PRO-CRIMPER Coaxial "O" Crimp Hand Tool assembly 58433-1, which includes dies 58435-1.

Products for Industrial & Commercial Applications

Dimensions are shown for reference purposes only.

Dimensions are in inches and millimeters unless otherwise specified. Values in brackets are metric equivalents.

Specifications subject to change.

Technical Support Center
1-800-522-6752
www.tycoelectronics.com

Bulkhead Jacks, Crimp

Note: Panel Insulating Bushings — Page 10013

Single Crimp

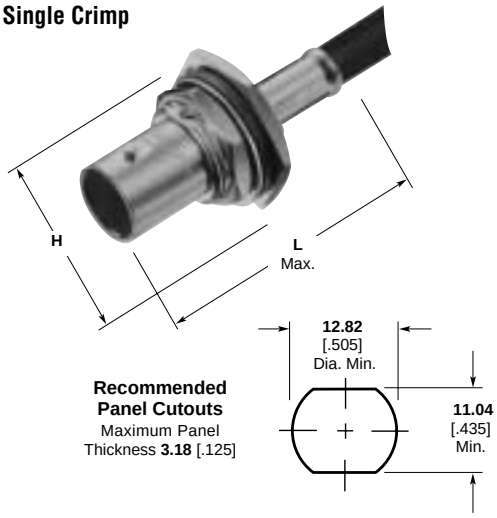

Hex and O Crimp

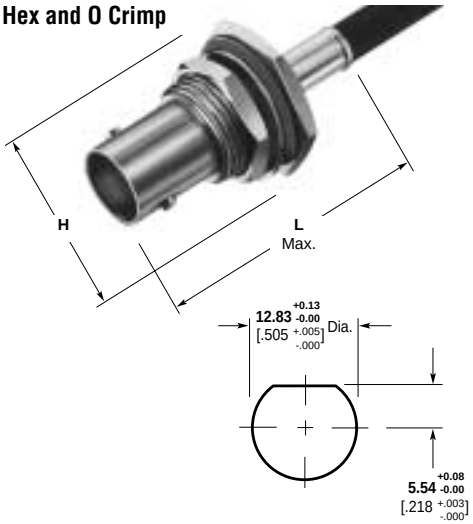

H = 11/16" across flats, **20.32** [.800] Max. across points

RG/U Cable	Termination Type	Center Contact Plating	Body Plating	Dielectric	Style	L Dim.	CERTI-CRIMP Hand Tool with Integral Die	Interchangeable Dies for PRO-CRIMPER Hand Tool 354940-1 or PRO-CRIMPER Adapter 679304-1	Interchangeable Dies for Hand Tool 69710-1 & 626 Pneu. Head 318161-1	Part Numbers
178, 178A, 178B, 196, 196A	Single Crimp	Gold	Silver	TEFLON	Mil Type	**32.13** 1.265	69245-4	—	69471	331974
174, 188, 188A, 316	Hex Crimp	Gold	Nickel	Polymethyl-pentene	Commercial	**36.83** 1.450	—	58436-3	—	413771-3
	O Crimp	Gold	Nickel	Polypro-pylene	Commercial	**34.93** 1.375	220009-5	—	220217-3	228980-7
	O Crimp	Gold	Nickel	TEFLON	Mil Type	**35.71** 1.406	220009-1	—	220026-1	225398-7
	O Crimp	Gold	Silver	TEFLON	Mil Type	**35.71** 1.406	220009-1	—	220026-1	1-331693-2
	Single Crimp	Gold	Silver	TEFLON	Mil Type	**32.13** 1.265	69245-2	—	69422	2-330063-1
179, 179A, 179B, 161, 187, 187A, Belden 9221	Hex Crimp	Gold	Nickel	Polymethyl-pentene	Commercial	**36.83** 1.450	—	58436-3	—	413771-4
	O Crimp	Gold	Nickel	TEFLON	Mil Type	**35.71** 1.406	220009-1	—	220026-1	225398-8
	Single Crimp	Gold	Silver	TEFLON	Mil Type	**32.13** 1.265	69245-1	—	69408	2-329458-1
Times RD316	O Crimp	Gold	Nickel	TEFLON	Mil Type	**35.71** 1.406	69477-2	—	69669-2	1-225398-5
180, 180A, 180B, 195, 195A	Hex Crimp	Gold	Nickel	Polymethyl-pentene	Commercial	**36.83** 1.450	—	58436-3	—	413771-5
Belden 9907, 89907, 8219, Comm/Scope 2104, 3104	Hex Crimp	Gold	Nickel	Polymethyl-pentene	Commercial	**36.83** 1.450	—	58436-1	—	413771-6

Bulkhead Jacks, Crimp

Note: Panel Insulating Bushings — See below

Single Crimp

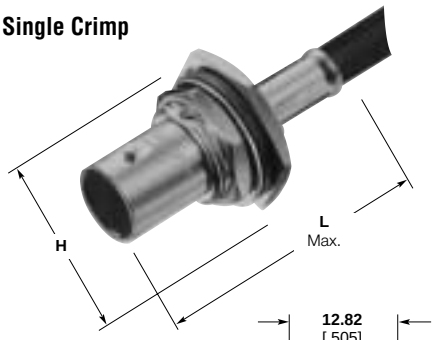

Hex and O Crimp



Recommended Panel Cutouts
Maximum Panel Thickness **3.18** [.125]

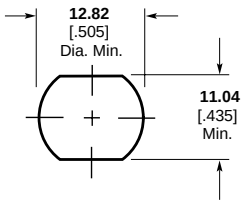

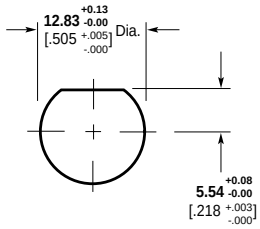

H = 11/16" across flats, **20.32** [.800] Max. across points

RG/U Cable	Termination Type	Center Contact Plating	Body Plating	Dielectric	Style	L Dim.	CERTI-CRIMP Hand Tool with Integral Die	Interchangeable Dies for PRO-CRIMPER Hand Tool 354940-1 or PRO-CRIMPER Adapter 679304-1	Interchangeable Dies for Hand Tool 69710-1 & 626 Pneu. Head 318161-1	Part Numbers
58, 58A, 58B, 58C, Belden 88240, Berk-Tek BTDC-58, Comm/Scope 2135	Hex Crimp	Gold	Nickel	Polymethyl-pentene	Commercial	**36.83** 1.450	—	58436-1	—	413771-1
58, 58A, 58B, 58C	O Crimp	Gold	Nickel	Polypro-pylene	Commercial	**34.93** 1.375	220187-1	58435-1[1]	220217-1	228980-5
	O Crimp	Gold	Nickel	TEFLON	Mil Type	**41.28** 1.625	69478-1	220189-3	69727	225398-1
	Single Crimp	Gold	Silver	TEFLON	Mil Type	**32.13** 1.265	69140-1	—	69223-1	2-329456-1
223, 55, 55A, 55B	O Crimp	Gold	Nickel	TEFLON	Mil Type	**35.71** 1.406	69478-1	220189-3	69727	225398-3
142, 142A, 142B, 400	O Crimp	Gold	Nickel	TEFLON	Mil Type	**35.71** 1.406	—	220189-3	69727	225398-6
124, 140, 210, 62, 62A, 62B, 59, 59A, 59B, Belden 9291, 9209, 9269	Hex Crimp	Gold	Nickel	Polymethyl-pentene	Commercial	**36.83** 1.450	—	58436-1	—	413771-2
	O Crimp	Gold	Nickel	Polypro-pylene	Commercial	**34.93** 1.375	220187-2	58435-1[1]	220217-2	228980-6
	O Crimp	Gold	Nickel	TEFLON	Mil Type	**41.28** 1.625	69477-1	58537-1	69669-1	225398-2

[1] Order AMP PRO-CRIMPER Coaxial "O" Crimp Hand Tool assembly 58433-1, which includes dies 58435-1.

Panel Insulating Bushings for Bulkhead Jacks

Material :
Nylon

Note: Can not be used with single crimp bulkhead jacks.

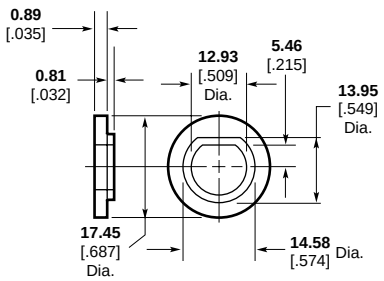

Part No. 330620 (2 Required)

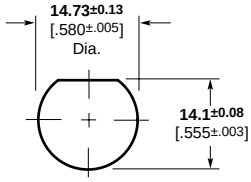

Recommended Panel Cutout

For complete product information, order Catalog 1307191

Products for Industrial & Commercial Applications

Dimensions are shown for reference purposes only.

Dimensions are in inches and millimeters unless otherwise specified. Values in brackets are metric equivalents.

Specifications subject to change.

Technical Support Center
1-800-522-6752
www.tycoelectronics.com

Right-Angle Jacks, PC Board/Panel Mount

Material:

Body — Nickel
Dielectric — Polymethylpentene

VALOX Body

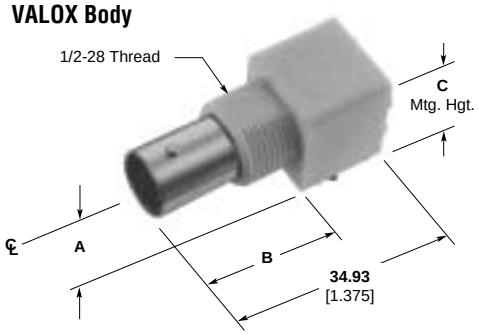

Metal Body

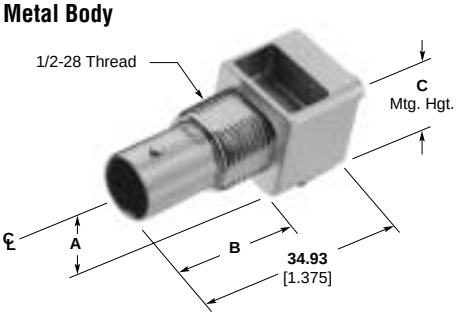

Mounting Post Style

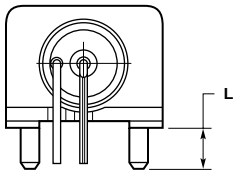

Compliant Post

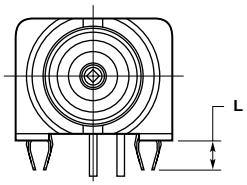

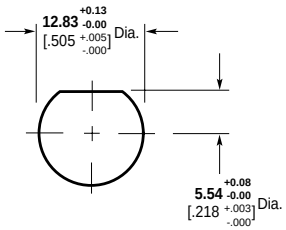

Maximum Panel Thickness **6.1** [.240]

Recommended Panel Cutout

Body Material	Center Contact Plating	Dimensions A	B	C	Part Numbers Without Mounting Posts	With Mounting Posts	L	With Compliant Posts	L
VALOX, White	Tin-Lead	**8.59** .338	**21.21** .835	**15.88** .625	226990-1	227161-1	**3.48** .137	—	—
	Gold1	**8.59** .338	**21.21** .835	**15.88** .625	226990-3	227161-3	**3.48** .137	—	—
	Gold2	**8.59** .338	**21.21** .835	**15.88** .625	—	1-227161-4	—	—	—
	Tin-Lead	**6.91** .272	**21.21** .835	**13.18** .519	226990-7	—	—	—	—
	Gold1	**6.91** .272	**21.21** .835	**13.18** .519	—	227161-7	**3.48** .137	414684-1	**4.70** 1.85
VALOX, Black	Tin-Lead	**8.59** .338	**21.21** .835	**15.88** .625	226990-2	227161-2	**3.48** .137	—	—
	Gold1	**8.59** .338	**21.21** .835	**15.88** .625	226990-6	227161-6	**3.48** .137	—	—
	Gold1	**6.91** .272	**21.21** .835	**13.18** .519	—	227161-9	**3.48** .137	415218-1	**2.79** .110
	Gold1	**6.17** .243	**21.21** .835	**11.68** .460	—	415046-1	—	415046-2	—
Metal	Tin-Lead	**8.26** .325	**20.83** .820	**15.88** .625	227433-1	227661-1	**3.48** .137	—	—
	Gold1	**8.26** .325	**20.83** .820	**15.88** .625	227676-1	227677-1 227677-2*	**3.48** .137	222785-1	**3.89** .153
	Gold1	**6.91** .272	**20.83** .820	**12.70** .500	—	413879-1	**3.48** .137	—	—
	Gold2	**6.91** .272	**20.83** .820	**12.70** .500	—	413879-2	**3.48** .137	—	—
High Temp. Housing	Gold1	**6.91** .272	**21.21** .835	**13.18** .519	—	—	—	415218-5	—

*IR reflow compatible
Plating:
Gold1 — 0.00076 [.000030] thick
Gold2 — 0.00127 [.000050] thick
Note: If an Insulating Bushing is required see **Part Number** 330620 and Panel Cutout on page 10013.

Lockwasher and Jam Nut



Part Number 1-329632-2 | **Part Number** 1-329631-2

Without Mounting Posts

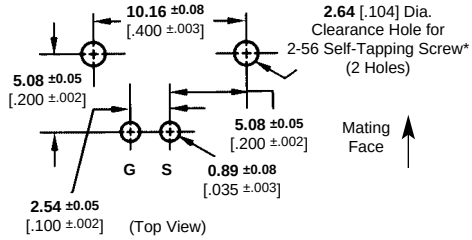

With Mounting Posts

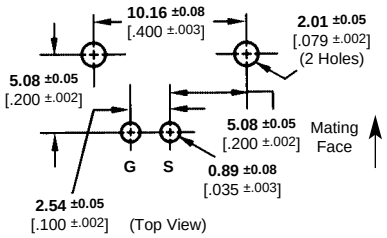

Recommended PC Board Layouts

* Screw for panel thickness of **2.38** [3/32] or greater **Part Number** 221108-2**.**
Screw for panel thickness of less than **2.38** [3/32] **Part Number** 221108-4**.**

For complete product information, order Catalog 1307191

Products for Industrial & Commercial Applications

Dimensions are shown for reference purposes only.

Dimensions are in inches and millimeters unless otherwise specified. Values in brackets are metric equivalents.

Specifications subject to change.

Technical Support Center
1-800-522-6752
www.tycoelectronics.com

Vertical Jacks, PC Board/Panel Mount

Plating:

Body — Nickel
Dielectric — Polymethylpentene

VALOX Body

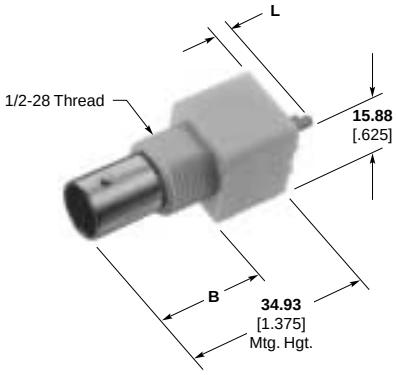

Metal Body

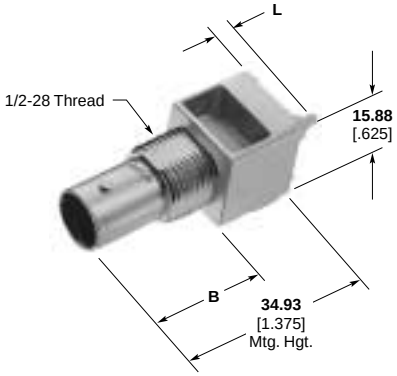

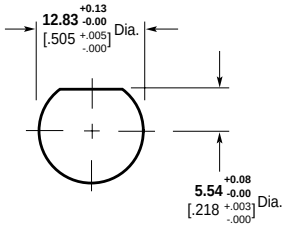

Maximum Panel Thickness **6.1** [.240]

Recommended Panel Cutout

Body Material	Center Contact Plating	Dimensions B	Dimensions L	Part Numbers Without Mounting Posts	Part Numbers With Mounting Posts
VALOX, White	Tin-Lead	**21.21** .835	**3.48** .137	226993-1	227222-1
	Gold	**21.21** .835	**3.48** .137	226993-3	227222-3
VALOX, Black	Tin-Lead	**21.21** .835	**3.48** .137	226993-2	227222-2
	Gold	**21.21** .835	**3.48** .137	226993-6	227222-6
Metal	Tin-Lead	**20.83** .820	**3.48** .137	227670-1	227671-1
	Gold	**20.83** .820	**3.48** .137	227672-1	227673-1

Note: If an Insulating Bushing is required see **Part Number** 330620 and Panel Cutout on page 10013.

Lockwasher and Jam Nut



Part Number 1-329632-2

Part Number 1-329631-2

Without Mounting Posts

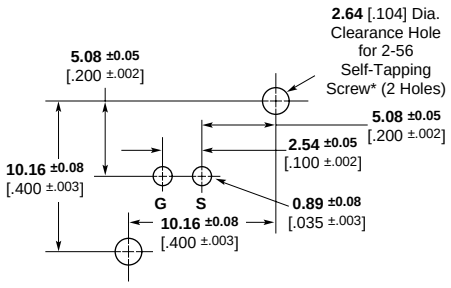

(Top View)

With Mounting Posts

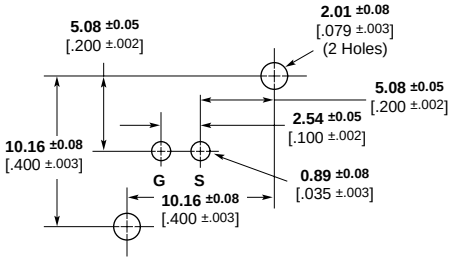

(Top View)

Recommended PC Board Layouts

* Screw for board thickness of **2.38** [.093] or greater **Part Number** 221108-2**.**
Screw for thickness of less than **2.38** [.093] **Part Number** 221108-4**.**

For complete product information, order Catalog 1307191

Products for Industrial & Commercial Applications

Dimensions are shown for reference purposes only.

Dimensions are in inches and millimeters unless otherwise specified. Values in brackets are metric equivalents.

Specifications subject to change.

Technical Support Center
1-800-522-6752
www.tycoelectronics.com

Vertical Metalized Jacks, PC Board Mount

Style A

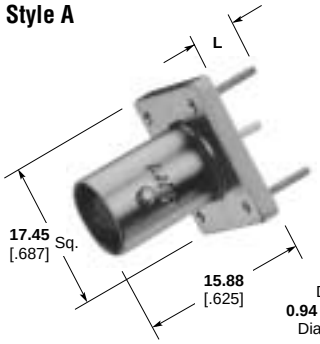

Recommended PC Board Layouts

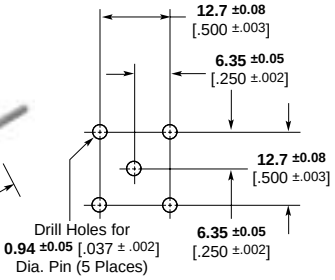

Style B

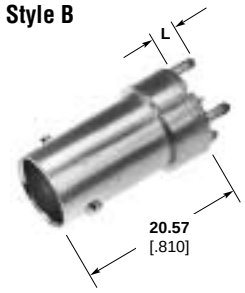

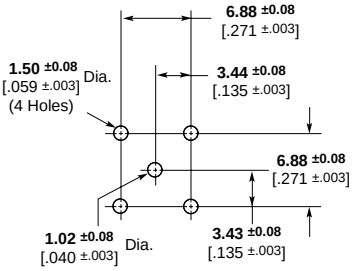

Body Plating	Center Contact Plating	Dielectric	Style	Leg Length L	Part Numbers
Nickel	Silver	VALOX	A	6.35 .250	227699-1
	Gold	VALOX	A	6.35 .250	227699-2
	Tin	VALOX	A	6.35 .250	227699-3
	Gold	VALOX	A	3.81 .150	414460-1[1]
	Silver	TEFLON	B	3.30 .130	413969-1
	Silver	VALOX	C	4.45 .175	222420-1
	Gold	VALOX	E	6.35 .250	415189-1
Tin-Lead	Gold	TEFLON	F	2.54 .100	1274360-1
	Gold	TEFLON	B	3.30 .130	413969-2
	Silver	VALOX	C	3.18 .125	414305-1
	Silver	VALOX	C	4.45 .175	414305-2
	Gold	VALOX	C	3.18 .125	414305-3
	Gold	VALOX	C	4.45 .175	414305-4
	Gold	VALOX	D	3.43 .135	221123-2
	Tin	VALOX	D	3.43 .135	221123-3

[1] With **.76** [.030] standoffs on top of legs.

Style C

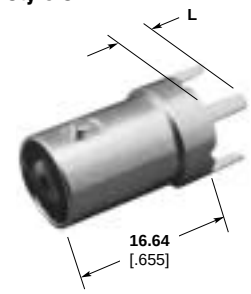

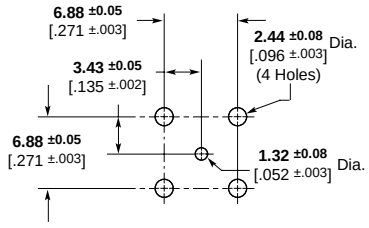

Style E (Panel Mount)

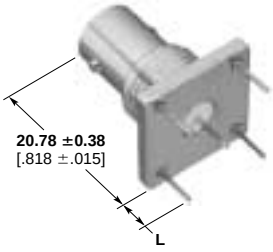

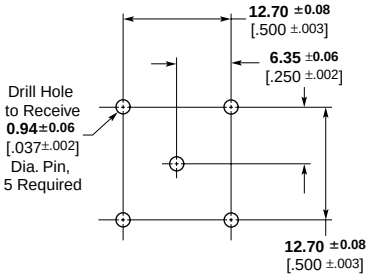

Style D

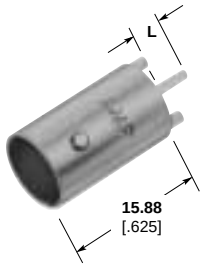

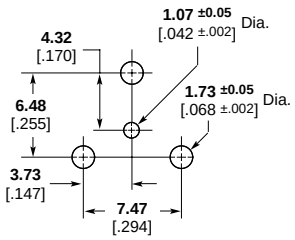

Style F (Push-On)

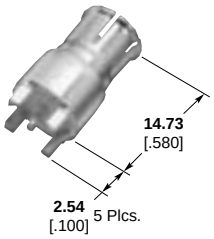

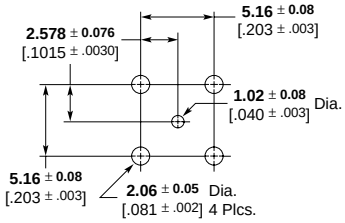

For complete product information, order Catalog 1307191

Products for Industrial & Commercial Applications

Dimensions are shown for reference purposes only.

Dimensions are in inches and millimeters unless otherwise specified. Values in brackets are metric equivalents.

Specifications subject to change.

Technical Support Center
1-800-522-6752
www.tycoelectronics.com

Vertical Metalized Jacks, PC Board Mount

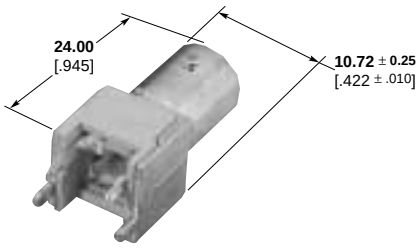

Part Number 1274314-1
(Switching)

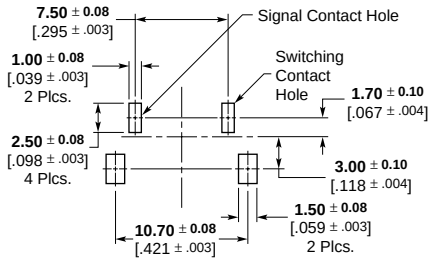

Recommended
PC Board Layout

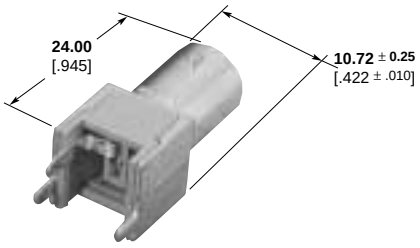

Part Number 1274315-1

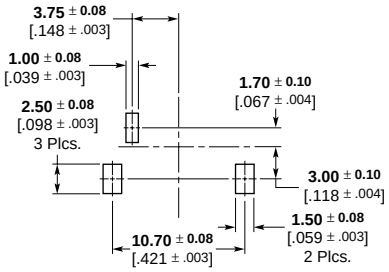

Recommended
PC Board Layout

Body Plating	Contact Plating	Dielectric	Part Numbers
Tin-Lead	Silver	Polyphenylene	1274314-1
Tin-Lead	Silver	Polyphenylene	1274315-1

Press Fit Vertical Metalized Jack, PC Board Mount

Insulating Bushing

Material :

Polypropylene

Part Number 222163-1

Only to be used on **Part Numbers**
222006-1 & 222462-1

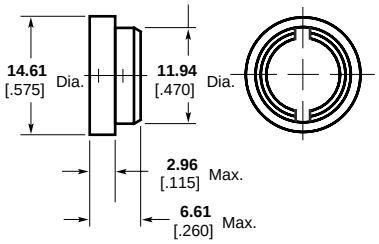

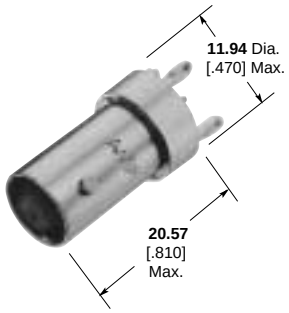

Part Number 222006-1

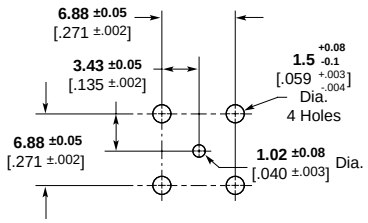

Recommended PC Board Layout
PC Board Thickness Not Less Than **0.99** [.093]

For complete product information, order Catalog 1307191

Products for Industrial & Commercial Applications

Dimensions are shown for reference purposes only.

Dimensions are in inches and millimeters unless otherwise specified. Values in brackets are metric equivalents.

Specifications subject to change.

Technical Support Center
1-800-522-6752
www.tycoelectronics.com

Right-Angle Metalized Jacks, PC Board Mount

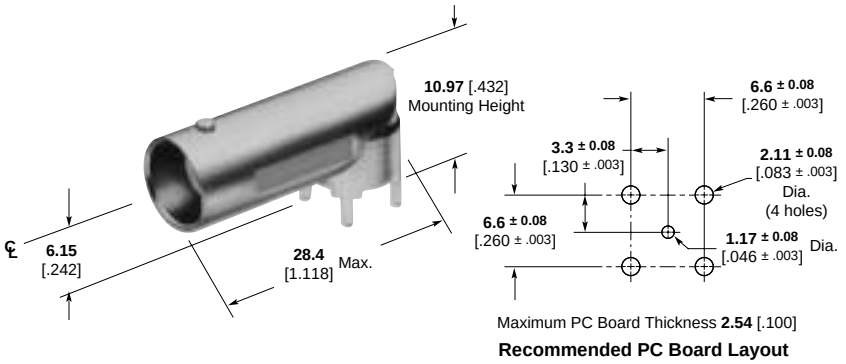

Maximum PC Board Thickness **2.54** [.100]

Recommended PC Board Layout

Body Plating	Dielectric	Center Contact Length	Part Numbers
Nickel	Polymethyl-pentene	**4.34** .171	413631-1
Tin-Lead	TEFLON	**4.34** .171	413631-2

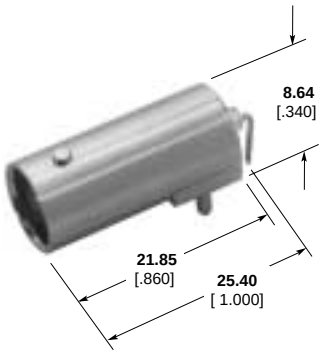

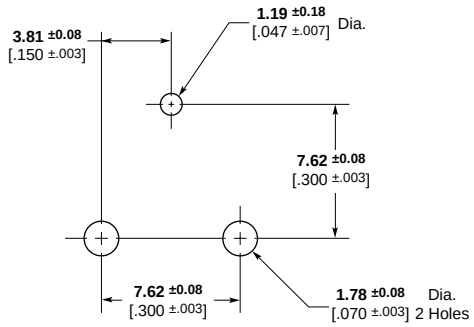

Recommended PC Board Layouts

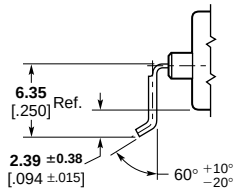

Body	Dielectric	Contact	Part Numbers
Nickel	TPX	Gold	414373-1
Nickel	TPX	Gold	414373-3**
Tin-Lead	TPX	Gold	414373-4**

**Board retention leg prevents connector from tipping during wave solder. For 414373-3 and 414373-4 only.

Right-Angle Metalized Jacks, PC Board/Panel Mount

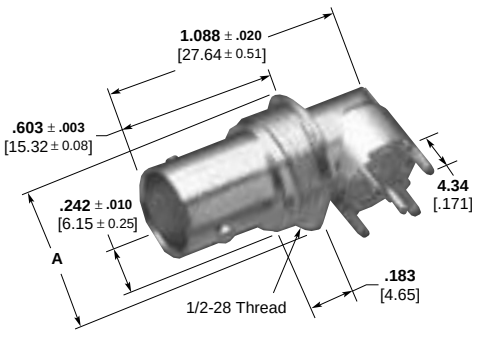

Lockwasher and Jam Nut see page 10015.

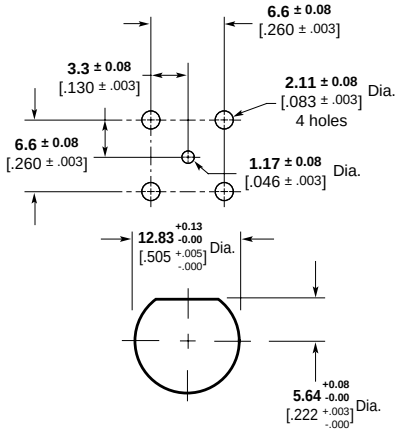

Maximum Panel Thickness **6.35** [.250]

Recommended Panel Cutout

Body Plating	Dielectric	Dim. A	Part Numbers
Tin-Lead	TPX	**11.66** .459	415025-2
Tin-Lead	TPX	**16.26** .640	415372-1

For complete product information, order Catalog 1307191

Products for Industrial & Commercial Applications

Dimensions are shown for reference purposes only.

Dimensions are in inches and millimeters unless otherwise specified. Values in brackets are metric equivalents.

Specifications subject to change.

Technical Support Center
1-800-522-6752
www.tycoelectronics.com

Product Facts

Hex Crimp and O Crimp Connectors

- **50 and 75 ohm commercial versions available**
- **Provides excellent performance at frequencies up to 7 GHz**
- **Low cost commercial type available**
- **Commercial type is smaller and lighter weight**
- **Tarnish resistant nickel finish**
- **Choice of dielectric materials**
- **Standard and weatherproof versions available**
- **Plugs available for high temperature cable**

Single Crimp Connectors

- **Fast application–one crimping operation terminates inner conductor, outer braid and cable support**
- **Low application cost**

Connectors for Semi-Rigid Cable

- **Crimp and solder versions available**
- **Standard cable stripping dimensions**
- **Universal cable termination common to all configurations**

Listed under the Component Program of Underwriters Laboratories Inc., File No. E81956

PC Board connectors are recognized under the Component Program of Underwriters Laboratories Inc., File No. E81956

Certified by Canadian Standards Association File No. LR 7189

The AMP TNC RF connector family, with 7/16-28 threaded couplings, provides low noise levels and optimum stability, and can withstand the shock and vibration often present in hostile environments.

Available in both 50 and 75 ohm versions, these connectors feature numerous styles including cable plugs and jacks, adapters and printed circuit board connectors. These connectors accept a wide range of coaxial cables and are intermateable with industry standard connectors designed to MIL-C-39012 specifications.

Single crimp connectors provide reduced application time and lower applied costs. This is accomplished by using AMP one-crimp operation tooling which simultaneously terminates the inner conductor, outer braid and cable support with one controlled stroke.

Tyco Electronics can also supply low-cost alternatives with a commercial type product line. These connectors are designed around the mil-specifications, offering comparable mechanical and electrical performance.



Related Product Data:

Military Category — All crimp connectors are Category B Type (AMP Crimp Tooling), unless otherwise noted.
Packaging — All Mil-Type connectors are packaged individually and all Commercial connectors are bulk packaged unless otherwise noted.

For complete product information, order Catalog 1307191

Products for Industrial & Commercial Applications

Dimensions are shown for reference purposes only.

Dimensions are in inches and millimeters unless otherwise specified. Values in brackets are metric equivalents.

Specifications subject to change.

Technical Support Center
1-800-522-6752
www.tycoelectronics.com

Specifications

Characteristics	Single Crimp (Mil Type)	Category B O Crimp (Mil Type)	Commercial O Crimp & Hex Crimp 50 & 75 Ohm	Commercial PCB	Commercial Solder Jacks	Semi-Rigid	Solder Clamp
Electrical							
Impedance, Nom. (Ohms)	50	50	50	50	50	50	50
Working Voltage (Volts RMS)	500	500	500	500	500	335	500
Contact Resistance (Milliohms)	Inner: 1.5 Outer: 3	Inner: 1.5 Outer: 0.2	Inner: 2.0 Outer: 0.3	Inner: 6.0 Outer: 3.0	Inner: 2.75 Outer: 1.0	Inner: 1.5 Outer: 0.2	Inner: 1.5 Outer: 0.2
Initial Insulation Resistance (Megohms)	5000	5000	5000	5000	5000	5000	5000
Dielectric Withstanding Voltage (VAC)	1500	1500	1500	1500	1500	1500	1500
Corona Level at 70,000 ft. (Picocoulombs)	5 max. @ 375 VRMS	5 max. @ 375 VRMS	5 max. @ 375 VRMS	—	—	5 max. @ 375 VRMS	5 max. @ 375 VRMS
RF Leakage, Max. (dB)	—	60 @ 2-3 GHz	55 @ 2-3 GHz	—	—	60 @ 2-3 GHz	55 @ 2-3 GHz
RF Insertion Loss, Max. (dB)	—	0.18 @ 9 GHz	0.2 @ 3 GHz	—	—	0.06 @ 3-6 GHz	0.2 @ 3 GHz
Frequency Range (GHz)	0-4	0-11	0-7	0-4	0-4	0-15	0-11
VSWR in Frequency Range Max.	1.35	1.3	1.40	—	—	1.35	1.30 @ 4 GHz
Mechanical							
Force to Engage/ Couple, lbs. [N]	10/2 [44.5/8.9]	2/2 [8.9/8.9]	6/6 [26.7/26.7]	—	—	2 [.023]	2 [.023]
Coupling Nut Retention, Min. lbs. [N]	100 [444.8]	100 [444.8]	60 [266.9]	—	—	100 [444.8]	100 [444.8]
Cable Retention, lbs. [N]	60 [266.9] RG58C/U	60 [266.9] RG58C/U	60 [266.9] RG58C/U	60 [266.9] (PCB Ret)	—	60 [266.9]	40 [178.0]
Durability (Cycles)	500	500	500	500	500	500	500
Jam Nut Mounting Torque, Max. lbs. [N•m]	25 [2.8]	25 [2.8]	25 [2.8]	25 [2.8]	25 [2.8]	25 [2.8]	25 [2.8]
Environmental							
Temperature Range, Operating (C°)	-65 to +85	-65 to +165[1] -55 to +85[2]	-55 to +85	-55 to +85	-65 to +165	-65 to +105	-65 to +165
Vibration	MIL-STD-202 Method 204 Cond. B	MIL-STD-202 Method 204 Cond. B	MIL-STD-202 Method 204 Cond. B	MIL-STD-202 Method 201A Cond. A	MIL-STD-202 Method 204 Cond. B	MIL-STD-202 Method 202 Cond. B	MIL-STD-202 Method 202 Cond. B
Physical Shock	MIL-STD-202 Method 213 Cond. G, (50 G's)	MIL-STD-202 Method 213 Cond. I, (100 G's)	MIL-STD-202 Method 213 Cond. I, (100 G's)	MIL-STD-202 Method 213 Cond. I, (100 G's)	MIL-STD-202 Method 213 Cond. I, (100 G's)	MIL-STD-202 Method 213 Cond. I	MIL-STD-202 Method 213 Cond. I
Thermal Shock	MIL-STD-202 Method 107	MIL-STD-202 Method 107 Cond. B	MIL-STD-20 Method 107 Cond. A	MIL-STD-202 Method 107	MIL-STD-202 Method 107	MIL-STD-202 Method 107	MIL-STD-202 Method 107
Moisture Resistance	MIL-STD-202 Method 106	MIL-STD-202 Method 106	MIL-STD-202 Method 106 Type II	MIL-STD-202 Method 106	MIL-STD-202 Method 106	MIL-STD-202 Method 106	MIL-STD-202 Method 106
Salt Spray	MIL-STD-202 Method 101 Cond. B	MIL-STD-202 Method 101 Cond. B	MIL-STD-202 Method 101 Cond. B	MIL-STD-202 Method 101 Cond. B	MIL-STD-202 Method 101 Cond. B	MIL-STD-202 Method 101 Cond. B	MIL-STD-202 Method 101 Cond. B
Product Specification	—	108-12001	108-12046	—	—	108-12032	—

[1] Assembled to cable with polytetrafluorethylene dielectric.
[2] Assembled to cable with polyethylene dielectric.

Specifications

Characteristics	Single Crimp (Mil Type)	Category B O Crimp (Mil Type)	Commercial O Crimp & Hex Crimp 50 & 75 Ohm	Commercial PCB	Commercial Solder Jacks	Semi-Rigid	Solder Clamp
Connector Material							
Collar	Brass QQ-B-626	Brass QQ-B-626	Brass QQ-B-626	—	—	Brass QQ-B-626	Brass QQ-B-626
Outer Contact (Plug)	Phos. Bronze QQ-B-750 Beryl. Copper QQ-C-530	Phos. Bronze QQ-B-750 Beryl. Copper QQ-C-530	Brass MIL-C-21768	—	—	Brass QQ-B-626	Brass QQ-B-626
Outer Contact (Jack)	Brass QQ-B-626	Brass QQ-B-626	Zinc QQ-Z-363	Zinc QQ-Z-363	Zinc QQ-Z-363	Brass QQ-B-626	Brass QQ-B-626
Dielectric	TEFLON MIL-P-19468	TEFLON MIL-P-19468	Polyethylene Polypropylene Gen. Purpose	Polypropylene Gen. Purpose[1]	TEFLON MIL-P-19468 Polyester PBT MIL-P-24519	TEFLON MIL-P-19468	TEFLON MIL-P-19468
Center Contact (Plug)	Brass QQ-B-626	Brass QQ-B-626	Brass QQ-B-626	—	—	Brass QQ-B-626	Brass QQ-B-626
Center Contact (Jack)	Beryl. Copper ASTM-B-643, QQ-C-530	Beryl. Copper ASTM-B-643, QQ-C-530	Beryl. Copper QQ-C-530	Phos. Bronze QQ-B-570	Phos. Bronze QQ-B-570	Beryl Copper QQ-C-530	Beryl Copper QQ-C-530
Gasket	Silicon Rubber QQ-R-765	Silicon Rubber QQ-R-765	Silicon Rubber QQ-R-765	—	—	Silicone Rubber QQ-R-765	Silicone Rubber QQ-R-765
Ferrule	Copper QQ-C-576	Copper QQ-C-576	Copper QQ-C-576	—	—	—	—
Connector Primary Finishes[2]							
Collar	Silver QQ-S-365	Silver QQ-S-365	Bright Nickel QQ-N-290	—	—	Nickel QQ-N-290	Nickel QQ-N-290
Outer Contact (Plug & Jack)	Silver QQ-S-365	Bright Nickel QQ-N-290	Bright or Matte Nickel QQ-N-290	Bright Nickel QQ-N-290	Bright Nickel QQ-N-290	Nickel QQ-N-290	Nickel QQ-N-290
Center Contact (Plug & Jack)	Gold MIL-G-45204	Silver QQ-S-365	Tin Lead, ASTM-B-545 Silver, QQ-S-365 Gold, MIL-G-45204	Tin Lead, ASTM-B-545 Silver, QQ-S-365 Gold, MIL-G-45204	Tin Lead, ASTM-B-545 Silver, QQ-S-365 Gold, MIL-G-45204	Gold MIL-G-45204	Gold MIL-G-45204
Ferrule	Silver QQ-S-365	Gold MIL-G-45204	Tin Lead ASTM-B-5	—	—	—	—

[1] Several pc board connectors have an outer polyester PBT insulator per MIL-P-24519.
[2] If several finishes are listed, refer to individual catalog page(s) or customer drawings for exact specifications.

Products for Industrial & Commercial Applications

Dimensions are shown for reference purposes only.

Dimensions are in inches and millimeters unless otherwise specified. Values in brackets are metric equivalents.

Specifications subject to change.

Technical Support Center
1-800-522-6752
www.tycoelectronics.com

Plugs, Crimp

Hex Crimp and O Crimp

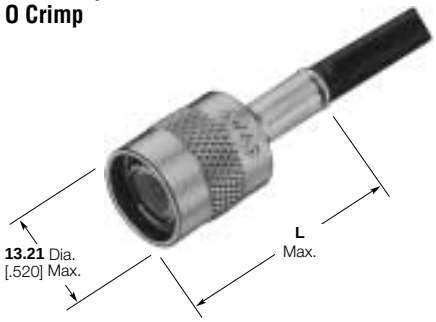

Mil Type O Crimp Weatherproof

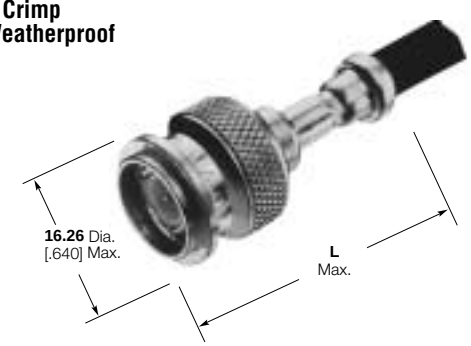

RG/U Cable	Termination Type	Center Contact Plating	Body Plating	Dielectric	Style	Comments	L Dim.	CERTI-CRIMP Hand Tool with Integral Die	Interchangeable Dies for PRO-CRIMPER Hand Tool 354940-1 or PRO-CRIMPER Adapter 679304-1	Interchangeable Dies for Hand Tool 69710-1 & 626 Pneu. Head 318161-1	Part Numbers
174, 188, 188A, 316	Hex Crimp	Gold	Nickel	Polypropylene	Commercial	—	**31.24** 1.230	—	58436-3	—	222506-5
179, 179A, 179B 161, 187, 187A Belden 9221	Hex Crimp	Gold	Nickel	Polypropylene	Commercial	—	**31.24** 1.230	—	58436-3	—	222506-6
RD316 188 Double Braid	Hex Crimp	Gold	Nickel	Polypropylene	Commercial	—	**31.24** 1.230	—	58436-3	—	222506-9
180, 180A, 180B 195, 195A	Hex Crimp	Gold	Nickel	Polypropylene	Commercial	—	**31.24** 1.230	—	58436-3	—	222506-7
58, 58A, 58B, 58C	Hex Crimp	Gold	Nickel	Polypropylene	Commercial	—	**31.25** 1.230	—	58436-1[2]	—	222506-1
	O Crimp	Gold	Silver	TEFLON	Mil Type	—	**34.93** 1.375	220045-2	—	—	225550-2
	O Crimp	Gold	Nickel	TEFLON	Mil Type	Weatherproof	**34.93** 1.375	220045-2	—	—	225555-2
58, 58A, 58B, 58C 141, 141A, 303	O Crimp	Gold	Nickel	Polypropylene	Commercial	—	**26.8** 1.055	220187-1	58435-1[1]	220217-1	227000-5
223, 55, 55A, 55B	Hex Crimp	Gold	Nickel	Polypropylene	Commercial	—	**31.24** 1.230	—	58436-1	—	1-222506-1
142, 142A 142B, 400	Hex Crimp	Gold	Nickel	Polypropylene	Commercial	—	**31.24** 1.230	—	58436-1	—	222506-4
	O Crimp	Gold	Silver	TEFLON	Mil Type	—	**34.29** 1.350	220045-2	—	—	225345-6
	O Crimp	Gold	Silver	TEFLON	Mil Type	Weatherproof	**34.93** 1.375	220045-2	—	—	225550-6
	O Crimp	Gold	Nickel	TEFLON	Mil Type	Weatherproof	**34.93** 1.375	220045-2	—	—	225555-6
124, 140, 210, 62, 62A, 62B, 59, 59A, 59B Belden 9291, 9209, 9269	Hex Crimp	Gold	Nickel	Polypropylene	Commercial	—	**29.72** 1.170	—	58436-1[2]	—	222506-2
	O Crimp	Gold	Nickel	Polypropylene	Commercial	—	**26.8** 1.055	—	58435-1[1]	—	227000-7
8, 8A, 213	O Crimp	Gold	Nickel	TEFLON	Mil Type	Weatherproof	**50.8** 2.000	220015-1	—	—	225555-7
Alpha 9847, Belden 8213, 9292	O Crimp	Gold	Silver	TEFLON	Mil Type	Weatherproof	**50.68** 1.995	220015-1	—	—	1-225550-3
225, 393	O Crimp	Gold	Silver	TEFLON	Mil Type	Weatherproof	**50.8** 2.000	220015-1	—	—	1-225550-2
9, 9A, 9B, 214	O Crimp	Gold	Silver	TEFLON	Mil Type	—	**50.8** 2.000	220015-1	—	—	225345-8
	O Crimp	Gold	Silver	TEFLON	Mil Type	Weatherproof	**50.8** 2.000	220015-1	—	—	225550-8
	O Crimp	Gold	Nickel	TEFLON	Mil Type	Weatherproof	**50.8** 2.000	220015-1	—	—	225555-8

[1] Order AMP PRO-CRIMPER Coaxial "O" Crimp Hand Tool assembly 58433-1, which includes dies 58435-1.
[2] Order AMP PRO-CRIMPER Coaxial Hex Crimp Hand Tool assembly 58433-2, which includes dies 58436-1.

For complete product information, order Catalog 1307191

Products for Industrial & Commercial Applications

Dimensions are shown for reference purposes only.

Dimensions are in inches and millimeters unless otherwise specified. Values in brackets are metric equivalents.

Specifications subject to change.

Technical Support Center
1-800-522-6752
www.tycoelectronics.com

Right-Angle Plugs, Crimp

O Crimp



Mil Type
O Crimp
Weatherproof

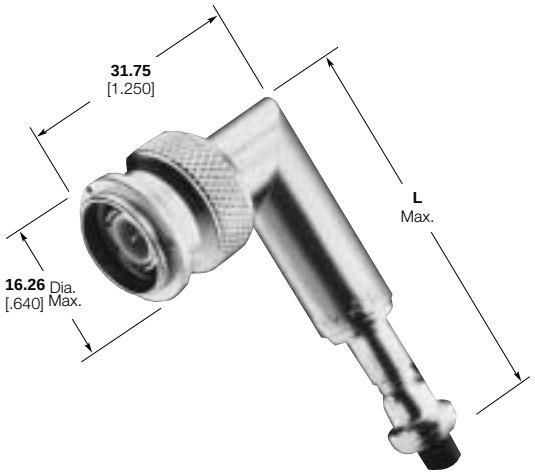

RG/U Cable	Termination Type	Center Contact Plating	Body Plating	Dielectric	Style	Comments	L Dim.	CERTI-CRIMP Hand Tool with Integral Die	Interchangeable Dies for PRO-CRIMPER Hand Tool 354940-1 or PRO-CRIMPER Adapter 679304-1	Part Numbers
174, 174A, 188 188A, 316	O Crimp	Gold	Nickel	Polymethyl-pentene	Commercial	—	**38.23** 1.505	—	318450-2	414173-3
RD 188, 316 Double Braid	O Crimp	Gold	Nickel	Polymethyl-pentene	Commercial	—	**38.23** 1.505	—	58539-1	414173-4
58, 58A, 58B 58C	O Crimp	Gold	Nickel	TEFLON	Mil Type	Weatherproof	**47.63** 1.875	220045-2	—	225559-2
58, 58A, 58B, 58C 141, 141A, 303	O Crimp	Gold	Nickel	Polymethyl-pentene	Commercial	—	**38.23** 1.505	—	220189-1	414173-1
55, 55A, 55B 223	O Crimp	Gold	Nickel	Polymethyl-pentene	Commercial	—	**38.23** 1.505	—	220189-1	414173-6
142, 142A, 142B 400	O Crimp	Gold	Nickel	Polymethyl-pentene	Commercial	—	**38.23** 1.505	—	220189-1	414173-5
	O Crimp	Gold	Silver	TEFLON	Mil Type	Weatherproof	**47.63** 1.875	220045-2	—	225554-6
124, 140, 210, 62 62A, 62B, 59, 59A 59B, Belden 9291 9209, 9269	O Crimp	Gold	Nickel	Polymethyl-pentene	Commercial	—	**38.23** 1.505	—	220189-2	414173-2
8, 8A, 213	O Crimp	Gold	Nickel	TEFLON	Mil Type	Weatherproof	**63.5** 2.500	220015-1	—	225559-8
393, 225	O Crimp	Gold	Silver	TEFLON	Mil Type	Weatherproof	**63.5** 2.500	220015-1	—	1-225554-1
9, 9A, 9B, 214	O Crimp	Gold	Silver	TEFLON	Mil Type	—	**59.52** 2.343	220015-1	—	225349-9

Jacks, Crimp

O Crimp

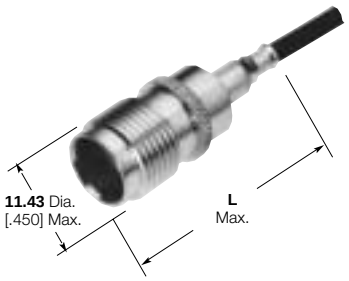

**Mil Type
O Crimp
Weatherproof**

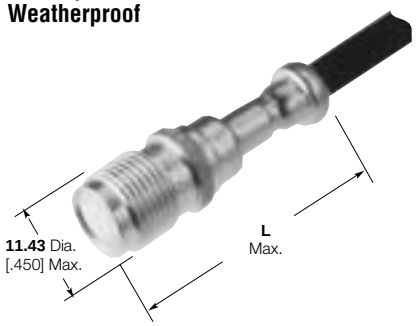

RG/U Cable	Termination Type	Center Contact Plating	Body Plating	Dielectric	Style	Comments	L Dim.	CERTI-CRIMP Hand Tool with Integral Die	Interchangeable Dies for PRO-CRIMPER Hand Tool 354940-1 or PRO-CRIMPER Adapter 679304-1	Part Numbers
174, 174A, 188 188A, 316	O Crimp	Gold	Nickel	Polymethyl-pentene	Commercial	—	**30.48** 1.200	—	318450-2	414171-3
RD 188, 316 Double Braid	O Crimp	Gold	Nickel	Polymethyl-pentene	Commercial	—	**30.48** 1.200	—	58539-1	414171-4
58, 58A, 58B 58C	O Crimp	Gold	Silver	TEFLON	Mil Type	Weatherproof	**35.72** 1.406	220045-2	—	225551-2
58, 58A, 58B, 58C 141, 141A, 303	O Crimp	Gold	Nickel	Polymethyl-pentene	Commercial	—	**29.85** 1.175	—	220189-1	414171-1
141, 141A, 303	O Crimp	Gold	Silver	TEFLON	Mil Type	Weatherproof	**35.72** 1.406	220045-2	—	225551-5
55, 55A, 55B 223	O Crimp	Gold	Nickel	Polymethyl-pentene	Commercial	—	**29.85** 1.175	—	220189-1	414171-6
	O Crimp	Gold	Silver	TEFLON	Mil Type	—	**35.72** 1.406	220045-2	—	225551-1
142, 142A, 142B 400	O Crimp	Gold	Nickel	Polymethyl-pentene	Commercial	—	**34.29** 1.350	—	220189-1	414171-5
	O Crimp	Gold	Silver	TEFLON	Mil Type	Weatherproof	**35.72** 1.406	220045-2	—	225551-6
124, 140, 210, 62 62A, 62B, 59, 59A 59B, Belden 9291 9209, 9269	O Crimp	Gold	Nickel	Polymethyl-pentene	Commercial	—	**29.85** 1.175	—	220189-2	414171-2

Bulkhead Jacks, Crimp

Single Crimp **O Crimp**

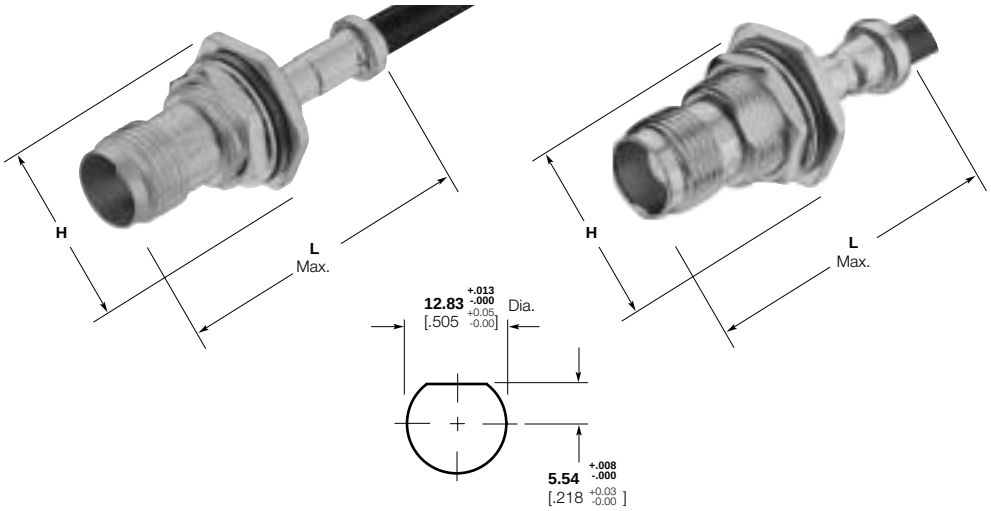

Maximum Panel Thickness Single Crimp **3.18** [.125];
Dual Crimp **6.35** [.250]

Recommended Panel Cutout

H= **11/16** [.6875] max. across flats, **20.32** [.800] max. across points.

RG/U Cable	Termination Type	Center Contact Plating	Body Plating	Dielectric	Style	Comments	L Dim.	CERTI-CRIMP Hand Tool with Integral Die	Interchangeable Dies for PRO-CRIMPER Hand Tool 354940-1 or PRO-CRIMPER Adapter 679304-1	Part Numbers
174, 174A, 316 188, 188A	O Crimp	Gold	Nickel	Polymethyl-pentene	Commercial	—	**34.93** 1.375	—	318450-2	414168-3
179, 179A, 179B 161, 187, 187A Belden 9221	Single Crimp	Gold	Nickel	TEFLON	Mil Type	—	**38.1** 1.500	69245-1	—	331238
RD 188, 316 Double Braid	O Crimp	Gold	Nickel	Polymethyl-pentene	Commercial	—	**34.93** 1.375	—	58539-1	414168-4
58, 58A, 58B, 58C	O Crimp	Gold	Nickel	TEFLON	Mil Type	Weatherproof	**38.1** 1.500	220045-2	—	225557-2
58, 58A, 58B, 58C 141, 141A, 303	O Crimp	Gold	Nickel	Polymethyl-pentene	Commercial	—	**34.93** 1.375	—	220189-1	414168-1
223 55, 55A, 55B	O Crimp	Gold	Nickel	Polymethyl-pentene	Commercial	—	**34.93** 1.375	—	220189-1	414168-6
142, 142A 142B, 400	O Crimp	Gold	Nickel	Polymethyl-pentene	Commercial	—	**34.93** 1.375	—	220189-1	414168-5
	O Crimp	Gold	Nickel	TEFLON	Mil Type	Weatherproof	**38.1** 1.500	220045-2	—	225557-6
120, 140, 210, 62, 62A, 62B, 59, 59A, 59B, Belden 9291, 9209, 9269	O Crimp	Gold	Nickel	Polymethyl-pentene	Commercial	—	**34.93** 1.375	—	220189-2	414168-2

Right-Angle PC Board/Panel Mount Jacks

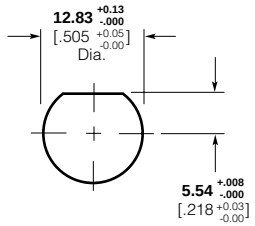

Maximum Panel Thickness **6.1** [.240]

Recommended Panel Cutout

VALOX Body

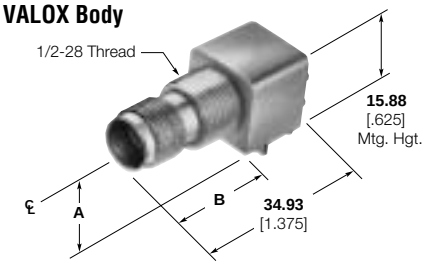

Metal Body

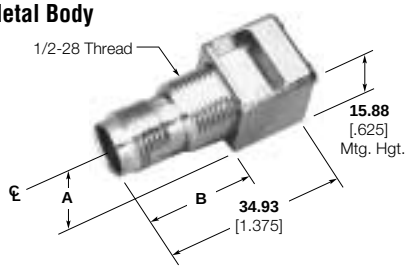

Body Material	Ω	Center Contact Plating	Dimensions A	Dimensions B	Part Numbers Without Mounting Posts	Part Numbers With Mounting Posts
VALOX, White	50	Gold	**8.56** .337	**21.21** .835	227812-1	227818-1
Metal	50	Gold	**8.26** .325	**20.83** .820	227838-1	227839-1

Without Mounting Posts

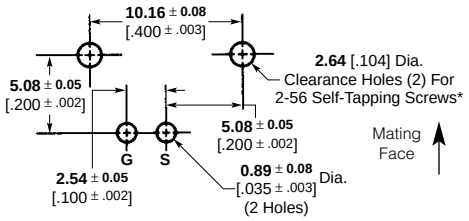

(Top View)

With Mounting Posts

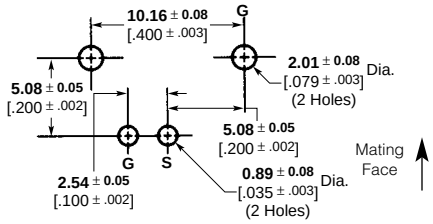

(Top View)

Recommended PC Board Layouts

Vertical PC Board/Panel Mount Jacks

*2-56 Self-Tapping Screws:
For 1.57 [3/32] or greater panel thickness
Part Number 221108-2
For less than 1.57 [3/32] panel thickness
Part Number 221108-4

VALOX Body

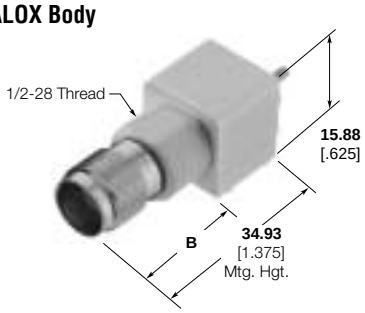

Metal Body

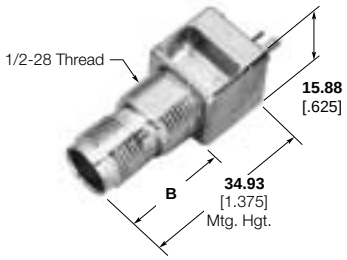

Lockwasher and Jam Nut



Part Number 1-329632-2

Part Number 1-329631-2

Body Material	Center Contact Plating	Dimension B	Part Numbers Without Mounting Posts	Part Numbers With Mounting Posts
VALOX, White	Gold	**21.21** .835	227816-1	227820-1
Metal	Gold	**20.83** .820	—	227835-1

Without Mounting Posts

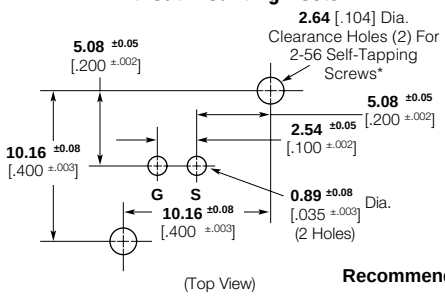

(Top View)

With Mounting Posts

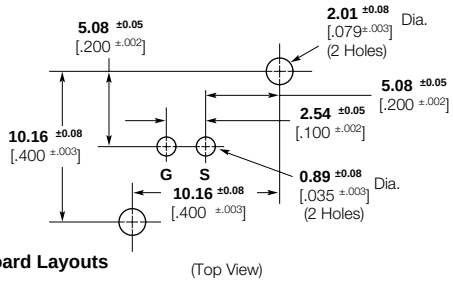

(Top View)

Recommended PC Board Layouts

For complete product information, order Catalog 1307191

Products for Industrial & Commercial Applications

Dimensions are shown for reference purposes only.

Dimensions are in inches and millimeters unless otherwise specified. Values in brackets are metric equivalents.

Specifications subject to change.

Technical Support Center
1-800-522-6752
www.tycoelectronics.com

Product Facts

- **Built-in chip capacitors filter high-frequency noise to panel ground**
- **PC board mounting with vertical and standard or low-profile right angle configurations**
- **Cable mount bulkhead BNC version available**
- **Drop-in replacement for AMP standard BNC printed circuit board connectors**
- **One-piece design and robotic capacity to reduce assembly time**



AMP Capacitively Decoupled connectors provide the fast, better way to reduce noise and reduce ground loops on coaxial interconnections. The high-frequency noise generated by fast rise times can cause both false triggering of circuits as well as emissions that can be radiated or conducted outside the equipment. Such emissions can interfere with nearby equipment. Ground loops are also a problem for networked systems. Ground loops are caused when two interconnected units are at different voltage potentials.

The typical way to handle such EMI and ground loop problems is to decouple the cable shield from the ground panel by soldering a ceramic disk capacitor between the cable shield and the panel. The capacitor shunts high-frequency noise to ground. While effective, this approach is time consuming and expensive.

The Capacitively Decoupled connector has built-in chip capacitors. These capacitors establish the electrical contact between the outer shield and a clip. This clip provides a short electrical path between the capacitors and panel. As a result, high-frequency noise is effectively shunted to ground, while the DC path is blocked.

The connectors offer compatibility in design and manufacture. The same footprint and dimensional envelope make them a drop-in replacement for AMP standard BNC or TNC printed circuit board connectors. In addition, they can be robotically picked and placed for high-speed automated assembly to pc boards.

Product Specification
108-1263 — BNC Decoupled PCB Press-Fit Connection
108-1269 — BNC Decoupled PCB Connectors

Products for Industrial & Commercial Applications

Dimensions are shown for reference purposes only.

Dimensions are in inches and millimeters unless otherwise specified. Values in brackets are metric equivalents.

Specifications subject to change.

Technical Support Center
1-800-522-6752
www.tycoelectronics.com

Product Facts

- **Built-in chip resistor terminates the signal line to the proper characteristic impedance when in the unmated state**
- **Can be ordered with standard resistance values (50, 75 and 100 Ohms)**
- **Fits into printed circuit board footprint of standard BNC PCB connectors**
- **One-piece design is compatible with robotic insertion and wave soldering**

AMP Self-Terminating printed circuit board BNC connectors provide the capability to automatically terminate an input-output port to the system characteristic impedance. This feature eliminates the need for external terminators when an I/O port is not being used. The Self-Terminating BNC jack contains a chip resistor which bridges the signal and ground paths when the connector is not mated to a BNC plug. When mated, the resistor is switched out of the circuit for direct signal transmission to the board.

The footprint of this connector is compatible with standard BNC connectors, allowing it to be easily installed into existing circuit board designs and suitable for robotic insertion for high speed automated assembly onto the PC board.

The Self-Terminating BNC is available in standard resistance values for use in networking and video systems. Contact Tyco Electronics for new designs that include switching and capacitively decoupled versions.

Material:

Body — Polyester, PBT, black
Dielectric — Polyester, PBT, natural

Plating:

Shell — Tin Lead
Center Contact — Gold on mating end and Tin Lead on solder tails

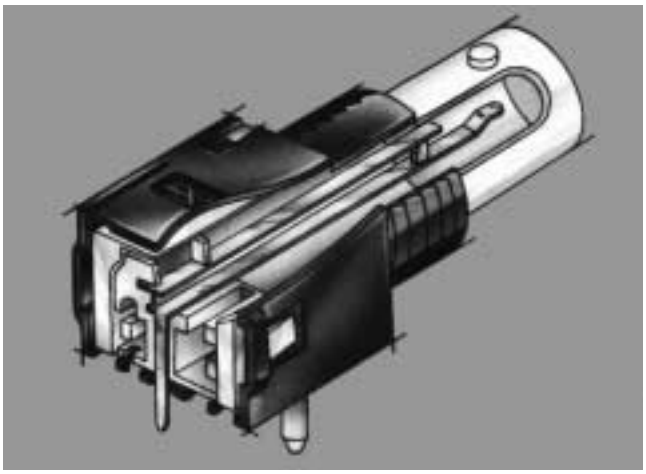

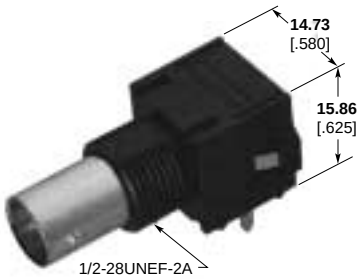

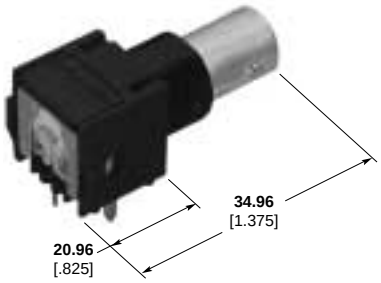

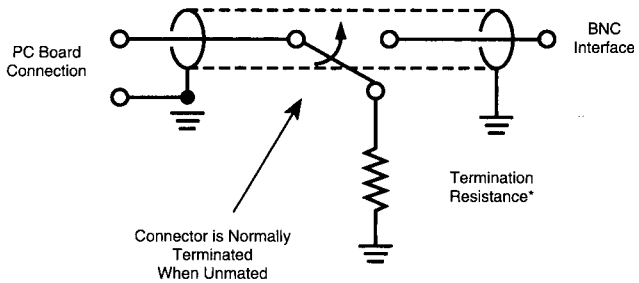

Product	Termination Resistance	Part Numbers
Self-Terminating BNC PCB	50Ω	414367-1
	75Ω	414367-2

For complete product information, order Catalog 1307191

Products for Industrial & Commercial Applications

Dimensions are shown for reference purposes only.

Dimensions are in inches and millimeters unless otherwise specified. Values in brackets are metric equivalents.

Specifications subject to change.

Technical Support Center
1-800-522-6752
www.tycoelectronics.com

Product Facts

- **Crimp connectors require only one-stroke crimping of both conductors, plus braid and cable support**
- **Lower installed cost with one-stroke crimp**
- **Reduced noise levels because of AMP solderless crimping techniques**
- **Captive inner contact stability**
- **No danger of heat damage to coaxial cable**
- **Ease of inspection**
- **Listed under the Component Program of Underwriters Laboratories Inc., File No. E81956**
- **PC Board soldered connectors are recognized under the Component Program of Underwriters Laboratories Inc., File No. E81956**
- **Certified by Canadian Standards Association File No. LR 7189**

Packaging — All connectors are packaged individually unless otherwise noted.

The Twin BNC Connector is a quick connect/disconnect, weatherproof connector designed in accordance with MIL-C-39012 to meet the stringent requirements of MIL-STD-1553 Multiplex Data Bus.

These twin coaxial cable connectors are a unique development by Tyco Electronics which has resulted in the production of high level RF components. Termination of these connectors to twin conductor cable is made with Tyco Electronics exclusive one crimp method which simultaneously terminates inner conductors, outer braid and cable support with one stroke of the matching AMP tool.

These rugged connectors accommodate today's most commonly used twin conductor cable sizes.

Material:

Brass — QQ-B-626
Beryllium Copper — QQ-C-530
TEFLON — MIL-P-19468
Polypropylene — General purpose
Copper, Annealed — QQ-C-576
Phosphor Bronze — QQ-B-750
Silicone Rubber — ZZ-R-765

Plating:

Silver — QQ-S-365
Nickel — QQ-N-290
Tin Lead — ASTM-B-545



Electrical Characteristics:

Nominal Impedance — Non-constant
Working Voltage — 500 volts rms sea level
Insulation Resistance — 5000 megohms min.
Dielectric Withstanding Voltage — 1500 volts rms sea level

Mechanical Characteristics:

Mating/Unmating — Bayonet lock-quick connect/ disconnect
Cable Attachment — Crimp type - Simultaneous center and braid
Coupling Nut Retention — 100 lbs. [444 N] min.
Cable Retention — 25 lbs. [111 N] min., RG-108A/U cable
Durability — 200 cycles per MIL-C-39012

Environmental Characteristics:

Temperature Range — -55°C to +85°C
Vibration — MIL-STD-202, Method 204, Condition B
Shock — MIL-STD-202, Method 213, Condition I, 100 G's
Salt Spray — MIL-STD-202, Method 101, Condition B
Temperature Cycling — MIL-STD-202, Method 102, Condition C

Product Facts

- **Designated connectors are MIL-C-39012, Class II, Category B qualified**
- **Captive center contacts**
- **Completely crimpable application – one hand tool crimps all cables with single or double braided shields of a given size**
- **Impedance matching crimps**
- **Broad band performance – low VSWR**
- **Superior cable retention**
- **TEFLON dielectric**
- **Silver or nickel finish**
- **Fully intermateable with MIL-C-39012 connectors**
- **Listed under the Component Program of Underwriters Laboratories Inc., File No. E81956**
- **Recognized under the Component Program of Underwriters Laboratories Inc., File No. E81956**
- **Certified by Canadian Standards Association File No. LR 7189**

The AMP N Connector, featuring a 15.88 [5/8] - 24 threaded coupling for optimum stability, is highly suited for critical applications and environments. This medium sized connector can withstand shock and vibration to assure a low noise level and has a constant impedance of 50 ohms. It also features a captive center contact and provides excellent performance at frequencies up to 11 GHz, with voltages to 1000 volts rms.

This Tyco Electronics connector offers the added benefits of low overall applied cost with a labor-saving two-crimp assembly. The contact is simply crimped to the cable's center conductor, then both braid and cable support are simultaneously crimped to complete the termination.

N Series Connectors are available in standard plug, jack, panel jack, bulkhead jack and right-angle plug configurations. Those connectors with a military designation (M39012) are furnished in accordance with all requirements of specification MIL-C-39012, Class II, Category B.

Material:

Brass — QQ-B-626
Beryllium Copper — QQ-C-530
Dielectric — TEFLON
TEFLON — MIL-P-19468
Copper, Annealed — QQ-C-576
Phosphor Bronze — QQ-B-750
Silicone Rubber — ZZ-R-765

Plating:

Body —
Silver per QQ-S-365
Nickel per QQ-N-290
Center Contact —
Gold per MIL-B-45204



Electrical Characteristics:

Nominal Impedance — 50 ohms
Working Voltage — 1000 volts, rms at sea level
Frequency Range — 0 to 11 GHz
Voltage Standing Wave Ratio (VSWR) —
Straight Plug or Jack— 1.3:1 max.
Right-Angle Plug—
1.35 max. at 0 to 9.0 GHz
1.50 max. at 9.0 to 11.0 GHz
Contact Resistance —
Outer Contact — 0.2 milliohms
Center Contact — 1.0 milliohms
Right-Angle — 2.5 milliohms
Insulation Resistance — 5000 megohms min.
Dielectric Withstanding Voltage — 2500 Volts, rms at sea level
RF Leakage — Mil Type, -90 dB min. at 2 to 3 GHz
RF Insertion Loss — Mil Type, 0.15 dB max. at 10 GHz
Right-Angle Plug, 0.3 dB max. at 10 GHz
Corona Level — Mil Type, 500 volts min. at 21 336 m [70,000 ft.]
Terminator —
Resistance — 50 ohms ±1%
Power Rating — 1.0 watt max.

Mechanical Characteristics:

Mating/Unmating — Threaded coupling
Cable Attachment — Crimp type - center contact and braid
Coupling Nut Retention — 445 N [100 lbs.] min.
Cable Retention — 400 N [90 lbs.] min. RG 214/U Cable
Durability — 500 cycles per MIL-C-39012
Captive Contact — 27 N [6 lbs.] min. axial retention, either direction

Environmental Characteristics:

Temperature Range —
Mil Type, -65°C to +165°C
Commercial, -55°C to +85°C
Vibration — MIL-STD-202, Method 204, Test Cond. B
Shock — MIL-STD-202, Method 213, Test Cond. I
Moisture Resistance — MIL-STD-202 Method 106
Salt Spray — MIL-STD-202, Method 101, Test Cond B
Temperature Cycling — MIL-STD-202, Method 107, Test Cond. B (except high temperature is +85°C)
Note: All data pertains to use with MIL-C-39012 specified cables only.

For complete product information, order Catalog 1307191

Products for Industrial & Commercial Applications

Dimensions are shown for reference purposes only.

Dimensions are in inches and millimeters unless otherwise specified. Values in brackets are metric equivalents.

Specifications subject to change.

Technical Support Center
1-800-522-6752
www.tycoelectronics.com

Plugs

Mil Type Dual Crimp

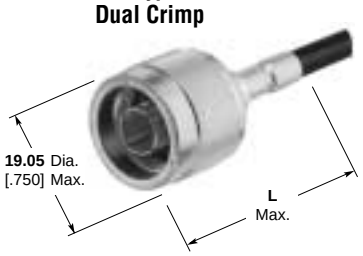

Semi-Rigid Cable

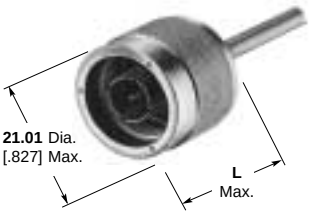

Hex Dual Crimp



RG/U Cable	Termination Type	Body Plating	M39012/ Military No. and/ or Comments	L Dim.	Integral Die Hand Tool	Hex Across Flats Center	Hex Across Flats Braid	Part Numbers
58, 58A, 58B, 58C	O Crimp	Nickel	Knurl Collar	**42.85** 1.687	220045-2	—	—	1-225661-2*
	O Crimp	Silver	Knurl Collar	**42.85** 1.687	220045-2	—	—	225361-1*
58A,58C	Hex Crimp	Nickel	Knurl Collar	**39.40** 1.550	58436-1**	**1.73** .068	**5.41** .213	415232-2
223, 55, 55A, 55B	O Crimp	Nickel	Knurl Collar	**42.85** 1.687	220045-2	—	—	1-225661-3*
	O Crimp	Silver	Knurl Collar	**42.85** 1.687	220045-2	—	—	225361-2*
142, 142A 142B, 400	O Crimp	Nickel	Knurl Collar	**42.85** 1.687	220045-2	—	—	1-225661-5*
	O Crimp	Silver	Knurl Collar	**42.85** 1.687	220045-2	—	—	225361-4*
142, 142A 142B	Hex Crimp	Nickel	Hex Collar	**39.40** 1.550	58436-1**	**1.73** .068	**5.41** .213	415232-3
			Knurl Collar	**39.40** 1.550	58436-1**	**1.73** .068	**5.41** .213	415232-4
115A, Belden 89880, 9880	O Crimp	Nickel	Knurl Collar	**42.85** 1.687	220015-1	—	—	225092-8
Belden 9880	Hex Crimp	Nickel	Hex Collar	**39.40** 1.550	58485-1**	**2.54** .100	**10.90** .429	415232-9
			Knurl Collar	**39.40** 1.550	58485-1**	**2.54** .100	**10.90** .429	1-415232-0
402 Semi Rigid (.141)	Solder	Nickel	Knurl Collar	**24.6** .970	—	—	—	1057088-1
405 Semi Rigid (.085)	Solder	Nickel	Knurl Collar	**24.6** .970	—	—	—	1057094-1
8, 8A, 213	O Crimp	Nickel	Knurl Collar	**42.85** 1.687	220015-1	—	—	1-227086-0
	O Crimp	Nickel	Knurl Collar	**42.85** 1.687	220015-1	—	—	225661-2
	O Crimp	Silver	01B0007 Knurl Collar	**42.85** 1.687	220015-1	—	—	51692-2
8, 213	Hex Crimp	Nickel	Hex Collar	**39.40** 1.550	58485-1**	**2.54** .100	**10.90** .429	415232-5
			Knurl Collar	**39.40** 1.550	58436-1**	**2.54** .100	**10.90** .429	415232-6
11, 11A, 216	O Crimp	Silver	01B0013 Knurl Collar	**42.85** 1.687	220015-1	—	—	51692-4
Belden 9292	O Crimp	Nickel	—	**47.22** 1.859	220015-1	—	—	1-225662-8
393	Hex Crimp	Nickel	Hex Collar	**39.40** 1.550	58485-1**	**2.54** .100	**10.90** .429	1-415232-1
Belden 8214	O Crimp	Nickel	Knurl Collar	**42.85** 1.687	220015-1	—	—	1-225661-6
9, 9A, 9B, 214	O Crimp	Nickel	Knurl Collar	**42.85** 1.687	220015-1	—	—	225661-1
	O Crimp	Silver	01B0008 Knurl Collar	**42.85** 1.687	220015-1	—	—	51692-1
	O Crimp	Nickel	Knurl Collar	**42.85** 1.687	220015-1	—	—	1-227086-1
9, 214	Hex Crimp	Nickel	Hex Collar	**39.40** 1.550	58485-1**	**2.54** .100	**10.90** .429	415232-7
			Knurl Collar	**39.40** 1.550	58485-1**	**2.54** .100	**10.90** .429	415232-8

*Hand Tool 69710-1, with Die Insert 220062-1, is available to terminate these connectors. The 626 Pneumatic tool system can also be used.
**Die Set Crimp Tool — PRO-CRIMPER II Hand Tool, P/N 354940-1 or 626 Series Pneumatic Tool with 679304-1.

For complete product information, order Catalog 1307191

Products for Industrial & Commercial Applications

Dimensions are shown for reference purposes only.

Dimensions are in inches and millimeters unless otherwise specified. Values in brackets are metric equivalents.

Specifications subject to change.

Technical Support Center
1-800-522-6752
www.tycoelectronics.com

Right-Angle Plugs, Crimp

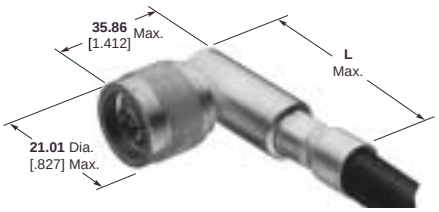

RG/U Cable	Termination Type	Body Plating	M39012/ Military No. and/ or Comments	L Dim.	Integral Die Hand Tool	Hex Across Flats		Part Numbers
						Center	Braid	
58A, 58C	Hex Crimp	Nickel	Hex Collar	**57.79** 2.275	58436-1*	**1.73** .068	**5.41** .213	415255-1
142, 142A, 142B	Hex Crimp	Nickel	Hex Collar	**57.79** 2.275	58436-1*	**1.73** .068	**5.41** .213	415255-2
8, 8A, 213	O Crimp	Nickel	Knurl Collar	**57.79** 2.275	220015-1	—	—	225669-2
	O Crimp	Silver	05B0002 Knurl Collar	**57.79** 2.275	220015-1	—	—	225014-2
8, 213	Hex Crimp	Nickel	Hex Collar	**57.79** 2.275	58485-1*	**2.54** .100	**10.90** .429	415255-3
393	Hex Crimp	Nickel	Hex Collar	**57.79** 2.275	58485-1*	**2.54** .100	**10.90** .429	415255-6
9, 9A, 9B 214	O Crimp	Nickel	Knurl Collar	**57.79** 2.275	220015-1	—	—	225669-1
	O Crimp	Silver	05B0003 Knurl Collar	**57.79** 2.275	220015-1	—	—	225014-3
9, 214	Hex Crimp	Nickel	Hex Collar	**57.79** 2.275	58485-1*	**2.54** .100	**10.90** .429	415255-4
Belden 9880	Hex Crimp	Nickel	Hex Collar	**57.79** 2.275	58485-1*	**2.54** .100	**10.90** .429	415255-5

*Crimp Tool — PRO-CRIMPER II Hand Tool, P/N 354940-1 or 626 Series Pneumatic Tool with 679304-1.

Jacks, Crimp



RG/U Cable	Termination Type	Body Plating	M39012/ Military No. and/ or Comments	L Dim.	Integral Die Hand Tool	Hex Across Flats		Part Numbers
						Center	Braid	
58A, 58C	Hex Crimp	Nickel	—	**41.28** 1.625	58436-1**	**1.73** .068	**5.41** .213	415242-1
142, 142A, 142B, 400	O Crimp	Nickel	—	**44.84** 1.765	220045-2**	—	—	1-225663-5*****
142, 142A, 142B	Hex Crimp	Nickel	—	**41.28** 1.625	58436-1**	**1.73** .068	**5.41** .213	415242-2
8, 8A, 213	O Crimp	Silver	02B0008	**49.2** 1.937	220015-1	—	—	225093-2
8, 213	Hex Crimp	Nickel	—	**41.28** 1.625	58485-1**	**2.54** .100	**10.90** .429	415242-3
9, 9A, 9B, 214	O Crimp	Silver	02B0009	**49.2** 1.937	220015-1	—	—	225093-1
9, 214	Hex Crimp	Nickel	—	**41.28** 1.625	58485-1**	**2.54** .100	**10.90** .429	415242-4
Belden 9880	Hex Crimp	Nickel	—	**41.28** 1.625	58485-1**	**2.54** .100	**10.90** .429	415242-5
393	Hex Crimp	Nickel	—	**41.28** 1.05	58485-1**	**2.54** .100	**10.90** .429	415242-6
402 Semi Rigid (.141)	Solder	Nickel	—	**26.7** 1.625	—	—	—	1057116-1
405 Semi Rigid (.085)	Solder	Nickel	—	**26.7** 1.05	—	—	—	1057119-1

*Hand Tool 69710-1, with Die Insert 220062-1, is available to terminate these connectors. The 626 Pneumatic tool system can also be used.
**Die Set Crimp Tool — PRO-CRIMPER II Hand Tool, P/N 354940-1 or 626 Series Pneumatic Tool with 679304-1.

For complete product information, order Catalog 1307191

Products for Industrial & Commercial Applications

Dimensions are shown for reference purposes only.

Dimensions are in inches and millimeters unless otherwise specified. Values in brackets are metric equivalents.

Specifications subject to change.

Technical Support Center
1-800-522-6752
www.tycoelectronics.com

Bulkhead Jacks, Crimp



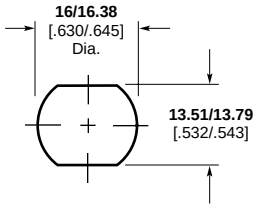

Maximum Panel Thickness **6.35** [.250]

Recommended Panel Cutout

RG/U Cable	Termination Type	Body Plating	L Dim.	Integral Die Hand Tool	Hex Across Flats		Part Numbers
					Center	Braid	
58, 58A, 58B, 58C	O Crimp	Silver	**49.6** 1.953	220045-2	—	—	225363-1*
58A, 58C	Hex Crimp	Nickel	**45.72** 1.800	58436-1**	**1.73** .068	**5.41** .213	415248-1
223, 55, 55A, 55B	O Crimp	Silver	**49.6** 1.953	220045-2	—	—	225363-2*
142, 142A, 142B, 400	O Crimp	Silver	**49.6** 1.953	220045-2	—	—	225363-4*
142, 142A, 142B	Hex Crimp	Nickel	**45.72** 1.800	58436-1**	**1.73** .068	**5.41** .213	415248-2
124, 140, 210, 62, 62A, 62B, 59, 59A, 59B, Belden 9291, 9209, 9269, 89269	O Crimp	Silver	**45.21** 1.780	220045-3	—	—	225363-6
	O Crimp	Nickel	**49.61** 1.953	220045-3	—	—	1-225667-6
Belden 9880	Hex Crimp	Nickel	**45.72** 1.800	58485-1**	**2.54** .100	**10.90** .429	415248-5
8, 213	Hex Crimp	Nickel	**45.72** 1.800	58485-1**	**2.54** .100	**10.90** .429	415248-3
393	Hex Crimp	Nickel	**45.72** 1.800	58485-1**	**2.54** .100	**10.90** .429	415248-6
9, 214	Hex Crimp	Nickel	**45.72** 1.800	58485-1**	**2.54** .100	**10.90** .429	415248-4
9, 9A, 9B 214	O Crimp	Nickel	**49.61** 1.953	220015-1	—	—	225667-1

*Hand Tool 69710-1, with Die Insert 220062-1, is available to terminate these connectors. The 626 Pneumatic tool system can also be used.
**Crimp Tool — PRO-CRIMPER II Hand Tool, P/N 354940-1 or 626 Series Pneumatic Tool with 679304-1.

Bulkhead Jacks for Semi-Rigid Cable

Rear Mount



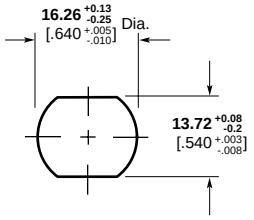

Maximum Panel Thickness **6.35** [.250]

Recommended Panel Cutout

Front Mount

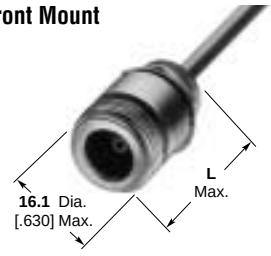

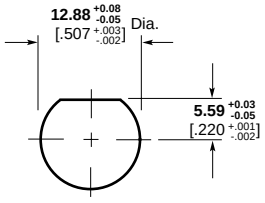

Maximum Panel Thickness **6.35** [.250]

Recommended Panel Cutout

RG/U Cable	Termination Type	Body Plating	M39012/ Military No. and/or Comments	L Dim.	Integral Die Hand Tool	Part Numbers
402 Semi-Rigid/.141	Crimp	Nickel	Rear Mount	**29.37** 1.156	*	228658-1
	Crimp	Nickel	Front Mount	**29.37** 1.156	*	228448-1
	Solder	Nickel	Rear Mount	**25.4** 1.00	—	1057176-1
405 Semi-Rigid/.085	Solder	Nickel	Rear Mount	**33.9** 1.335	—	1057165-1

*Tooling—Hand Tool No. 59980-1, Requires (2) Crimping Dies No. 312253-1 and (1) Locator No. 220220-2.

For complete product information, order Catalog 1307191

Products for Industrial & Commercial Applications

Dimensions are shown for reference purposes only.

Dimensions are in inches and millimeters unless otherwise specified. Values in brackets are metric equivalents.

Specifications subject to change.

Technical Support Center
1-800-522-6752
www.tycoelectronics.com

Jack, Panel Mount



RG/U Cable	Termination Type	Body Plating	L Dim.	Die Set	Hex Across Flats		Part Numbers
					Center	Braid	
58A, 58C	Hex Crimp	Nickel	**41.28** 1.625	58436-1	**1.73** .068	**5.41** .213	415252-1
142, 142A, 142B	Hex Crimp	Nickel	**41.28** 1.625	58436-1	**1.73** .068	**5.41** .213	415252-2
8, 213	Hex Crimp	Nickel	**41.28** 1.625	58485-1	**2.54** .100	**10.90** .429	415252-3
9, 214	Hex Crimp	Nickel	**41.28** 1.625	58485-1	**2.54** .100	**10.90** .429	415252-4
Belden 9880	Hex Crimp	Nickel	**41.28** 1.625	58485-1	**2.54** .100	**10.90** .429	415252-5

*Crimp Tool — PRO-CRIMPER II Hand Tool, P/N 354940-1 or 626 Series Pneumatic Tool with 679304-1.

Feed-Thru Jack Adapter

Plating:

Body — Nickel
Dielectric — General purpose polypropylene
Contact — Gold plated

Part Number 227945-2



Inter-Series Adapters

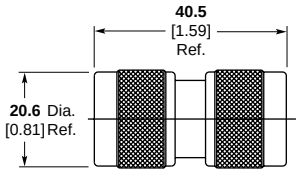

Part Number 1311318-1
M/A-COM Model No. N15P10E999X

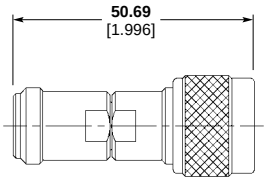

Part Number 1057374-1
M/A-COM Model No. 3082-0000-10

Body Plating	Contact	Dielectric	M/A-COM Model No.	Part Numbers
White bronze	Gold	Teflon	N15P10E999X	1311318-1
Stainless steel/ passivate	Gold	Teflon	3082-0000-10	1057374-1

For complete product information, order Catalog 1307191

Products for Industrial & Commercial Applications

Dimensions are shown for reference purposes only.

Dimensions are in inches and millimeters unless otherwise specified. Values in brackets are metric equivalents.

Specifications subject to change.

Technical Support Center
1-800-522-6752
www.tycoelectronics.com

Product Facts

- **Designs meet SCTE requirements where applicable**
- **Plugs, jacks and adapters available**
- **Board mount and cable mount available**
- **Surface mount connectors available**
- **Sealed product available**
- **High current carrying capabilities**



AMP F Series connectors offer performance, which is driven by evolving OEM requirements and expectations. Improved VSWR beyond 1 GHz, high current carrying capability, and pressure sealed products are now part of the standard product offering. Designs compliant with SCTE, Bellcore, UL/CSA, and various other industry and agency standards are also available.

Both cable applied and PCB terminated products are offered in a variety of styles. The cable connectors are designed for fast, accurate termination with tools common to the industry. Application cost reductions can be achieved using AMP PCB terminated products; press-fit designs eliminate the need for soldering.

Center of gravity control and PCB retention designs prevent tipping and eliminate fixturing during soldering. Integral mechanical keys and “D flats” prevent rotation in panels.

These products provide the highly reliable, cost-effective solutions demanded by today’s evolving marketplace.

Technical Documents:

Product Specifications

108-1518 — Connector Coaxial, F Series, RF, Single Crimp Plug
108-1643 — Connector Coaxial, F Series, RF, PCB Mounted
108-1755 — Connector Economy, F Series, RF Coaxial, PCB
108-1757 — Connector, 15 amp, G Series Jack, PCB
108-1758 — Connector, F Series Jack, PCB, Surface Mount
108-1629 — Feedthrough, Sealed F Port Jack

Instruction Sheets

408-9221 — Coaxial Series F Plug Connectors
408-4402 — Series F & G Coaxial Cable Bulkhead Jack Connector
408-4291 — Pro-Crimper II Hand Tool Assembly 58622-1 and 58622-2

For complete product information, order Catalog 1307191

Products for Industrial & Commercial Applications

Dimensions are shown for reference purposes only.

Dimensions are in inches and millimeters unless otherwise specified. Values in brackets are metric equivalents.

Specifications subject to change.

Technical Support Center
1-800-522-6752
www.tycoelectronics.com

Product Facts

- **Performance to 12.4 GHz**
- **Available in various base metal options, including stainless steel, brass and zinc diecast**
- **Uses industry standard crimp tools and processes**
- **Available with corrosion resistant, non-magnetic White Bronze plating**
- **Meets all performance requirements for MIL-C-39012.**



Tyco Electronics offers a complete line of SMA connectors designed for performance to 18 GHz. The SMA product line offers stainless steel bodies, as well as non-ferrous metals. Various plating options are available, including Gold and White Bronze. The SMA interface is fully compatible with Mil-C-39012.

The SMA series meets the performance, quality and application requirements of the commercial marketplace. This includes White Bronze plating, a unique finish developed by Tyco Electronics to address applications requiring a non-magnetic plating. This plating is highly resistant to wear, and contains no ferrous metals, thus displaying excellent intermodulation characteristics.

To satisfy the broad range of commercial applications, SMA connectors are available in a broad range of standard configurations including; straight and right angle cable applied plugs, bulkhead cable jacks, two and four hole flange mount panel jacks, straight and right angle pcb mount jacks and various between and in series adapters. Numerous packaging and testing options are also available to meet specific system criteria as well.

Additionally, standard military approved (QPL) interfaces are offered as well. Including connectors for semi-rigid cable and micro strip applications.

The 3 Piece SMA offering is designed especially for applications in cellular infrastructure where Inter-Modulation Products (IMP) must be minimized. By limiting non-linearities within the connectors, IMP is reduced and increased channel capacity can be offered.

Electrical

Connector Type	Cable	Frequency Max. (GHz)	VSWR x (fGHz)	Contact Resistance (milliohms max.)		Insulation Resistance (megohms min.)	Dielectric Withstanding Voltage (Volts RMS)	Corona Extinction Voltage at 70,000 Ft. (V RMS min.)	RF Transmission Loss	RF High Potential at 5 MHz (V RMS)	RF Leakage (dB min.)
				Center Contact	Outer Contact						
Straight Cable Plug without Contact	RG-402 (3.58 [.141])	Note 1	1.02 + .005	N/A	2.0	10,000	N/A	250	N/A	670	-(90-fGHz)
Straight Cable Plugs & Jacks Solder Attachment	RG-405 (2.16 [.085])	18.0	1.05 + .005	2.0	2.0	10,000	1000	250	$.03\sqrt{f(GHz)}$	670	-(90-fGHz)
	RG-402 (3.58 [.141])	18.0	1.05 + .005	2.0	2.0	10,000	1500	375	$.03\sqrt{f(GHz)}$	1000	-(90-fGHz)
	3.58 [.141] Microporous	18.0	1.05 + .005	2.0	2.0	10,000	1500	375	$.03\sqrt{f(GHz)}$	1000	-(90-fGHz)
	RG-401 (6.35 [.250])	18.0	1.07 + .007	2.0	2.0	10,000	1500	375	$.03\sqrt{f(GHz)}$	1000	-(90-fGHz)
	RG-174, 188, 316	Note 1	1.15 + .01	2.0	2.0	10,000	750	190	$.06\sqrt{f(GHz)}$	500	-(60-fGHz)
	RG-55, 58, 141, 142, 223, 303, 400	Note 1	1.10 + .005	2.0	2.0	10,000	1000	250	$.06\sqrt{f(GHz)}$	670	-(60-fGHz)
Straight Cable Plugs & Jacks Solder Clamp Attachment	RG-405 (2.16 [.085])	12.4	1.10 + .015	2.0	2.0	10,000	1000	250	$.03\sqrt{f(GHz)}$	670	-(90-fGHz)
	RG-402 (3.58 [.141])	12.4	1.07 + .01	2.0	2.0	10,000	1500	375	$.03\sqrt{f(GHz)}$	1000	-(90-fGHz)
Straight Cable Plugs & Jacks Clamp Attachment	RG-55, 58, 141, 142 223, 400	Note 1	1.10 + .005	2.0	2.0	10,000	1000	250	$.06\sqrt{f(GHz)}$	670	-(60-fGHz)
	RG-174, 188, 316	Note 1	1.15 + .01	2.0	2.0	10,000	750	190	$.06\sqrt{f(GHz)}$	500	-(60-fGHz)
	RG-180, 195	Note 1	—	2.0	2.0	10,000	750	190	—	500	-(60-fGHz)
Straight Cable Plugs & Jacks Crimp Attachment	RG-55, 142, 223, 400	Note 1	1.10 + .005	2.0	2.0	10,000	1000	250	$.06\sqrt{f(GHz)}$	670	-(60-fGHz)
	RG-58, 141, 303	Note 1	1.10 + .005	2.0	2.0	10,000	1000	250	$.06\sqrt{f(GHz)}$	670	-(60-fGHz)
	RG-174, 188, 316	Note 1	1.15 + .01	2.0	2.0	10,000	750	190	$.06\sqrt{f(GHz)}$	500	-(60-fGHz)
	RG-180, 195	Note 1	—	2.0	2.0	10,000	750	190	—	500	-(60-fGHz)
	RG-178, 196	Note 1	1.2 + .02	2.0	2.0	10,000	500	125	$.06\sqrt{f(GHz)}$	335	-(60-fGHz)
Straight Cable Plugs & Jacks Compression Clamp Attachment	RG-401 (6.35 [.250])	18.0	1.07 + .01	2.0	2.0	10,000	1500	375	$.05\sqrt{f(GHz)}$	1000	-70 dB min.
	6.35 [.250] Microporous	18.0	1.07 + .01	2.0	2.0	10,000	1500	375	$.05\sqrt{f(GHz)}$	1000	-70 dB min.
	6.35 [.250] 3 Spline	18.0	1.07 + .01	2.0	2.0	10,000	1500	375	$.05\sqrt{f(GHz)}$	1000	-70 dB min.
	6.35 [.250] 5 Spline	18.0	1.07 + .01	2.0	2.0	10,000	1500	375	$.05\sqrt{f(GHz)}$	1000	-70 dB min.
Right Angle Cable Plugs Solder Attachment	RG-405 (2.16 [.085])	12.4	1.18 + .015	2.0	2.0	10,000	1000	250	$.04\sqrt{f(GHz)}$	670	-(90-fGHz)
	RG-405 (2.16 [.085])	18.0	1.18 + .015	2.0	2.0	10,000	1000	250	$.04\sqrt{f(GHz)}$	670	-(90-fGHz)
	RG-402 (3.58 [.141])	12.4	1.15 + .015	2.0	2.0	10,000	1500	325	$.04\sqrt{f(GHz)}$	1000	-(90-fGHz)
	RG-402 (3.58 [.141])	18.0	1.10 + .010	2.0	2.0	10,000	1500	250	$.05\sqrt{f(GHz)}$	1000	-(90-fGHz)
	RG-55, 58, 141, 142, 223, 303, 400	Note 1	1.15 + .01	2.0	2.0	10,000	1000	250	$.07\sqrt{f(GHz)}$	670	-(60-fGHz)
	RG-174, 188, 316	Note 1	1.15 + .02	2.0	2.0	10,000	750	190	$.07\sqrt{f(GHz)}$	500	-(60-fGHz)
Right Angle Cable Plugs Crimp Attachment	RG-55, 142, 223, 400	Note 1	1.15 + .02	2.0	2.0	10,000	1000	250	$.07\sqrt{f(GHz)}$	670	-(60-fGHz)
	RG-58, 141, 303	Note 1	1.15 + .02	2.0	2.0	10,000	1000	250	$.07\sqrt{f(GHz)}$	670	-(60-fGHz)
	RG-174, 188, 316	Note 1	1.18 + .02	2.0	2.0	10,000	750	190	$.07\sqrt{f(GHz)}$	500	-(60-fGHz)
	RG-180, 195	Note 1	—	2.0	2.0	10,000	750	190	—	500	-(60-fGHz)
	RG-178, 196	Note 1	1.25 + .025	2.0	2.0	10,000	500	125	$.07\sqrt{f(GHz)}$	335	-(60-fGHz)
Right Angle Cable Plugs Clamp Attachment	RG-55, 58, 141, 142, 223, 303	Note 1	1.10 + .005	2.0	2.0	10,000	1000	250	$.08\sqrt{f(GHz)}$	670	-(60-fGHz)
	RG-174, 188, 316	Note 1	1.15 + .01	2.0	2.0	10,000	750	190	$.08\sqrt{f(GHz)}$	500	-(60-fGHz)
	RG-180, 195	Note 1	—	2.0	2.0	10,000	750	190	—	500	-(60-fGHz)
Flange Mount Plugs & Jacks Panel or Bulkhead Mount	Non-Captured	18.0	1.03 + .004	2.0	2.0	10,000	1000	250	$.03\sqrt{f(GHz)}$	670	-(100-fGHz)
	Epoxy Captured	18.0	1.05 + .005	2.0	2.0	10,000	1000	250	$.03\sqrt{f(GHz)}$	670	-(60-fGHz)
	Mechanical Capture	18.0	1.04 + .004	2.0	2.0	10,000	1000	250	$.03\sqrt{f(GHz)}$	670	-(100-fGHz)
	Field Replaceable Hermetic Launchers	18.0	1.04 + .006	2.0	2.0	10,000	1000	250	$.04\sqrt{f(GHz)}$	670	-(100-fGHz)
Bulkhead Feedthrough Jacks	Epoxy Captured	18.0	1.07 + .010	2.0	2.0	10,000	1000	250	$.04\sqrt{f(GHz)}$	670	-(60-fGHz)
	Mechanical Capture	18.0	1.07 + .010	2.0	2.0	10,000	1000	250	$.04\sqrt{f(GHz)}$	670	-(100-fGHz)
Right Angle Flange Mount Jacks	N/A	18.0	1.07 + .015	2.0	2.0	10,000	1000	250	$.08\sqrt{f(GHz)}$	670	-(90-fGHz)
	N/A	12.4	1.15 + .015	2.0	2.0	10,000	1000	250	$.08\sqrt{f(GHz)}$	670	-(90-fGHz)
Printed Circuit Board Mount Straight Terminal	N/A	18.0	N/A	2.0	2.0	10,000	1000	250	N/A	670	N/A
Right Angle Printed Circuit	N/A	12.4	N/A	2.0	2.0	10,000	1000	250	N/A	670	N/A
End Launch Stripline Circuit	N/A	18.0	1.05 + .005	2.0	2.0	10,000	1000	250	$.03\sqrt{f(GHz)}$	670	-(60-fGHz)
Surface Launch Stripline Circuit	N/A	18.0	1.05 + .005	2.0	2.0	10,000	1000	250	$.03\sqrt{f(GHz)}$	670	-(60-fGHz)
Right Angle Surface Launch Stripline Circuit	N/A	12.4	1.15 + .015	2.0	2.0	10,000	1000	250	$.08\sqrt{f(GHz)}$	670	-(60-fGHz)
	N/A	18.0	1.07 + .015	2.0	2.0	10,000	1000	250	$.08\sqrt{f(GHz)}$	670	-(60-fGHz)

[1] Maximum operating frequency of cable per MIL-C-17.
[2] Specifications do not apply to hermetic or compression crimp connectors.
[3] For Brass SMA: Frequency Range DC-6GHz, Impedance 50 Ohms, Insulation Resistance.

For complete product information, order Catalog 1307191

Products for Industrial & Commercial Applications

Dimensions are shown for reference purposes only.

Dimensions are in inches and millimeters unless otherwise specified. Values in brackets are metric equivalents.

Specifications subject to change.

Technical Support Center
1-800-522-6752
www.tycoelectronics.com

Direct Solder Attachment, Semi-Rigid Cable Connectors

Straight Cable Plug



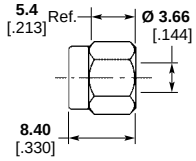

Cable Type RG/U	Body Material & Finish	Contact Captivation	Contact Attachment	Solder Assembly Kit Part Numbers	Instruction Sheet	M/A-COM Model Numbers	Part Numbers
402 (3.58 [.141])	Stainless, Pass.	No Center Contact	No Center Contact	1055420-1	408-4761	2001-7941-02	1050757-1

Straight Cable Plug



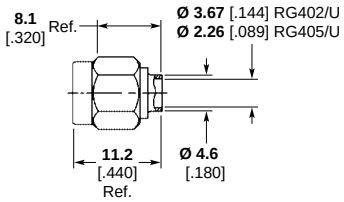

Cable Type RG/U	Body Material & Finish	Contact Captivation	Contact Attachment	Solder Assembly Kit Part Numbers	Instruction Sheet	M/A-COM Model Numbers	Part Numbers
402 (3.58 [.141])	Stainless, Gold[1]	No	Solder	1055420-1	408-4764	2001-5003-02	1050525-1
405 (2.16 [.085])	Stainless, Gold[1]	No	Solder	1055420-1	408-4765	2001-7985-02	1050770-1
405 (2.16 [.085])	Brass, Gold	No	Solder	1055420-1	408-4765	2201-7985-09	1091921-1
402 (3.58 [.141])	Stainless, Gold[1]	No Center Contact	No Center Contact	N/A	—	2001-5031-02	1050542-1
405 (2.16 [.085])	Stainless, Gold[1]	No	Solder	1055420-1	—	2001-5032-02	1050548-1

[1] Coupling nut is passivated stainless steel.

Straight Cable Jack



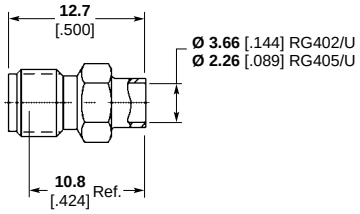

Cable Type RG/U	Body Material & Finish	Contact Captivation	Contact Attachment	Solder Assembly Kit Part Numbers	Instruction Sheet	M/A-COM Model Numbers	Part Numbers
402 (3.58 [.141])	Stainless, Gold	No	Solder	1055420-1	408-4767	2002-5015-00	1050854-1
405 (2.16 [.085])	Stainless, Gold	No	Solder	1055420-1	408-4833	2002-5016-00	1050859-1

For complete product information, order Catalog 1307191

Products for Industrial & Commercial Applications

Dimensions are shown for reference purposes only.

Dimensions are in inches and millimeters unless otherwise specified. Values in brackets are metric equivalents.

Specifications subject to change.

Technical Support Center
1-800-522-6752
www.tycoelectronics.com

Direct Solder Attachment, Semi-Rigid Cable Connectors

Bulkhead Cable Jack



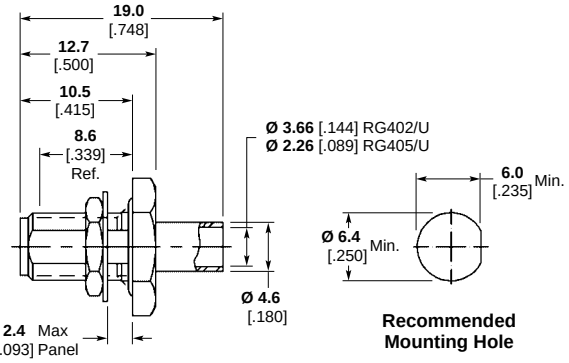

Cable Type RG/U	Body Material & Finish	Contact Captivation	Contact Attachment	Solder Assembly Kit Part Numbers	Instruction Sheet	M/A-COM Model Numbers	Part Number
402 (3.58 [.141])	Brass, Gold	No	Solder	1055420-1	408-4768	2204-7941-09	1082029-1

2 Hole Flange Mount Cable Jack



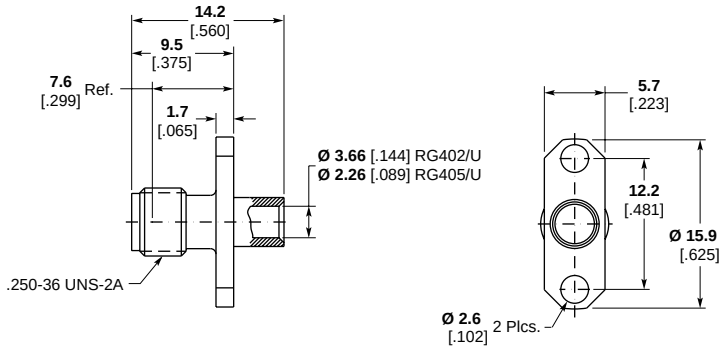

Cable Type RG/U	Body Material & Finish	Contact Captivation	Contact Attachment	Solder Assembly Kit Part Numbers	Instruction Sheet	M/A-COM Model Numbers	Part Numbers
402 (3.58 [.141])	Stainless, Gold	No	Solder	1055420-1	408-4767	2006-5013-00	1051052-1
405 (2.16 [.085])	Stainless, Gold	No	Solder	1055420-1	408-4883	2006-5010-00	1051046-1

4 Hole Flange Mount Cable Jack



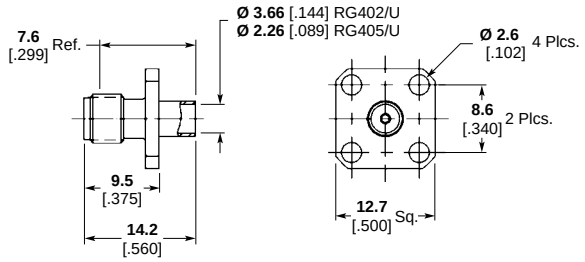

Cable Type RG/U	Body Material & Finish	Contact Captivation	Contact Attachment	Solder Assembly Kit Part Numbers	Instruction Sheet	M/A-COM Model Numbers	Part Numbers
402 (3.58 [.141])	Stainless, Gold	No	Solder	1055420-1	408-4767	2006-7941-00	1051081-1
405 (2.16 [.085])	Stainless, Gold	No	Solder	1055420-1	408-4883	2006-7985-00	1051085-1

For complete product information, order Catalog 1307191

Products for Industrial & Commercial Applications

Dimensions are shown for reference purposes only.

Dimensions are in inches and millimeters unless otherwise specified. Values in brackets are metric equivalents.

Specifications subject to change.

Technical Support Center
1-800-522-6752
www.tycoelectronics.com

Semi-Rigid Cable Connectors

Right Angle Cable Plug, Direct Solder Attachment



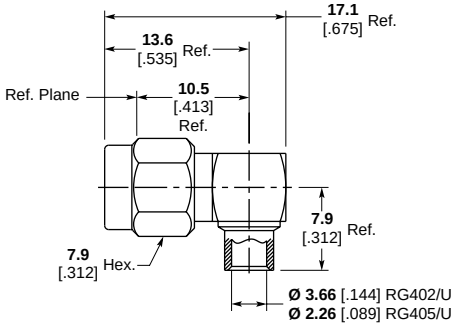

Cable Type RG/U	Body Material & Finish	Contact Captivation	Contact Attachment	Solder Assembly Kit Part Numbers	Instruction Sheet	M/A-COM Model Numbers	Part Numbers
402 (3.58 [.141])	Stainless, Gold[1]	Epoxy	Solder	1055420-1	408-4831	2007-7941-02	1051151-1
405 (2.16 [.085])	Stainless, Gold[1]	Epoxy	Solder	1055420-1	408-4831	2007-7985-02	1051157-1
402 (3.58 [.141])	Brass, Gold	Mechanical	Solder	1055420-1	408-4831	2207-7941-09	1082030-1
405 (2.16 [.085])	Brass, Gold	Mechanical	Solder	1055420-1	408-4831	2207-7985-09	1088312-1

[1]Coupling nut is passivated stainless steel.

Straight Cable Plug, Crimp



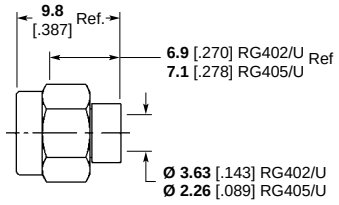

Part Number 1050598-1 and 1050740-1

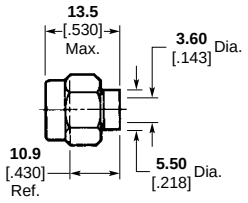

Part Number 1050742-1

Cable Type RG/U	Body Material & Finish	Contact Captivation	Contact Attachment	Crimp Tooling Part Numbers	Instruction Sheet	M/A-COM Model Numbers	Part Numbers
405 (2.16 [.085])	Stainless, Pass.	Mechanical	Solderless	1055835-1	408-4695	2001-5385-02	1050598-1
402 (3.58 [.141])	Stainless, Pass.	No Center Contact	Solderless	1055835-1	408-4690	2001-7641-02	1050740-1
405 (2.16 [.085])	Stainless, Pass.	Mechanical	Solderless	1055835-1	408-4690	2001-7642-02	1050742-1

Straight Cable Plug — Low Profile, Crimp



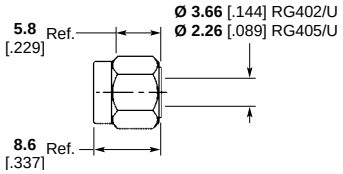

Cable Type RG/U	Body Material & Finish	Contact Captivation	Contact Attachment	Crimp Tooling Part Numbers	Instruction Sheet	M/A-COM Model Numbers	Part Numbers
402 (3.58 [.141])	Stainless, Pass.	No Center Contact	No Center Contact	1055835-1	408-4693	2001-5363-02	1050591-1
402 (3.58 [.141])	Stainless, Pass.	Mechanical	Solderless	1055835-1	408-4696	2001-5395-02	1050602-1
405 (2.16 [.085])	Stainless, Pass.	Mechanical	Solderless	1055835-1	408-4697	2001-5443-02	1050611-1

For complete product information, order Catalog 1307191

Products for Industrial & Commercial Applications

Dimensions are shown for reference purposes only.

Dimensions are in inches and millimeters unless otherwise specified. Values in brackets are metric equivalents.

Specifications subject to change.

Technical Support Center
1-800-522-6752
www.tycoelectronics.com

Semi-Rigid Cable Connectors

Straight Cable Jack, Crimp



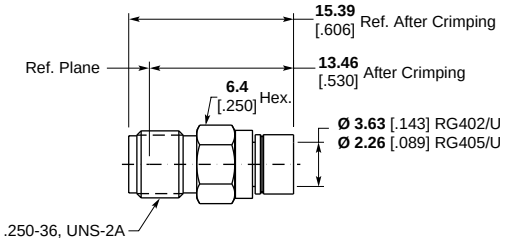

Cable Type RG/U	Body Material & Finish	Contact Captivation	Contact Attachment	Crimp Tooling Part Numbers	Instruction Sheet	M/A-COM Model Numbers	Part Numbers
402 (3.58 [.141])	Stainless, Pass.	Mechanical	Solderless	1055835-1	408-4687	2002-7641-02	1050909-1
405 (2.16 [.085])	Stainless, Pass.	Mechanical	Solderless	1055835-1	408-4688	2002-7685-02	1050911-1

Bulkhead Cable Jack, Crimp



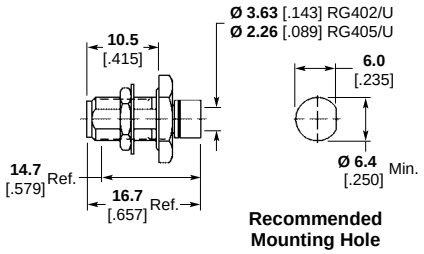

Cable Type RG/U	Body Material & Finish	Contact Captivation	Contact Attachment	Crimp Tooling Part Numbers	Instruction Sheet	M/A-COM Model Numbers	Part Numbers
402 (3.58 [.141])	Stainless, Pass.	Mechanical	Solderless	1055835-1	408-4954	2004-7641-02	1051005-1
405 (2.16 [.085])	Stainless, Pass.	Mechanical	Solderless	1055835-1	408-4689	2004-7685-02	1051007-1

Right Angle Cable Plug, Crimp



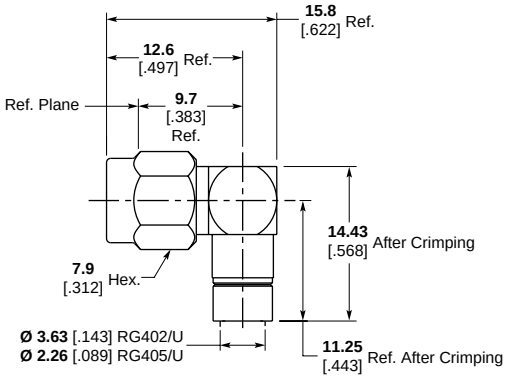

Cable Type RG/U	Body Material & Finish	Contact Captivation	Contact Attachment	Crimp Tooling Part Numbers	Instruction Sheet	M/A-COM Model Numbers	Part Numbers
402 (3.58 [.141])	Stainless, Pass.	Mechanical	Solderless	1055835-1	408-4691	2007-7641-02	1051145-1
405 (2.16 [.085])	Stainless, Pass.	Mechanical	Solderless	1055835-1	408-4692	2007-7685-02	1051147-1

For complete product information, order Catalog 1307191

Products for Industrial & Commercial Applications

Dimensions are shown for reference purposes only.

Dimensions are in inches and millimeters unless otherwise specified. Values in brackets are metric equivalents.

Specifications subject to change.

Technical Support Center
1-800-522-6752
www.tycoelectronics.com

Flexible Cable Connectors

Straight Cable Plug, Solder



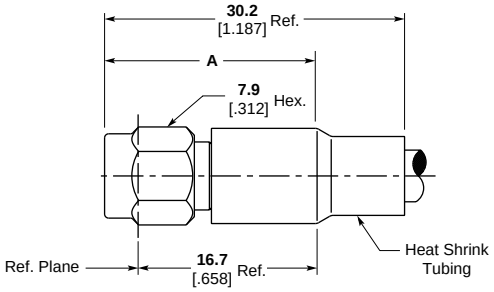

Cable Type RG/U	Body Material & Finish	Contact Captivation	Contact Attachment	A Dim.	Instruction Sheet	M/A-COM Model Numbers	Part Numbers
55, 58, 141, 142, 223, 303, 400	Stainless, Gold[1]	No	Solder	**19.7** .775	408-4821	2031-5002-02	1051638-1
174, 188, 316	Stainless, Gold[1]	No	Solder	**17.5** .690	408-4756	2031-5003-02	1051644-1

[1] Coupling nut is passivated stainless steel.

Straight Cable Jack, Solder



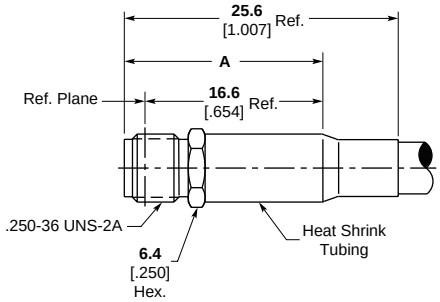

Cable Type RG/U	Body Material & Finish	Contact Captivation	Contact Attachment	A Dim.	Instruction Sheet	M/A-COM Model Numbers	Part Number
55, 58, 141, 142, 223, 303, 400	Stainless, Gold	No	Solder	**18.5** .730	408-4820	2032-5002-00	1051852-1

Bulkhead Cable Jack, Solder



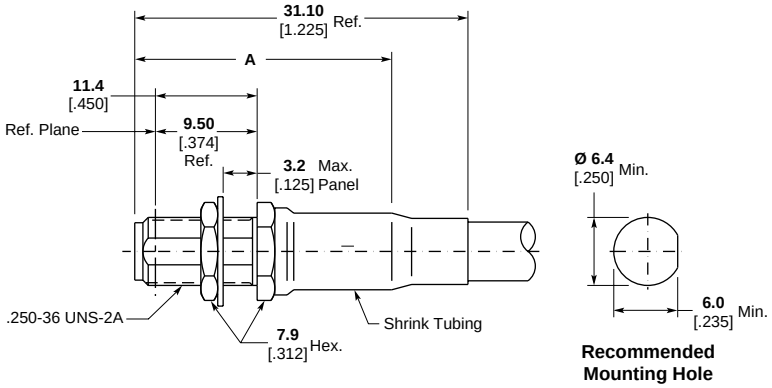

Cable Type RG/U	Body Material & Finish	Contact Captivation	Contact Attachment	A Dim.	Instruction Sheet	M/A-COM Model Numbers	Part Numbers
RG 55, 58, 141, 142, 300	Stainless, Gold	No	Solder	**24.0** .945	408-4817	2034-5007-00	1051861-1
174, 188, 316	Stainless, Gold	No	Solder	**21.0** .825	408-4817	2034-5008-00	1051942-1

For complete product information, order Catalog 1307191

Products for Industrial & Commercial Applications

Dimensions are shown for reference purposes only.

Dimensions are in inches and millimeters unless otherwise specified. Values in brackets are metric equivalents.

Specifications subject to change.

Technical Support Center
1-800-522-6752
www.tycoelectronics.com

Flexible Cable Connectors

Right Angle Cable Plug, Solder



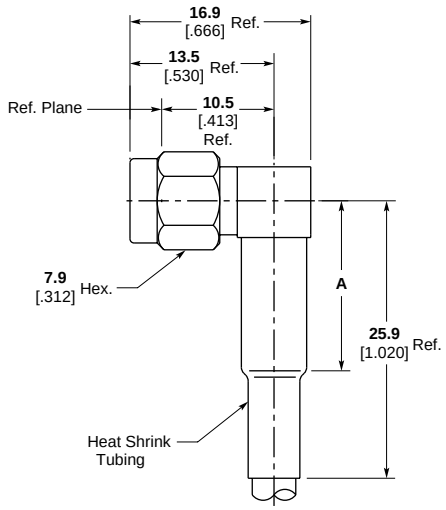

Cable Type RG/U	Body Material & Finish	Contact Captivation	Contact Attachment	A Dim.	Instruction Sheet	M/A-COM Model Numbers	Part Numbers
55, 58, 141, 142, 223, 303, 400	Stainless, Gold[1]	Yes	Solder	**16.0** .630	408-4816	2037-5005-02	1052063-1
174, 188, 316	Stainless, Gold[1]	Yes	Solder	**11.2** .440	408-4815	2037-5006-02	1052067-1

[1]Coupling nut is passivated stainless steel.

Straight Cable Plug, Clamp



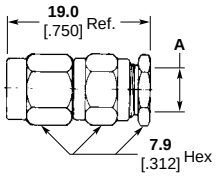

Cable Type RG/U	Body Material & Finish	Contact Captivation	Contact Attachment	A Dim.	Instruction Sheet	M/A-COM Model Numbers	Part Numbers
55, 58, 141, 142, 223, 303, 400	Stainless, Pass.	Yes	Solder	**5.6** .220	408-4906	2001-7141-02	1050718-1
174, 188, 316	Stainless, Pass.	Yes	Solder	**2.9** .116	408-4906	2001-7188-02	1050721-1

Straight Cable Jack, Clamp



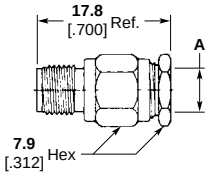

Cable Type RG/U	Body Material & Finish	Contact Captivation	Contact Attachment	Dimension A	Instruction Sheet	M/A-COM Model Numbers	Part Numbers
RG 55, 58, 141, 303	Stainless, Gold	Yes	Solder	**5.6** .220	408-4906	2002-7141-00	1050900-1
174, 188, 316	Stainless, Pass.	Yes	Solder	**2.9** .116	408-4906	2002-7188-02	1050903-1

For complete product information, order Catalog 1307191

Products for Industrial & Commercial Applications

Dimensions are shown for reference purposes only.

Dimensions are in inches and millimeters unless otherwise specified. Values in brackets are metric equivalents.

Specifications subject to change.

Technical Support Center
1-800-522-6752
www.tycoelectronics.com

Flexible Cable Connectors

Bulkhead Feedthrough Cable Jack, Clamp



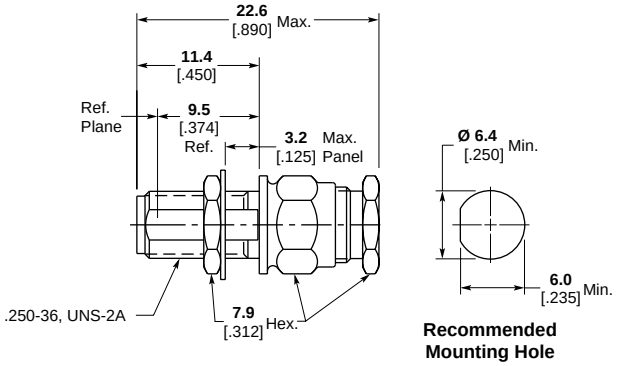

Cable Type RG/U	Body Material & Finish	Contact Captivation	Contact Attachment	Instruction Sheet	M/A-COM Model Numbers	Part Number
174, 188, 316	Stainless, Pass.	Yes	Solder	408-4704	2004-7188-02	1050996-1

Right Angle Cable Plug, Clamp



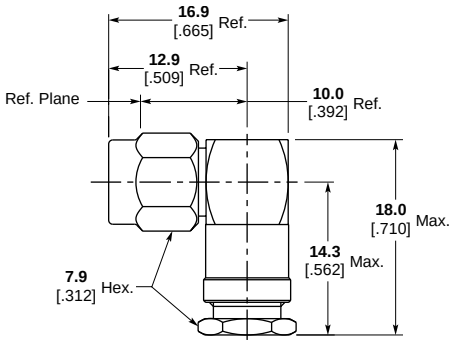

Cable Type RG/U	Body Material & Finish	Contact Captivation	Contact Attachment	Instruction Sheet	M/A-COM Model Numbers	Part Numbers
RG 55, 58, 141, 300	Stainless, Gold	Mechanical	Solder	408-4965	2007-7141-00	1051136-1
174, 188, 316	Stainless, Pass.	Mechanical	Solder	408-4965	2007-7188-02	1051140-1

Straight Cable Plug, Crimp



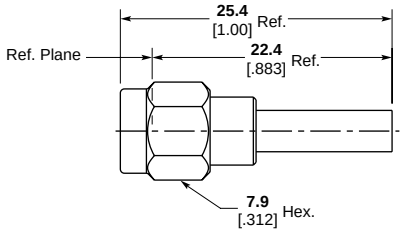

Cable Type RG/U	Body Material & Finish	Contact Captivation	Contact Attachment	Crimp Tooling Part Numbers	Instruction Sheet	M/A-COM Model Numbers	Part Numbers
174, 179, 187, 188, 316	Stainless, Pass.	Mechanical	Solder/Crimp[2]	1055236-1	408-4661	2831-7388-02	1056443-1
RD316	Stainless, Pass.	Mechanical	Solder/Crimp[2]	1055236-1[1]	408-4661	2831-7316-02	1056436-1
58, 141, 303	Stainless, Pass.	Mechanical	Solder/Crimp[2]	1055236-1	408-4661	2831-7358-02	1056441-1
55, 142, 223, 400	Stainless, Pass.	Mechanical	Solder/Crimp[2]	1055236-1	408-4661	2831-7341-02	1056438-1
174, 179, 187, 188, 316	Brass, White Bronze	Mechanical	Solder/Crimp[2]	1055236-1	408-4661	2231-7388-36	1082034-1

[1] Use die 1055270-1 to crimp RD316 ferrule.
[2] Use die 1055880-1 to crimp center contact.

For complete product information, order Catalog 1307191

Products for Industrial & Commercial Applications

Dimensions are shown for reference purposes only.

Dimensions are in inches and millimeters unless otherwise specified. Values in brackets are metric equivalents.

Specifications subject to change.

Technical Support Center
1-800-522-6752
www.tycoelectronics.com

Flexible Cable Connectors

Straight Cable Jack, Crimp



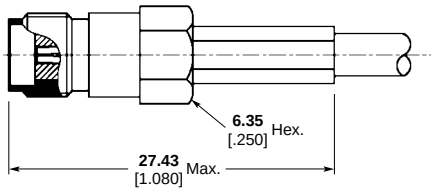

Style A

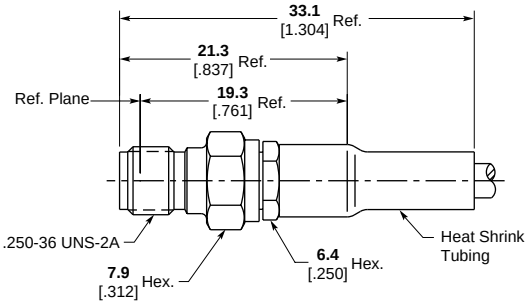

Style B

Cable Type RG/U	Body Material & Finish	Contact Captivation	Contact Attachment	Crimp Tooling Part Numbers	Instruction Sheet	Style	M/A-COM Model Numbers	Part Numbers
58	Brass, Nickel	Mechanical	Solder	[1]	408-4032	A	—	447648-1
142	Brass, Nickel	Mechanical	Solder	[1]	408-4032	A	—	447648-2
174, 316	Brass, Nickel	Mechanical	Solder	[1]	408-4032	A	—	447648-3
55, 142, 223, 400	Stainless, Pass.	Mechanical	Solder	1055236-1	408-4703	B	2032-5007-02	1051862-1
58, 141, 303	Stainless, Pass.	Mechanical	Solder	1055236-1	408-4704	B	2032-5021-02	1051867-1
174, 188, 316	Stainless, Pass.	Mechanical	Solder	1055236-1	408-4708	B	2032-5003-02	1051855-1
178, 196	Stainless, Pass.	Mechanical	Solder	1055236-1	408-4806	B	2032-5026-02	1051869-1

[1] Refer to Tyco Customer Print for tooling requirement. Daniels/Mil Tooling used for contact and ferrule crimp.

Bulkhead Feedthrough Cable Jack, Crimp



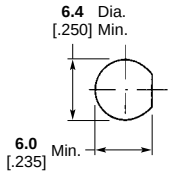

Recommended Mounting Hole

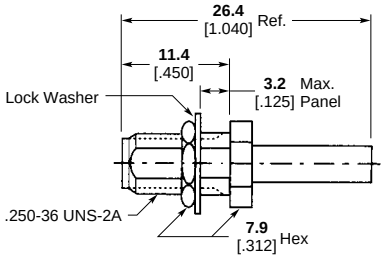

Cable Type RG/U	Body Material & Finish	Contact Captivation	Contact Attachment	Crimp Tooling Part Numbers	Instruction Sheet	M/A-COM Model Numbers	Part Numbers
174, 179, 187, 188, 316	Stainless, Pass.	Mechanical	Solder/Crimp[2]	1055236-1	408-4661	2834-7388-02	1056452-1
RD316	Stainless, Pass.	Mechanical	Solder/Crimp[2]	1055236-1[3]	408-4661	2834-7316-02	1056445-1
58, 141, 303	Stainless, Pass.	Mechanical	Solder/Crimp[2]	1055236-1	408-4661	2834-7358-02	1056450-1
55, 142, 223, 400	Stainless, Pass.	Mechanical	Solder/Crimp[2]	1055236-1	408-4661	2834-7341-02	1056447-1
142	Brass, Nickel	Mechanical	Crimp	[1]	408-4032	—	448103-1
174, 188, 316	Brass, Nickel	Mechanical	Crimp	[1]	408-4032	—	448103-2

[1] Refer to Tyco Customer Print for tooling requirement. Daniels/Mil Tooling used for contact and ferrule crimp.
[2] Use die 1055880-1 to crimp center contact.
[3] Use die 1055270-1 to crimp RD316 ferrule.

For complete product information, order Catalog 1307191

Products for Industrial & Commercial Applications

Dimensions are shown for reference purposes only.

Dimensions are in inches and millimeters unless otherwise specified. Values in brackets are metric equivalents.

Specifications subject to change.

Technical Support Center
1-800-522-6752
www.tycoelectronics.com

Flexible Cable Connectors

Right Angle Cable Plug, Crimp



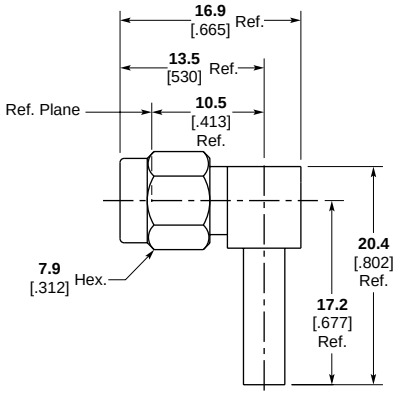

Cable Type RG/U	Body Material & Finish	Contact Captivation	Contact Attachment	Crimp Tooling Part Numbers	Instruction Sheet	M/A-COM Model Numbers	Part Numbers
174, 179, 187, 188, 316	Stainless, Pass.	Mechanical	Solder	1055236-1	408-4659	2837-7388-02	1056462-1
58, 141, 303	Stainless, Pass.	Mechanical	Solder	1055236-1	408-4659	2837-7316-02	1056456-1
174, 188, 316	Stainless, Pass.	Mechanical	Solder	1055236-1	408-4659	2837-7358-02	1056460-1
178, 196	Stainless, Pass.	Mechanical	Solder	1055236-1	408-4659	2837-7341-02	1056458-1

Right Angle Cable Plug, Crimp



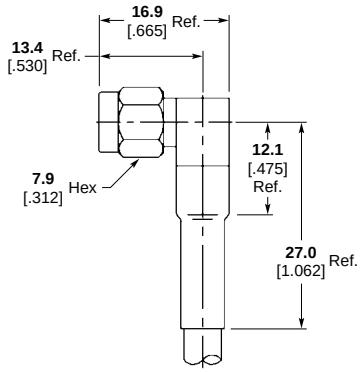

Cable Type RG/U	Body Material & Finish	Contact Captivation	Contact Attachment	Crimp Tooling Part Numbers	Instruction Sheet	M/A-COM Model Numbers	Part Numbers
55, 142, 223, 400	Stainless, Pass.	Epoxy	Solder	1055236-1	408-4681	2037-5007-02	1052072-1
58, 141, 303	Stainless, Pass.	Epoxy	Solder	1055236-1	408-4682	2037-5056-02	1052093-1
174, 188, 316	Stainless, Pass.	Epoxy	Solder	1055236-1	408-4683	2037-5008-02	1052076-1
178, 196	Stainless, Pass.	Epoxy	Solder	1055236-1	408-4801	2037-5100-02	1052098-1

For complete product information, order Catalog 1307191

Products for Industrial & Commercial Applications

Dimensions are shown for reference purposes only.

Dimensions are in inches and millimeters unless otherwise specified. Values in brackets are metric equivalents.

Specifications subject to change.

Technical Support Center
1-800-522-6752
www.tycoelectronics.com

Panel Mount, Solder Pot Terminal

4 Hole Flange Mount Plug Receptacle



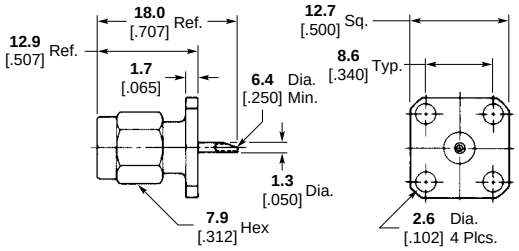

Body Material & Finish	Contact Captivation	RF Leakage db min.	Temperature Range	M/A-COM Model Number	Part Number
Stainless, Passivated	Epoxy	N/A	-65 to 125° C	2051-0000-02	1052324-1

4 Hole Flange Mount Jack Receptacle



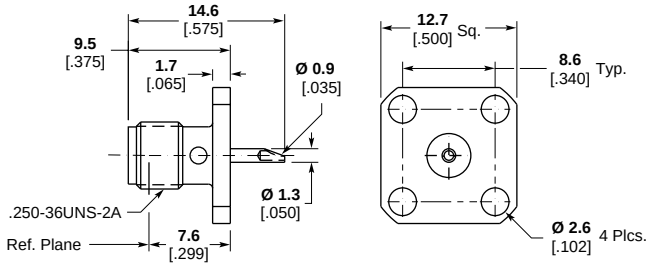

Body Material & Finish	Contact Captivation	RF Leakage db min.	Temperature Range	M/A-COM Model Number	Part Number
Stainless, Passivated	Epoxy	-(60-fGHz)	-65 to 125° C	2052-0000-02	1052422-1

2 Hole Flange Mount Plug Receptacle



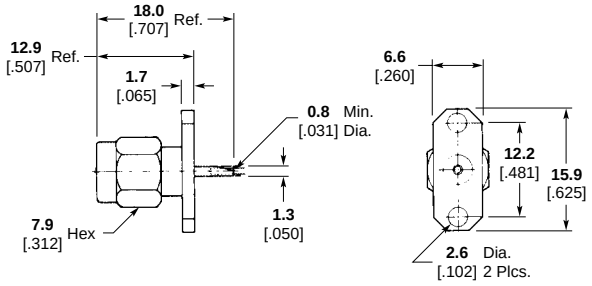

Body Material & Finish	Contact Captivation	RF Leakage db min.	Temperature Range	M/A-COM Model Number	Part Number
Stainless, Passivated	Epoxy	-(60-fGHz)	-65 to 125° C	2051-1350-02	1052343-1

Products for Industrial & Commercial Applications

Dimensions are shown for reference purposes only.

Dimensions are in inches and millimeters unless otherwise specified. Values in brackets are metric equivalents.

Specifications subject to change.

Technical Support Center
1-800-522-6752
www.tycoelectronics.com

Jacks

2 Hole Flange Mount Jack Receptacle without EMI/RFI Gasket, Field Replaceable Hermetic Launchers



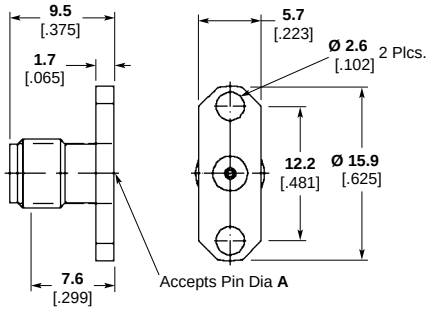

Material & Finish	Captivation	Pin Diameter A	M/A-COM Model Numbers	Part Numbers
Stainless, Passivated	Mechanical	.51 [.020]	2052-3363-02	1052652-1
Stainless, Passivated	Mechanical	.91 [.036]	2052-3359-02	1052646-1

PC Board Mount Vertical Jack



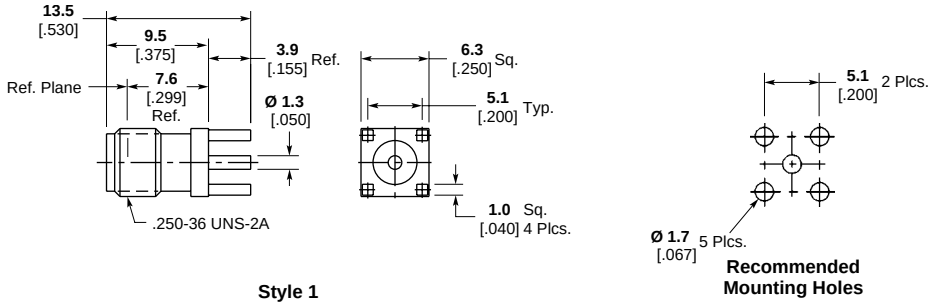

Style 1

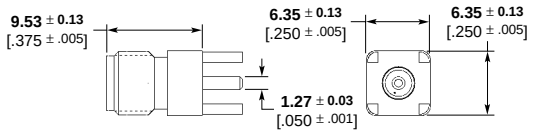

Style 2

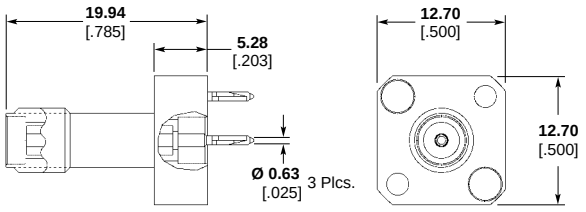

Style 3

Material & Finish	Style Numbers	M/A-COM Model Numbers	Part Numbers
Stainless, Gold	1	2062-0000-00	1053354-1
Brass, Gold	1	2262-0000-09	1223104-1
Brass, Gold	2	—	221789-1
Brass, Gold	2	—	221789-3
Brass, Nickel Plate	3	—	1274096-1

For complete product information, order Catalog 1307191

Products for Industrial & Commercial Applications

Dimensions are shown for reference purposes only.

Dimensions are in inches and millimeters unless otherwise specified. Values in brackets are metric equivalents.

Specifications subject to change.

Technical Support Center
1-800-522-6752
www.tycoelectronics.com

Tooling

Solder Assembly Kit Brass SMA Connectors

Kit Part Number 1055420-1

(M/A-COM Model Number 2098-5066-54)





Inserts



Locator Tools



Dielectric Insert Tool



Solder Gage



Fixture Sub-Assembly



Retainer Ring Pliers



Dielectric Recess Tool

Center Contact Holder

Item Description	M/A-COM Model Numbers	Part Numbers
Center Contact Holder	2098-5221-10	1055454-1
Dielectric Insert Tool	2098-5215-02	1055448-1
	2098-5214-02	1055447-1
Dielectric Recess Tool	2098-5217-54	1055450-1
Fixture Sub-Assembly	2098-5206-54	1055439-1
Inserts — 2.16 [.085] (2)	2098-5208-54	1055441-1
Inserts — 3.58 [.141] (2)	2098-5207-54	1055440-1
Locator Tool	2098-5209-02	1055442-1
	2098-5210-02	1055443-1
	2098-5213-02	1055446-1
	2098-5218-02	1055451-1
Retainer Ring Pliers	2098-5216-54	1055449-1
Solder Gauge 0.25 [.010]	2098-5516-02	1055500-1
Solder Gauge 0.38 [.015]	2098-5212-02	1055445-1
Solder Gauge 0.46 [.018]	2098-5211-02	1055444-1

Universal Compression Crimp Tool

Kit Part Number 1055835-1

(Kit M/A-COM Model Number 2598-5200-54)

AMP Universal Compression Crimp Tool offers the ability to rapidly produce cable assemblies using solderless compression crimp connectors with semi-rigid cables. This universal assembly tool kit will attach SMA, OSP, N and TNC series connectors to 3.58 [.141], 2.16 [.085] and 6.35 [.250] cable quickly and consistently with excellent mechanical and electrical results.

The tool kit permits single hand assembly. Anvils and cable supports can be quickly changed. Crimp lengths can be adjusted from .025 [.001] to 25.4 [1.000] in increments of .025 [.001]. Sharp radius bends in cables are easily accommodated. The kit contains:





Crimp Frame



Anvil



Cable Supports



Gauge

Description	M/A-COM Model Numbers	Part Numbers
Crimp Frame	2598-5196-54	1055831-1
Calibration Gauge	2598-5197-54	1055832-1
3.58 [.141] Cable Support	2598-5198-54	1055833-1
2.16 [.085] Cable Support	2598-5199-54	1055834-1
SMA Plug Anvil	2598-5201-54	1055836-1
SMA Jack Anvil	2598-5202-54	1055837-1
Type N Plug Anvil	2598-5203-54	1055838-1
Type N Jack Anvil	2598-5204-54	1055839-1
TNC Plug Anvil	2598-5205-54	1055840-1
TNC Jack Anvil	2598-5206-54	1055841-1
OSP Plug Anvil	2598-5207-54	1055842-1
OSP Jack Anvil	2598-5208-54	1055843-1

All tools may be purchased separately.

For complete product information, order Catalog 1307191

Products for Industrial & Commercial Applications
Dimensions are shown for reference purposes only.
Dimensions are in inches and millimeters unless otherwise specified. Values in brackets are metric equivalents.
Specifications subject to change.
Technical Support Center 1-800-522-6752 www.tycoelectronics.com

Product Facts

- **SMB offers snap-fit coupling for quick connect/disconnect**
- **Choice of Commercial or High Rel Connectors**
- **50 and 75 Ω MIL-Type connectors available**
- **Straight plugs and jacks are completely crimp terminated**
- **Fast easy cable assembly**
- **Low VSWR**
- **Standard military, commercial or AMP tooling**
- **Listed under the Component Program of Underwriters Laboratories Inc., File No. E81956**
- **PC Board soldered connectors are recognized under the Component Program of Underwriters Laboratories Inc., File No. E81956**
- **Certified by Canadian Standards Association File No. LR 7189**

SMB Connectors are available in commercial and high rel versions. They are ideally suited for circuit miniaturization and are offered in a wide range of configurations including plugs, right angle plugs, jacks, bulkhead jacks and adapters, as well as printed circuit board and solder jacks.

Termination costs are kept to a minimum using plugs and jacks with a crimp center contact and hex crimp outer braid. Both hand held tooling and pneumatic bench-mounted tooling is available. Easily assembled right-angle plugs have a hex crimp on the outer braid ferrule and bifurcated solder center contacts.

AMP 75 Ohm BT 43 SMB Connectors feature unique spring mating with snap-fit couplings for quick connect/disconnect. These connectors are designed to be intermateable with 75 Ohm SMB MIL-C-39012 connectors. They also feature reliable dual crimp cable terminations.

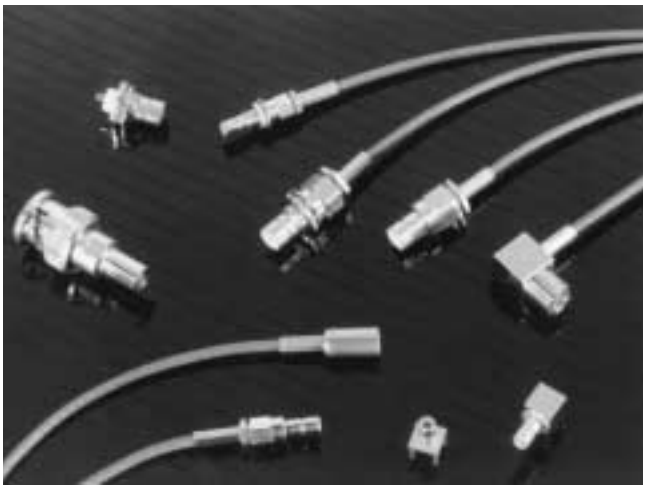

Packaging—All connectors are packaged individually unless otherwise noted under the "Military No. and/or Comments" column in the connector specifications chart.

SMB Connector Specifications

Electrical Characteristics:

Impedance — 50 ohms and 75 ohms, nominal

Frequency Range — 0 to 4.0 GHz

Voltage Rating (VRMS) —

	Sea Level	70,000 Feet
50 ohm connectors for RG-178/U series cable	300	75
50 ohm connectors for RG-316/U series cable	400	100
75 ohm connectors for RG-179/U series cable	300	75
75 ohm connectors for RG-195/U series cable	500	125

Insulations Resistance — 1000 megohms min.

Contact Resistance — (milliohms max.)

	Initial	After Environment
Center contact	6.0	8.0
Outer contact	1.0	1.5
Braid to body	1.0	N/A

Contact Current Rating — 1.5 amps DC max.

Voltage Standing Wave Ratio (VSWR) —
to 4.0 GHz or 80% of upper cutoff frequency of the cable, whichever is lower.

Cable	Mating Engagement	
	Straight	Rt. Angle
RG-178/U Series	1.30 + .04F	1.45 + .06F
RG-316/U Series	1.25 + .04F	1.35 + .04F

F=GHz, does not apply to 75 ohm connectors.

RF High Potential Withstanding Voltage

Frequency-5 MHZ

Leakage Current-N/A

50 ohm connectors for RG-178/U series cable	675 VRMS
50 ohm connectors for RG-316/U series cable	950 VRMS
75 ohm connectors for RG-179/U series cable	950 VRMS
75 ohm connectors for RG-195/U series cable	1225 VRMS

RF Leakage —
-55 dB min. at 2-3 GHz

Insertion Loss —
.30dB max. at 3 GHz

Mechanical Characteristics

Engagement Forces —

14 lbs. [62.3 N] maximum engagement initially. After 500 matings, 14 lbs. [62.3 N] maximum engagement and 2 lbs. [8.8 N] minimum disengagement for all of SMBs.

Cable Attachment —

Straight Connectors–Crimp, both center contact and braid

Right-Angle Connectors–Crimp on braid and bifurcated solder center contact.

Durability — 500 cycles per MIL-C-39012

Contact Captivation — When captivated, the contacts will withstand 4.0 lbs. minimum axial force.

Cable Retention — When properly assembled to the compatible braided coaxial cable, the retention is equal to the breaking strength of the cable.

Marking — Per MIL-STD-130

Environmental Characteristics

Temperature Rating — -65°C to +165°C

Corrosion (salt spray) — MIL-STD-202, Method 101, test condition B, 5% salt solution

Vibration High Frequency — MIL-STD-202, Method 204, test condition B (15 G's)

Shock — MIL-STD-202, Method 213, test condition B, 75 G's at 6 milliseconds, 1/2 sine

Thermal Shock — MIL-STD-202, Method 107, test condition B, except high temperature shall be +85°C. High temperature shall be +200°C for connectors using 200°C cables.

Moisture Resistance — MIL-STD-202, Method 106, when interface gasket is used. No measurements of high humidity. Insulation resistance shall be 200 megohms minimum within five minutes after removal from humidity.

Durability Test — Conducted per MIL-C-39012 Reg. Para. 3.15, Method Para. 4.6.12

Materials

Body, Body Components and Male Contacts — Brass, half hard, per QQ-B-626, Alloy 360, Zinc per QQ-Z-363

Female Contacts — Beryllium copper per QQ-C-530, heat treated per MIL-H-7199.

Insulators — TFE fluorocarbon per ASTM D 1710, Type 1, Grade 1.

Lockwashers — Phosphor bronze per QQ-B-750.

Crimp Ferrule — Annealed copper alloy per WW-T-799.

Gaskets — Silicone rubber per ZZ-R-765, Class 11B, Grade 65-75.

Plating

Center Contacts — 0.00127 [.000050] min. Gold per MIL-G-452048 Type 1, Grade C, Class 1, over 0.00254 [.000100] min. nickel per QQ-N-290

Other Metal Parts — Gold, Nickel or Solder plated to meet the Finish and Corrosion requirements of MIL-C-39012.

Straight Plugs

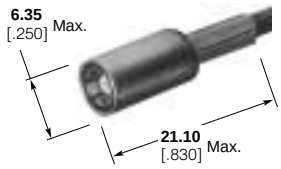

RG/U Cable	Center Contact Plating	Outer Contact Plating	Other Metal Parts Plating	Dielectric	Style	Part Numbers
178, 178A, 178B, 196, 196A	Gold	Gold	Gold	TEFLON	Mil Type	413985-5
	Gold	Gold	Nickel	TEFLON	Mil Type	413985-6
174, 316, 188, 188A	Gold	Gold	Gold	TEFLON	Mil Type	413985-1
	Gold	Gold	Nickel	TEFLON	Mil Type	413985-3
	Gold	Nickel	Nickel	TEFLON	Mil Type	413985-7
	Gold	Gold	Nickel	TEFLON	Die Cast	414946-1
	Gold	Nickel	Nickel	TEFLON	Die Cast	414946-2
	Gold	Nickel	Black Nickel	TEFLON	Die Cast	1-414946-2
179, 179A, 179B, 161, 187, 187A, Belden 9221	Gold	Gold	Gold	TEFLON	Mil Type	1-413985-0
	Gold	Gold	Nickel	TEFLON	Mil Type	1-413985-1
	Gold	Gold	Nickel	TEFLON	Die Cast	414946-5
	Gold	Nickel	Nickel	TEFLON	Die Cast	414946-6
RD 316, 188 Double Braid	Gold	Gold	Gold	TEFLON	Mil Type	413985-2
	Gold	Gold	Nickel	TEFLON	Mil Type	413985-4
	Gold	Gold	Nickel	TEFLON	Die Cast	414946-3
	Gold	Nickel	Nickel	TEFLON	Mil Type	413985-8
	Gold	Nickel	Nickel	TEFLON	Die Cast	414946-4

Right-Angle Plugs

Mil Type

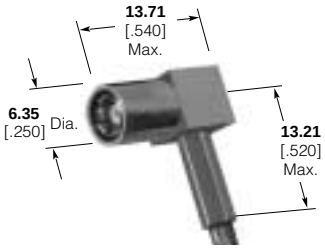

Die Cast

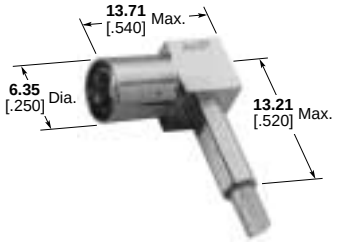

RG/U Cable	Center Contact Plating	Outer Contact Plating	Other Metal Parts Plating	Dielectric	Style	Part Numbers
178, 178A, 178B, 196, 196A	Gold	Gold	Gold	TEFLON	Mil Type	414002-7
	Gold	Gold	Nickel	TEFLON	Mil Type	414002-8
	Gold	Gold	Nickel	TEFLON	Die Cast	414363-8
	Gold	Nickel	Nickel	TEFLON	Die Cast	414363-9
174, 316, 188, 188A 179, 179A, 179B 161, 187, 187A Belden 9221	Gold	Gold	Gold	TEFLON	Mil Type	414002-1
	Gold	Gold	Nickel	TEFLON	Mil Type	414002-3
	Gold	Nickel	Nickel	TEFLON	Mil Type	414002-5
	Gold	Gold	Nickel	TEFLON	Die Cast	414363-3
	Gold	Nickel	Nickel	TEFLON	Die Cast	414363-5
RD 316, 188 Double Braid	Gold	Gold	Gold	TEFLON	Mil Type	414002-2
	Gold	Gold	Nickel	TEFLON	Mil Type	414002-4
	Gold	Gold	Nickel	TEFLON	Die Cast	414363-4
	Gold	Nickel	Nickel	TEFLON	Die Cast	414363-6

For complete product information, order Catalog 1307191

Products for Industrial & Commercial Applications

Dimensions are shown for reference purposes only.

Dimensions are in inches and millimeters unless otherwise specified. Values in brackets are metric equivalents.

Specifications subject to change.

Technical Support Center
1-800-522-6752
www.tycoelectronics.com

Straight Jacks

Commercial Jack

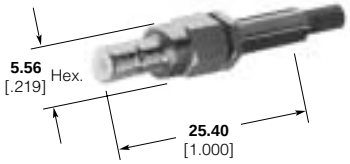

Mil Type Jack



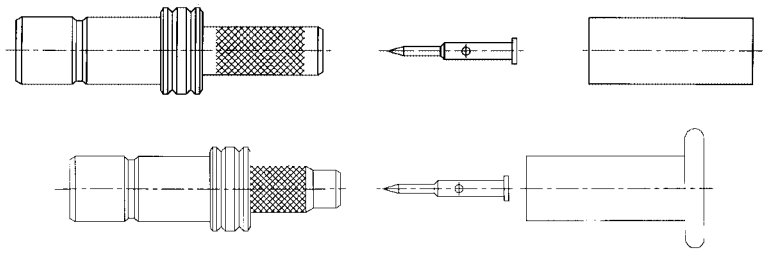

RG/U Cable	Center Contact Plating	Body Plating	Dielectric	Style	Jack Part Numbers
178, 178A, 178B, 196, 196A	Gold	Nickel	TEFLON	Mil Type	414170-2
174, 316, 188, 188A	Gold	Nickel	TEFLON	Mil Type	414170-1
	Gold	Nickel	TEFLON	Commercial	414948-1
	Gold	Nickel	TEFLON	Die Cast	1274035-1
RD 316, 188 Double Braid	Gold	Nickel	TEFLON	Commercial	414948-3
179, 187	Gold	Nickel	TEFLON	Die Cast	414948-2

Bulkhead Jacks

Bulkhead Jack

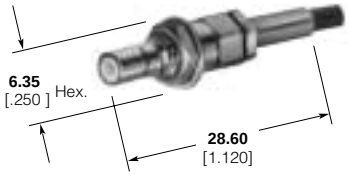

RG/U Cable	Center Contact Plating	Body Plating	Dielectric	Style	Bulkhead Jack. Part Numbers
178, 178A, 178B, 196, 196A	Gold	Nickel	TEFLON	Commercial	415006-3
174, 316, 188,188A	Gold	Nickel	TEFLON	Commercial	415006-1
RD 316, 188 Double Braid	Gold	Nickel	TEFLON	Commercial	415006-2

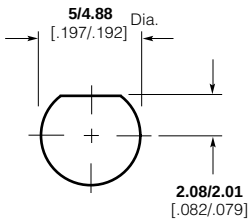

Maximum Panel Thickness **2.36** [.093]
Recommended Panel Cutout for Bulkhead Jack and Adapter

Bulkhead Jack Adapter

(Jack-Jack)

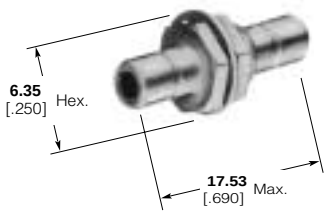

Type	Center Contact Plating	Body Plating	Dielectric	Style	Part Numbers
Jack-To-Jack	Gold	Nickel	TEFLON	Mil Type	228553-1
	Gold	Gold	TEFLON	Mil Type	228553-2

For complete product information, order Catalog 1307191

Products for Industrial & Commercial Applications

Dimensions are shown for reference purposes only.

Dimensions are in inches and millimeters unless otherwise specified. Values in brackets are metric equivalents.

Specifications subject to change.

Technical Support Center
1-800-522-6752
www.tycoelectronics.com

PC Board Jacks and Plugs, Vertical

Commercial

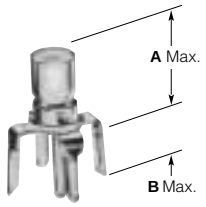

Mil Type

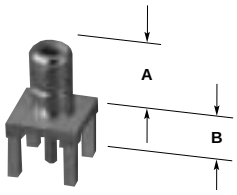

Die Cast

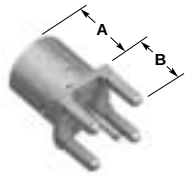

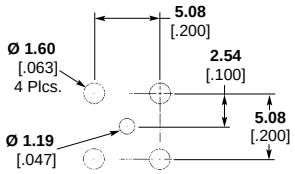

Recommended PC Board Layout

Jacks

Type	Center Contact Plating	Body Plating	Dim. A	Dim. B	Dielectric	Style	Part Numbers
—	Gold	Gold	**7.62** .300	**3.94** .155	TEFLON	Mil Type	413990-1
—	Gold	Nickel	**7.62** .300	**3.94** .155	TEFLON	Mil Type	413990-2
—	Gold	Nickel	**7.62** .300	**3.94** .155	TEFLON	Die Cast	415590-1
—	Gold	Nickel	**10.16** .400	**2.54** .100	TEFLON	Mil Type	414612-2
Low Profile (Jack) Mated Pair	Gold	Gold	**3.94** .155	**5.84** .230	TEFLON	Mil Type	415773-1

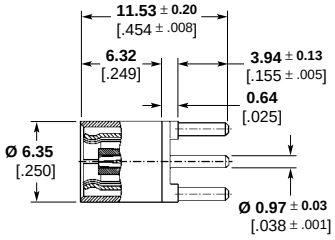

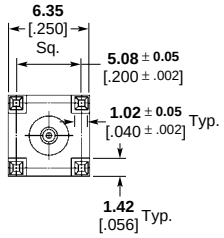

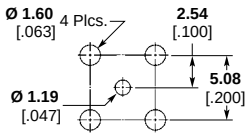

Recommended PC Board Layout

Plugs

Type	Center Contact Plating	Body Plating	Dim. A	Dim. B	Dielectric	Recommended PC Board Layout	Style	Part Number
Low Profile (Plug) Mated Pair	Gold	Nickel	**3.94** .155	**7.62** 300	TEFLON	B	Mil Type	415774-1

For complete product information, order Catalog 1307191

Products for Industrial & Commercial Applications

Dimensions are shown for reference purposes only.

Dimensions are in inches and millimeters unless otherwise specified. Values in brackets are metric equivalents.

Specifications subject to change.

Technical Support Center
1-800-522-6752
www.tycoelectronics.com

PC Board Jacks and Plugs, Right-Angle

Jack Low Profile

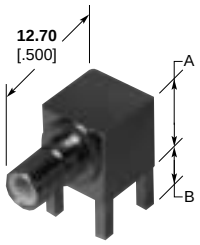

Jack with Standoff Pads

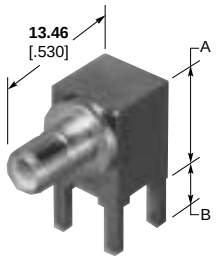

Bulkhead Jack

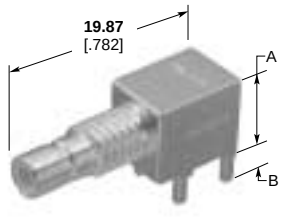

Jacks

Type	Center Contact Plating	Interface Body Plating	PCB Leg Plating	Dielectric	Dim. A	Dim. B	Style	Recommended PC Board Layout	Part Numbers
Low Profile	Gold	Gold	Gold	TEFLON	**7.11** .280	**3.94** .155	Mil Type	B	413996-2
	Gold	Nickel	Nickel	TEFLON	**7.11** .280	**3.94** .155	Mil Type	B	413996-4
	Gold	Gold	Gold	TEFLON	**7.11** .280	**2.79** .110	Die Cast	B	415340-1
	Gold	Gold	Gold	TEFLON	**8.76** .345	**2.79** .110	Die Cast	B	415672-1
With Standoff Pads	Gold	Gold	Gold	TEFLON	**8.51** .335	**3.94** .155	Mil Type	B	414026-2
	Gold	Nickel	Nickel	TEFLON	**8.76** .345	**3.94** .155	Mil Type	B	414026-3
	Gold	Gold	Nickel	TEFLON	**8.51** .335	**3.94** .155	Mil Type	B	414026-4
	Gold	Nickel	Tin-Lead	TEFLON	**8.76** .345	**3.94** .155	Die Cast	B	414337-1
	Gold	Nickel	Nickel	TEFLON	**8.76** .345	**2.79** .110	Die Cast	C	414379-1*
	Gold	Nickel	Nickel	TEFLON	**8.51** .335	**3.94** .155	Die Cast	B	415381-1
Bulkhead	Gold	Gold	Gold	TEFLON	**7.67** .302	**2.79** .110	Die Cast	B	414963-1

* 5 leg design

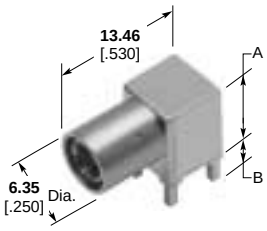

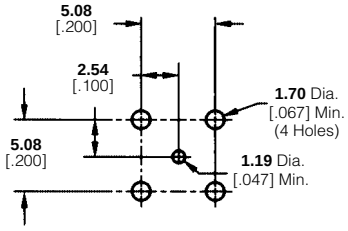

A

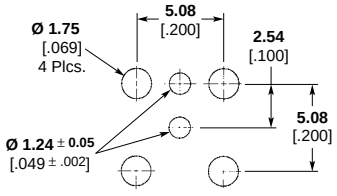

B

Recommended PC Board Layouts

Plugs

Center Contact Plating	Interface Body Plating	PCB Leg Planting	Dielectric	Dim. A	Dim. B	Style	Recommended PC Board Layout	Part Numbers
Gold	Gold	Nickel	TEFLON	**8.76** .345	**3.94** .155	Die Cast	A	415382-1
Gold	Nickel	Nickel	TEFLON	**8.76** .345	**2.79** .110	Die Cast	B	415380-1*

* 5 leg design

For complete product information, order Catalog 1307191

Products for Industrial & Commercial Applications

Dimensions are shown for reference purposes only.

Dimensions are in inches and millimeters unless otherwise specified. Values in brackets are metric equivalents.

Specifications subject to change.

Technical Support Center
1-800-522-6752
www.tycoelectronics.com

Product Facts

- **Industry standard for miniature 75 ohm SMB**
- **SMB offers snap-fit coupling for quick connect/disconnect**
- **Suitable for high density applications**
- **Fast easy cable assembly**
- **Low VSWR**
- **Connectors offer consistent mating and unmating forces**
- **Straight plugs and jacks are completely crimp terminated**
- **Low cost**

Mini 75 ohm SMB connectors are ideally suited for circuit miniaturization in communication, broadband and switching equipment as well as a variety of other applications.

They offer the same low consistent mating/unmating force as AMP standard SMB products and therefore, outer contact resistance values are maintained from connector to connector.

Standard military, commercial or AMP tooling can be used to terminate these products. Cost effective assembly of the straight plugs is completed with a crimp center contact and hex crimp on the outer braid. Right angle plugs have a hex crimp on the outer braid ferrule and bifurcated solder center contacts.



Electrical Characteristics:

Impedance — 75 ohms
Frequency Range — 0 to 4.0 GHz
Insulation Resistance — 1000 megohms
Contact Current Rating — 1.5 amps DC max.

Mechanical Characteristics:

Engagement Forces — Initial — 14.0 lbs. [62.3 N] maximum engagement. After 500 matings, 14.0 lbs. [62.3 N] maximum engagement.
Durability — 500 cycles

Environmental Characteristics:

Temperature Rating — -65°C to +165°C

Straight Plug

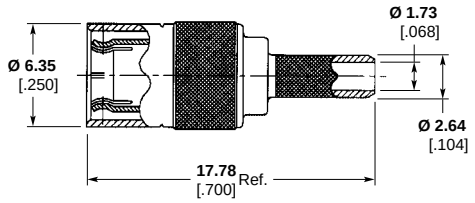

RG Cable	Center Contact Plating	Outer Contact Plating	Body Plating	Part Numbers
179, 187	Gold	Gold	Nickel	415487-1
179, 187	Gold	Nickel	Nickel	415487-2
RD 179	Gold	Nickel	Nickel	415487-3

Right-Angle Plug

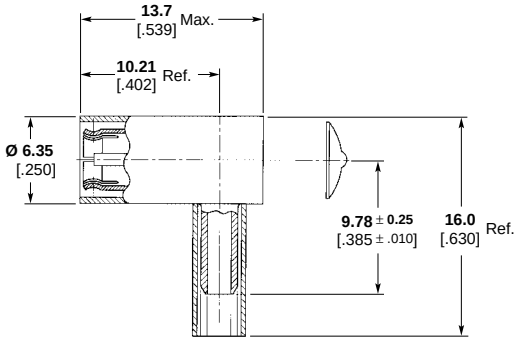

RG Cable	Center Contact Plating	Outer Contact Plating	Body Plating	Part Numbers
179, 187	Gold	Nickel	Nickel	415484-1
179, 187	Gold	Gold	Nickel	415484-2
RD 179	Gold	Gold	Nickel	415484-3

Bulkhead Jack

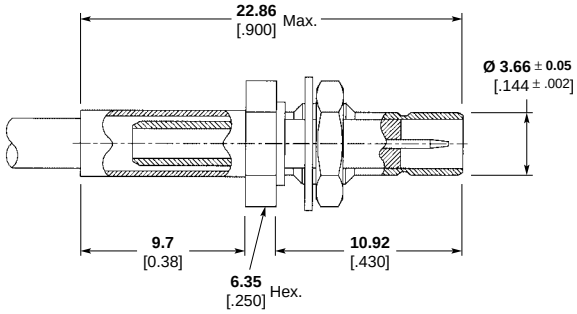

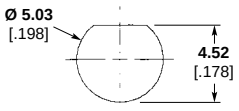

Recommended PC Board Layout

RG Cable	Center Contact Plating	Body Plating	Part Number
179, 187	Gold	Nickel	415500-1

For complete product information, order Catalog 1307191

Products for Industrial & Commercial Applications

Dimensions are shown for reference purposes only.

Dimensions are in inches and millimeters unless otherwise specified. Values in brackets are metric equivalents.

Specifications subject to change.

Technical Support Center
1-800-522-6752
www.tycoelectronics.com

Vertical PC Board Jacks

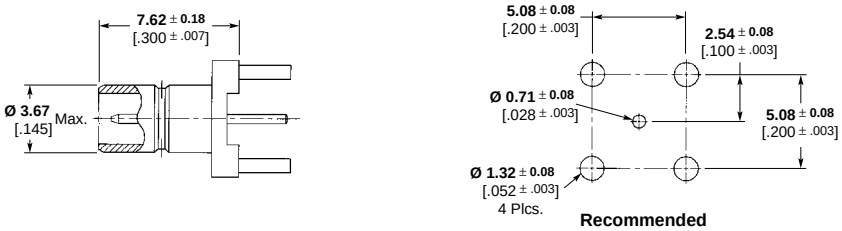

Recommended PC Board Layout

Leg Length	Center Contact Plating	Body Plating	Part Numbers
2.11 .083	Gold	Gold	415504-1
2.11 .083	Gold	Gold Flash	415504-2
3.05 .120	Gold	Gold	415504-3
3.05 .120	Gold	Gold Flash	415504-4

Right-Angle PC Board Jacks

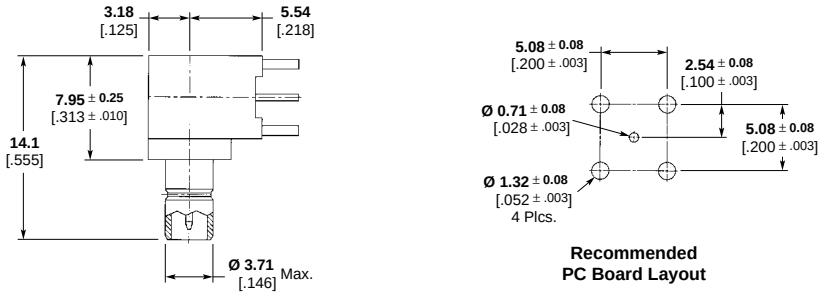

Recommended PC Board Layout

Leg Length	Center Contact Plating	Body Plating	Part Numbers
2.79 .110	Gold	Gold	415490-1
2.79 .110	Gold	Nickel	415490-2
2.11 .083	Gold	Gold	415490-3
2.11 .083	Gold	Nickel	415490-4

Right-Angle PC Board Bulkhead Jacks

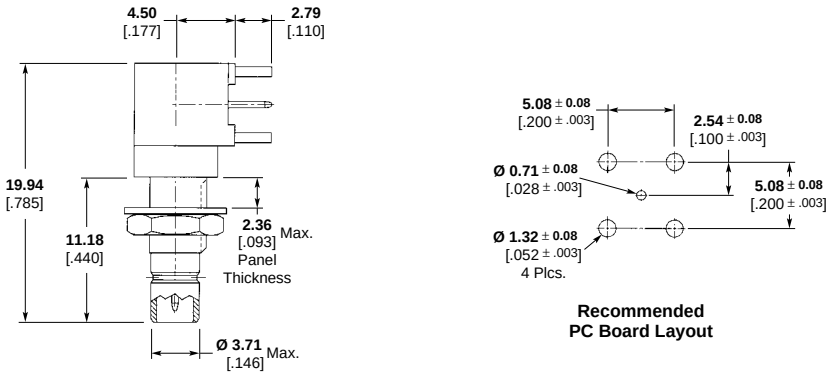

Recommended PC Board Layout

Leg Length	Center Contact Plating	Body Plating	Part Numbers
2.79 .110	Gold	Nickel	415377-1
2.79 .110	Gold	Gold	415377-2

For complete product information, order Catalog 1307191

Products for Industrial & Commercial Applications

Dimensions are shown for reference purposes only.

Dimensions are in inches and millimeters unless otherwise specified. Values in brackets are metric equivalents.

Specifications subject to change.

Technical Support Center
1-800-522-6752
www.tycoelectronics.com

Straight Plugs

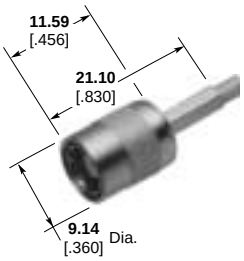

RG/U Cable	Center Contact Plating	Outer Body Plating	Outer Contact Plating	Dielectric	Style	Part Numbers
179, 179A, 179B, 161, 187, 187A, Belden 9221	Gold	Gold	Nickel	TEFLON	Mil Type	414618-1
	Gold	Nickel	Nickel	TEFLON	Mil Type	414618-2

Right-Angle Plugs

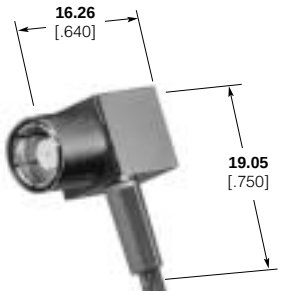

RG/U Cable	Center Contact Plating	Outer Body Plating	Outer Contact Plating	Dielectric	Style	Part Numbers
179, 179A, 179B, 161, 187, 187A, Belden 9221	Gold	Gold	Nickel	TEFLON	Mil Type	414048-6
	Gold	Gold	Nickel	TEFLON	Commercial	415462-1*
	Gold	Nickel	Nickel	TEFLON	Mil Type	1-414048-3
	Gold	Nickel	Nickel	TEFLON	Commercial	415462-2*

Straight Jacks

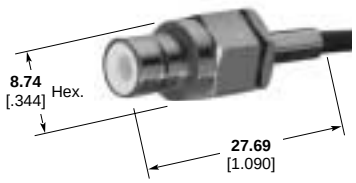

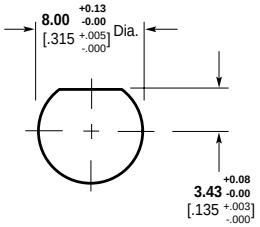

Maximum Panel Thickness **2.36** [.093]

Recommended Panel Cutout

RG/U Cable	Center Contact Plating	Body Plating	Dielectric	Style	Part Number
179, 179A, 179B, 161, 187, 187A, Belden 9221	Gold	Nickel	TEFLON	Mil Type	414767-1

Bulkhead Jacks

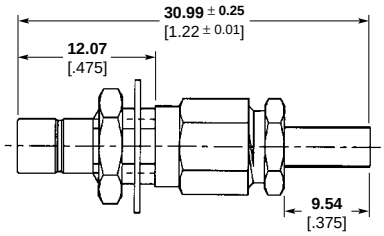

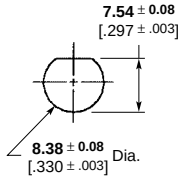

Recommended Panel Cutout

RG/U Cable	Center Contact Plating	Body Plating	Dielectric	Style	Part Numbers
179, 179A, 179B, 161, 187, 187A, Belden 9221	Gold	Front-Gold Rear-Nickel	TEFLON	Mil Type	414075-2
	Gold	Nickel	TEFLON	Mil Type	414075-6

For complete product information, order Catalog 1307191

Products for Industrial & Commercial Applications

Dimensions are shown for reference purposes only.

Dimensions are in inches and millimeters unless otherwise specified. Values in brackets are metric equivalents.

Specifications subject to change.

Technical Support Center
1-800-522-6752
www.tycoelectronics.com

PC Board Jacks

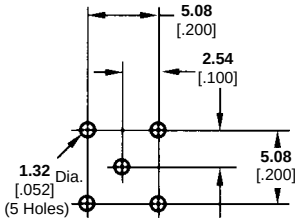

Recommended PC Board Layout

Vertical

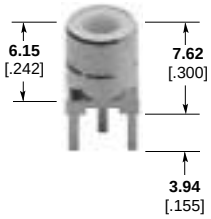

Right-Angle

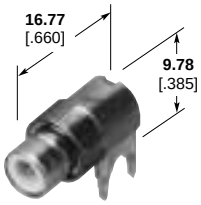

Type	Center Contact Plating	Body Plating	Dielectric	Style	Part Numbers
Vertical	Gold	Gold	TEFLON	Mil Type	414244-1
	Gold	Tin-Lead	TEFLON	Mil Type	414244-4
Right Angle	Gold	Front-Nickel Rear-Tin-Lead	TEFLON	Commercial	221014-1

Plating: 0.00076 [.000030] thick

Bulkhead PCB Jack Kit

Kit includes Lockwasher and Jam Nut

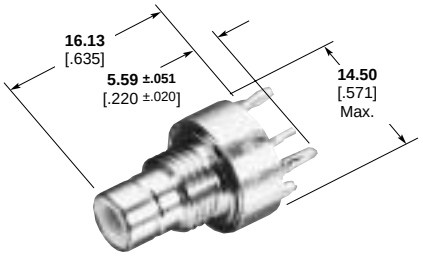

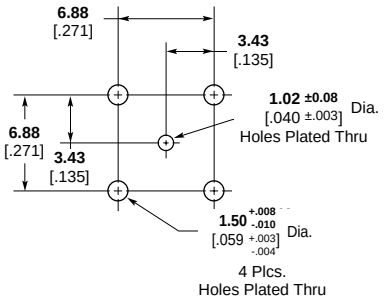

Recommended PC Board Layout

Lockwasher and Jam Nut



Part Number 221486-2

Part Number 221461-2

Type	Center Contact Plating	Body Plating	Dielectric	Kit Part Number
Press Fit	Gold	Nickel	TEFLON	415577-2

For complete product information, order Catalog 1307191

Products for Industrial & Commercial Applications

Dimensions are shown for reference purposes only.

Dimensions are in inches and millimeters unless otherwise specified. Values in brackets are metric equivalents.

Specifications subject to change.

Technical Support Center
1-800-522-6752
www.tycoelectronics.com

Crimp Tooling

50 Ω/75 Ω

RG/U Cable	Commercial Connector Tooling						Mil Type Connector Tooling						
	Center Contact Crimp Tooling			Braid Crimp Tooling			Center Contact Crimp Tooling			Braid Crimp Tooling			
	Dies for AMP PRO-CRIMPER Hand Tool Number	MIL-C-22520/2-01 Tool		Dies for AMP PRO-CRIMPER Hand Tool		MIL-C-22520/5-01 Tool	Daniels* Hand Tool	Daniels* Positioner Number	Selector Position	Dies for AMP PRO-CRIMPER Hand Tool		Daniels Hand Tool	Hex Die Across Flats
		Daniels* Positioner	Position	Number	Position	Daniels* Hex Crimp Die				Number	Position		
178, 178A, 178B, 196, 196A	58489-1	Female-K699 Male-K727	4	58489-1	A&B	Y624	AFM8	Female-K699 Male-K727	4	58483-1	A	HX4-1637	**2.67** .105
Double Braid 178, 196	—	—	—	—	—	—	AFM8	Female-K699 Male-K727	4	58483-1	B	HX4-1637	**3.25** .128
174, 316 188, 188A	58489-1	Female-K699 Male-K727	4	58489-1	A	Y444	AFM8	Female-K699 Male-K727	4	58483-1	B	HX4-1637	**3.25** .128
Double Braid 174, 316, 188	58489-1	Female-K699	4	58489-1	C	Y196 Location A	AFM8	Female-K699	4	58483-1	C	HX4-1637	**3.84** .151
Double Braid 174, 316, 188	58489-1	Male-K727	4	58489-1	C	Y196 Location A	AFM8	Solder	—	58483-1	B	HX4-1637	**3.25** .128
179, 179A 179B, 161, 187, 187A, Belden 9221	58489-1	Female-K699	4	58489-1	A	Y444	AFM8	Female-K699	4	58483-1	B	HX4-1637	**3.25** .128
179, 179A 179B, 161, 187, 187A, Belden 9221	58489-1	Male-K727	4	58489-1	A	Y444	—	Solder	—	58483-1	B	HX4-1637	**3.25** .128
180, 180A 180B	—	—	—	—	—	—	—	Solder	—	58483-1	C	HX4-1637	**3.84** .151
Mini SMB 75 ohm													
179, 187	—	Female-K699	—	58483-1	B	HX4-1637	—	—	—	—	—	—	—
179, 187	—	Solder Center Contact	—	58483-1	B	HX4-1637	—	—	—	—	—	—	—

Note: 1. All 75 ohm SMB connectors have a solder center contact.
2. Equivalent military tool part numbers–M22520/5-01 – Daniels Hand Tool HX4, M22520/5-33 – Daniels Die Set Y136, M22520/5-37 – Daniels Die Set Y138, M22520/5-41 – Daniels Die Set Y140, M22520/5-03 – Daniels Die Set Y196, and M22520/2-01 – Daniels Hand Tool AFM8

* Daniels Manufacturing Corporation
6103 Anno Avenue
Orlando, Florida 32809
Telephone: 407-855-6161
FAX: 407-855-6884

Products for Industrial & Commercial Applications

Dimensions are shown for reference purposes only.

Dimensions are in inches and millimeters unless otherwise specified. Values in brackets are metric equivalents.

Specifications subject to change.

Technical Support Center
1-800-522-6752
www.tycoelectronics.com

Features

- **Snap-on interface facilitates assembly**
- **Conforms to CECC interface specifications for MCX**
- **30% smaller than SMB connectors**
- **Surface mount tape and reel for high volume**



AMP MCX microminiature snap-on connectors offer an excellent blend of size, durability and performance for emerging applications in GPS, automotive and wireless communications. MCX connectors are 30% smaller than traditional snap-on SMB connectors, offering greater packaging density and weight reduction. MCX connectors are mechanically robust with beryllium copper spring fingers rated at a minimum of 500 mating cycles. The snap-on interface facilitates assembly, eliminating the need for a threaded connection, and ensuring full engagement. The forces to engage and disengage have been optimized to ensure ease of mating as well as to prevent damage to PCB solder connections. MCX connectors are designed for broad band performance, DC-6 GHz, and can be utilized for future system upgrades without concerns for performance degradation. AMP MCX connectors are fully mateable with standard MCX connectors and conform to the CECC interface specifications.

MCX connectors are available in a broad range of standard configurations for commercial applications. Tape and reel packaging for MCX surface mount straight and right angle PCB receptacles is available to facilitate high volume pick and place manufacturing. MCX surface mount connectors are designed to withstand infrared reflow, convection and vapor phase soldering and provide a .254 [.010] standoff for optimal board cleaning. MCX plug and jack PCB receptacles also offer a direct board to board solution providing a nominal 7.11 [0.28] separation.

Features

- **26.5 or 40 GHz performance**
- **Superior performance of air dielectric interface**
- **Solid telescoping alignment; no interface damage**
- **Shielded outer contact; low RF leakage**
- **Configurations include bulkhead jacks and plugs for panel and bulkhead applications**
- **3.5 mm Blind Mate has interchangeable mounting/ panel spacing with other blind mate designs per DESC specification**
- **Crimped with standard military SMA hand tool and special locator inserts**
- **Listed under the Component Program of Underwriters Laboratories Inc., File No. E81956**
- **Recognized under the Component Program of Underwriters Laboratories Inc., File No. E81956**
- **Certified by Canadian Standards Association File No. LR 7189**



Material:

Center Contacts — Beryllium Copper or Brass per QQ-B-626, per QQ-C-530, gold plated

Outer Contacts — Beryllium copper per QQ-C-530, gold plated

Plugs — Beryllium copper per QQ-C-530, gold plated

Jack — Stainless steel per ASTM-A-582, gold plated

Shells — Stainless steel per ASTM-A-582, passivated

Panel Shells — Brass per QQ-B-626, nickel plated

Dielectrics — TEFLON per ASTM-D-1457

Grip Rings — Brass per MIL-C-50 or Beryllium Copper per QQ-C-530, nickel plated

Springs — Steel wire per QQ-W-470

Bushings — Stainless steel per ASTM-A-582, passivated

Retention Springs — Beryllium Copper per QQ-C-530, Tin-Lead Plated

Finish:

Passivate per QQ-P-35

Gold per MIL-G-45204

Nickel per QQ-N-290

Tin-Lead per ASTM-B-545

Electrical Characteristics:

Nominal Impedance — 50 ohms

Frequency Range —
3.5 mm: 0 to 26.5 GHz
2.8 mm: 0 to 26.5 GHz
2.8 mm for size 8 cavities: 0 to 40 GHz

Operating Voltage —
RG-402/U Cable (3.58 [.141] O.D.)
500 volts rms at 60 Hz (sea level)
125 volts rms at 60 Hz
(21 336 m [70,000 ft])
RG-405/U Cable (2.18 [.086] O.D.)
335 volts rms at 60 Hz (sea level)
85 volts rms at 60 Hz
(21 336 m [70,000 ft])

Mechanical Characteristics:

Cable Retention —
RG-402/U Cable (3.58 [.141] O.D.)– 60 lb [266.9 N], min.
RG-405/U Cable (2.18 [.086] O.D.)– 30 lb [133.4 N], min.

Connector Mating Force —
3.5 mm: 6 lbs Max.
2.8 mm: 3 lbs Max.

Environmental Characteristics:

Temperature Range —
-65°C to +105°C

Packaging — All connectors are packaged individually unless otherwise noted.

For complete product information, order Catalog 1307191

Products for Industrial & Commercial Applications

Dimensions are shown for reference purposes only.

Dimensions are in inches and millimeters unless otherwise specified. Values in brackets are metric equivalents.

Specifications subject to change.

Technical Support Center
1-800-522-6752
www.tycoelectronics.com

Features

- **Interface designed for multiple interconnects**
- **For high performance microwave system requirements**
- **Bulkhead or panel mount**
- **For semi-rigid cable**



OSP miniature connectors for semi-rigid cable meet high performance requirements for microwave multiple interconnects. Standard units are available in bulkhead or panel mount designs for either direct solder or OSCC solderless compression crimp attachment. Complete tooling for both versions is located in the Tool Section of this catalog.

Jack connectors are available in either float or rigid mount. Rigid mount units will function to specifications up to ±.10 [.004] radial misalignment with the mating plug connector. Applications requiring greater than ±.10 [.004] radial misalignment can use either the float design or floating connector plates with guide pins.

The OSCC Solderless Compression Crimp attachment meets high performance requirements for microwave system applications. The cable attachment is permanent and highly reliable.

Ease of assembly permits users unskilled in soldering techniques to rapidly produce cable assemblies with consistently excellent mechanical and electrical performance.

Features

- **Subminiature version of OSP Blind Mate Connectors**
- **For space savings**
- **Family of connectors and adapters**



OSSP connectors are a subminiature version of the OSP blind mate series. Connectors in this series incorporate the design elements of the OSP interface including the float and mismate features. OSSP blind mates are about 40% smaller than OSPs and are designed to be used in applications where space is at a premium.

A complete family of OSSP connectors and adapters is available including cable connectors, fixed and float mount panel connectors and hermetic connectors. Rigid mount units will function to specifications up to ±.064 [±.0025] radial misalignment with the mating plug connector. Applications requiring greater than ±.064 [±.0025] radial misalignment can use either the float design or floating connector plates with guide pins.

Features

- **Intermateable with Gilbert GPO™ Series**
- **DESC approved**
- **Enhanced performance features**
- **Simplified Assembly**

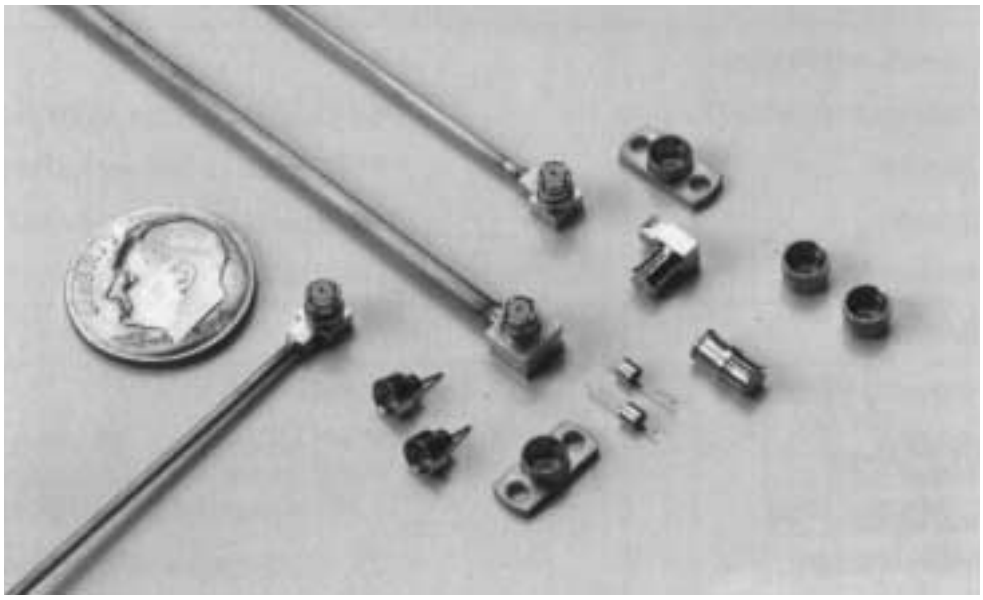

OSMP microminiature push-on coaxial connectors provide solutions for today's modular designs with denser packaging requirements. The extremely small size of the OSMP offers a versatile solution for high density packaging allowing connector center-to-center spacing of 4.32 [0.17]. The push-on interface facilitates easier assembly and test with a positive snap-in feature to indicate a fully mated connection. The rugged OSMP interface can withstand harsh environments of mechanical shock and vibration, typically found in military or aerospace related applications. This OSMP connector interface is the standard used by Defense Electronics Supply Center (DESC) to generate the SMP push-on connector series.

OSMP connectors can be your design solution for mechanical packaging and frequency response. The OSMP interface provides 0.020" of radial misalignment for critical blindmate applications. Mating forces are strictly controlled to ensure reliable connections per mated pair or when simultaneously mating multiple connectors. Cable jacks include an anti-rocking ring to ensure reliable mechanical performance regardless of the operating environment. OSMP connectors offer enhanced broadband VSWR performance of 1.15:1 max thru 26GHz and 1.40:1 max thru 40GHz.

Standard design OSMP configurations include cable connectors, straight and right angle, for 0.047 and 0.085 semi-rigid cable, full detent, limited detent and smooth bore mating shrouds that can be bulkhead or flange mounted and glass feedthroughs for coax to circuit launchers. In-series adapters for module to module intermating and between series adapters for integrating or testing systems or components parameters.

OSMP Shroud and Jack to Jack Adapter Assembly

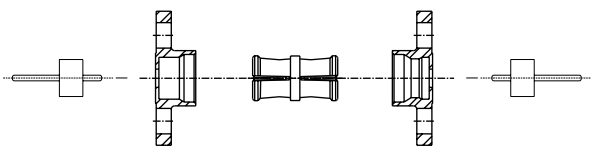

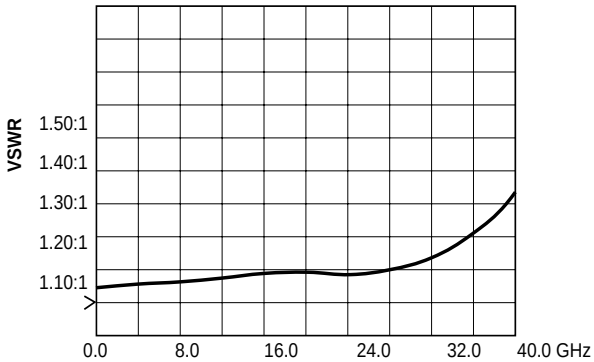

Typical VSWR for OSMP Jack to Jack Adapter
Part Numbers 1059829-1 **and** 1056721-1

For complete product information, order Catalog 1307191

Products for Industrial & Commercial Applications

Dimensions are shown for reference purposes only.

Dimensions are in inches and millimeters unless otherwise specified. Values in brackets are metric equivalents.

Specifications subject to change.

Technical Support Center
1-800-522-6752
www.tycoelectronics.com

Features

- Occupies less (PCB) real-estate than conventional through hole connectors
- 4.2 [.165] fully mated height off PCB
- Performance through 6GHz
- Tape & reel packaging available

Applications

- Telecommunications
- GPS
- Consumer & automotive electronics

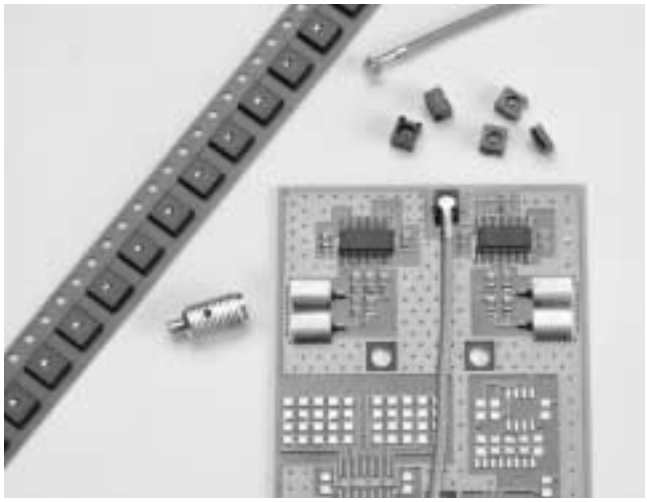

The OSMT Interconnect System is designed to meet the growing demand for surface mount RF connector technology. The OSMT occupies less printed circuit board (PCB) real estate than conventional through hole coaxial connectors. An innovative microstrip mounting pattern and plug receptacle design ensure reliable grounding and PCB retention characteristics. The OSMT Interconnect System also allows closer PCB pitch/spacing, standing a mere 4.2 [.165] (fully mated height) off the board. A new higher cable retention plug receptacle has been added to the OSMT product family. This new design addresses applications where force is applied to the mated connector interface as a result of cable flexure between boards or around other PCB components.

The OSMT Interconnect System consistently achieves broad band electrical performance through 6 GHz with a maximum VSWR of 1.20:1 at 2 GHz and 1.40:1 at 6 GHz. This broad band performance establishes a reliable interface that can be utilized for future system upgrades without concerns for performance degradation.

The OSMT plug receptacle is designed for high volume assembly using surface mount technology and is available in tape and reel packaging for automated pick and place board assembly. The mating cable jack is available terminated to a specially designed coax cable as either a pigtail, jumper or standard interseries connector assembly.

Specially designed engage/disengage tooling is available to ensure proper alignment of the OSMT interface during assembly. The higher retention plug receptacle can be hand engaged as a result of a unique lead-in chamfer design which also aligns the contacts prior to mating to ensure mechanical integrity. Interface durability is rated at 100 mating cycles.

The OSMT Interconnect System is ideal for surface mount applications in telecommunictions, GPS, consumer and automotive electronics. The OSMT provides versatile RF solutions for next generation interconnect needs.

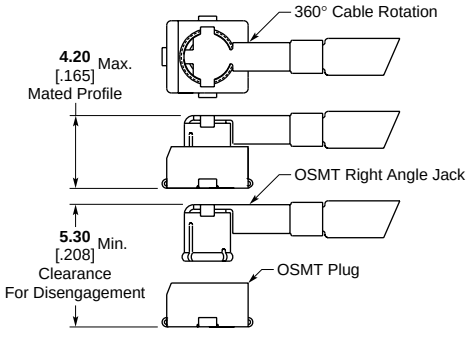

M/A-COM Model Number	Part Number
2367-0000-54	**1251802-1**

High Retention Design

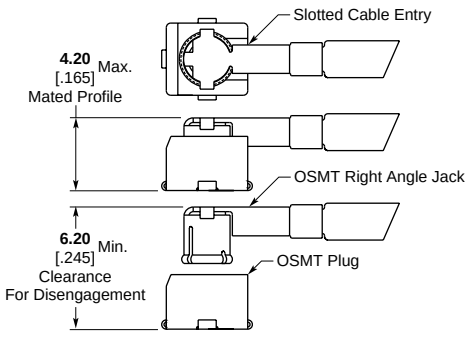

M/A-COM Model Number	Part Number
2367-5006-54	**1055690-1**

For complete product information, order Catalog 1307191

Products for Industrial & Commercial Applications

Dimensions are shown for reference purposes only.

Dimensions are in inches and millimeters unless otherwise specified. Values in brackets are metric equivalents.

Specifications subject to change.

Technical Support Center
1-800-522-6752
www.tycoelectronics.com

Features

- **Solderless Cable Termination**
- **3.0 [.118] Mated Height**
- **Excellent Cable Retention**
- **Usable With Flexible and Semi-Rigid Micro-Coaxial Cables**
- **Tape and Reel Packaging**

AMP revolutionary SMT | QuickGrip product line is designed to meet the growing demand for a reliable, low cost system for direct termination of coax to a printed circuit board (PCB). SMT | QuickGrip technology eliminates the requirement to connectorize the coaxial cable, reducing assembly times and, therefore, cost. The SMT | QuickGrip surface mount device occupies less PCB area than conventional through hole coaxial connectors. An innovative microstrip mounting pattern and cable receptacle design ensures excellent grounding and PCB retention. The SMT | QuickGrip cable termination system stands a mere 3.0 [.118] off the board when mated, allowing for closer pitch/spacing when designing a system. The SMT | QuickGrip provides optimal cable retention for applications where shock, vibration, and/or cable flexure may be encountered. This unique RF design accepts both flexible and semi-rigid micro-coaxial cables while delivering exceptional RF performance up to 3GHz.

These features make this system extremely versatile for design engineers and offer a reliable, cost effective alternative to direct soldering of cable to the PCB. The cable is inserted into the device by means of a simple self-aligning hand tool, eliminating the requirement for skilled personnel. This system removes the possibility of damaged PCBs and cables which are common quality issues associated with direct solder, while providing superior RF performance. The SMT | QuickGrip accommodates multiple cable insertions allowing easy replacement of cables for repairs. This receptacle is designed for high volume assembly using surface mount technology and is available in tape and reel packaging for pick and place board assembly. Pre-

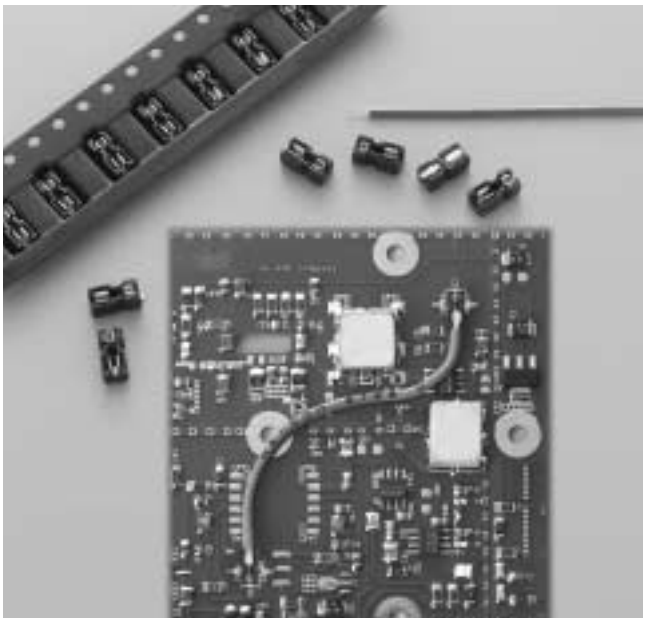

stripped cables and inter-series cable pigtails are available as turnkey solutions for your application needs (i.e.: for use in multi-board applications, for connecting antennas to the PCB, or point to point transmission on the same PCB).

The SMT | QuickGrip cable termination system is ideal for wireless surface mount applications in handsets, pagers and personal digital assistants (PDA).

The SMT | QuickGrip mechanical and electrical performance, coupled with its ease of use, ensure it to be a high quality, reliable solution for current and future interconnect needs. AMP is an ISO9001 certified manufacturer and maintains an SPC controlled manufacturing environment. Please call your local Sales or Distribution office for additional information and qualification samples today.

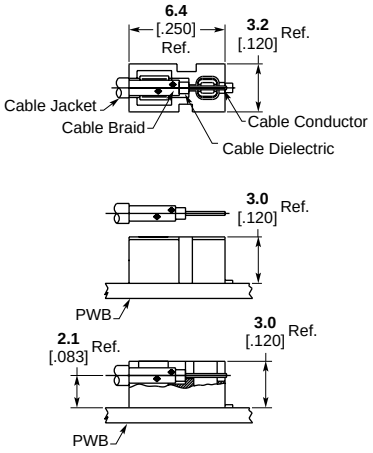

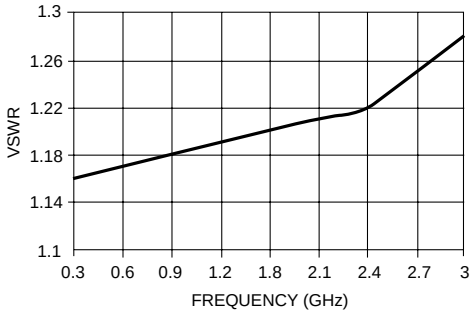

Typical VSWR using SMT | QuickGrip with Omni-Flex 200 Cable

For complete product information, order Catalog 1307191

Products for Industrial & Commercial Applications

Dimensions are shown for reference purposes only.

Dimensions are in inches and millimeters unless otherwise specified. Values in brackets are metric equivalents.

Specifications subject to change.

Technical Support Center
1-800-522-6752
www.tycoelectronics.com

Micro miniature connectors series MMCX (size 0.7/1.6; CECC 22340) are primarily intended for applications where minimum dimensions and space-saving design are required. The connectors are suitable for use up to 6 GHz and are provided with a reliable snap-on coupling. Series MMCX connectors are easy and fast to assemble.

This connector family contains straight and right angled variants for cable or solder connection and SMD connectors for surface mounting technology onto PC boards.

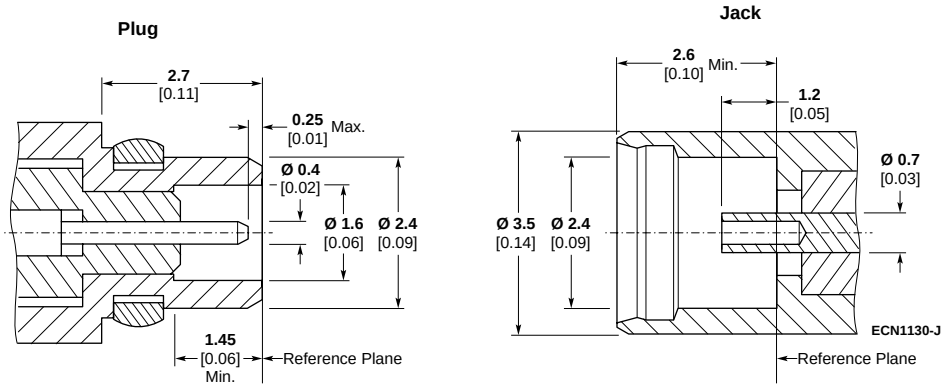

Interface Dimensions

Products for Industrial & Commercial Applications

Dimensions are shown for reference purposes only.

Dimensions are in inches and millimeters unless otherwise specified. Values in brackets are metric equivalents.

Specifications subject to change.

Technical Support Center
1-800-522-6752
www.tycoelectronics.com

Coaxial Connectors

Product Facts

- **Designed to accept 50, 70 and 93 ohm miniature coaxial cables**
- **Three types of connectors, Screw-on Series, Slide-on Series and Quick Connect Series**
- **Temperature range — –65°C to +125°C (with neoprene gasket or bend relief cap) -62°C to +200°C (with silicone gasket or bend relief cap)**
- **Dielectric Withstanding Voltage — 1000 volts RMS at sea level**
- **Contact Resistance — 3 milliohms max., D.C.**
- **Captive Contacts — Terminated connector contacts captivated from movement in both direc**tions



MICRODOT Standard Coaxial Connectors are designed to accept 50, 70, and 93 Ohm miniature coaxial cables. These connectors are available as Screw-On Series, Slide-On Series, or Quick-Connect Series. The Screw-On Series is intermateable with the Gold Plated Crimp Style Coaxial Connector Series and offers the dependability of threaded coupling. For enhanced safety, choose connectors with wire holes.

Choose Slide-On Series for the fastest, most convenient mating, unmating.

The Quick-Connect Series offers the convenience of Slide-On coupling with added retention provided by a snap ring located on the jack/receptacle side.

Consult Tyco Electronics for special cable accommodations and mounting features.

For complete product information, order Catalog 1308638

Products for Industrial & Commercial Applications

Dimensions are shown for reference purposes only.

Dimensions are in inches and millimeters unless otherwise specified. Values in brackets are metric equivalents.

Specifications subject to change.

Technical Support Center
1-800-522-6752
www.tycoelectronics.com

SMA RF Connectors

Product Facts

- **Connector Type — In-line plug/jack, solderable pin**
- **Contact Material and Finish — BeCu/gold plated**
- **Body Material and Finish — BeCu/gold plated, StSt/passivated, StSt/gold plated**
- **Connector Durability — 500 mates**
- **Impedance — 50 ohm**
- **Dielectric Withstanding Voltage — 1000 Volt**s RMS



MICRODOT Connector products have a fifty-year heritage of leadership in precision design and manufacturing of innovative and cost-effective interconnects. These innovative and cost-effective products offer interconnect solutions for a broad range of applications in the Aerospace, Military, Medical, Instrumentation, Communications and Computer markets. MICRODOT RF and coaxial connectors have demonstrated reliable and cost-effective performance in the military and instrumentation markets for over 40 years.

Our line of coaxial connectors includes the SMA styles. These include the products on the following pages along with right angle and crimp-style versions. Currently, products are undergoing qualification testing for listing to MIL-PRF-39012 slash 55 and 59. Future products will include other MIL-PRF-39012 for slash sheets along with SSMA and MCX, and MMCX styles.

Between Series Coaxial Transmission Line Adapters provide convenient transitions between popular series coaxial connectors. The adapter design provides a minimum length consistent with good electrical performance. The small size, low VSWR, and broad frequency coverage permits a wide range of applications in both measurement and systems use.

Design and Construction

The standard units are constructed of stainless steel with passivated finish, nickel plated brass, and gold plated brass. The material and plating is to be consistent with the basic connector series. All dielectrics are TFE fluorocarbon. The center contacts are made of beryllium copper, gold plated.

Types

The straight in-line adapters are available in many combinations of plug and jack (male and female) configurations. Also, popular panel mount versions are cataloged. For special modifications and hermetic seal version, consult Tyco Electronics.

Application

The major application is the requirement for a low VSWR, compact transition in both test system and operating systems. Many panel mount and bulkhead mount versions are available so the designer can use small size connectors for internal design, but adapt to a larger rugged version for external connection.

The following charts identify the types of adapters we offer.

Plug-Plug

	N Series	OSP	OSP Bulkhead	BNC	TNC	7-16	SMB	SMA	OSMP	SSMT	OSMT	Series 1.0/2.3
MCX								✓				
N Series						✓						
BNC							✓					
TNC				✓								
Series 1.6/5.6				✓								✓
SMA 18 GHz	✓	✓	✓	✓	✓		✓		✓	✓	✓	

Jack-Jack

	MCX	N Series N Series Flange Mount N Series Bulkhead	OSP OSP Bulkhead OSP Floating Rear Mount	BNC BNC Bulkhead	TNC TNC Flange Mount TNC Bulkhead	7-16	SMB 75 OHM SMB	OSMP	SSMT	OSMT	Series 1.0/2.3	Series 1.6/5.6
N Series						✓						
BNC							✓					✓
TNC		✓		✓								
SMA SMA Bulkhead SMA 18 GHz	✓	✓	✓	✓	✓		✓	✓	✓	✓		
Series 1.0/2.3												✓

Jack-Plug

	7 mm	7 mm best VSWR	MCX	N Series N Series Flange Mount	OSP OSP Bulkhead	BNC	TNC	7-16	SMB	SMA SMA Flange Mount SMA 18 GHz	OSMP	SSMT + OSMT	DIN-Series 1.0/2.3	DIN-Series 1.6/5.6
7 mm				✓	✓		✓			✓				
7 mm best VSWR				✓			✓							
MCX										✓				
N Series N Series Flange Mount	✓	✓				✓	✓	✓		✓				
OSP OSP Bulkhead	✓									✓				
BNC				✓			✓		✓	✓				✓
TNC TNC Flange Mount	✓	✓		✓		✓				✓				
7-16				✓										
SMB 75 OHM SMB				✓		✓				✓				
SMA SMA Flange Mount SMA 18 GHz	✓		✓	✓	✓	✓	✓		✓		✓	✓		
OSMP										✓				
SSMT + OSMT										✓				
DIN-Series 1.0/2.3														✓
DIN-Series 1.6/5.6						✓							✓	

Products for Industrial & Commercial Applications

Dimensions are shown for reference purposes only.

Dimensions are in inches and millimeters unless otherwise specified. Values in brackets are metric equivalents.

Specifications subject to change.

Technical Support Center
1-800-522-6752
www.tycoelectronics.com

Hand Tools

AMP PRO-CRIMPER II Hand Tools are economy versions of our AMP CERTI-CRIMP Hand Tools, featuring ratcheted crimp control to provide full die closure and help eliminate partial crimps. With an all new design, the PRO-CRIMPER II requires dramatically less hand force to produce the same connection as comparable tools. Dies are interchangeable. It's the most versatile and reliable crimping tool in the mid-price class. Recommended for networking installations, and commercial, industrial and institutional maintenance work. See Catalog 82276 for further information.

Typical PRO-CRIMPER II Hand Tool



Part Number 58433-1
for 50 Ohm BNC Dual "O" Crimp Commercial Connectors

AMP CERTI-CRIMP Hand Tools are our top-of-the-line crimping tools featuring the original ratcheted crimp control. All tools are designed to exacting specifications, and manufactured using the highest quality materials to provide long service life. Recommended for low production runs, repairs and prototype work, and applications requiring consistent, highly-reliable terminations. See Catalog 65780 for further information.



Typical CERTI-CRIMP Hand Tools with Integral (Non-Interchangeable) Dies

Part Number 69140-1
for 50 Ohm BNC Single Crimp Mil Type Connectors

Part Number 69477-1
for 50 Ohm BNC Dual Crimp Mil Type Connectors

Part Number 220015-1
for 50 Ohm N Connectors



CERTI-CRIMP Hand Tool with Interchangeable Dies

Part Number 69710

Pneumatic Tools

The 626 Pneumatic Tool System, as the name implies, will apply a broad range of products in the 6-26 AWG [13-0.12 mm^2] wire range. A basic 626 Pneumatic Tool System requires a power unit, a tool holder, a crimp head assembly and a die set when applicable. This premium system is well suited for low- to medium- volume production and harness assembly operations. Since the crimp head can be rotated to any angle, the operator can also work on more difficult terminations in confined equipment cabinets or enclosures.

Interchangeable tool holder assemblies and crimping heads are available to crimp a variety of products. Crimping heads for the earlier Model 2614 pneumatic power unit can be used with the 626 Pneumatic Tool System. If you are already using AMP hand tools, many crimp heads and die sets can be removed, attached to an adapter with quick pins and used with the 626 Pneumatic Tool System. An adapter is even available to accept lower cost die sets of the PRO-CRIMPER II hand tool. For more information, order catalog 124208.



Part Number 189721-1

Bench Mount Assembly for Pneumatic Tool System (Optional)

Fully adjustable stand allows operator free use of both hands — recommended for maximum productivity.



Part Number 856402-1

Bench-Mounted Machines

AMP-O-LECTRIC bench-mounted, semi-automatic terminating machines may be used to apply RF products such as Commercial BNC and TNC Connectors, Miniature and Standard UHF Connectors, and Braid-Pic Contacts and Terminals. The Model G unit features interchangeable applicators, and is used to apply strip-form contacts. The "Coax" unit is used to apply loose-piece contacts and ferrules with dies that are mounted onto the machine. See Catalog 65828 and Customer Manual 409-2627 for further information.

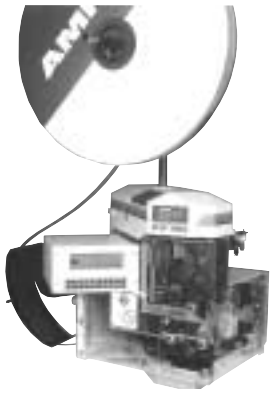

AMP-O-LECTRIC Model G, Part Number 354500 **Series with AMP Crimp Quality Monitor**

Stripping Tools

The hand-operated AMP Coaxial Cable Stripper features interchangeable, color-coded blade cassettes and V-blocks to accommodate 2- or 3-step stripping for cable diameters ranging from 2.54 [.10] through 7.62 [.30]. You strip cable by simply clamping and rotating the tool around the cable. See Instruction Sheet IS 2766 for further information.



For Use With Connector Type	Tool Numbers
BNC Single Crimp	603995-1
BNC Commercial and UHF Miniature	603995-2
UHF Standard	603995-3
BNC Mil Type Dual Crimp	603995-5
BNC Commercial Dual Crimp	603995-6

Semi-Rigid Cable Tooling

The tools listed here are designed specifically to strip and terminate semi-rigid cable. These tools operate basically the same as the flexible cable tools, in that they produce uniform terminations time after time, without heat damage from soldering.

Hand Tool for BNC and TNC Semi-Rigid Cable Connectors



Part Number 59980-1 **Frame only—does not include dies and locator**

Products for Industrial & Commercial Applications
Dimensions are shown for reference purposes only.
Dimensions are in inches and millimeters unless otherwise specified. Values in brackets are metric equivalents.
Specifications subject to change.
Technical Support Center 1-800-522-6752 www.tycoelectronics.com

Hand Tool Kit for SMA and Blind Mate Connectors

Part Number 59981-1



Item Description	Part Numbers	
	AMP	Military (M22520/)
Hand Tool	59980-1	36-01
Plug Locator (without Center Contact)	220220-2	36-06
Plug Locator (with Center Contact)	220221-2	36-04
Jack Locator	220222-2	36-05
Die Set for RG-402/U Cable (3.58 [.141] O.D.)	312253-1	36-03
Die Set for RG-405/U Cable (2.18 [.086] O.D.)	312253-2	36-02
Cutoff Fixture	311395-1	36-09
Cable Dressing Fixture	311396-1	36-07
Trimmer Tool	312317-1	36-08
Cable Bend Fixture Assembly Includes following 6 items:	220224-1	36-10
Bend Segment, RG-402/U (3.18 [.125] Radius)	311386-1	36-11
Bend Segment, RG-402/U (6.35 [.250] Radius)	311386-2	36-12
Bend Segment, RG-405/U	311386-3	36-13
Tool Holder	311392-1	—
Limiting Pin	307581-1	—
Conforming Block	312067-1	—
Hex Wrench	21027-6	—
Carrying Case	13126-1	—
Insert, Case	13127-1	—

Pneumatic Tool for Terminating BNC, TNC, SMA and Blind Mate Connectors

(for RG-402/U and RG-405/U Cable)

Part Number 58318-1*



This pneumatic tool is a bench-mounted, semi-automatic power tool designed for easy operation. The operator needs only to depress the trigger to complete a termination. It is used with the cable preparation machine to produce finished terminations.

*Includes Locators 220241-1 and 308075-2. Dies are not included.

Table of Contents

Connectors and Adapters
LightCrimp Plus No Polish ST and AMP SC Connectors 11002
LightCrimp Epoxyless ST and AMP SC Connectors 11003
ST-Style Connectors 11004-11007
AMP SC-Style Connectors 11008-11013
FSMA Connectors 11014

Actives
9 Pin SC Duplex Molded-Optronic Transceiver 11015-11018
InGaAsP SLED Products 11019,11020
Multimode InGaAs Photodetector Products.....11021-11023

Tooling and Accessories 11024-11029

Products for Industrial & Commercial Applications
Dimensions are shown for reference purposes only.
Dimensions are in inches and millimeters unless otherwise specified. Values in brackets are metric equivalents.
Specifications subject to change.
Technical Support Center
1-800-522-6752
www.tycoelectronics.com

No Polish ST and AMP SC Connectors

LightCrimp Plus Connectors

Product Facts

- **Easy and quick fiber termination**
- **No polishing needed — just strip, cleave and crimp**
- **No curing**
- **Complies with TIA/EIA, IEC, CECC and EM standards**
- **LightCrimp Plus meets TIA/EIA, IEC, CECC and EN specifications and operates in temperatures ranging from -10°C to +60°C**

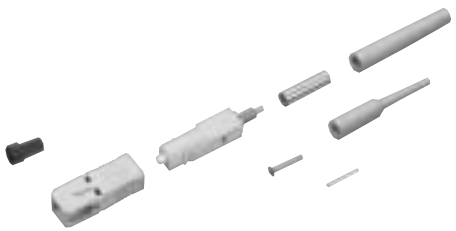

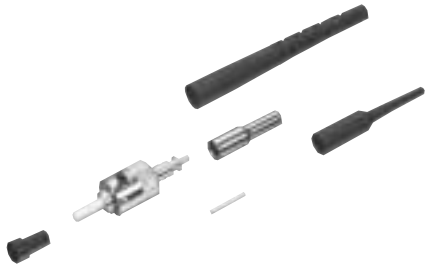

Style	Fiber Type	Ferrule	Part Numbers
ST-Style suitable for 62.5/125µm fiber	Multimode	Ceramic	492642-1
ST-Style suitable for 50/125µm fiber	Multimode	Ceramic	1278082-1
Simplex SC suitable for 62.5/125µm fiber	Multimode	Ceramic	492643-1
Simplex SC suitable for 50/125µm fiber	Multimode	Ceramic	1278079-1
Duplex SC suitable for 62.5/125µm fiber	Multimode	Ceramic	1278009-1
Duplex SC suitable for 50/125µm fiber	Multimode	Ceramic	1278080-1

LightCrimp Plus Termination Kits and Upgrade Kits



LightCrimp Plus Termination Kits

Description	Part Numbers
Universal ST and SC type termination kit includes crimp tool, ST and SC die set, stripper tools, kevlar shears, ST and SC cable holder and cleave tool	1278118-1
ST-Style termination kit includes crimp tool, ST die set, stripper tools, kevlar shears, cable holder and cleave tool	492697-1
SC type termination kit includes crimp tool, SC die set, stripper tools, kevlar shears, cable holder and cleave tool	1278022-1

LightCrimp Plus Individual Tools

Description	Part Numbers
Crimper with Die -Set, ST-Style	492623-1
Crimper with Die -Set, SC-Style	492782-1
Die Set only, ST-Style	492622-1
Die Set only, SC-Style	492783-1
Cleaver, ST and SC-Style	492674-1
Cable Holder/Template, ST-Style	492703-1
Cable Holder/Template, SC-Style	1278023-1

For complete product information, order Catalog 1307895

Products for Industrial & Commercial Applications
Dimensions are shown for reference purposes only.
Dimensions are in inches and millimeters unless otherwise specified. Values in brackets are metric equivalents.
Specifications subject to change.
Technical Support Center
1-800-522-6752
www.tycoelectronics.com

Epoxyless ST and AMP SC Connectors

LightCrimp Epoxyless Connectors



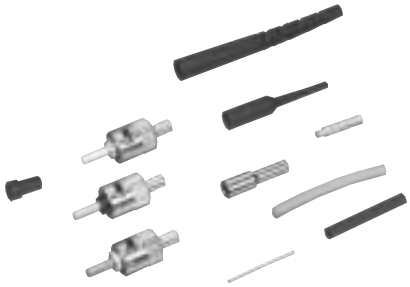

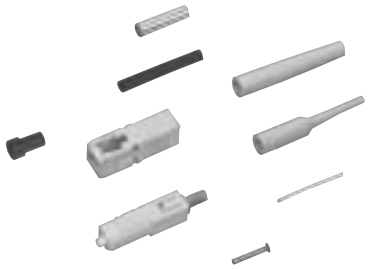

Product Facts

- Singlemode or multimode ST-Style
- Just crimp it on the fiber and polish
- No epoxy
- 2-minute termination
- Innovative crimp design
- Compliant with TIA/EIA-568-A
- No epoxy or adhesives

- Shorter assembly time
- Reduced polishing time
- Lower installed cost
- Secure, repeatable matings
- No need for curing oven or power supply
- Consistent performance over a wide range of temperatures

Instruction Sheet
408-4066 (SC Type)
Instruction Sheet
408-9860 (ST-Type)

Style	Fiber Type	Ferrule	Part Numbers
ST-Style	Multimode	Polymer	492168-1
ST-Style	Multimode	Stainless Steel	504034-1
ST-Style	Multimode	Ceramic	504001-1
ST-Style	Singlemode	Ceramic	504000-1
SC Simplex	Multimode	Ceramic	503692-1
SC Duplex	Multimode	Ceramic	503693-3

LightCrimp Termination Kits - Epoxyless

ST-Style Kits



Description		Part Numbers
Termination Kit	No Microscope	503330-1
	with Premium Microscope	503330-2
	with Pocket Microscope	503330-3
Mini Tool Kit		492322-1

AMP SC Kits

Description		Part Numbers
Termination Kit	No Microscope	503706-1
	Premium Microscope	503706-2

Combo ST-Style and AMP SC Kits

Description		Part Numbers
Termination Kit	No Microscope	503957-1
	with Premium Microscope	503957-2
	with Pocket Microscope	503957-3
Mini-Combo Termination Kit		492543-1
Universal LightCrimp Cleave Tool		503705-1

For complete product information, order Catalog 1307895

Products for Industrial & Commercial Applications
Dimensions are shown for reference purposes only.
Dimensions are in inches and millimeters unless otherwise specified. Values in brackets are metric equivalents.
Specifications subject to change.
Technical Support Center
1-800-522-6752
www.tycoelectronics.com

Singlemode

Ceramic

Performance Characteristics:

Insertion Loss — 0.3 dB typical
Back Reflection — <-40 dB typical
Operating Temp Range — -20°C to +75°C
Durability — 200 cycles

Material:

Ferrule Material — Ceramic
Body Material — Nickel Plated Brass
Coupling Nut Material — Plated Die Cast
Nominal Fiber Size — 126

Features

- **Pre-radiused ferrule finish**
- **Available in bulk packages**

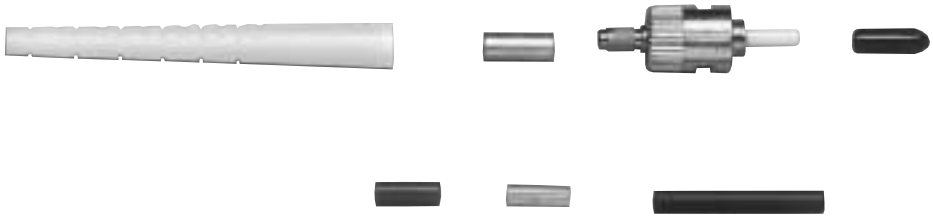

Part Numbers Hole Size (µm)		Boot Type & Color
127	126	
502579-3	502579-2	Bend Limiting/Yellow
502580-3	502580-2	Short/Yellow
—	503613-2	Bare Buffer/Yellow

Bulk packaged epoxy style components and kits are available with other strain relief colors.

ST-Style Application Tooling

Termination Kit: Includes all tools and accessories except Epoxy

Description	Part Number
Termination Kit for all ST-Style Connectors	503746-1

Crimp Tool

Cable Jacket Dia.	Hand-Tool w/Die Set	Hand Tool Only	Die Set Only
3.0	58433-4	58532-1	58424-1

Adhesive

Description	Part Numbers
Epoxy - 25 Bipax pkgs. (2 grams/each)	501195-4
Epoxy - 1 Tube	502418-1
Epoxy Applicator	501473-3

Polishing Films: Package of (10) 8.5 x 11 in. sheets

Description	Part Numbers
5 µm	228433-8
0.3 µm	228433-5
Final Polish Film	502748-2

Miscellaneous Tools

Description	Part Numbers
Polishing Bushing	503337-1
Curing Sleeve	502259-1 (12 pcs.)
Strip Card	501818-1

ST-Style Coupling Receptacles

Features

- **Free-hanging or panel mount design**

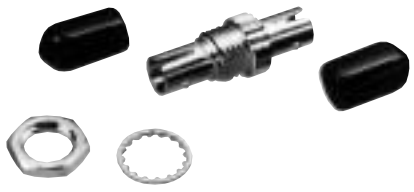

Alignment Sleeve Material	Packaging	Part Numbers
Metal	Single	504021-1
	Bulk (50)	504021-2
Zirconia Ceramic	Single	502750-1
	Bulk (50)	502750-2

For complete product information, order Catalog 1307895

Products for Industrial & Commercial Applications
Dimensions are shown for reference purposes only.
Dimensions are in inches and millimeters unless otherwise specified. Values in brackets are metric equivalents.
Specifications subject to change.
Technical Support Center
1-800-522-6752
www.tycoelectronics.com

Multimode

Ceramic

Performance Characteristics:

Insertion Loss — 0.3dB typical
Operating Temp. Range — -20°C to +75°C
Durability — 500 cycles

Features

- **Epoxy Type Connector**
- **AMP Quick Cure Adhesive Available for use. See page 11010 for information.**
- **Pre-Radiused Ferrule Finish**



Fiber Size	Conn. Type†	Boot Type & Color	Max. Cable Dia.	Part Numbers
125	1	Short/Black	3.0	503569-2*
125	1	Short/Black/Bare Buffer	3.0	503571-3
140	2	Bend Limiting/BL/Bare Buffer	3.0	501380-6
125	2	Bulk Pk. No Boot	3.0	492458-3*
125	2	Short/BL/Bare Buffer	3.0	492458-1
125	2	Short/Black	3.0	492458-2*

† Connector Type 1 – Zirconia Ceramic Ferrule, Polymer Body, Polymer Coupling Nut
Connector Type 2 – Zirconia Ceramic Ferrule, Nickel Plated Brass Body, Nickel Plated Die Cast Coupling Nut
* Bulk packages are 1000 piece quantities.

Stainless Steel

Performance Characteristics:

Insertion Loss — 0.3dB Typical
Operating Temp. Range — -30°C to +70°C
Durability — 500 cycles

Material:

Ferrule — Stainless Steel
Body — Nickel Plated Brass
Coupling Nut — Nickel Plated Die Cast

Features

- **Epoxy Type Connector**
- **AMP Quick Cure Adhesive Available for use. See page 11010 for information.**
- **Pre-Radiused Ferrule Finish**



Fiber Size	Boot Type & Color	Max. Cable Dia.	Part Numbers
125	Bend Limiting/Black	3.0	504008-3
140	Bend Limiting/Black	3.0	504008-7
125	Bulk Pk. No Boot	3.0	5-504008-4

For complete product information, order Catalog 1307895

Products for Industrial & Commercial Applications
Dimensions are shown for reference purposes only.
Dimensions are in inches and millimeters unless otherwise specified. Values in brackets are metric equivalents.
Specifications subject to change.
Technical Support Center
1-800-522-6752
www.tycoelectronics.com

Multimode

Polymer Composite



Performance Characteristics:

Insertion Loss — 0.3dB Typical
Operating Temperature Range — -20°C to +75°C
Durability — 500 Cycles

Material:

Ferrule — Composite Polymer
Body — Polymer
Coupling Nut — Polymer

Features

- **Epoxy Type Connector**
- **AMP Quick Cure Adhesive Available for use. See page 11010 for information.**
- **Pre-radiused Ferrule Finish**

Fiber Size	Connector Type	Boot Type & Color	Max. Cable Dia.	Part Numbers
125	1	Short/Black/Bare Buffer/900 µm	3.0	503415-1
125	1	Short/Black	3.0	503424-3*
125	1	Bulk Pk. No Boot	3.0	503424-1*
125	1	Bare Buffer/Black	.9	503424-5*

* Bulk packages are 1000 piece quantities.

ST-Style Coupling Receptacles



Features

- **Free-hanging or panel mount design**

Alignment Sleeve Material	Packaging	Part Numbers
Polymer Composite	Single	501381-1
	Bulk (1000)	501381-2
Metal	Single	504021-1
	Bulk (50)	504021-2
Zirconia Ceramic	Single	502750-1
	Bulk (50)	502750-2

For complete product information, order Catalog 1307895

Products for Industrial & Commercial Applications
Dimensions are shown for reference purposes only.
Dimensions are in inches and millimeters unless otherwise specified. Values in brackets are metric equivalents.
Specifications subject to change.
Technical Support Center
1-800-522-6752
www.tycoelectronics.com

Multimode

Active Device Mounts

Features

- Designed to accept multimode TO-18, TO-46 and TO-52 active devices
- Nickel plated, die cast zinc
- Mount to PCB or through panel
- Includes positioning ring



Description	Packaging	Style	Height	Part Numbers
Standard height	Single	A	.410	501474-1
Low profile	Single	B	.280	502585-2
Low profile	Single	C	.314	504022-2
Low profile	Bulk (50)	C	.314	504022-3

ST-Style Tooling and Accessories

Termination Kit: Includes all tools and accessories except adhesives

Description	Part Number
Termination kit for all ST-Style connectors.	503746-1

Crimp Tools

Description	Hand Tool with Die Set	Hand Tool Only	Die Set Only
Ceramic/Polymer Ferrules	58433-4	58532-1	58424-1
Stainless Steel Ferrules	58551-1	58532-1	58552-1

Adhesives

Description	Approx. No. of Connectors	Part Numbers
AMP Quick Cure Adhesive Tube (3 grams)	100	492508-1
AMP Quick Cure Adhesive Tube (9 grams)	300	492508-2
Epoxy - (25) Bipax Pkgs	250	501195-4
Epoxy - (1) Tube	400	502418-1
Epoxy Applicator	N/A	501473-3

Polishing Films: Package of (10) 8.5 x 11 in. Sheets
Each package will polish between 60 and 80 connectors

Description	Part Numbers
5 µm	228433-8
1 µm	228433-7
0.3 µm	228433-5

Miscellaneous Tools

Polishing Bushing	Part Numbers
Metal Bushing, Ceramic & Stainless Steel Ferrules	503337-1
Polymer Bushing-Black, Ceramic & Stainless Steel Ferrules	503304-1
Polymer Bushing-Beige, Polymer Ferrule	503304-2
Curing Sleeve/Pieces	502259-1
Strip Card Kit	501818-1

Strain Relief Bulk packages (100 pcs./package)

Color	Bend Limiting Boot	Short Boot	Right Angle	Bare Buffer
Black	502128-9	501457-8	502667-6	503628-2
Red	1-502128-1	1-501457-0	502667-9	2-503628-4
Blue	1-502128-3	1-501457-2	502667-7	503628-9

Build up tubes

Size	Pcs Per Pack	Part Numbers
.900 mm to 3.0 mm	100	502179-9
2.4 mm to 3.0 mm	100	501275-4



Bend Limiting Boot



Short Boot



Right Angle Boot



Bare Buffer Boot

For complete product information, order Catalog 1307895

Products for Industrial & Commercial Applications
Dimensions are shown for reference purposes only.
Dimensions are in inches and millimeters unless otherwise specified. Values in brackets are metric equivalents.
Specifications subject to change.
Technical Support Center
1-800-522-6752
www.tycoelectronics.com

Epoxy Type

Features

- One-piece connector body:
  - Fastest assembly
  - Field installable
- Multi-Piece tunable SM available
  - Use on polish machines that only accept ferrules
- Compliant with
  - JIS C-5973
  - Fibre Channel
  - TIA 568
  - TIA FOCIS-3
- Pre-radiused ferrules
- For 125 µm cladding diameter

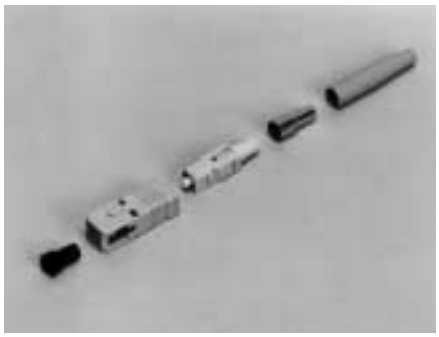

Simplex Connector

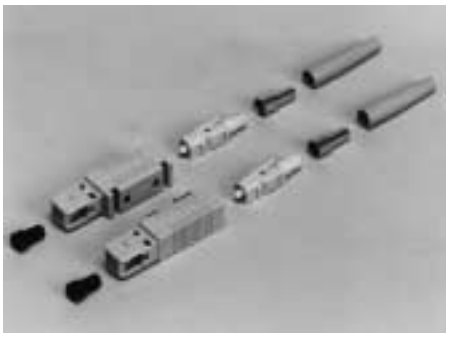

Duplex Connector

Multimode SC-Style Connector Kits

Performance Characteristics:

Insertion Loss — <0.2 dB Typical
Operating Temp. Range — -40°C to +85°C
Durability — 500 Cycles

Ferrule Type	Mode	Jacket Size	Simplex/ Duplex	Part Numbers					
				Indiv. Pack w/ Boot	Bulk Pack No Boots	Bulk Pack w/ Boots	Termination Kit	Inspection Microscope	Instruction Sheet
Ceramic	Multi	3.0 mm	Simplex	503948-1	503948-3	503948-2	503746-7	502970-1	408-4159
Ceramic	Multi	3.0 mm	Duplex	504657-1	504657-3	504657-2	503746-7	502970-1	408-4211
Ceramic	Multi	2.4 mm	Simplex	504930-1	NA	504930-2	503746-7	502970-1	408-4159
Ceramic	Multi	2.4 mm	Duplex	504927-1	NA	504927-2	503746-7	502970-1	408-4211
Ceramic	Multi	2.0 mm	Simplex	504931-1	NA	504931-2	503746-7	502970-1	408-4159
Ceramic	Multi	2.0 mm	Duplex	504928-1	NA	504928-2	503746-7	502970-1	408-4211
Ceramic	Multi	900 µm	Simplex	504932-1	504932-3	504932-2	503746-7	502970-1	408-4159
Ceramic	Multi	900 µm	Duplex	504929-1	NA	504929-2	503746-7	502970-1	408-4211

Singlemode SC-Style Connector Kits

Performance Characteristics:

Insertion Loss — <0.2 dB Typical
Return Loss — <-59 dB Typical
Operating Temp. Range — -40°C to +85°C
Durability — 200 Cycles

Ferrule Type	Mode	Jacket Size	Simplex/ Duplex	Part Numbers					
				Indiv. Pack w/ Boot	Bulk Pack No Boots	Bulk Pack w/ Boots	Termination Kit	Inspection Microscope	Instruction Sheet
Ceramic	Single	3.0 mm	Simplex	504646-2	504646-6	504646-4	503746-7	502970-3	408-4208
Ceramic	Single	3.0 mm	Duplex	504655-1	504655-3	504655-2	503746-7	502970-3	408-4212
Ceramic	Single	2.4 mm	Simplex	504933-2	NA	504933-4	503746-7	502970-3	408-4208
Ceramic	Single	2.4 mm	Duplex	504935-2	NA	504935-4	503746-7	502970-3	408-4212
Ceramic	Single	2.0 mm	Simplex	504934-2	NA	504934-4	503746-7	502970-3	408-4208
Ceramic	Single	2.0 mm	Duplex	504936-2	NA	504936-4	503746-7	502970-3	408-4212
Ceramic	Single	900 µm	Simplex	492123-3	492123-7	492123-4	503746-7	502970-3	408-4208
Ceramic	Single	900 µm	Duplex	NA	NA	504655-4	503746-7	502970-3	408-4212

Tunable Singlemode SC-Style Connector Kits

Performance Characteristics:

Insertion Loss — <0.2 dB Typical
Return Loss — <-59 dB Typical
Operating Temp. Range — -40°C to +85°C
Durability — 200 Cycles

Ferrule Type	Mode	Jacket Size	Simplex/ Duplex	Part Numbers					
				Indiv. Pack w/ Boot	Bulk Pack No Boots	Bulk Pack w/ Boots	Termination Kit	Inspection Microscope	Instruction Sheet
Ceramic	Single	3.0 mm	Simplex	504647-2	NA	504647-4	503746-7	502970-3	408-4284
Ceramic	Single	3.0 mm	Duplex	504656-1	NA	504656-2	503746-7	502970-3	NA
Ceramic	Single	2.4 mm	Simplex	504937-2	NA	504937-4	503746-7	502970-3	408-4284
Ceramic	Single	2.4 mm	Duplex	504939-2	NA	504939-4	503746-7	502970-3	NA
Ceramic	Single	2.0 mm	Simplex	504938-2	NA	504938-4	503746-7	502970-3	408-4284
Ceramic	Single	2.0 mm	Duplex	504940-2	NA	504940-4	503746-7	502970-3	NA

For complete product information, order Catalog 1307895

Products for Industrial & Commercial Applications

Dimensions are shown for reference purposes only.

Dimensions are in inches and millimeters unless otherwise specified. Values in brackets are metric equivalents.

Specifications subject to change.

Technical Support Center
1-800-522-6752
www.tycoelectronics.com

Epoxy Type



3.0mm Boot

SC Strain Reliefs — Jacketed Cable

Description	Part Numbers					
	Jacket Color					
	Black	Yellow	Red	Beige	Blue	Green
3.0 mm Boots	1-503971-0	503971-7	1-503971-1	503971-1	503971-2	1-503971-8
2.4 mm Boots	1-503971-2	503971-8	1-503971-3	503971-3	503971-4	NA
2.0 mm Boots	NA	503971-9	NA	503971-5	503971-6	NA



3.0mm Right Angle Boot

SC Strain Reliefs — Right Angle

Description	Simplex/ Duplex	Part Numbers					
		Jacket Color					
		Black	Yellow	Red	Beige	Blue	Green
3.0 mm Boots	Simplex	1-1278705-5	NA	1-1278705-6	1-1278705-4	1-1278705-3	1-1278705-8
	Duplex	2-1278705-1	NA	2-1278705-2	2-1278705-0	1-1278705-9	2-1278705-3



900µm Short Boot



900µm Boot

SC Strain Reliefs — 900 micron

Description	Part Numbers					
	Jacket Color					
	Black	Yellow	Red	Beige	Blue	Green
900 µm Boots	503628-2	503628-5	2-503628-4	2-503628-0	503628-9	503628-7
Short (10 mm) 900 µm Boots	1278309-1	NA	1278309-3	NA	1278309-2	NA

SC-FC Univeral Adapter

- Singlemode
- 0.3 dB typical insertion loss
- 0.5 maximum insertion loss
- Less than –45 dB back reflection
- Converts SC receptacle into FC receptacle
- Converts FC plug into SC plug
- Small size



FC-SC Adapter

Description	Part Numbers
Ceramic Sleeve	1374370-1
Phosphor Bronze Sleeve	1374370-2

AMP SC Low Loss Loopback Connector

Part Number 503141-1 Product Facts

- 62.5/125 Multimode
- Use for Equipment Testing
- 0.6 dB Insertion Loss
- 0.5" Ferrule Centerline

Part Number 503141-2 Product Facts

- 50/125 Multimode
- Use for Equipment Testing
- 0.8 dB Insertion Loss
- 0.5" Ferrule Centerline

Part Number 504883-1 Product Facts

- Singlemode
- Use for Equipment Testing
- 1.5 dB Insertion Loss
- 0.5" Ferrule Centerline

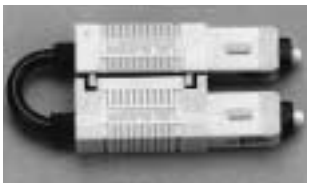

For complete product information, order Catalog 1307895

Products for Industrial & Commercial Applications

Dimensions are shown for reference purposes only.

Dimensions are in inches and millimeters unless otherwise specified. Values in brackets are metric equivalents.

Specifications subject to change.

Technical Support Center
1-800-522-6752
www.tycoelectronics.com

Multimode

Other Tooling Accessories

Polishing Films: Package of (10) 8.5 x 11 in. sheets

Description	Part Numbers
5 µm	228433-8
0.3 µm	228433-5
Final Polish Film	502748-2

Miscellaneous Tools

Description	Part Numbers
Polishing Bushing	502631-1
Curing Sleeve	502656-1 (12 pcs.)
Strip Card	501818-1

Adhesive

Description	Part Numbers
Epoxy - 1 Bipack (4 grams)	504035-1
Epoxy - 1 Tube	502418-1
Epoxy Applicator	501473-3

AMP SC Tooling and Accessories

Termination Kit: Includes all tools and accessories except adhesives.

Description	Part Number
Termination kit for all SC connectors	503746-7

Crimp Tools

Cable Jacket diameter (mm)	Handtool w/die set	Handtool Only	Die Set Only
3.0	503911-1	58588-1	503910-1
2.0 & 2.4/2.5 & 3.0	492026-1	58588-1	492025-1

Adhesives

Description	Approx. No. of Connectors	Part Numbers
AMP Quick Cure (3 grams) Adhesive Tube	100	492508-1
AMP Quick Cure (9 grams) Adhesive Tube	300	492508-2
Epoxy - (25) Bipax Pkgs	250	501195-4
Epoxy - (1) Tube	400	502418-1
Epoxy Applicator	N/A	501473-3

Polishing Films: Package of (10) 8.5 x 11 in. Sheets. Each package will polish between 60 and 80 connectors.

Description	Part Numbers
5 µm	228433-8
0.3 µm	228433-5

Miscellaneous Tools:

Polishing Bushing	Curing Sleeve/ Pieces	Strip Card Kit
502631-1 (Polymer)	502656-1	501818-1
503787-1 (Metal)		

Adapters

Simplex and Duplex Adapters

Features

- Suitable for Any SC Connector
- Available with Metal or Ceramic Alignment Sleeves
- Choice of Housing Colors
- Duplex Adapters Accept Two Simplex Connectors or One Duplex Connector
- Assortment of Hybrid Configurations Available
- Mounting Screws Available



SC Simplex Adapter - Plastic

SC Simplex Adapter - Plastic

Alignment Sleeve Material/Application	Singlemode (SM)/ Multimode (MM)	Housing Color	Part Numbers	
			Single Pkg.	50 pc. Bulk Pkg.
Metal	MM only	Beige	504614-1	504614-2
Metal	MM/SM	Black	502632-7	1-502632-4
Metal	MM/SM	Blue	502632-8	1-502632-5
Metal	MM/SM	Beige	502632-9	1-502632-6
Ceramic	SM/MM	Black	1-502632-0	1-502632-7
Ceramic	SM/MM	Blue	1-502632-1	1-502632-8
Ceramic	SM/MM	Beige	1-502632-2	1-502632-9
Ceramic/APC SM	SM APC	Green	2-106901-6	—



Flange-less SC Simplex Adapter - Plastic

Flange-less SC Simplex Adapter - Plastic

Alignment Sleeve Material	Singlemode (SM)/ Multimode (MM)	Housing Color	Part Numbers	
			Single Pkg.	50 pc. Bulk Pkg.
Metal	MM/SM	Black	504632-1	—
Ceramic	SM/MM	Black	504632-2	—
Metal	MM/SM	Blue	504632-3	—
Ceramic	SM/MM	Blue	504632-4	—



SC Simplex Adapter - Metal

SC Simplex Adapter - Metal

Alignment Sleeve Material	Singlemode (SM)/ Multimode (MM)	Housing Color	Part Numbers	
			Single Pkg.	50 pc. Bulk Pkg.
Metal	MM/SM	Electroless Nickel	1278348-1	1278348-2
Ceramic	SM/MM	Electroless Nickel	1278348-3	1278348-4



Flange-less SC Simplex Adapter - Metal

Flange-less SC Simplex Adapter - Metal

Alignment Sleeve Material	Singlemode (SM)/ Multimode (MM)	Housing Color	Part Numbers	
			Single Pkg.	50 pc. Bulk Pkg.
Metal	MM/SM	Electroless Nickel	1278348-5	1278348-6
Ceramic	SM/MM	Electroless Nickel	1278348-7	1278348-8



SC Duplex Adapter - Plastic

SC Duplex Adapter - Plastic

Alignment Sleeve Material/Application	Singlemode (SM)/ Multimode (MM)	Housing Color	Part Numbers	
			Single Pkg.	50 pc. Bulk Pkg.
Metal	MM only	Black	504640-4	—
Metal	MM only	Beige	504640-1	504640-2
Metal	MM/SM	Black	502776-7	1-502776-3
Metal	MM/SM	Blue	502776-8	1-502776-4
Metal	MM/SM	Beige	502776-9	1-502776-5
Ceramic	SM/MM	Black	1-502776-0	1-502776-6
Ceramic	SM/MM	Blue	1-502776-1	1-502776-7
Ceramic	SM/MM	Beige	1-502776-2	1-502776-8
Ceramic	SM/MM	Black No Logo	—	2-502776-5
Ceramic	SM APC	Green	2-502776-3	—

For complete product information, order Catalog 1307895

Products for Industrial & Commercial Applications

Dimensions are shown for reference purposes only.

Dimensions are in inches and millimeters unless otherwise specified. Values in brackets are metric equivalents.

Specifications subject to change.

Technical Support Center
1-800-522-6752
www.tycoelectronics.com

Adapters

Duplex Adapters

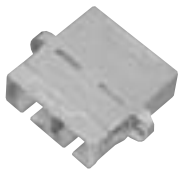

SC Duplex Adapter

SC Duplex Adapter - Metal

Alignment Sleeve Material	Singlemode (SM)/ Multimode (MM)	Housing Color	Part Numbers	
			Single Pkg.	50 pc. Bulk Pkg.
Metal	MM/SM	Electroless Nickel	1278049-1	1278049-2
Ceramic	SM/MM	Electroless Nickel	1278049-3	1278049-4

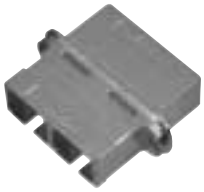

SC Duplex Metal Adapter w/ EMI Shielding

Shielded SC Duplex Adapter - Metal

Alignment Sleeve Material	Singlemode (SM)/ Multimode (MM)	Housing Color	Part Numbers	
			Single Pkg.	50 pc. Bulk Pkg.
Metal	MM/SM	Electroless Nickel	1374223-1	1374223-2
Ceramic	SM/MM	Electroless Nickel	1374223-3	1374223-4

- **Designed to prevent EMI leak**
- **Ideal for OC-48 applications**

SC to ST Hybrid Adapters



SC to ST Simplex Adapter - Plastic

SC to ST Simplex Adapter - Plastic

Alignment Sleeve Material	Singlemode (SM)/ Multimode (MM)	Housing Color	Part Numbers	
			Single Pkg.	50 pc. Bulk Pkg.
Metal	MM/SM	Black	502780-1	502780-7
Metal	MM/SM	Blue	502780-2	502780-8
Metal	MM/SM	Beige	502780-3	502780-9
Ceramic	SM/MM	Black	502780-4	1-502780-0
Ceramic	SM/MM	Blue	502780-5	1-502780-1
Ceramic	SM/MM	Beige	502780-6	1-502780-2



Flange-less SC to ST Simplex Adapter - Plastic

Flange-less SC to ST Simplex Adapter - Plastic

Alignment Sleeve Material	Singlemode (SM)/ Multimode (MM)	Housing Color	Part Numbers	
			Single Pkg.	50 pc. Bulk Pkg.
Metal	MM/SM	Black	504634-1	—
Ceramic	SM/MM	Black	504634-2	—



SC to ST Simplex Adapter - Metal

SC to ST Simplex Adapter - Metal

Alignment Sleeve Material	Singlemode (SM)/ Multimode (MM)	Housing Color	Part Numbers	
			Single Pkg.	50 pc. Bulk Pkg.
Metal	MM/SM	Electroless Nickel	1278350-1	1278350-2
Ceramic	SM/MM	Electroless Nickel	1278350-3	1278350-4

For complete product information, order Catalog 1307895

Products for Industrial & Commercial Applications

Dimensions are shown for reference purposes only.

Dimensions are in inches and millimeters unless otherwise specified. Values in brackets are metric equivalents.

Specifications subject to change.

Technical Support Center
1-800-522-6752
www.tycoelectronics.com

Adapters

SC to ST Hybrid Adapters



Flange-less SC to ST Simplex Adapter - Metal

Flange-less SC to ST Simplex Adapter - Metal

Alignment Sleeve Material	Singlemode (SM)/ Multimode (MM)	Housing Color	Part Numbers	
			Single Pkg.	50 pc. Bulk Pkg.
Metal	MM/SM	Electroless Nickel	1278350-5	1278350-6
Ceramic	SM/MM	Electroless Nickel	1278350-7	1278350-8



SC to ST Duplex Adapter - Plastic

SC to ST Duplex Adapter - Plastic

Alignment Sleeve Material	Housing Color	Part Numbers	
		Single Pkg.	50 pc. Bulk Pkg.
Metal (MM Only)	Black	504663-5	—
Metal (MM Only)	Beige	504663-4	—
Metal	Black	503137-1	503137-7
Metal	Blue	503137-2	503137-8
Metal	Beige	503137-3	503137-9
Ceramic	Black	503137-4	1-503137-0
Ceramic	Blue	503137-5	1-503137-1
Ceramic	Beige	503137-6	1-503137-2

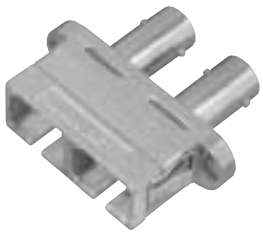

SC to ST Duplex Adapter - Metal

SC to ST Duplex Adapter - Metal

Alignment Sleeve Material	Singlemode (SM)/ Multimode (MM)	Housing Color	Part Numbers	
			Single Pkg.	50 pc. Bulk Pkg.
Metal	MM/SM	Electroless Nickel	1278051-1	1278051-2
Ceramic	SM/MM	Electroless Nickel	1278051-3	1278051-4

Products for Industrial & Commercial Applications

Dimensions are shown for reference purposes only.

Dimensions are in inches and millimeters unless otherwise specified. Values in brackets are metric equivalents.

Specifications subject to change.

Technical Support Center
1-800-522-6752
www.tycoelectronics.com

Multimode

FSMA Connectors

Performance Characteristics:

Insertion Loss — 1.5 dB Typical
Temperature Range — -55°C to +105°C
Durability — 200 cycles



Features

- **Industry compatible with 905 (FSMA-I) and 906 (FSMA-II) style connectors**
- **Terminates fiber sizes from 125 through 1000 microns in diameter**
- **Design parameters conform to NATO and IEC interface standards**

Instruction Sheet
FSMA 905 & 906 — 408-9863

Ferrule Material	Connector Body Material	Fiber Diameter (µm)	Nominal Jacket O.D.				
			3.1mm		4.3mm		5.3mm
			905	906	905	906	905
Stainless Steel	Nickel-Plated Brass	125	504566-1	504014-1	504567-1	—	504568-1
		140	504566-2	1-504014-0	504567-2	—	504568-2
		231	504566-7	2-504014-6	—	4-504014-1	—
		1000	3-504566-0	—	—	—	2-504568-8
Ceramic	Nickel-Plated Brass	125	—	504015-1	—	504015-2	—

FSMA Adapters





Adapter Features

- **Precision mating adapter for all FSMA connectors**
- **In-line splice or panel mount design**

Active Device Mount Features

- **Designed to house TO-18, TO-46, and TO-52 devices**
- **Constructed of nickel-plated die cast zinc alloy or stainless steel**
- **Mounts to PC board or through panel**

Description	Part Numbers
FSMA Adapters	
Hex Flange, Stainless Steel	501049-1
Hex Flange, Stainless Steel, Counterbore, Sealed	501050-1
Fixed Flange, Nickel-Plated Brass	504026-1
In-Line, Stainless Steel	504028-1
In-Line, Nickel-Plated Brass, Counterbore	504030-1
In-Line, Stainless Steel, Counterbore, Short	504031-1
FSMA Active Device Mounts	
PC Mount Receptacle, Die Cast	502136-1
PC Mount Receptacle, Die Cast, Bulk Packaged	502136-2
PC Mount Receptacle, Stainless Steel	501055-1

FSMA Tooling and Accessories

Termination Kit

Description	Part Number
Termination kit for all FSMA connectors	503746-2

Crimp Tools

Description	Cable Jacket diameter (mm)	Handtool w/die set	Handtool Only	Die Set Only
All FSMA	3.0	58551-1	58532-1	58552-1 (hex die)

Adhesives

Description	Approx. No. of Connectors	Part Numbers
Epoxy - (25) Bipax Pkgs	250	501195-4
Epoxy - (1) Tube	400	502418-1
Epoxy Applicator	N/A	501473-3

Polishing Films

Package of (10) 8.5 x 11 in. Sheets.
Each Package will polish between 60 and 80 connectors.

Description	Part Numbers
5 µm	228433-8
1 µm	228433-7
0.3 µm	228433-5

Miscellaneous Tools

Description	Part Numbers
Curing Sleeves/Pieces (12)	502249-1
Strip Card Kit	501818-1
Polishing Bushing	228025-1
FSMA Polishing Length Gage (not included with termination kit)	501301-1

For complete product information, order Catalog 1307895

Products for Industrial & Commercial Applications
Dimensions are shown for reference purposes only.
Dimensions are in inches and millimeters unless otherwise specified. Values in brackets are metric equivalents.
Specifications subject to change.
Technical Support Center
1-800-522-6752
www.tycoelectronics.com

9 Pin SC Duplex Molded-Optronic Transceiver

Features

- Design utilizing advanced molded optical lens technology
- Data rates of 100 Mb/s (Fast Ethernet), 125 Mb/s (FDDI), 125 Mb/s (LCF), 156 Mb/s (ATM), and 270 Mb/s (FC)
- Multi-sourced 9 pin single row footprint
- Process compatible (i.e. wave soldering)
- Compatible with standard FDDI and ATM chip sets
- Single +5 volts power supply
- ECL compatible
- SC style optical interface
- Wide 25 to 75% duty cycle operation

Applications

Standards

- Fast Ethernet
- FDDI
- ATM
- Fiber Channel

Equipment

- FDDI Networks
  - Concentrator
  - Routers
  - Bridges
  - Adapter Cards
- Point-to-Point Links
- Network Interface Cards


Photo 111124

Technological advancements in the areas of optical polycarbonate precision molding and resin circuit board manufacturing have enabled Tyco Electronics to introduce a line of low cost fiber optic transceivers. Tyco Electronics has incorporated these design breakthroughs into their new 9 pin SC Duplex transceiver products. High quality polycarbonate camera lens technology has been configured for 1300 nm fiber optics thus providing high performance at an economical price. Precision chip and wire processes used with advanced resin circuit boards make it possible for mass production of low cost modules. AMP Molded-Optronic 9 pin SC Duplex Transceivers are standard compliant and multisourced high density footprint products that utilize SC connector interfaces capable of delivering the power budget requirements needed for 100 Base FX, FDDI PMD, FDDI LCF PMD, ATM and Fiber Channel applications.

Tyco Electronics' patented wide duty cycle compensation featured in the receiver section eliminates concern of excessive data dependent jitter in Fast Ethernet application where 4B 5B encoding schemes require 40 to 60% operability.

These products incorporate internally produced 1300 nm surface emitting LEDs and photodiodes.

Transceivers are supplied with process plugs to protect optical ports during soldering and cleaning processes.

Tyco Electronics also offers versions of the above transceivers in dual ST connectorized packages.

Units are supplied with process plugs which seal the optical connector interface during soldering and cleaning processes.

Data Rate	Part Numbers
100/125 Mb/s	269142-1
125 Mb/s	269142-2 Tallboy
156 Mb/s	269143-1
156 Mb/s	269143-2 Tallboy

For complete product information, order Catalog 1307895

Products for Industrial & Commercial Applications
Dimensions are shown for reference purposes only.
Dimensions are in inches and millimeters unless otherwise specified. Values in brackets are metric equivalents.
Specifications subject to change.
Technical Support Center
1-800-522-6752
www.tycoelectronics.com

9 Pin SC Duplex Molded-Optronic Transceiver

Description	Part Numbers
100/125 Mb/s	269142-1
125 Mb/s Tallboy	269142-2
156 Mb/s	269143-1
156 Mb/s Tallboy	269143-2

Transmitter Performance Specifications:
(TA = 0 to 70°C, V_{CC}-V_{EE} = 4.75 to 5.25V DC)

Parameter	Symbol	125 Mb/s Min.	125 Mb/s Typical	125 Mb/s Max.	156 Mb/s Min.	156 Mb/s Typical	156 Mb/s Max.	Units
Data rate (NRZ)	B	0	—	125	0	—	156	Mb/s
Optical output (avg.)[5]	P_{OH}	-19	—	-14	-19	—	-14	dBm
Extinction ratio (P_{OL}/P_{OH}) x 100%		—	—	10	—	—	10	%
Optical wavelength [2]	λout	1270	1330	1380	1270	1330	1380	nm
Spectral width [2]	Δλ	—	130	—	—	130	200	nm
Duty cycle	—	0	—	100	0	—	100	%
Output risetime [2]	t_{TLH}	.6	1.5	3.5	.6	1.2	2.5	ns
Output falltime [2]	t_{THL}	.6	1.5	3.5	.6	1.2	2.5	ns
Pulse width distortion [1]	—	—	—	0.6	—	—	0.5	ns
Data dependent jitter [1]	t_{DDJ}	—	—	0.6	—	—	0.3	ns
Random jitter [1]	t_{RAN}	—	—	0.6	—	—	0.5	ns
Data [3, 4]	V_{IL}	V_{CC}-1.81	—	V_{CC}-1.475	V_{CC}-1.81	—	V_{CC}-1.475V	
	V_{IH}	V_{CC}-1.165	—	V_{CC}-.88	V_{CC}-1.165	—	V_{CC}-.88	V
Inputs	I_{IL}	-2	—	—	-2	—	—	µA
	I_{IH}	—	—	400	—	—	400	µA
Reference voltage (output)	V_{BB}	V_{CC}-1.396	—	V_{CC}-1.24	V_{CC}-1.396	—	V_{CC}-1.24	V
Power supply voltage	V_{CC}-V_{EE}	4.75	5.0	5.25	4.75	5.0	5.25	V
Supply current	I_{CC} or I_{EE}	—	—	140	—	—	140	mA
Operating temperature	T_A	0	—	70	0	—	70	°C

[1] Driven with a differential signal.
[2] Limits on optical wavelength, spectral width, output risetime, and output falltime are controlled by figures below for 125 Mb/s.
[3] When V_{BB} is used as the reference voltage.
[4] Voltage levels listed are compatible with 100K Series ECL logic levels. The parts are 100% compatible with 10K and 10KH Series logic when driven with differential signals.
[5] .275 NA 62.5/125 µm Fiber.
Note: LED emitters comply with IEC 825-1 and -2 requirements for eye safety.

Absolute Maximum Ratings: All Modules

Parameter	Symbol	Min.	Typical	Max.	Units
Storage temperature	—	-40	—	85	°C
Lead soldering limits	—	—	—	240/10	°C/s
Supply voltage	V_{CC}-V_{EE}	-.2	—	7.00	V

For complete product information, order Catalog 1307895

Products for Industrial & Commercial Applications
Dimensions are shown for reference purposes only.
Dimensions are in inches and millimeters unless otherwise specified. Values in brackets are metric equivalents.
Specifications subject to change.
Technical Support Center
1-800-522-6752
www.tycoelectronics.com

9 Pin SC Duplex Molded-Optronic Transceiver

Description	Part Numbers
100/125 Mb/s	269142-1
125 Mb/s Tallboy	269142-2
156 Mb/s	269143-1
156 Mb/s Tallboy	269143-2

Receiver Performance Specifications:
(TA = 0 to 70°C, V_{CC}-V_{EE} = 4.75 to 5.25V DC)

Parameter	Symbol	125 Mb/s Min.	Typical	Max.	156 Mb/s LCF Min.	Typical	Max.	Units
Data rate (NRZ)	B	10	—	125	10	—	156	Mb/s
Optical input (avg.)[3, 5] sensitivity	P_{IN}	-33.5	—	-14.0	-32.5	—	-14.0	dBm
Optical wavelength	λin	1270	—	1380	1270	—	1380	nm
Duty cycle	—	25	50	75	25	50	75	%
Output risetime	t_{TLH}	.5	—	2.5	.5	—	2.5	ns
Output falltime	t_{THL}	.6	—	2.5	.5	1.8	2.5	ns
Pulse width distortion [1]	—	—	—	0.4	—	—	0.4	ns
Data dependent jitter	t_{DDJ}	—	—	0.8	—	—	0.8	ns
Data output [4]	V_{OH}	V_{CC}-1.025	—	V_{CC}-.88	V_{CC}-1.025	—	V_{CC}-.88	V
	V_{OL}	V_{CC}-1.81	—	V_{CC}-1.62	V_{CC}-1.81	—	V_{CC}-1.62	V
Signal detect (output)	V_A	V_{CC}-1.025	—	V_{CC}-.88	V_{CC}-1.025	—	V_{CC}-.88	V
	V_D	V_{CC}-1.81	—	V_{CC}-1.62	V_{CC}-1.81	—	V_{CC}-1.62	V
P_{IN} power levels (avg.):								
Deassert [2]	P_D	-41.0 or P_B	—	-32.5	-39.0 or P_B	—	-32.5	dBM
Assert	P_A	-39.5	—	-31	-38	—	-31.0	dBM
Hysteresis	—	1.5	2.0	—	1.5	2.0	—	dB
Signal detect delay time:								
Deassert	—	—	—	350	—	—	50	µs
Assert	—	—	—	100	—	—	50	µs
Power supply voltage	V_{CC}-V_{EE}	4.75	5.0	5.25	4.75	5.0	5.25	V
Supply current	I_{CC} or I_{EE}	—	—	150	—	—	150	mA
Operating temperature	T_A	0	—	70	0	—	70	°C

[1] Measured using FDDI test signaling format, ANSI X3.166-1989.
[2] P_B = Power at which BER = .01, whichever is greater.
[3] Ons Eye opening, V_{CC} = 5V, 25°C, 2^{15} -1 PRBS, 0.275 NA 62.5/125 µm Fiber, BER = 2.5 x 10^{-10} for 125 Mb/s.
[4] Voltage levels listed are compatible with 100K Series ECL logic levels. The parts are 100% compatible with 10K and 10KH Series when driven with differential signals.
[5] Onsec Eye opening, V_{CC} = 5V, 25°C, 2^{23} -1 PRBS, 0.275 NA 62.5/125 µm Fiber, BER = 1.0 x 10^{-10} for 156 Mb/s.
Note: Pin plating: 150 microinches minimum Sn93 Pb7 over 50/150 microinches Ni. Case material: Polyethersulfone UL 94 V-O rated.
Note: Mates with optical connectors meeting JIS C 5973.

9 Pin SC Duplex Molded-Optronic Transceiver

Description	Part Numbers
100/125 Mb/s	269142-1
125 Mb/s Tallboy	269142-2
156 Mb/s	269143-1
156 Mb/s Tallboy	269143-2

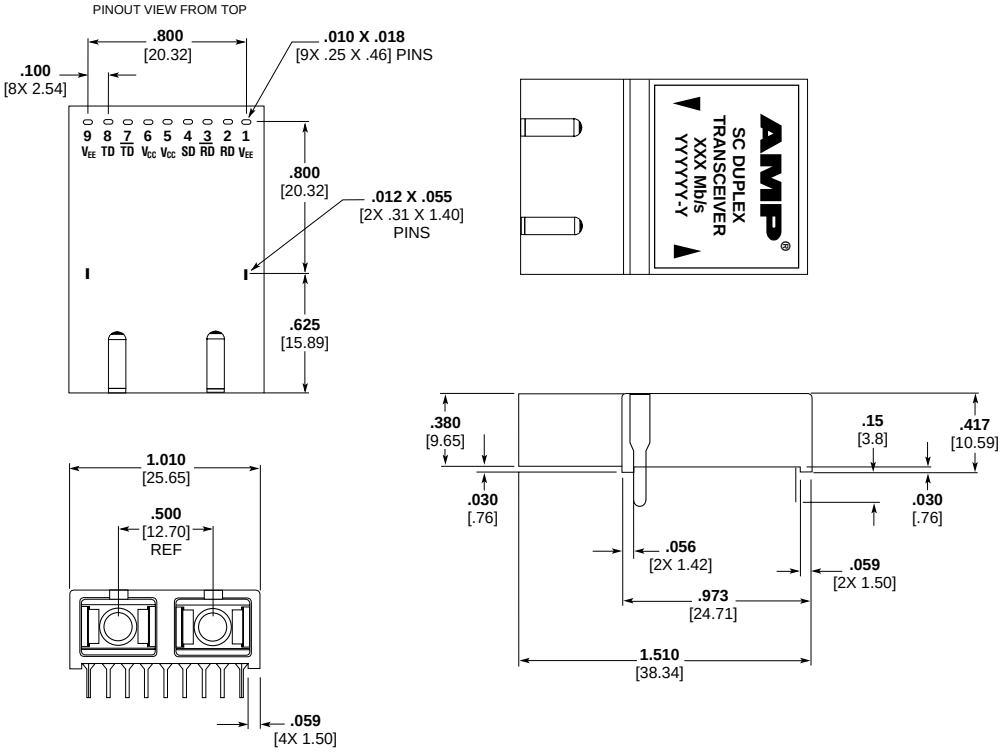

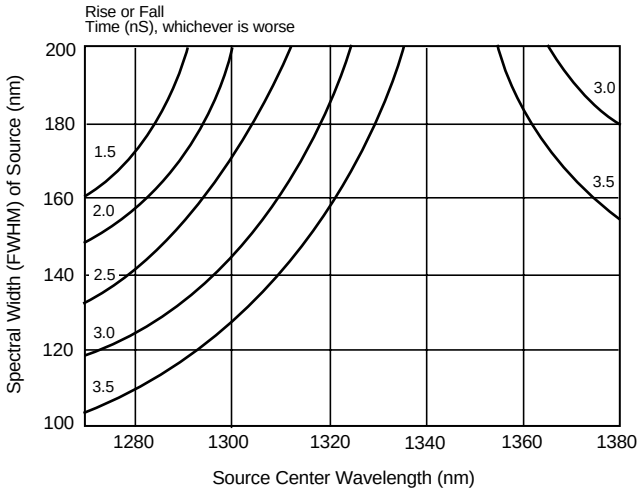

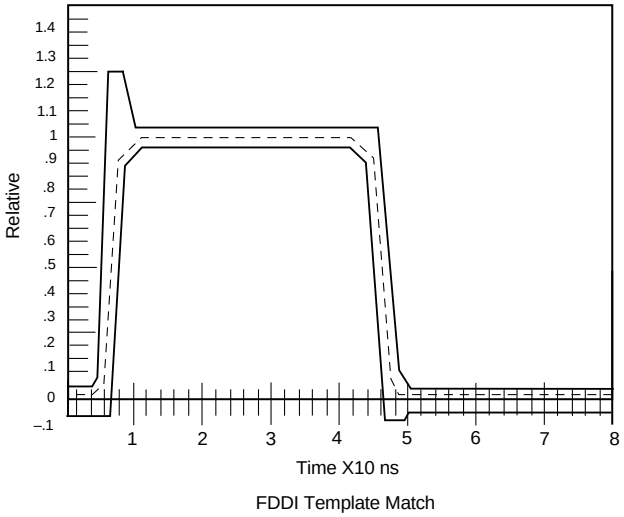

FDDI Template Match

For complete product information, order Catalog 1307895

Products for Industrial & Commercial Applications
Dimensions are shown for reference purposes only.
Dimensions are in inches and millimeters unless otherwise specified. Values in brackets are metric equivalents.
Specifications subject to change.
Technical Support Center
1-800-522-6752
www.tycoelectronics.com

1.3 µm LED

Features

- **High coupled power, typically 75 µW into 62.5 µm fiber**
- **High reliability MTTW 2.3 x 10^8 hours**
- **Wavelength centered at 1320 nm**
- **Hermetically sealed TO-18 style package installed in industry standard ADMs**
- **Functional over –40°C to 85°C operating temperature range**



TO



ST Style



Low Profile ST

The AMP InGaAsP SLED products offer high coupled powers for digital fiber optic transmission applications.

Compatible with industry standards, the AMP LED ADMs consist of hermetically sealed TO-18 style SLEDs which have been actively aligned for maximum coupled power. The devices are permanently fixed in place to promote stable performance over all operating conditions.

The ST connectors are suitable for both panel/bulk-head and PC board mounting.

Each unit is burned-in. Coupled power, capacitance, leakage current and spectral characteristics are measured on each unit.

No data is supplied with the unit. A lot code is used for traceability.

For additional information on product qualification, reference Product Specification 108-55008.

For additional information on product performance, reference Application Note 82924.

Specifications: 100mA Forward Current, 25°C

Parameter	Part No. Suffix	Test Conditions	Units	Min.	Typ.	Max.
Coupled power 50 µm fiber	-1	—	µW dBm	10 –20	20 –17	—
62.5 µm fiber	-1	—	µW dBm	30 –15	45 –13	—
50 µm fiber	-2	—	µW dBm	20 –17	30 –15	—
62.5 µm fiber	-2	—	µW dBm	50 –13	75 –11	—
Wavelength Spectral FWHM	—	—	nm nm	1290 —	— —	1350 170
Forward voltage Capacitance Leakage current	—	f=1MHz, 0V –2V	V pF µA	— — —	1.4 15 —	1.7 50 2
Rise/fall time	—	100mA 50% duty cycle 12.5 MHz	ns	—	2.5	4
Bandwidth	—	—	MHz	—	115	—
$\Delta\lambda/\Delta T$ $\Delta P_{out}/\Delta T$	—	–40 to +85°C	nm/°C dB/°C	—	.38 –.03	—
Reliability MTTW	—	–1.5dB EOL	hrs	—	2.3 x 10^8	—

Note: dBm is rounded to nearest integer value.

	Connector Interface Part Numbers	
	TO	**ST Style**
Standard	259006-1	259012-1
Premium	259006-2	259012-2

Note: Coupled power in specifications.

For complete product information, order Catalog 1307895

1.3 µm LED

Coupled Power vs. Drive Current

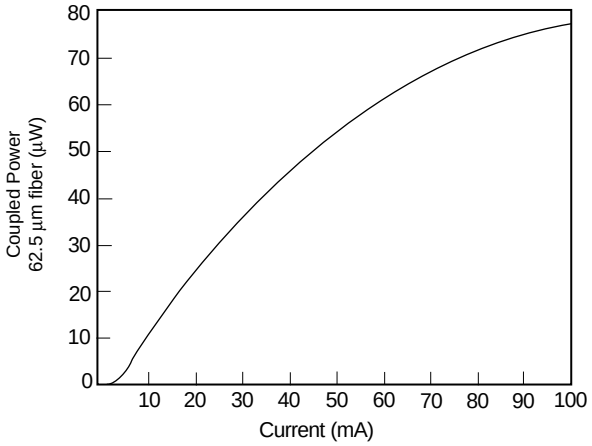

Test Conditions: 25°C

Coupled Power into 62.5 µm Fiber vs. Temperature

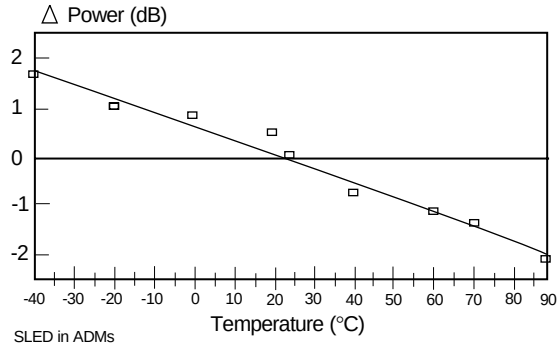

SLED in ADMs

SLED FWHM in ADM over Temperature

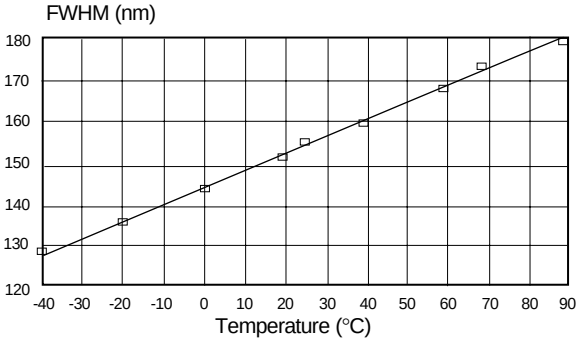

Test Conditions: 100 mA DC

SLED FWHM vs. Drive Current normalized to 100 mA DC

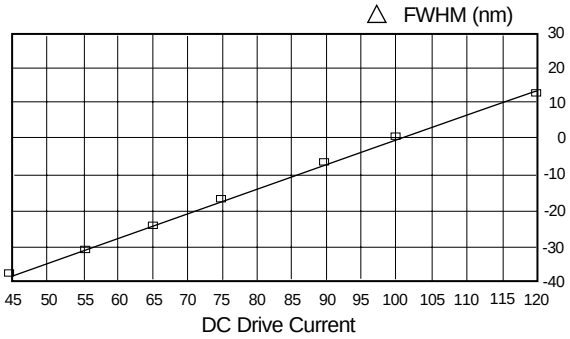

Test Conditions: 25°C, units in ADM

Absolute Maximum Rating

	Units	Min.	Max.
Operating temperature	C	–40	85
Storage temperature	C	–40	125
Reverse voltage	V	—	2
Forward current	mA	—	150

Mechanical Dimension Reference

Figure #	1	2	3
Page No.	11023	11023	11023

For complete product information, order Catalog 1307895

Products for Industrial & Commercial Applications
Dimensions are shown for reference purposes only.
Dimensions are in inches and millimeters unless otherwise specified. Values in brackets are metric equivalents.
Specifications subject to change.
Technical Support Center
1-800-522-6752
www.tycoelectronics.com

Multimode

Features

- High reliability passivated planar structure
- High responsivity
- Low dark current
- Low capacitance
- Hermetically sealed TO-18 style package installed in industry standard ADMs
- –40° to +85°C operating temperature range


TO


ST Style


SC


FC


Low Profile ST

The AMP multimode design using InGaAs PIN photodetectors offer high responsivity for nearly all digital and analog fiber optic applications. The unique design balances high-speed performance with noise-free linear output. Spectral response has been optimized for the long wavelength region of 1150 nm to 1600 nm. Every component delivered has passed extensive high-temperature screening for long-term reliability.

Compatible with industry standards, AMP Active Device Mount components incorporate hermetically sealed TO-18 style PIN packages which have been actively aligned for optimal performance. SC and ST modules are suitable for both panel/bulkhead and PC board mounting. Each unit is burned-in.

Responsivity, dark current and capacitance are measured on each unit. No data is supplied with the unit. A lot code is used for traceability.

For additional information on product qualification, reference Product Specification 108-55009.

Specifications: 25°C, –5 Volts

Parameter	P/N	Test Conditions	Units	Min.	Typ.	Max.
Responsivity 50 µm 62.5 µm	 -1 -1	 LED source of 10 µW	 A/W A/W	 .60 .50	 .71 .61	—
50 µm 62.5 µm	-2 -2	LED source of 10 µW	A/W A/W	.75 .65	.83 .80	—
Spectral Response	-1, 2	—	nm	1150	—	1600
Capacitance	-1, 2	f=1MHz	pF	—	1.5	1.7
Dark current	-1, 2	—	nA	—	1.5	5
Rise/fall	-1, 2		ns			1
Bandwidth	-1, 2	—	GHz	—	1.5	—
Reliability	-1, 2	I_D>5nA	hrs	—	2.0×10^8	—

	Connector Interface Part Numbers					
	TO	FC	SC	ST Style	Low Profile ST	w/ Process Cap
Standard	259007-1	259015-1	269027-1	259013-1	259013-6	259013-8
Premium	259007-2	—	—	259013-2	—	—

For complete product information, order Catalog 1307895

Products for Industrial & Commercial Applications
Dimensions are shown for reference purposes only.
Dimensions are in inches and millimeters unless otherwise specified. Values in brackets are metric equivalents.
Specifications subject to change.
Technical Support Center
1-800-522-6752
www.tycoelectronics.com

Multimode

Capacitance

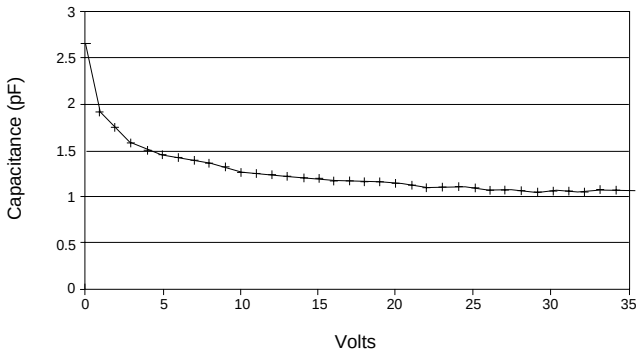

Dark Current

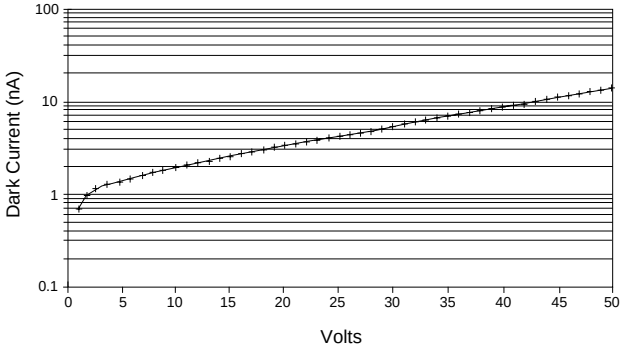

Responsivity vs. Temperature

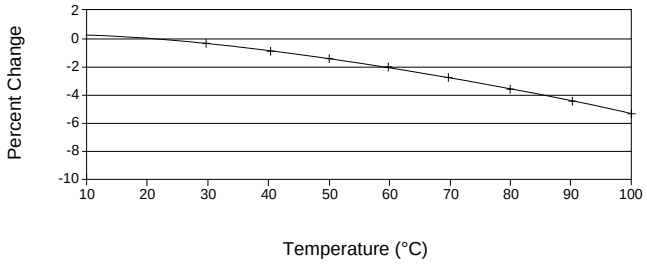

Dark Current vs. Temperature

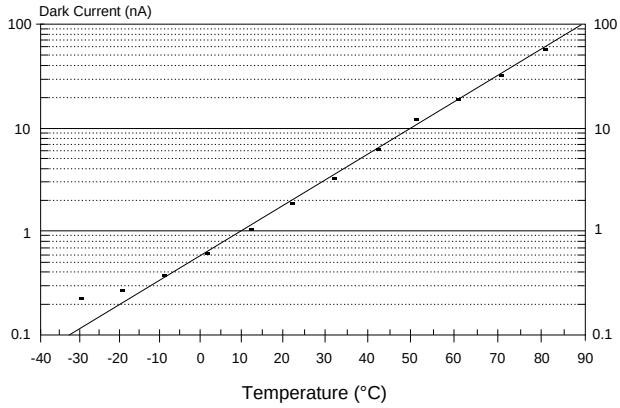

Absolute Maximum Rating

	Units	Min.	Max.
Operating temperature	C	–40	85
Storage temperature	C	–40	125
Reverse current	mA	—	1

Mechanical Dimension Reference

Figure #	1	2	3	4
Page No.	11023	11023	11023	11023

For complete product information, order Catalog 1307895

Products for Industrial & Commercial Applications
Dimensions are shown for reference purposes only.
Dimensions are in inches and millimeters unless otherwise specified. Values in brackets are metric equivalents.
Specifications subject to change.
Technical Support Center
1-800-522-6752
www.tycoelectronics.com

Mechanical Dimensions

TO Package PIN + LED

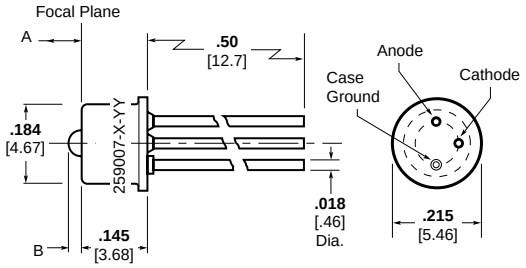

Dimension A	Dimension B	Type	Part Numbers
.081	.026	LED	259006-1
2.05	.660	PIN	259007-1
.060	.020	LED	259006-2
1.52	.510	PIN	259007-2

Figure 1

SC Type Board Mount/Panel Mount PIN

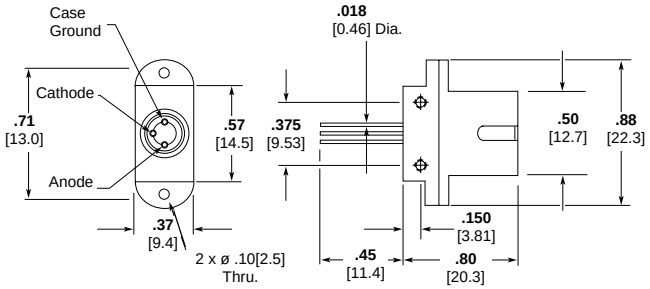

Description	Part Number
120μm	269027-1

Figure 2

ST Style Board Mount/Panel Mount PIN + LED

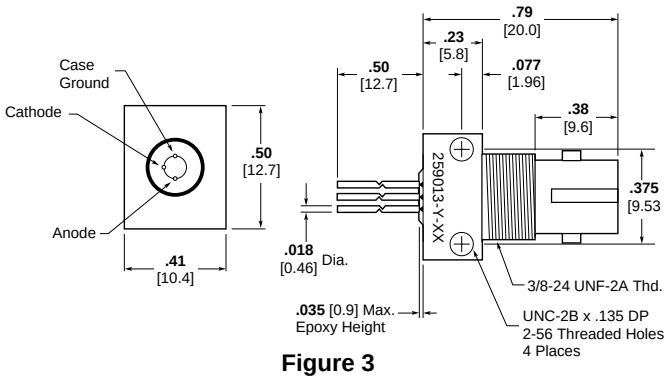

Description	Type	Part Numbers
Standard	LED	259012-1
	PIN	259013-1
Premium	LED	259012-2
	PIN	259013-2

Figure 3

FC Type Panel Mount PIN

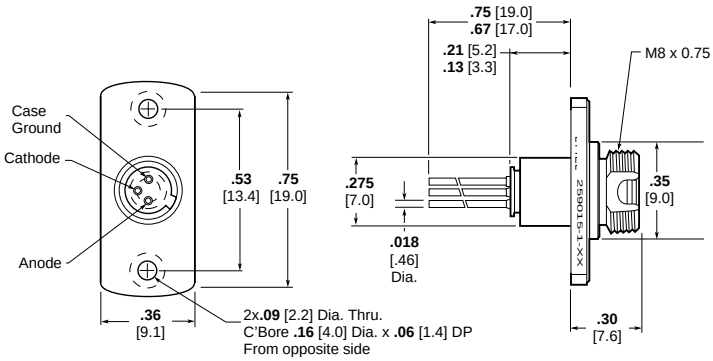

Part Number
259015-1

Figure 4

For complete product information, order Catalog 1307895

Products for Industrial & Commercial Applications
Dimensions are shown for reference purposes only.
Dimensions are in inches and millimeters unless otherwise specified. Values in brackets are metric equivalents.
Specifications subject to change.
Technical Support Center
1-800-522-6752
www.tycoelectronics.com

Kits

Professional Installer Kits Epoxy Type Connectors

The Professional Installer Kits from Tyco Electronics provide the professional installer with all the necessary tools required to perform terminations on the complete line of AMP epoxy type fiber optic connector products. Included in the kit is a crimp tool, with a set of interchangeable dies. In addition, an Inspection Microscope and Epoxy Curing Oven are included with specific kits.

Part Numbers 501258-7

For: FSD Connectors, ST-Style, FC, FSMA, AMP SC

Includes all tools necessary to terminate the connectors listed above. This is a complete kit which includes:

- **Crimp tool and crimping dies**
- **Polishing bushings**
- **Polishing film**
- **Cable and fiber strippers**
- **Microscope with tripod and power source (see page 11027 for details)**
- **Epoxy curing oven (see page 11027 for details)**

Part Number 501258-8

The same as 501258-7 except the epoxy oven operates at 220 VAC.

Part Number 501258-9

The same as 501258-7 except kit does not contain microscope or epoxy curing oven.

Note: Epoxy not included in kit. It must be purchased separately. See specific product page for part numbers.



Termination Kits Epoxy Type Connectors

Termination kits provide all the materials and tools (except epoxy, curing oven, and microscope) required to terminate a particular type of fiber optic connector. Tools are conveniently packaged in a handy carrying case. The kits contain polishing materials for approximately 60 connectors. The consumable items in the kit can be purchased separately.

For: AMP SC, FSMA, FC, ST-Style, FSD, RSD

Termination Kit

Connector Type	Part Numbers
ST-Style	503746-1
FSMA	503746-2
FSD	503746-6
Next Generation FC and SC	503746-7

Cyclops Cable Stripper
Part Number 91300-1

Ideal for stripping twisted-pair (UTP & STP) and fiber optic cables up to 0.43" diameter.



Termination Tool Kits No Epoxy Type

For LightCrimp Plus Termination Tool Kits, see page 11002.

For LightCrimp Termination Tool Kits, see page 11003.

For Additional Tooling Information, Request Global Application Tooling Catalog 296240.

For complete product information, order Catalog 1307895

Products for Industrial & Commercial Applications

Dimensions are shown for reference purposes only.

Dimensions are in inches and millimeters unless otherwise specified. Values in brackets are metric equivalents.

Specifications subject to change.

Technical Support Center
1-800-522-6752
www.tycoelectronics.com

Adhesives and Epoxies

AMP QC Quick Cure Adhesive

Product Facts

- One-part adhesive eliminates the hassle and mess of mixing
- Applies easily and cures in minutes without heat or UV light
- Works with all standard multimode epoxy-style connectors without performance penalty
- Faster procedure for time-saving productivity and lower installed costs



Tube Size	Typical Connector Terminations Per Tube*	Part Numbers
3 grams	100	492508-1

*Your individual termination techniques will affect the number of terminations per tube.

Epoxies

EPO-TEK Epoxies

Tyco Electronics offers EPO-TEK epoxies formulated for fiber optic applications. Each epoxy is a pre-measured, two-part material packaged in a bi-pack. Simply remove the bi-pack's center divider and work the epoxy together.

Product Facts

- EPO-TEK Epoxy
- Pre-measured bi-packs for consistent results
- Ideal for bonding fibers
- Long relative pot life
- High service temperature



Description	Part Numbers
Adhesive Applicator	5014473-3

Description	Part Numbers
Individual Epoxies	
4-gram pack EPO-TEK 353ND	504035-1
Recommended Accessories	
Syringe manual use (3ccs)	501473-3

Epoxy Specifications 600-4EPO	Part Numbers 504035-1
Cure Time Room Temp.	15 min @ 115°C
Pot Life	4 hr.
Color Before Curing	Amber
Color After Curing	Red
Viscosity (cps)	2000
Maximum Temperature	200°C
Glass Transition Temp.	124°C

For complete product information, order Catalog 1307895

Products for Industrial & Commercial Applications
Dimensions are shown for reference purposes only.
Dimensions are in inches and millimeters unless otherwise specified. Values in brackets are metric equivalents.
Specifications subject to change.
Technical Support Center
1-800-522-6752
www.tycoelectronics.com

Epoxies





TRA-CON Epoxy-Bipax

Properties	Use With	Number of Packs/ Size (gr)	Approx. Number of Conn.	Part Numbers
General Purpose Use:				
Low Viscosity High Impact Blue for Easy Polish 30 min. Pot Life Operating Temperature: -60 to 100°C Ambient Cure: 24 hr. @ 25°C Oven Cure: 2 hr. @ 65°C or 10 min. at 110°C	FSD ST-Style FC AMP SC FSMA	25/2	250	501195-4

Hysol Epoxy-Tubes

Properties	Use With	Number of Packs/ Size (gr)	Approx. Number of Conn.	Part Numbers
General Purpose Use:				
Medium Viscosity Blue Color for Easy Polish 30 min. Pot Life Oven Cure: 30 min. @ 100°C	FSD ST-Style FC AMP SC FSMA	1 set of tubes	400	502418-1

Description	Part Numbers						
	FSMA	Multimode ST-Style	Singlemode ST-Style	FC	FSD/RSD	AMP SC	LightCrimp XTC
Hand Polishing Film: (Pack of 10 sheets)							
15µm	—	—	—	—	—	—	228433-9
5µm	228433-8	228433-8	228433-8	228433-8	228433-8	228433-8	228433-8
1µm	228433-7	228433-7	—	—	228433-7	—	228433-7
0.3µm	228433-5	228433-5	228433-5	228433-5	228433-5	228433-5	228433-5
Final Polish Film*	—	—	502748-2	502748-2	—	502748-2	—
Consumables Kit**	502306-1	502306-1	502306-2	502306-2	502306-1	502306-2	—
Polish Length Gauge	501301-1	—	—	—	—	—	—

*Pack of 5.
**Contains all consumable supplies for at least 100 connectors.

For complete product information, order Catalog 1307895

Products for Industrial & Commercial Applications
Dimensions are shown for reference purposes only.
Dimensions are in inches and millimeters unless otherwise specified. Values in brackets are metric equivalents.
Specifications subject to change.
Technical Support Center
1-800-522-6752
www.tycoelectronics.com

Tools

Epoxy Curing Oven

The Epoxy Curing Oven reduces the time required to cure epoxy in fiber optic connectors. The oven provides a uniform, controlled curing environment which increases productivity and consistency of terminations. The unit accepts all AMP connectors. The unit comes equipped to cure up to four duplex connectors and 12 single connectors at once. Optional adapter blocks are available to cure 8 duplex or 24 single connectors. It features a variable temperature control from 60°C to 125°C and includes a thermometer and cable support bracket. 110 and 220 VAC units are available.

IS 804-9460



Description	Part Numbers
110 VAC	502134-1
220 VAC	503134-2
Adapter Block for 8 Duplex Connectors	502222-1
Adapter Block for 24 Single Connectors	502129-1

Inspection Microscope Kits

The Inspection Microscope is designed specifically for visual examination of terminated or cleaved ends of singlemode and multimode fibers in both field and laboratory applications. This portable, hand-held unit provides magnification for optimum detection of flaws. It operates on AC or battery power. The complete microscope kit includes a handy carrying case, tripod stand, AC adapter and all adapters needed to inspect the following connectors: FSMA, FSD, ST-Style, FC, F07 and SC.

Product Facts

- **Pre-centered adapter mount provides quick, easy focusing, and changing of connectors**
- **Kg-3 infrared filter to protect the user**
- **Durable, lightweight A.B.S. plastic microscope body**
- **Lockable, high-density polyethylene, double-well carrying case with antistatic foam cutouts**

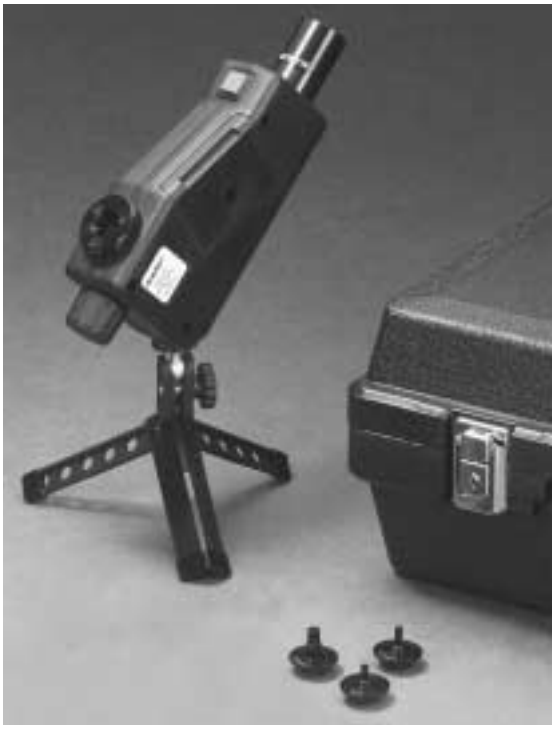

For complete product information, order Catalog 1307895

Products for Industrial & Commercial Applications
Dimensions are shown for reference purposes only.
Dimensions are in inches and millimeters unless otherwise specified. Values in brackets are metric equivalents.
Specifications subject to change.
Technical Support Center
1-800-522-6752
www.tycoelectronics.com

Tools

Microscope with 10x Objective Kits

Components Description	Part Numbers	Qty.	Adapter Markings	Microscope Kit 502970-1	502970-2	502970-3	502970-4
100x Microscope (10x Eyepiece)	502978-1	1	—	yes	yes	—	—
200x Microscope (20x Eyepiece)	502978-2	1	—	—	—	yes	yes
FSMA	502971-1	1	FSMA	yes	yes	yes	yes
D4	502975-1	1	D4	yes	yes	yes	yes
Universal 2.5 mm**	502977-1	1	—	yes	yes	yes	yes
FC/APC adapter (not included with kit)	504617-1	1	—	—	—	—	—
SC/APC adapter (not included with kit)	504618-1	1	—	—	—	—	—
Power Supply Adapter							
110V Power Supply	502967-1	1	—	yes	—	yes	—
240V Power Supply	502968-1	1	—	—	yes	—	yes
IEC Pigtail Cord	502966-1	1	—	—	yes	—	yes
Batteries							
"AA" Alkaline	N/A	2	—	yes	yes	yes	yes
Bulb, 2.8V Lamp Red on/off Switch	502964-1	1	—	yes	yes	yes	yes
Bulb, 2.5V Lamp Green on/off Switch	1278471-1	1	—	—	—	—	—
Tripod	502965-1	1	—	yes	yes	yes	yes
Carrying Case	N/A	1	—	yes	yes	yes	yes
Accessories							
20x Eyepiece	502969-2	—	—	—	—	Included	Included
10-20x Zoom Eyepiece	502969-3	—	—	—	—	—	—
10x Eyepiece	502969-1	—	—	Included	Included	—	—
Adapters 100x Microscope Version							
F07	492547-1	—	—	—	—	—	—
MT-RJ	492749-1	—	—	—	—	—	—
MPO	492414-1	—	—	—	—	—	—
MPO APC	492415-1	—	—	—	—	—	—
LIGHTRAY MPX	492526-1	—	—	—	—	—	—
LIGHTRAY MPX APC	492527-1	—	—	—	—	—	—
ESCON	492477-1	—	—	—	—	—	—

** Inspects ST-Style, SC, FC, FSD and RSD connectors.

Inspection Microscope Pocket Model

Product Facts

- **100 power magnification**
- **Compact hand-held size**
- **Range of adapters available for fiber optic connectors**
- **Built-in illumination**
- **Battery operated**



Description	Part Number
Microscope	1278132-1
SMA Adapter	1278133-1
2.5 mm Universal Adapter (SC or ST)	1278134-1

Danger: Active fibers should never be viewed through a microscope.

IS 408-4497

Scribe Tool

Sapphire-Tipped Scribe Tool
Part Number 504064-1

Replacement Blades
Part Number 504290-1

Product Facts

- **Long-lasting sapphire blade**
- **Pen-type case**



IS 408-4293

For complete product information, order Catalog 1307895

For complete product information, order Catalog 1307895

Products for Industrial & Commercial Applications
Dimensions are shown for reference purposes only.
Dimensions are in inches and millimeters unless otherwise specified. Values in brackets are metric equivalents.
Specifications subject to change.
Technical Support Center
1-800-522-6752
www.tycoelectronics.com

Hand Tools



PRO-CRIMPER II
Instruction Sheet 408-4020

PRO-CRIMPER II Hand Tool

Connector	Cable Jacket Diameter (mm)	Part Numbers		
		Hand Tool w/ Die Set	Hand Tool Only	Die Set Only
FSMA	3.0	58551-1	58532-1	58552-1 (hex die)
ST-Style Ceramic	3.0	58433-4	58532-1	58424-1
ST-Style Stainless Steel	3.0	58433-4	58532-1	58424-1
ST-Style Polymer Composite	3.0	58433-4	58532-1	58424-1
ST-Style Ceramic Used with Loose Tube	3.8	—	58532-1	503890-1
ST-Style Stainless Steel (504xxx series only)	3.0	58551-1	58532-1	58552-1
Next Generation FC	3.0	503911-1	58588-1	503910-1
	2.0 & 2.4/2.5 & 3.0	492026-1	58588-1	492025-1
Next Generation AMP SC	3.0	503911-1	58588-1	503910-1
	2.0 & 2.4/2.5 & 3.0	492026-1	58588-1	492025-1
FSD - Ceramic	DUALAN & LDD	58519-1	58532-1	58510-1
FSD - Polymer	DUALAN & LDD	58519-1	58532-1	58510-1
FSD/MC - Ceramic	DUALAN & LDD	58519-1	58532-1	58510-1
FSD Breakout Kit	DUALAN & Protection Kit	58519-1	58532-1	58510-1
LightCrimp ST-Style	3.0	503568-1	58532-2	503567-1
LightCrimp SC	3.0	503699-1	58532-2	503698-1
LightCrimp Plus and LightCrimp ST-Style	3.0	492623-1	58532-2	492622-1
LightCrimp Plus and LightCrimp SC	3.0	492782-1	58532-2	492783-1

Polishing Bushing, Curing Sleeves and Strip Card Kits

Connector	Cable Jacket Diameter (mm)	Part Numbers		
		Polishing Bushing	Curing Sleeves/Pieces	Strip Card Kit
FSMA	3.0	228025-1	502249-1 (12 pcs.)	501818-1
ST-Style				
Ceramic, Stainless Steel	3.0	503337-1 (Metal) 503304-1 (Black Polymer)	502259-1 (12 pcs.)	501818-1
Polymer Composite	3.0	503304-1 (Beige Polymer)	502259-1 (12 pcs.)	501818-1
FC	3.0	504862-1	504862-2 (6 pcs.)	501818-1
AMP SC	3.0	502631-1 (Black Polymer)	502656-1 (1 pc.)	501818-1
FSD - Ceramic & Polymer	DUALAN & LDD	501795-1*	502023-1**	501818-1
FSD/MC - Ceramic	DUALAN & LDD	503366-1*	503366-1**	501818-1
FSD Breakout Kit	DUALAN & Protection Kit	—	—	501818-1

* Curing Assembly Kit with polishing bushing.
** Curing Assembly Kit without polishing bushing.

Technicians Guide to Fiber Optics

Part Number 228838-1



An excellent introductory and intermediate level fiber optic text, this informative book covers the fundamentals of data transmission, fiber theory, fiber characteristics, sources and detectors, connectors and splice products, and other fiber optic components.

For complete product information, order Catalog 1307895

Products for Industrial & Commercial Applications
Dimensions are shown for reference purposes only.
Dimensions are in inches and millimeters unless otherwise specified. Values in brackets are metric equivalents.
Specifications subject to change.
Technical Support Center
1-800-522-6752
www.tycoelectronics.com

Engineering Notes

Products for Industrial & Commercial Applications

Dimensions are shown for reference purposes only.

Dimensions are in inches and millimeters unless otherwise specified. Values in brackets are metric equivalents.

Specifications subject to change.

Technical Support Center
1-800-522-6752
www.tycoelectronics.com

Table of Contents

Flexible Cable Protection System 12002

ENERFLEX Flexible Conduit Connectors.....12003

Convenience Outlets 12004
Panel Mount 12005
PC Board Mount.....12006

LGH High Voltage Connectors 12007
Lead Assemblies 12007, 12008
Receptacles 12008-12010
Commercial Single Line Connectors 12011, 12012
Two-Position Connectors, 10 KVDC 12013
7-Pin, Metal-Shell Circular, Military-Type 12014
Multi-Pin Circular Commercial Connectors, 27 KVDC 12015
Six-Pin Subminiature Commercial Plug Assembly 12016

LGH Micro-Miniature High Voltage Connectors 12017
135, 170 and 240 Series Cable Assemblies 12018
Right-Angle Plug Cable Assembly 12019
Surface Mount Receptacle 12019
1, 2 and 3 Position Cable Assemblies 12020, 12021

High Current Commercial Connector 12022-12024

AMP Power Lock Connectors 12025
Series I Connectors 12026, 12027
Series II Connectors 12028
Application Tooling.....12029

AMPINNERGY Wire-to-Board Connectors 12030-12034

AMPINNERGY Wire-to-Wire Connectors 12035-12037

Relays and Circuit Breakers 12038, 12039

Products for Industrial & Commercial Applications
Dimensions are shown for reference purposes only.
Dimensions are in inches and millimeters unless otherwise specified. Values in brackets are metric equivalents.
Specifications subject to change.
Technical Support Center
1-800-522-6752
www.tycoelectronics.com

Product Facts

- **For cables that require better protection**
- **Fittings that allow more reliable connections to be made**
- **Fittings that enhance their reliability under extreme conditions of use in the manufacture of machinery and construction**
- **High quality complete systems which combine innovative technology with rapid ex-stock availability**
- **In conformity with the latest industry standards**
- **Recognized under the Component Program of Underwriters Laboratories Inc. on applied products as marked**
- **Certified by Canadian Standards Association on applied products as marked**
- **Certified by VDE on applied products as marked**

Related Product Data

Catalog 124132
Products for Insulating and Bundling

Product Specifcations

108-1696 **Flexa***graff*

108-1696-1 **Rohr***flex*

108-1696-2 **Air***flex*

Application Specifications

114-18274 **Flexa***graff*-**AS**, **-PU-AS**, **-ME-ASF**

114-18275 **Flexa***graff*-**CU**

114-18276 **Air***flex*-**KUW-PU**

114-18277 **Rohr***flex*-**PA 6**, **Rohr***flex*-**PA 6 S**, **Rohr***flex*-**PA 12**

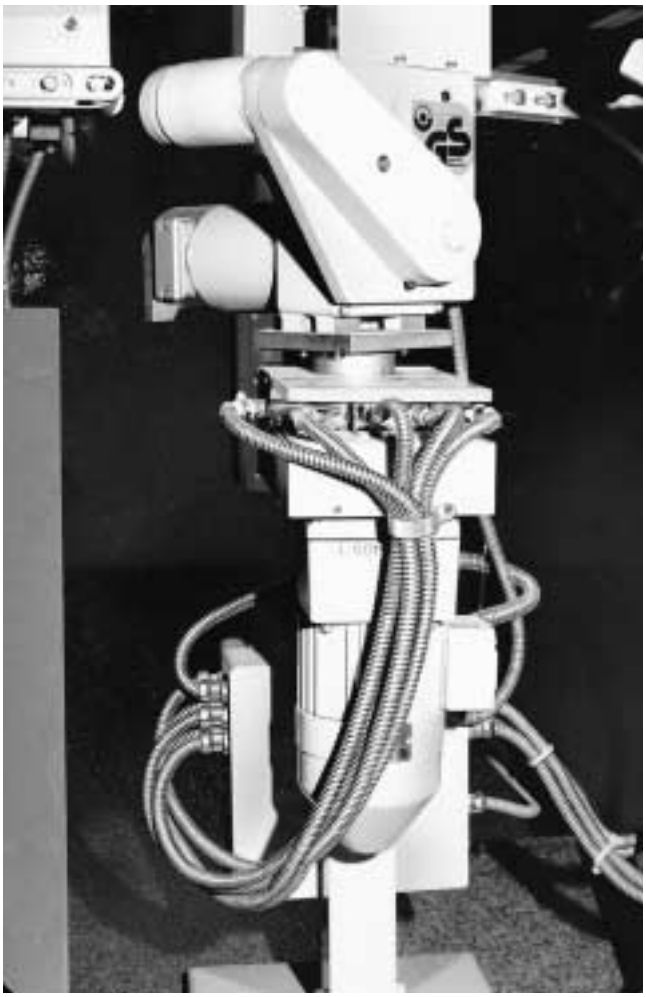



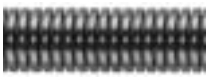









CPC/Flexa Selection Aid

CPC Shell Size	Flexa Connector Female	PA6 Flexa Tubing	Flexa Connector Male	Flexa R/A Connector Female	Flexa Counter Nut	Flat Sealing Washer
11	1-969807-2	969789-2	969803-2	969817-2	796260-2	796257-2
13	1-969809-3	969789-3	969803-3	969817-3	796260-3	796255-2
17	1-969811-4	969789-4	969803-4	969817-4	796260-5	796255-3
23	2-969813-5	969789-5	969803-5	969817-5	796260-6	796255-4

For complete product information, order Catalog 1307244

Product Facts

- **Rated 257°F [125°C] maximum**
- **Fully grounded**
- **UL Listed for use on 3/8" [9.53mm] flexible conduit, File No. E60108**
- **Recognized under the Component Program of Underwriters Laboratories, Inc. for use on 1/2" [12.70mm] flexible conduit, File No. E60108**
- **Designed to UL Performance Std. 514B**
- **Certified by Canadian Standards Association, Report Nos. LR42374-X, and LR38656-1**



Flexible Conduit Connectors are designed for connecting 3/8" [9.53mm] and 1/2" [12.70mm] trade size flexible conduit—"Greenfield" types—to electrical panels or boxes. They provide fast, reliable connectors in a variety of applications.

Connecting flexible conduit using AMP straight-thru or right-angle connectors is easy. A connector is simply screwed onto the conduit until it stops, then the connector is snapped into the knockout hole of a panel or box. No screw clamps are needed to hold the conduit in the connector, and no locknut is needed to retain the connector in the panel or box.

Straight-Thru Connectors

Description For Flexible Conduit	Part Number
.375 9.53	207370-1
.500 12.70	207373-1*

Right-Angle Connectors

Description For Flexible Conduit	Part Number
.375 9.53	207508-1
.500 12.70	207507-1*

*Not UL Listed

Product Facts

- **Panel mount connector snaps in without the use of tools and holds securely without retention hardware**
- **Terminates solid copper wire using stripless insulation displacement terminals**
- **Terminates wire end or allows wire to feed thru**
- **Alternate connection uses FASTON 205 Series tabs (see Catalog 82004)**
- **Panel mount connectors available in two sizes:**
  14-12 AWG [2-3 mm²]
  18-16 AWG [0.8-1.4 mm²]
- **Panel mount connectors available in multiple colors**
- **Printed circuit connectors feature tin-lead plated contacts, compatible with standard wave soldering processes**
- **PC board versions available in 15- or 20- amp configurations**
- **PC board versions available in choice of black or gray housings (other colors can be made available; consult Tyco Electronics)**
- **All connectors are rated for 125 VAC**
- **Recognized under the Component Program of Underwriters Laboratories Inc., File No. E146448, except for 213727-1**
- **Designed to UL Performance Std. 498**
- **Certified by Canadian Standards Association, File No. LR-7189A**
  15 A, 12-14 AWG [3-2 mm²]
  13 A, 16 AWG [1.4 mm²]
  10 A, 18 AWG [0.8 mm²]
  File No. LTR-7189A (213727-1 only)
  NRTL/C

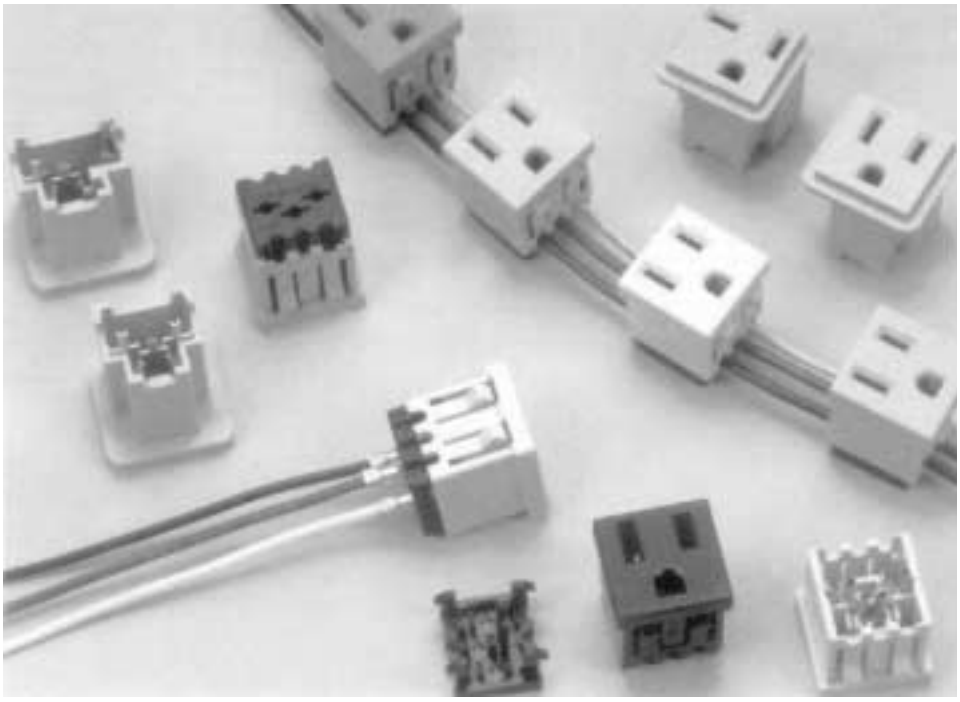

The AMP Convenience Outlet is available in two configurations, the 15 amperes, 125 VAC, panel mount version, and the printed circuit board version, offered in a choice of 15 or 20 amperes, 125 VAC.

The panel mount version is a quick, snap-in configuration that offers insulation displacement termination that eliminates the need for special termination tooling. In addition to insulation displacement application, the terminals accept FASTON 205 Series Tabs. To terminate the wires in the panel mount Convenience Outlet, simply place the wires in the proper position in the connector body, seat the connector cover and latch in place. The termination is complete with conductors fully enclosed. FASTON tab terminations are made after the cover is affixed.

Crimping barrels will extend .375 [8.89] max. outside the latched cover. Panel mount connectors are available in two wire ranges:

- 14-12 AWG [2-3 mm²] – UL and CSA rated 15 amps
- 18-16 AWG [0.8-1.4 mm²] – UL rated and CSA rated 13 amps for 16 AWG [1.4 mm²] and 10 amps for 18 AWG [0.8 mm²]

Printed circuit board connectors mount directly to the board and feature tin-lead plated solder contacts that are compatible with standard wave solder processes. Two configurations are available:

- 15 amps, 125 VAC, UL and CSA rated
- 20 amps, 125 VAC, UL and CSA rated

Convenience Outlets are designed for such uses as surge protectors, temporary power outlets, drafting table outlets, and for a wide range of computer and peripheral equipment applications.

Technical Documents:

Instruction Sheets
408-6669 – 14 -12 AWG [2-3 mm²] IDC version
408-6698 – 18-16 AWG [0.8-1.4 mm²] IDC version

For complete product information, order Catalog 82067

Panel Mount

Current Rating:

14-12 AWG — 15 A
16 AWG — 13 A
18 AWG — 10 A

Material:

Housing — Thermoplastic
Contacts — Copper alloy

No. of Contacts	Part Numbers			Housing Color
	14-12 AWG [2-3 mm²]	18-16 AWG [0.8-1.4 mm²]	Panel Plug	
2 Plus Ground	208979-2	208697-2	—	Black
	208979-4	208697-4	—	Almond
	1-208979-0	—	—	Platinum
	1-208979-1	—	—	Gray
	1-208979-2	—	—	Orange
	1-208979-4	—	—	Putty White
2 (No Ground)	213878-1	—	—	Black
0 (Blank)	—	—	796285-1	Black

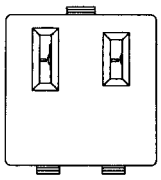

Part Number 213878-1

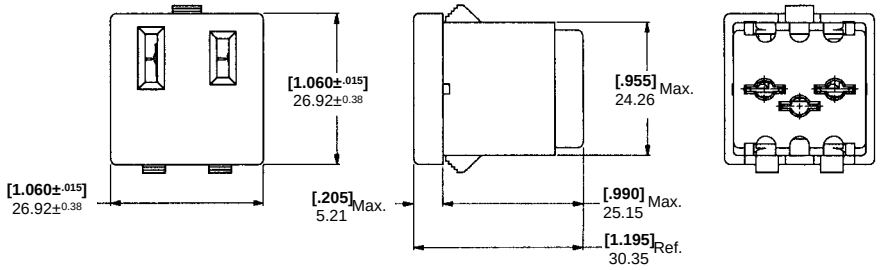

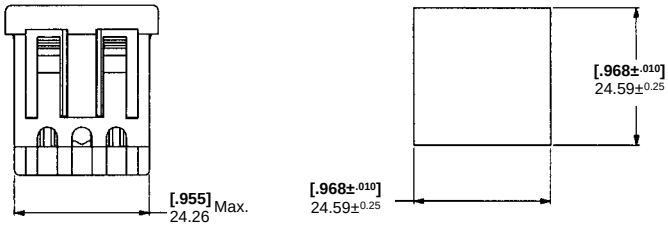

Recommended Panel Cutout
Panel Thickness — [.030-.070]0.76-1.78

205 Series FASTON Tab

Part Number 62531-1*

Specifications:

Wire Range — 18-14 AWG [0.8-2 mm²]
Insulation Diameter — .120-.150 [3.05-3.81]

Material and Finish:

Brass, tin plated

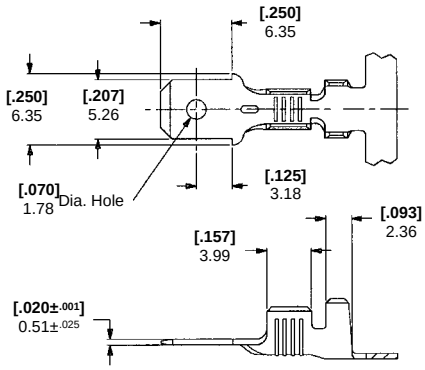

*Reverse reeled for use in Model "K" Terminating Machine
Part Number 565435-5 using Heavy Duty Miniature (HDM) Applicator
Part Number 567069-2 or in Leadmakers using HDM Applicator
Part Number 567069-1.

PC Board-Mount

15 Amperes
Part Number 213598-2

Material and Finish:

Housing — Nylon, Black

Contacts — Brass plated .0001000 [0.00254] min. tin-lead for a minimum length of .195 [4.95] on end opposite mating face, over .000050 [0.00127] min. nickel on entire contact

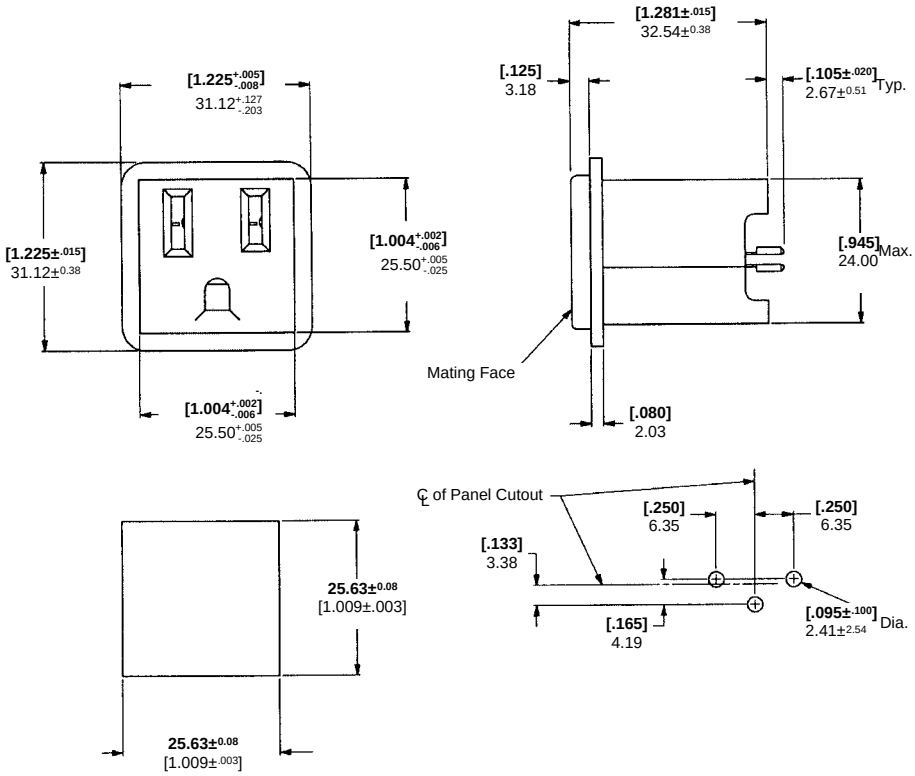

Recommended Panel Cutout **Recommended Hole Pattern**

20 Amperes
Part Number 213727-1

Material and Finish:

Housing — Nylon, Gray

Contacts — Brass plated .0001000 [0.00254] min. tin-lead for a minimum length of .195 [4.95] on end opposite mating face, over .000050 [0.00127] min. nickel on entire contact

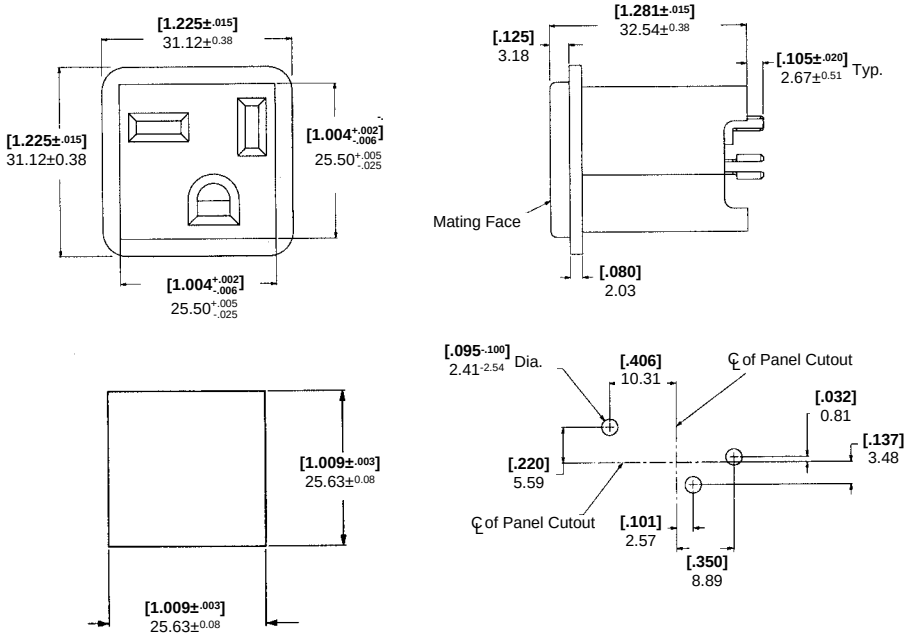

Recommended Panel Cutout **Recommended Hole Pattern**

For complete product information, order Catalog 82067

Products for Industrial & Commercial Applications
Dimensions are shown for reference purposes only.
Dimensions are in inches and millimeters unless otherwise specified. Values in brackets are metric equivalents.
Specifications subject to change.
Technical Support Center
1-800-522-6752
www.tycoelectronics.com

Assemblies

Material and Finish:

Lead Insulation — Silicone rubber, durometer reading 60 to 70, white

Conductors — Per MIL-W-16878: LGH 1/2, LGH 1/2L, LGH 1 and LGH 1L lead assemblies contain 41 strands minimum of 32 AWG [0.03 mm^2] wire, silver plated to compose a 16 AWG [1.25 mm^2] stranded conductor .06 nom. O.D. [1.5]; LGH 4 lead assemblies contain 19 strands minimum of 29 AWG [0.07 mm^2] wire, silver plated to compose a 16 AWG [1.25 mm^2] stranded conductor .06 nom. O.D. [1.5]. Silver plating is per ASTM-B298-58T.

Pigtail — Solder dipped

Socket — Bronze per ASTM-140, alloy B, gold plated per MIL-G-45204, Type II. (.000030 [0.00076] gold over .000030 [0.00076] nickel per QQ-N-290). Socket is crimped to lead wire.

Cap Materials — Type A polycarbonate per LP393; Type B glass-filled polyester per MIL-M-24519; Type C molded glass epoxy per MIL-M-24325 (ships) GEI-5.

Molded End — Silicone rubber per ZZ-R-765, Class IIa and IIb, grade 60.

Positive Stop Ferrule — Glass-filled polyester per MIL-M-24519.

Washer — TFE, electrical grade per MIL-P-19468

Marking — Per MIL-STD-130

Voltage Ratings (10 A load)

The voltage ratings tabulated here and noted elsewhere apply to LGH molded-end lead assemblies properly mated with appropriate LGH receptacles, which are properly potted or otherwise protected on the back end.

LGH Lead Assemblies are manufactured with a silicone rubber end having a specified mating length (see table below) molded onto a 16 AWG white silicone rubber wire. These assemblies provide extreme reliability and safety for high voltage applications in severe environments



Single End Lead Assembly



Single End Lead Assembly with Positive Stop Ferrule

LGH leads and receptacles find wide application where high voltage is used in hostile environments. LGH leads and receptacles are lightweight, miniature, extremely reliable and they maintain peak performance under high temperature, high altitude applications. They are equally applicable to low temperature, low altitude devices. **For custom-made assemblies, contact Tyco Electronics.**

LGH Series	Mating Length/Depth in.	Mating Length/Depth mm	Normal Capacitance pF/ft.	Normal Capacitance pF/m	Operating Voltage* Kilovolts DC	3 Min. Hipot** Kilovolts DC
LGH ¼	**.25**	[6.35]	—	—	5	7.5
LGH ½	**.53**	[13.46]	55	180	10	15
LGH ½L	**.89**	[22.61]	55	180	15	23
LGH 1	**.88**	[22.35]	35	115	20	30
LGH 1L	**1.69**	[42.93]	35	115	25	38
LGH 2	**1.44**	[36.58]	28	144	30	45
LGH 3	**1.81**	[45.97]	35	115	40	55
LGH 4	**2.00**	[50.80]	28	144	50	60

*Sea level to 70,000 ft. [21,336 m], -55°C to +125°C [-67°F to +257°F].
**Sea level at 25°C (77°F).

Products for Industrial & Commercial Applications
Dimensions are shown for reference purposes only.
Dimensions are in inches and millimeters unless otherwise specified. Values in brackets are metric equivalents.
Specifications subject to change.
Technical Support Center
1-800-522-6752
www.tycoelectronics.com

Lead Assemblies and Receptacles

Lead Assemblies, 10 KVDC, LGH 1/2 — Single End

Length 24 in. [609.6 mm]
Part Number 830611-1

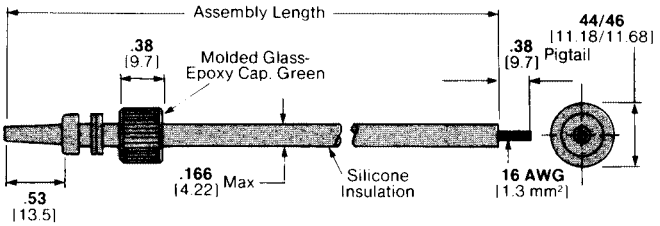

Lead Assemblies, 10 KVDC, LGH 1/2 — Single End with Positive Stop Ferrules

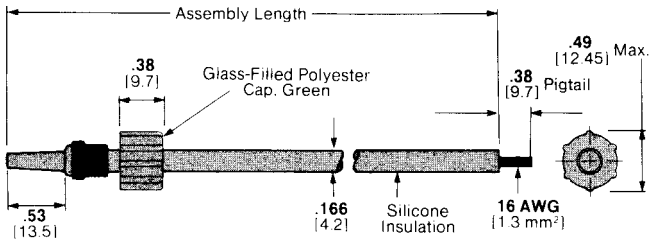

Assembly Length	Part Numbers
6 152.4	862545-1
18 457.2	862545-6

LGH Receptacles are manufactured in molded glass epoxy having a specified mating depth (see page 12007). When used with LGH lead assemblies they offer the ultimate in dependability, even under most hostile environmental conditions.



Glass-epoxy receptacle for encapsulated units



Glass-epoxy, flanged receptacle for bulkhead applications



Hermetically sealed, glass-epoxy receptacle for canned units

Receptacles, 10 KVDC, LGH 1/2, Glass Epoxy with .53 [13.46] Barrel Depth — Flanged for Hermetic Seal

Part Number 861252-1

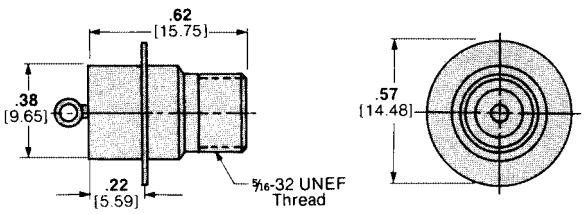

For use with RFI shielded leads.

Receptacles, 10 KVDC, LGH 1/2, Glass Epoxy with .53 [13.46] Barrel Depth — For Encapsulated Units

Part Number 830178-1

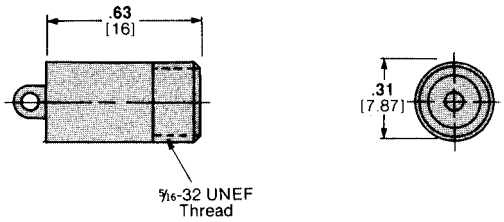

Products for Industrial & Commercial Applications
Dimensions are shown for reference purposes only.
Dimensions are in inches and millimeters unless otherwise specified. Values in brackets are metric equivalents.
Specifications subject to change.
Technical Support Center
1-800-522-6752
www.tycoelectronics.com

Receptacles

Receptacles, 10 KVDC, LGH 1/2, Glass Epoxy with .53 [13.46] Barrel Depth — Flanged Bolt Mount

Part Number 830395-1

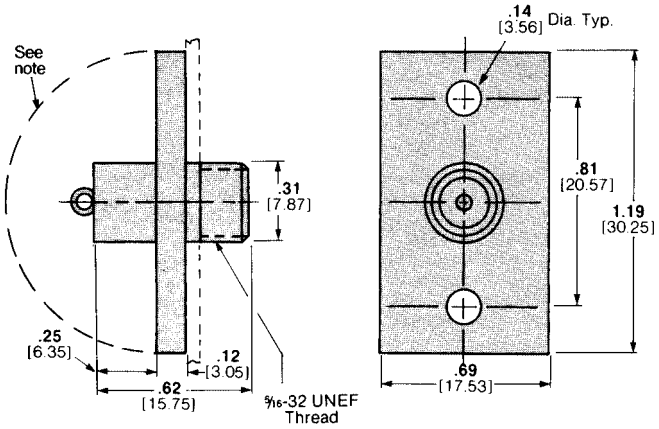

If the panel or mounting hardware is at ground potential, guard against arc-over and breakdown within the area defined by this line,

Receptacles, 15 KVDC, LGH 1/2L, Glass Epoxy with .89 [22.61] Barrel Depth — Flanged for Hermetic Seal

Part Number 861253-1

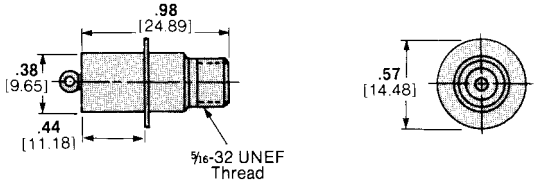

For use with RFI shielded leads.

Receptacles, 15 KVDC, LGH 1/2L, Glass Epoxy with .89 [22.61] Barrel Depth — For Encapsulated Units

Part Number 858855-1

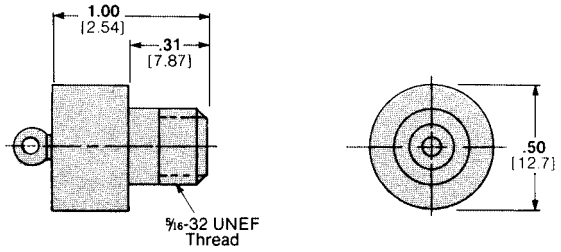

Receptacles, 15 KVDC, LGH 1/2L, Glass Epoxy with .89 [22.61] Barrel Depth — Bolt Mount

Part Number 858857-1

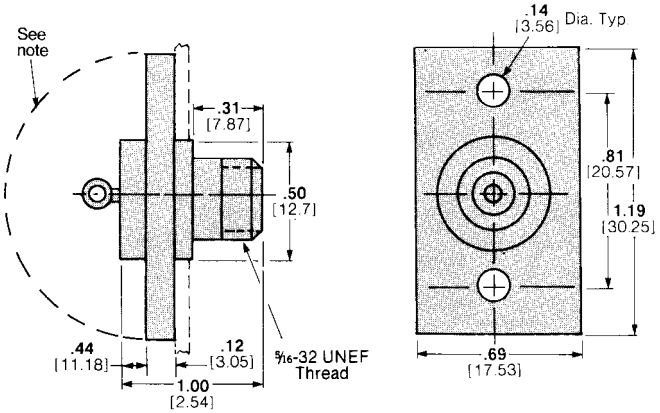

If the panel or mounting hardware is at ground potential, guard against arc-over and breakdown within the area defined by this line,

Products for Industrial & Commercial Applications
Dimensions are shown for reference purposes only.
Dimensions are in inches and millimeters unless otherwise specified. Values in brackets are metric equivalents.
Specifications subject to change.
Technical Support Center
1-800-522-6752
www.tycoelectronics.com

Receptacles

Receptacles, 20 KVDC, LGH 1, Glass Epoxy with .88 [22.35] Barrel Depth — Flanged Bolt Mount

Part Number 858827-1

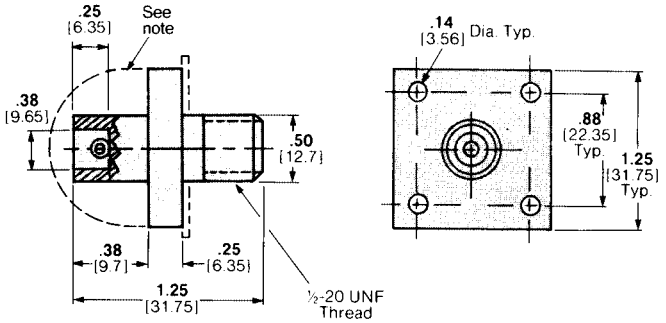

If the panel or mounting hardware is at ground potential, guard against arc-over and breakdown within the area defined by this line,

Receptacles, 20 KVDC, LGH 1, Glass Epoxy with .88 [22.35] Barrel Depth — For Encapsulated Units

Part Number 834333-2

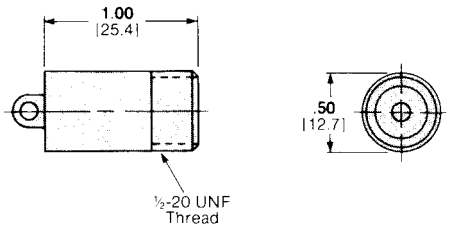

Receptacles, 25 KVDC, LGH 1L, Glass Epoxy with 1.69 [42.93] Barrel Depth — Flanged for Hermetic Seal

Part Number 861255-1

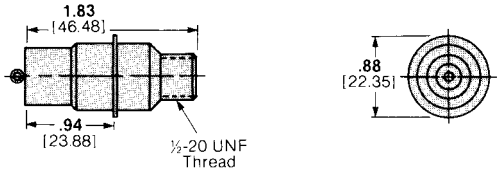

For use with RFI shielded leads.

Receptacles, 25 KVDC, LGH 1L, Glass Epoxy with 1.69 [42.93] Barrel Depth — For Encapsulated Units

Part Number 858868-1

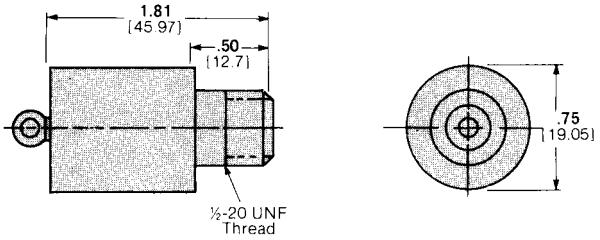

If the panel or mounting hardware is at ground potential, guard against arc-over and breakdown within the area defined by this line,

Receptacles, 50 KVDC, LGH 4, Glass Epoxy with 2.00 [50.8] Barrel Depth — For Encapsulated Units

Part Number 836567-1

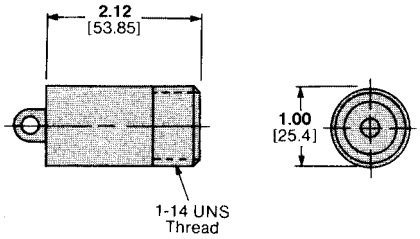

Products for Industrial & Commercial Applications
Dimensions are shown for reference purposes only.
Dimensions are in inches and millimeters unless otherwise specified. Values in brackets are metric equivalents.
Specifications subject to change.
Technical Support Center
1-800-522-6752
www.tycoelectronics.com

Commercial Single Line Connectors

Product Facts

- All parts made of UL Recognized, 94V-0 rated, plastic material
- Designed to exceed minimum creepage and clearance for specified voltages per applicable international specifications
- Available with or without leads
- Maximum flexibility of application through elimination of predetermined lead lengths
- Machine applied terminations provide for lowest applied cost



10 KVDC Connectors

Voltage: 10 KVDC

Current: 5 amperes, continuous, rms

20 KVDC Connectors

Voltage: 8 KVAC, rms, 60 Hz; 20 KVDC

Current: 7.5 amperes, continuous, rms

30 KVDC Connectors

Voltage: 12 KVAC, rms, 60 Hz;
30 KVDC

Current: 25 amperes, continuous, rms

Commercial Single Line, 10 KVDC Connectors — Plug Kit 20-24 AWG [0.2-0.6 mm²] for .105 [2.66] Max. Insulation Diameter

Part Number 867157-2

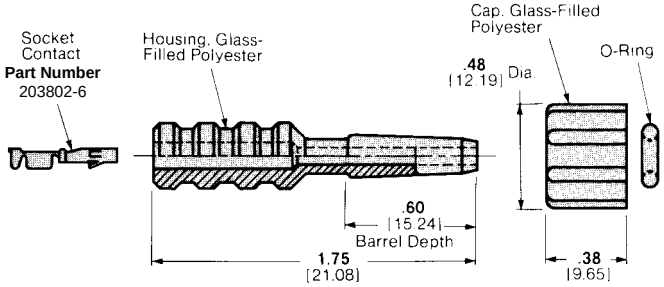

Commercial Single Line, 10 KVDC Connectors — Receptacle Kit 20-24 AWG [0.2-0.6 mm²] for .160 [4.06] Max. Insulation Diameter

Part Number 867156-1

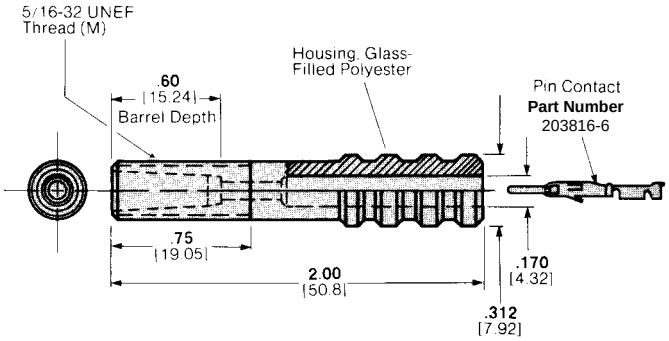

Products for Industrial & Commercial Applications

Dimensions are shown for reference purposes only.

Dimensions are in inches and millimeters unless otherwise specified. Values in brackets are metric equivalents.

Specifications subject to change.

Technical Support Center
1-800-522-6752
www.tycoelectronics.com

Commercial Single Line Connectors

Commercial Single Line, 20 KVDC Connectors — Plug Kit

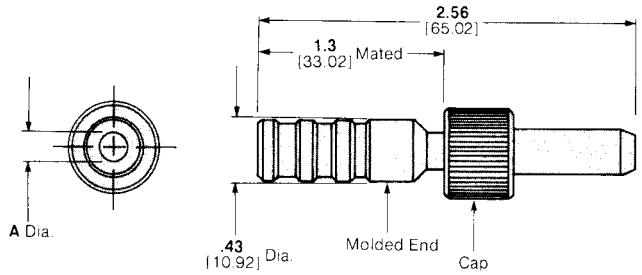

Dimension A	Wire Size AWG	Wire Size mm²	Contact Part Number	Plug Kit Part Numbers
.185 4.7	18-16	0.8-1.4	66101-2	861610-3
.302 7.67	18-16	0.8-1.4	—	861610-2

Commercial Single Line, 20 KVDC Connectors — Bulkhead-Mounted Receptacle Kit

Part Number 861611-1

If the bulkhead and mounting hardware are metal at ground potential, the back end of the receptacle must be protected against arc-over and breakdown.

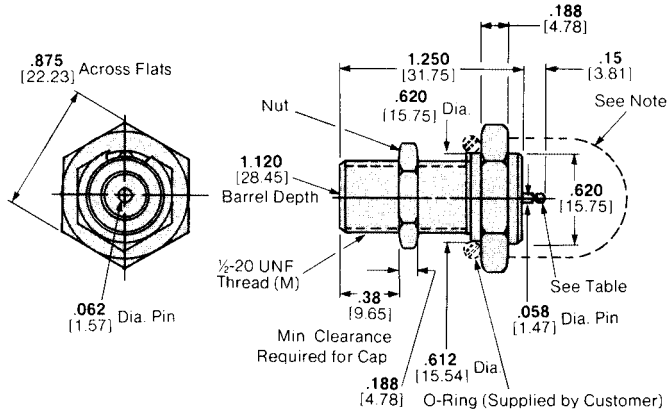

Commercial Single Line, 20 KVDC Connectors — Receptacle Kit 18-16 AWG [0.8-1.4 mm²] for .302 [7.67] Max. Insulation Diameter

Part Number 862197-2

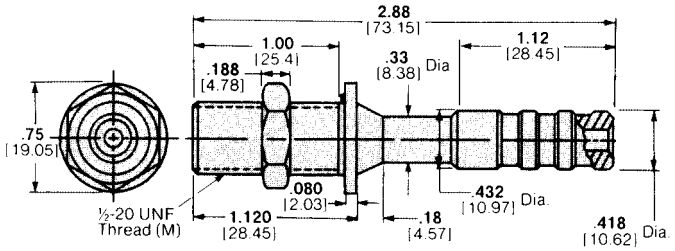

Products for Industrial & Commercial Applications
Dimensions are shown for reference purposes only.
Dimensions are in inches and millimeters unless otherwise specified. Values in brackets are metric equivalents.
Specifications subject to change.
Technical Support Center
1-800-522-6752
www.tycoelectronics.com

Two-Position Connectors, 10 KVDC

Product Facts

- UL Recognized 94V-0 rated glass-filled polyester housing
- Standard housing color is black—other colors available
- Operates up to 10 KVDC
- Will withstand a 15 KVDC hipot 3-minute test
- Safe handling of high voltage—deeply recessed contacts and staggered pins
- Lightweight, compact design
- Preassembled connectors furnished with attached leads of virtually any color/length combination
- Connector kits for shielded and unshielded applications include plug, receptacle and contacts
- Crimp, snap-in contacts; pin diameter .062 [1.57]
- Snap-in panel mount receptacle housings—no mounting hardware required
- Temperature range: -15°C to +85°C [5°F to 190°F]

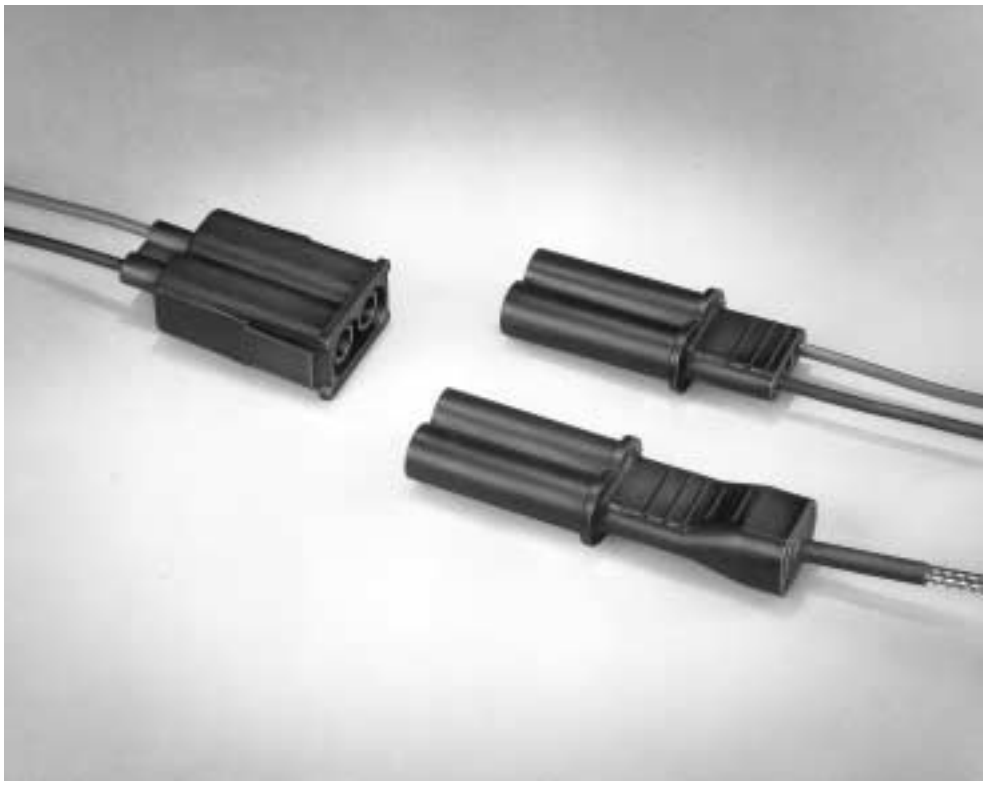

Two-Position, 10 KVDC Connector — Plug Kit 18-16 AWG [0.8-1.4 mm²] for .090 [2.29] Bulkhead Thickness

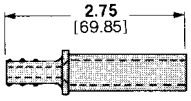

Part Number 862383-2
(Unshielded)

Products for Industrial & Commercial Applications
Dimensions are shown for reference purposes only.
Dimensions are in inches and millimeters unless otherwise specified. Values in brackets are metric equivalents.
Specifications subject to change.
Technical Support Center
1-800-522-6752
www.tycoelectronics.com

7-Pin, Metal-Shell Circular Connector, Military-Type

Product Facts

- 15 KVDC operating voltage, up to 70,000 feet [21,336 m]
- Current carrying capacity—7.5 A continuous per line for 20 AWG wire
- Metal shell available for complete shielding and rugged operation
- Molded-in Size 20 contacts are fully shrouded
- Molded glass epoxy and silicone rubber interface for positive sealing
- Polarized plug and receptacle housings help prevent mismating
- Designed to meet applicable specifications
- Hermetically sealed receptacles available
- Operating temperature range from -55°C to +125°C [-67°F to +257°F]
- Moisture resistant
- Corona resistant



Material and Finish:

Interface — Glass epoxy and silicone rubber

Contacts — Size 20, gold plated

Plug Kit, Straight Boot

Part Number 865656-1

Receptacle, Non-Hermetic

Part Number 862004-1

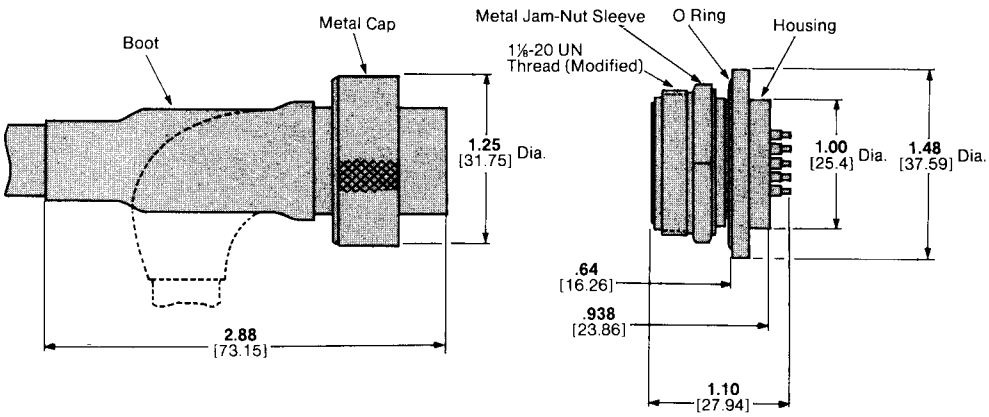

Products for Industrial & Commercial Applications

Dimensions are shown for reference purposes only.

Dimensions are in inches and millimeters unless otherwise specified. Values in brackets are metric equivalents.

Specifications subject to change.

Technical Support Center
1-800-522-6752
www.tycoelectronics.com

Multi-Pin Circular Commercial Connectors, 27 KVDC

Product Facts

- **Housing made of UL Recognized, 94V-0 rated, self-extinguishing polyester materials**
- **Standard housing color is black—other colors available**
- **Operating and storage temperature range: -55°C to +125°C [-67°F to +257°F]**
- **Operates up to 27 KVDC**
- **Will withstand a 35 KVDC hipot test**
- **Safe handling of high-voltage—no exposed contacts**
- **Lightweight, compact design**
- **Threaded coupling provides positive, quick connect/ disconnect**
- **Resilient silicone rubber "O" rings provide positive sealing for mated connectors**
- **Can be panel or bulkhead mounted or used in free-hanging applications**
- **Size 16 gold-plated contacts with 13 ampere rating accommodate wide range of wire sizes—24-20 AWG and 18-16-14 AWG—may be hand tool or machine crimped or soldered**
- **Two shell sizes available: smaller size offers 2-, 3- and 4-contact configurations; larger diameter shell contains 6 or 7 contacts**



Number of Contacts	Wire Range		Part Numbers		
	AWG	mm²	Receptacle Kit	Plug Kit with Strain Relief	Plug with Strain Relief & Receptacle Kit
4	24-20	0.2-0.6	859526-4	863022-1	—
	18-16	0.8-1.4	859526-5	—	—
7	24-20	0.2-0.6	861647-7	863024-1	863019-1
	18-16	0.8-1.4	861647-8	863024-2	—

Material and Finish:

Housing, Cap, Nut & Strain Relief — Glass reinforced polyester

O-ring — Silicone rubber

Contacts — AMP Type II, gold plated per MIL-G-45204

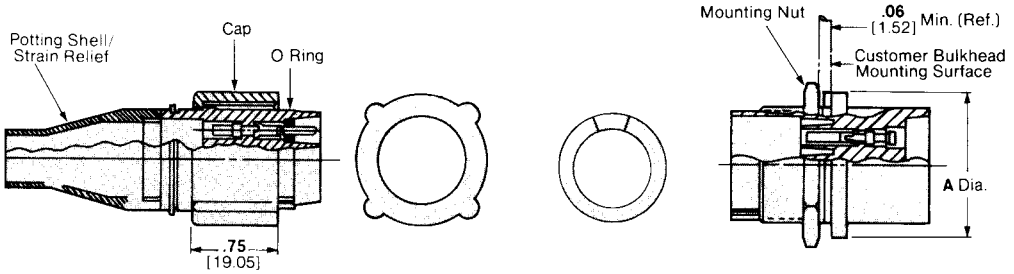

Hand Tools

24-20 AWG [0.2-0.6 mm²]—
Part Number 58305-1

18-16 AWG [0.8-1.4 mm²]—
Part Number 45098

14 AWG [2 mm²]—
Part Number 45098

Extraction Tool

Part Number 861751-1

Products for Industrial & Commercial Applications
Dimensions are shown for reference purposes only.
Dimensions are in inches and millimeters unless otherwise specified. Values in brackets are metric equivalents.
Specifications subject to change.
Technical Support Center
1-800-522-6752
www.tycoelectronics.com

6-Position Subminiature Commercial Receptacle Assembly

Product Facts

- **Extremely lightweight—total weight of mated pair is less than 14 grams**
- **Compact design—requires less than .6 square inch [387 mm²] of mounting surface; occupies less than .750 cubic inch [.229 mm³] of volume per mated pair**
- **Resilient silicone rubber insert in plug half provides positive interfacial seal for mated connector**
- **Withstands 10 KVDC hipot test**
- **Housing styles for potting, chassis slot (channel) mounting, panel mounting and free-hanging applications**
- **Size 22, gold plated socket contacts with 5 ampere rating on 22 AWG [0.4 mm²] silicone insulated wire leads**

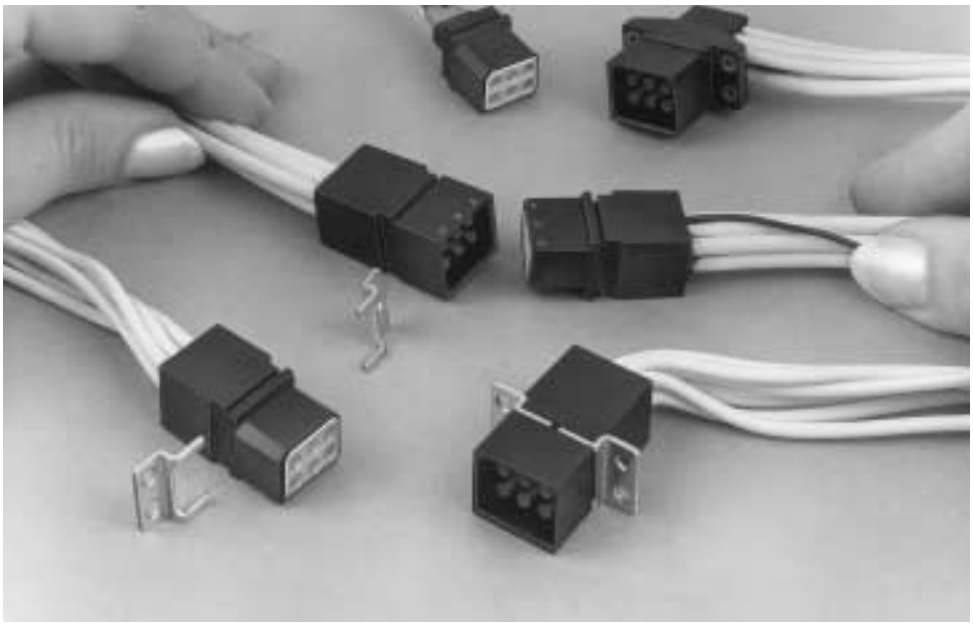

Material and Finish

Housing and Potting Shells— Glass-filled thermoplastic polyester, flame retardant, black

Mounting Brackets — Carbon steel, nickel plated

Contacts — Beryllium copper, plated .000030 [0.00076] min. gold per MIL-G-45204 over .000030 [0.00076] min. nickel per QQ-N-290

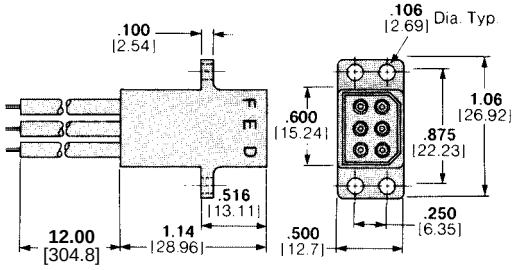

Part Number 867473-1

Products for Industrial & Commercial Applications

Dimensions are shown for reference purposes only.

Dimensions are in inches and millimeters unless otherwise specified. Values in brackets are metric equivalents.

Specifications subject to change.

Technical Support Center
1-800-522-6752
www.tycoelectronics.com

Product Facts

- **A series of miniature high voltage connectors for applications where space is limited**
- **HV Performance in a small lightweight connector**
- **Operating Voltages up to 12 KVDC**
- **Operation to 100,000 ft. altitude**
- **Lead wire remains flexible to -55°C**
- **Color coded for easy identification**

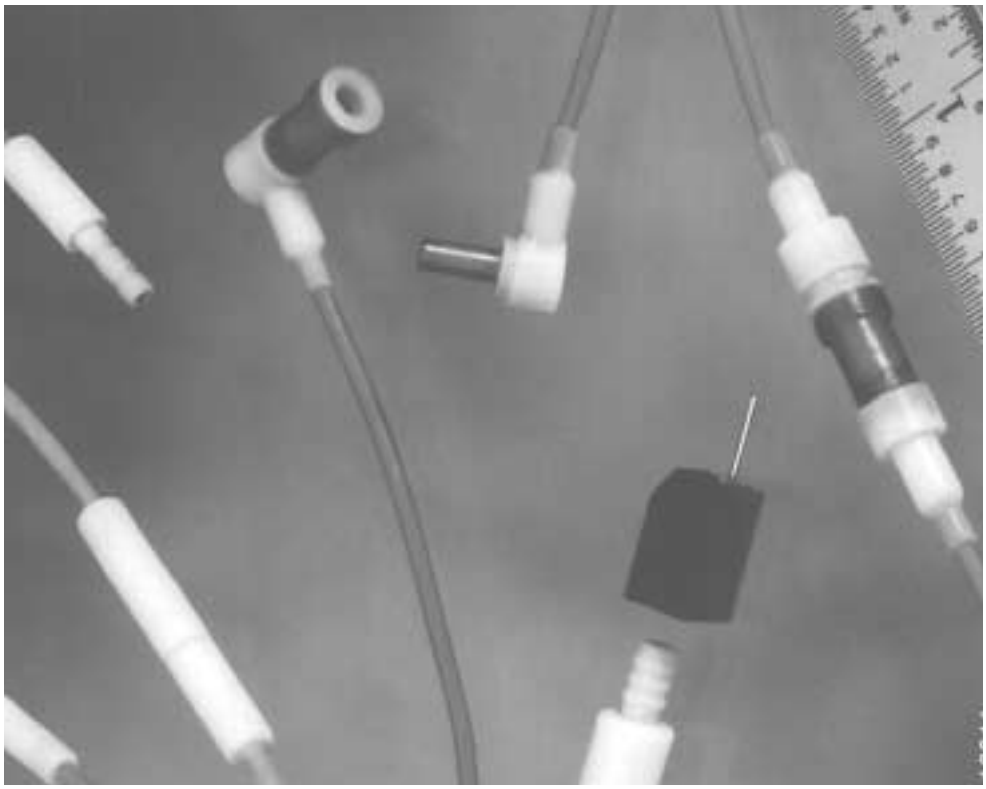

Technical Documents:

Product Specification
135 Series (.135 Dia.)
108-1788
170 Series (.179 Dia.)
108-1802
240 Series (.240 Dia.)
108-1853
Surface Mount/Plug Assembly
108-1880
1, 2, and 3 Position
108-1812

LGH Micro-Miniature connectors and cable assemblies are designed to transmit high voltages in limited-space applications. In addition, these lightweight products are designed to operate at altitudes of up to 100,000 feet.

Applications for LGH Micro-Miniature connectors and cable assemblies include small high-voltage power supplies, back lighting for LCD flat panel displays, flat panel FED (field emissive displays), small CRT's (cathode ray tubes), and commercial and military avionics.

Cable assemblies are manufactured from silicon coated FEP or corona-resistant Teflon. The ends are molded from silicon rubber. Durable, gold-plated, screw-machined, size 22 (.030) pin and socket contacts ensure a reliable connection interface. Push-pull couplings provide quick connect/disconnect mating.

Series 135 cable assemblies are designed to operate at voltages up to 6 KVDC at altitudes up to 10,000 feet. Maximum voltages of 6 KVDC and 12 KVDC can be attained by Series 170 and Series 240 cable assemblies, respectively. Two- and three-position assemblies are available for multi-wire interconnections. Wire-to-board connections are accomplished through a pcb surface mount (SMT) receptacle and right-angle plug cable assembly.

Series/Type	Operating Voltage, Kilovolts DC	Test Voltage
135 Series	6	10 KVDC at 10,000 ft. and –25°C and at +85°C
170 Series	6	10 KVDC at 100,000 ft. and –55°C to +125°C
240 Series	12	18 KVDC at Sea Level 70,000 ft. and –55°C to +125°C
Surface Mount Receptacle/Right-Angle Cable Plug Assembly	7	13 KVDC at 20,000 ft. and –25°C to +75°C and 3 KVDC at 70,000 ft. at –55°C and +125°C
1, 2, 3 Position Assemblies	7.5	12 KVDC at 10,000 ft. and –15°C to +85°C

Products for Industrial & Commercial Applications

Dimensions are shown for reference purposes only.

Dimensions are in inches and millimeters unless otherwise specified. Values in brackets are metric equivalents.

Specifications subject to change.

Technical Support Center
1-800-522-6752
www.tycoelectronics.com

135 Series Cable Assemblies

Material and Finish:

Conductors—24 AWG (19/36); copper; silver plated

Lead Insulation–Teflon (FEP); silicone coated; red

Molded End—Silicone rubber

Pin Contact— Size 22; bronze; plated .000030 [0.00076] min. gold with entire contact underplated .000050 [0.00127] min. nickel

Socket Contact—Size 22; copper alloy; plated .000050 [0.00127] min. gold with entire contact underplated .000050 [0.00127] min. nickel; stainless steel sleeve

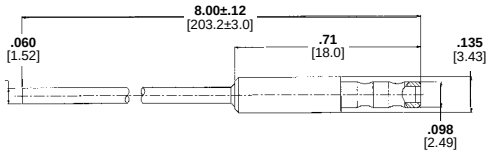

Plug Assembly 443957-1

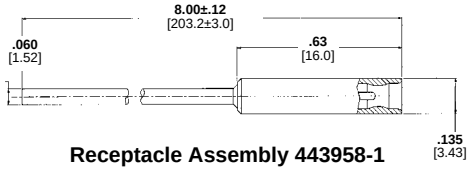

Receptacle Assembly 443958-1

170 Series Cable Assemblies

Material and Finish:

Conductors—24 AWG (19/36); copper; silver plated

Lead Insulation–Teflon (FEP); silicone coated; red, or corona-resistant Teflon; yellow

Molded End—Silicone rubber

Pin Contact — Size 22; bronze; plated .000030 [0.00076] min. gold with entire contact underplated .000050 [0.00127] min. nickel

Socket Contact —Size 22; copper alloy; plated .000050 [0.00127] min. gold with entire contact underplated .000050 [0.00127] min. nickel; stainless steel sleeve

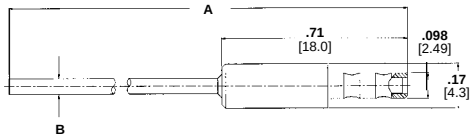

Plug

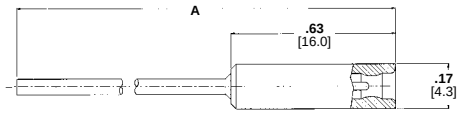

Receptacle

Dimensions		Lead Insulation Type	Part Numbers	
A	B		Plug	Receptacle
12.00 ± .12 304.8 ± 3.0	**.060** 1.52	Silicone Coated Teflon	—	1218148-1
12.50 ± .12 317.5 ± 3.0	**.060** 1.52	Silicone Coated Teflon	1218147-1	—
18.50 ± .12 469.9 ± 3.0	**.065** 1.65	Corona Resistant Teflon	1218149-1	1218150-1
48.00 ± .48 1219.2 ± 12.2	**.060** 1.52	Silicone Coated Teflon	—	1218148-2

240 Series Cable Assemblies

Material and Finish:

Conductors—24 AWG (19/36); copper; silver plated

Lead Insulation–Teflon (FEP); silicone coated; red

Molded End—Silicone rubber

Plug & Receptacle Housings— Glass filled polyetherimide resin

Pin Contact — Size 22; brass; plated .000050 [0.00127] min. gold with entire contact underplated .000050 [0.00127] min. nickel

Socket Contact —Size 22; copper alloy; plated .000050 [0.00127] min. gold with entire contact underplated .000050 [0.00127] min. nickel; stainless steel sleeve

Pigtail—Solder dipped

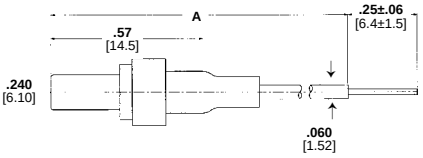

Plug

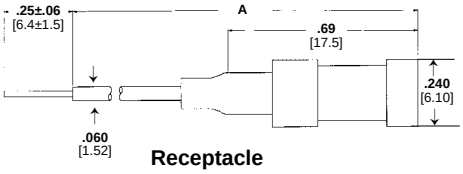

Receptacle

Dimension	Part Numbers	
A	Plug	Receptacle
7.00 ± .25 177.8 ± 6.4	448660-1	—
72.00 ± 1.00 1828.8 ± 25.4	448460-2	448658-1

Products for Industrial & Commercial Applications

Dimensions are shown for reference purposes only.

Dimensions are in inches and millimeters unless otherwise specified. Values in brackets are metric equivalents.

Specifications subject to change.

Technical Support Center
1-800-522-6752
www.tycoelectronics.com

Right-Angle Plug Cable Assembly

Material and Finish:

Right-Angle Plug Cable Assembly:

Conductors—22 AWG (19/34); copper; silver plated

Lead Insulation–Silicone

Molded End—Silicone rubber

Socket Contact —Size 22; leaded copper; plated .000050 [0.00127] min. gold with entire contact underplated .000050 [0.00127] min. nickel; stainless steel sleeve

Surface Mount Receptacle:

Housing–Glass filled epoxy; black, or polyphenylene sulfide (PPS); brown

Pin Contact —Size 22; brass; plated .000100 [.00254] min. tin/lead with entire contact underplated .000050 [.00127] min. nickel

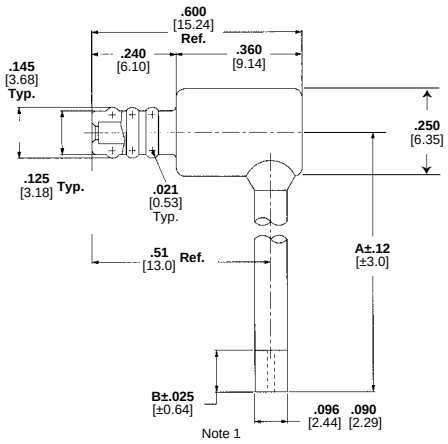

A Dim.	B Dim.	Part Numbers
4.00 101.6	—	1218134-4
6.63 168.4	**.250** 6.35	1218134-2
8.00 203.2	—	1218134-3
10.00 254.0	—	1218134-1

Note: 1. Insulation cut but not removed.

Surface Mount Receptacle

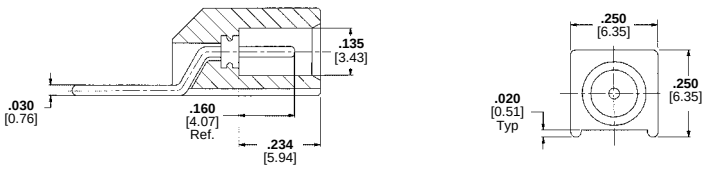

Housing Material	Part Numbers
Black glass filled epoxy	1218055-1
Brown polyphenylene sulfide (PPS)	1218055-2

Products for Industrial & Commercial Applications
Dimensions are shown for reference purposes only.
Dimensions are in inches and millimeters unless otherwise specified. Values in brackets are metric equivalents.
Specifications subject to change.
Technical Support Center
1-800-522-6752
www.tycoelectronics.com

1, 2 and 3 Position Cable Assemblies

Material and Finish:

Conductors—22 AWG (19/34); copper; silver plated

Lead Insulation–Silicone

Housing—Silicone rubber

Pin Contact — Size 22; bronze; plated .000030 [0.00076] min. gold with entire contact underplated .000050 [0.00127] min. nickel

Socket Contact —Size 22; copper alloy; plated .000050 [0.00127] min. gold with entire contact underplated .000050 [0.00127] min. nickel; stainless steel sleeve

1-Position Cable Assembly

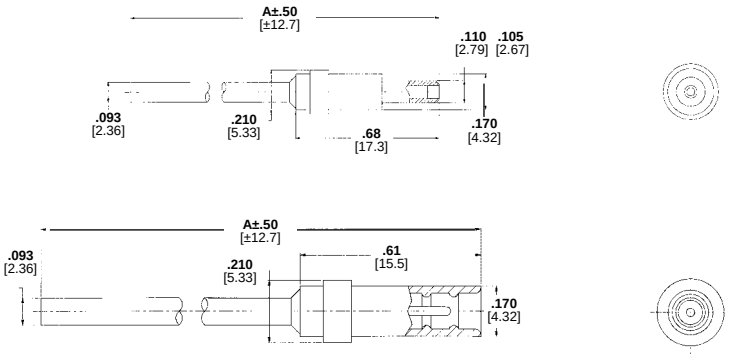

Dim. A	Wire Color	Plug Assembly	Receptacle Assembly
6.00 152.4	White	867823-5	867824-3
24.00 609.6	White	—	867824-1
24.00 609.6	Green	—	867824-2
15.00 381.0	White	867823-1	—
30.00 762.0	White	867823-2	—
36.00 914.4	Green	867823-3	—
36.00 914.4	White	867823-4	—

2-Position Cable Assembly

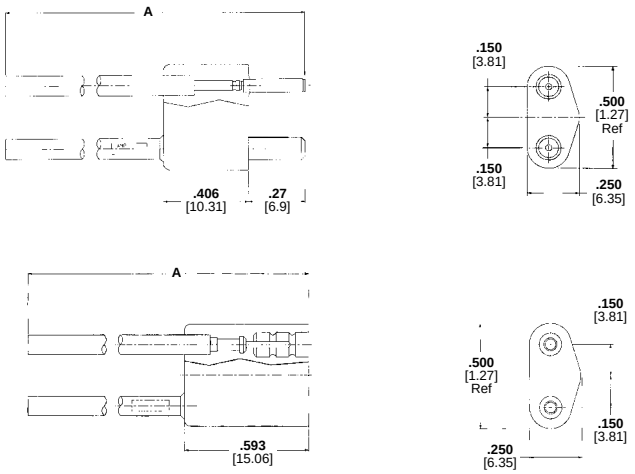

Dim. A	Wire Color	Plug Assembly	Receptacle Assembly
12.00 304.8	Brown	866559-1	866196-1
16.00 406.4	Brown	866559-5	866196-5
18.00 457.2	Brown	866559-2	866196-2
24.00 609.6	Brown	866559-3	866196-3
48.00 1219.2	Brown	866559-4	866196-4

Products for Industrial & Commercial Applications

Dimensions are shown for reference purposes only.

Dimensions are in inches and millimeters unless otherwise specified. Values in brackets are metric equivalents.

Specifications subject to change.

Technical Support Center
1-800-522-6752
www.tycoelectronics.com

1, 2 and 3 Position Cable Assemblies

3-Position Cable Assembly

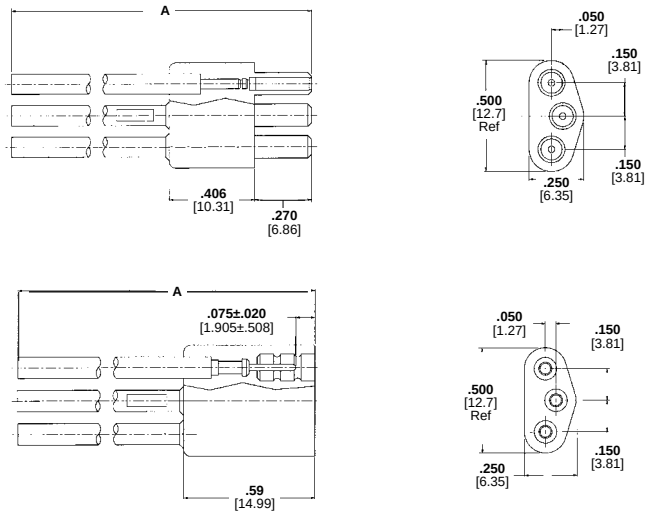

Dim. A	Wire Color	Plug Assembly	Receptacle Assembly
12.00 304.8	Lead 1 – Green Lead 2 – Yellow Lead 3 - Blue	862424-1	862425-1
18.00 457.2	Lead 1 – Green Lead 2 – Yellow Lead 3 – Blue	862424-2	862425-2
24.00 609.6	Lead 1 – Green Lead 2 – Yellow Lead 3 – Blue	—	862425-3
48.00 1219.2	Lead 1 – Green Lead 2 – Yellow Lead 3 - Blue	862424-4	862425-4
12.00 304.8	Brown	863743-1	—
16.00 406.4	Brown	863743-2	—

Products for Industrial & Commercial Applications
Dimensions are shown for reference purposes only.
Dimensions are in inches and millimeters unless otherwise specified. Values in brackets are metric equivalents.
Specifications subject to change.
Technical Support Center
1-800-522-6752
www.tycoelectronics.com

Product Facts

- **Current Ratings:**
  8 AWG [8 mm²]
  35 amperes
  10 AWG [6 mm²]
  30 amperes
  12 AWG [3 mm²]
  23 amperes
  30°C T-Rise – 4 circuit housing fully loaded; single circuit energized
- **Designed to meet the following UL requirements:**
  - **Housing rating for 600 VAC**
  - **+ 105°C material**
- **Positive locking housings**
- **Housings used in free-hanging or panel mounted applications**
- **Hermaphroditic contacts used in both plug and cap halves – inventories minimized**
- **Contacts can be terminated by automatic machine for lowest applied cost**
- **Recognized under the Component Program of Underwriters Laboratories Inc., File No. E28476**
- **Certified by Canadian Standards Association, File No. LR 7189-115**

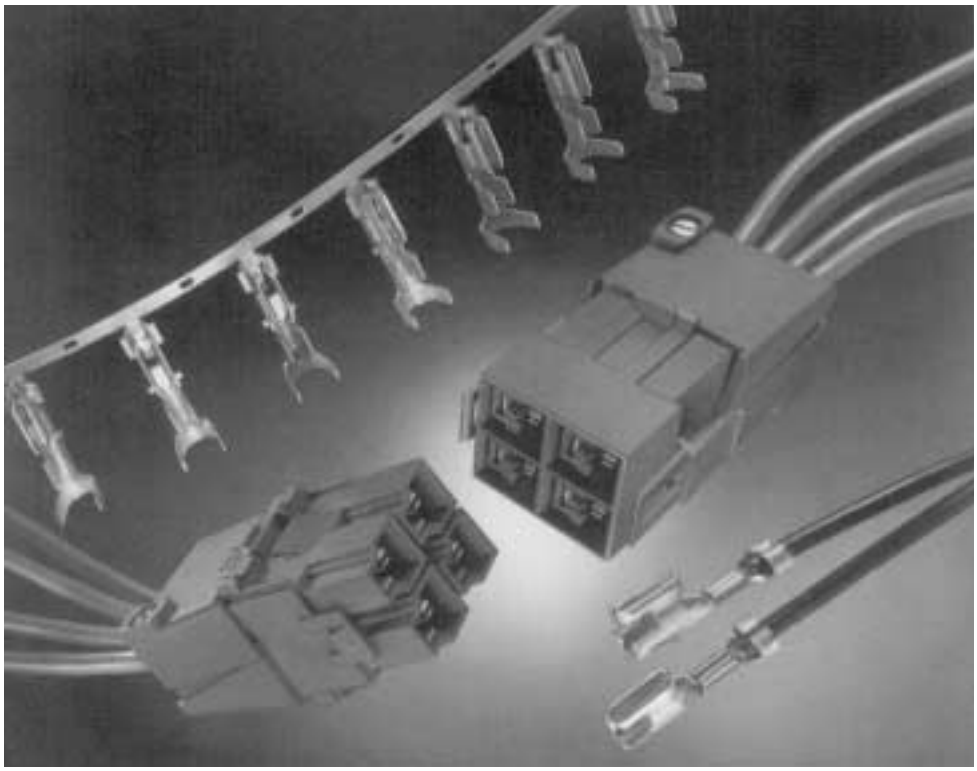

This connector offers high reliability and cost savings for high current commercial connector applications. It can handle 12-8 AWG [3-8 mm²] solid or stranded wire with insulation wall thicknesses to .094 [2.38]. It is suited for use where harness wiring is not routed through costly conduit.

The connector housings are made of 94V-0 nylon in brick red color. They feature positive lock latches to prevent accidental disengagement. The housings are also polarized by silo construction and can be used in free hanging form or panel mounted form with the plug half being mounted to panels .040-.093 [1.02-2.36] thick.

The contacts, made of .025 [0.64] thick pretinned phosphor bronze are hermaphroditic and can be used in either connector half. They are available in two wire ranges accommodating 12-8 AWG [3-8 mm²].

Contact to wire application for 12-8 AWG [3-8 mm²] is by means of machine powered applicators or by means of a hand tool with appropriate die sets.

This connector is furnished in a 4 position (2 x 2 circuit) size only.

Technical Documents:

Product Specification
108-1036

Application Specification
114-1004

Instruction Sheets
408-2095 Hand Tool 69710-1
408-7918 Die Sets 90347-1, 90349-1, 90349-2
408-9520 Extraction Tool 58413-1

For complete product information, order Catalog 82054

4-Circuit High Current Connectors

Hermaphroditic Contacts

Material and Finish:

Phosphor bronze, tinned

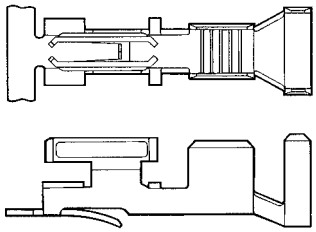

Wire Size Range AWG	Wire Size Range [mm²]	Ins. Dia. (Max.)	Contact Part Numbers Strip	Contact Part Numbers Loose Piece	Applicator Part Numbers	Die Set Part Numbers[1]
12-10	3-6	.360 9.14	350650-1	350821-1	466173-3[2]	90349-2
8	7-8	.360 9.14	350650-1	350821-1	466173-3[2]	90348-2

[1] Use with Hand Tool Part Number 69710-1
[2] Use with Model G Terminating Machine Part Number 354500-1
Contact Extraction/Lance Reset Tool Part Number 58413-1

Cap

Part Number 643267-1 (marked)*
643267-3 (marked)*
Part Number 643267-2 (unmarked)

*Characters 3 and 4 marked on near surface, as shown; characters 1 and 2 marked on opposite side.

Material:

94V-0 nylon, brick red (643267-1, -2)
94V-2 nylon, black (643267-3)

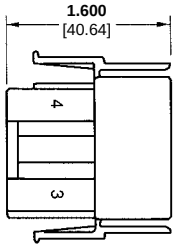

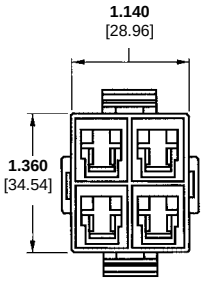

Plug

Part Number 641685-1 (unmarked)
Part Number 641685-2 (marked)*

*Characters 3 and 4 marked on near surface, as shown; characters 1 and 2 marked on opposite side.

Material:

94V-0 nylon, brick red

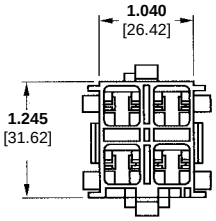

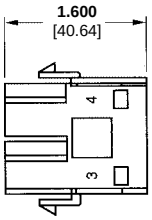

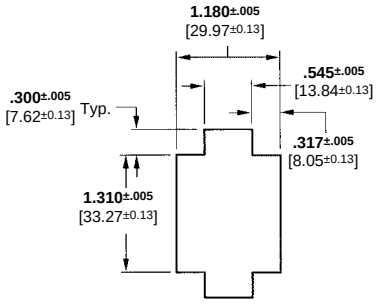

Recommended Panel Cutout

For complete product information, order Catalog 82054

Products for Industrial & Commercial Applications
Dimensions are shown for reference purposes only.
Dimensions are in inches and millimeters unless otherwise specified. Values in brackets are metric equivalents.
Specifications subject to change.
Technical Support Center
1-800-522-6752
www.tycoelectronics.com

4-Circuit High Current Connectors — Accessories

Strain Relief – 2 Required (Used with plug or cap)

Part Number 643266-1

Material:

94V-0 nylon, brick red

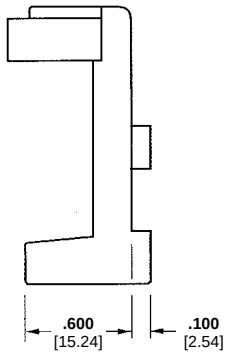

Strain Relief Adapter – 2 Required (Used with plug housing only)

(attached to plug housing, providing feature to attach strain relief)

Part Number 643268-1

Material:

94V-0 nylon, brick red

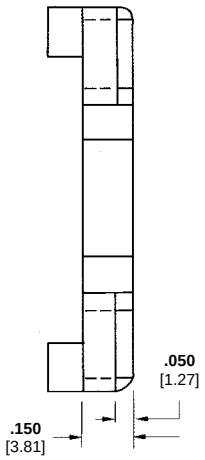

Product Facts

- **High current handling capability: 31 or 53 amperes maximum depending on application (reference product specs)**
- **Modular housings for multiple connector applications**
- **Assortment of mounting accessories available**
- **Interlock between adjacent housings to assist assembly**
- **Precision formed contacts available in strip form for high-speed automatic machine application or loose piece for hand tool application**
- **Integral stainless steel locking spring in housing for contact retention and reliable contact performance**
- **Choice of silver or gold plated copper contacts**
- **Housing of impact resistant thermoplastic**
- **Accepts wire size range 18–6 AWG [0.8-15 mm²]**
- **Positive electrical continuity provided by self-cleaning wiping action of mated contacts**
- **Recognized under the Component Program of Underwriters Laboratories Inc., File No. E-28476**
- **Certified by Canadian Standards Association, File No. LR 7189**



93244

AMP Power Lock Connectors have hermaphroditic housing and contact designs. The hermaphroditic housings are also modular in design and permit the clustering of connectors of the same series. Housings are made of impact resistant thermoplastic with stainless steel locking springs for contact stability. Terminals are available in strip and loose piece form with a material choice of silver, or gold plated copper. Contacts for Series I Connectors accept a wire size range of 18–12 AWG [0.8-3 mm²] and contacts for Series II Connectors accept a wire size range of 10–6 AWG [6-15 mm²]. Both insert easily into housings where integral locking springs provide positive retention.

AMP Power Lock Connectors can be adapted to most high current applications and may be used as free-hanging, surface mounted and thru-panel mounted connectors, or when posted contacts are used, they can be used on printed circuits.

Precision formed contacts are available in strip form for automatic machine application, providing maximum production and minimum assembly time.

Technical Documents:

Product Specifications
108-11026 Series I
108-11043 Series II

Instruction Sheets
408-2624 Series I Housings
408-2928 Series I Contacts
408-2597 Series II Housings
408-3196 Series II Contacts

Application Specification
114-6032 Series II

For complete product information, order Catalog 65864

Products for Industrial & Commercial Applications

Dimensions are shown for reference purposes only.

Dimensions are in inches and millimeters unless otherwise specified. Values in brackets are metric equivalents.

Specifications subject to change.

Technical Support Center
1-800-522-6752
www.tycoelectronics.com

Series I Connectors

Contacts

Material:

Contact — Copper

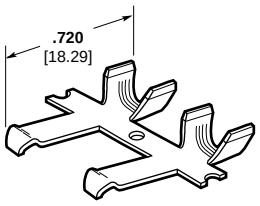

Crimp Contact

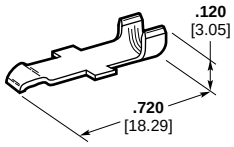

Solder Contact

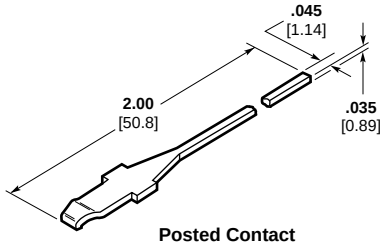

Posted Contact

Type	Wire Range		Plating	Part Numbers	
	AWG	mm²		Strip Form	Loose Piece
Crimp Contact	18-12	0.8-3	Silver	53892-2	53892-4
			Gold*	53892-8	53892-7
Solder Contact	12 Max.	3	Silver	—	54329-1
Posted Contact	—	—	Silver	—	54326-2
			Gold*	—	54326-1

*.000030 [0.00076] gold over .000050 [0.0013] nickel

Single-Circuit Housing Assemblies

Material:

Housing — Polycarbonate

Color	Part Number
White	53894-1
Black	53894-2
Green	53894-3
Red	53894-4
Yellow	53894-5
Blue	53894-6

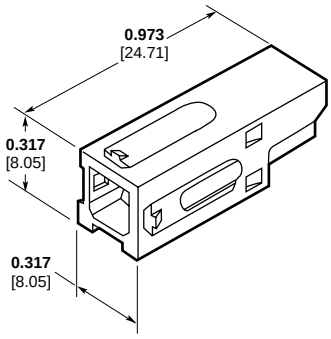

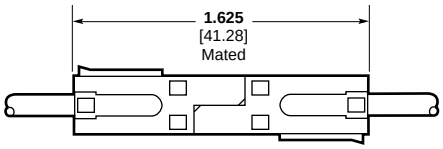

Adapters

Material:

Housing — Polycarbonate, red

Typical Mounting Configuration

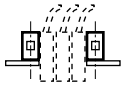

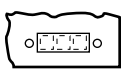



Thru-Panel Mount Vertical Mount

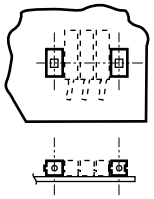

Surface Mount

Spacer

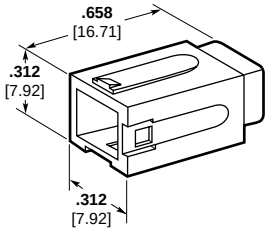

Part Number 53899-2

Mounting Adapter

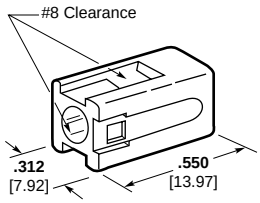

Part Number 54315-1

Key

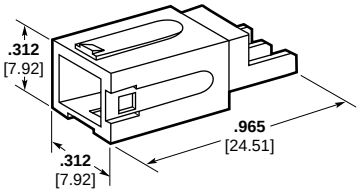

Part Number 53899-1

For complete product information, order Catalog 65864

Products for Industrial & Commercial Applications

Dimensions are shown for reference purposes only.

Dimensions are in inches and millimeters unless otherwise specified. Values in brackets are metric equivalents.

Specifications subject to change.

Technical Support Center
1-800-522-6752
www.tycoelectronics.com

Series I Connectors

2 to 6 Position In-Line Housings

Material:

Housing — Nylon, natural color

Note: In-Line Housings with and without mounting flanges can be mated with suitably arranged clusters of single-circuit housings found on page 12026.

With Mounting Flanges

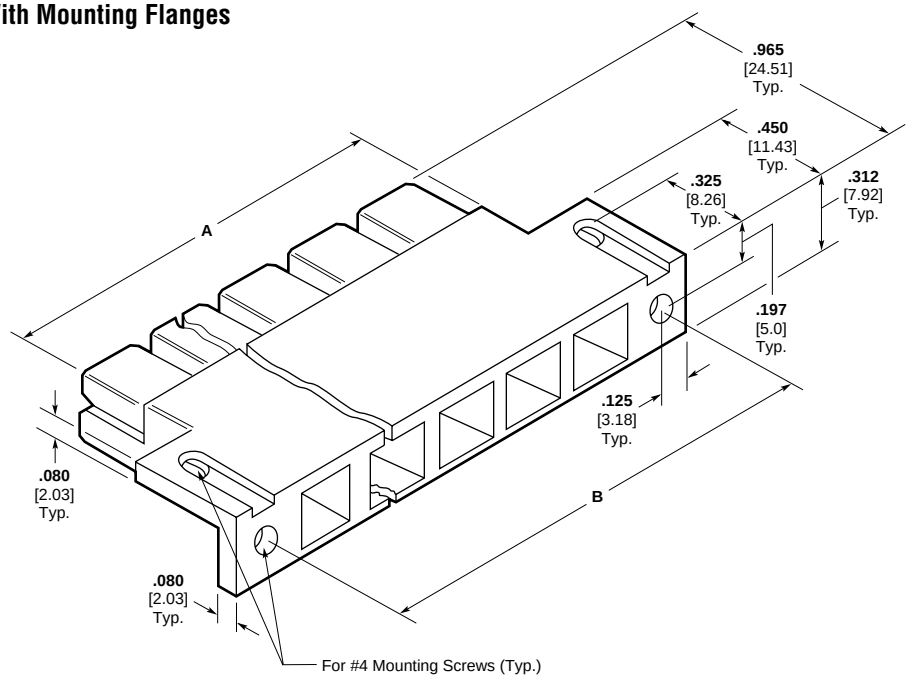

Without Mounting Flanges

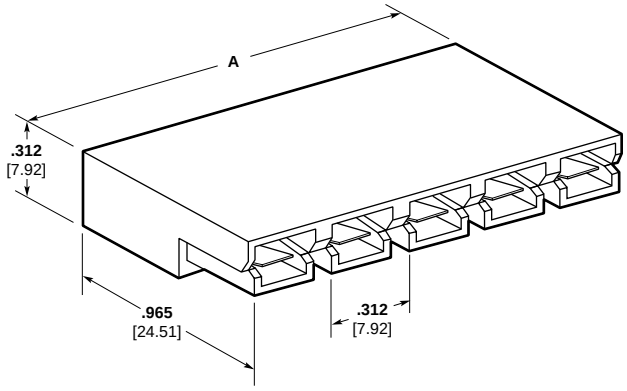

No. of Positions	Dimensions		Part Numbers	
	A	B*	With Flanges	Without Flanges
2	**.624** 15.85	**.874** 22.2	54489-2	54483-2
3	**.936** 23.77	**1.186** 30.12	54489-3	—
4	**1.248** 31.7	**1.498** 38.05	54489-4	54483-4
6	**1.872** 47.55	**2.122** 53.9	54489-6	—

*Dimension required only for housing with mounting flanges.

For complete product information, order Catalog 65864

Products for Industrial & Commercial Applications

Dimensions are shown for reference purposes only.

Dimensions are in inches and millimeters unless otherwise specified. Values in brackets are metric equivalents.

Specifications subject to change.

Technical Support Center
1-800-522-6752
www.tycoelectronics.com

Series II Connectors

Contacts

Material:

Contact — Copper

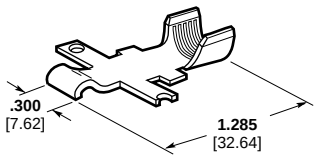

Crimp Contact

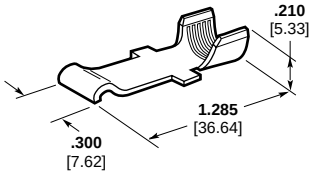

Solder Contact

Type	Wire Range AWG	Wire Range mm²	Plating	Part Numbers Loose Piece
Crimp Contact	10-6	6-15	Silver	53880-4
Solder Contact	6 Max.	15 Max.	Silver	54330-1

Connector Housing Assembly

Part Numbers 53884-1 blue
53884-3 black
53884-4 red

Material:

Housing — Polycarbonate

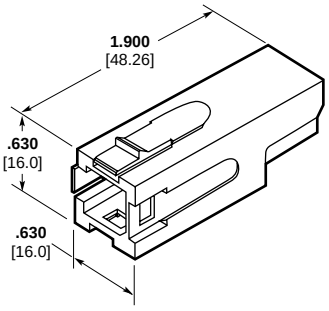

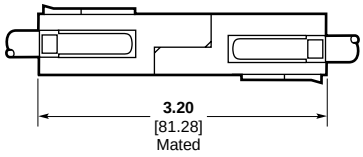

Panel Mounting Adapters

Part Numbers 53886-1 female
53887-1 male

Material:

Housing — Polycarbonate, blue

Mounting Dimensions

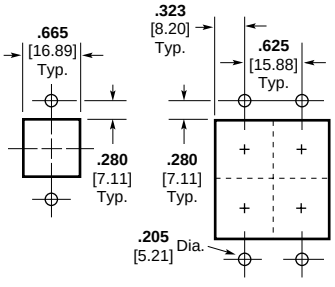

Female Adapter

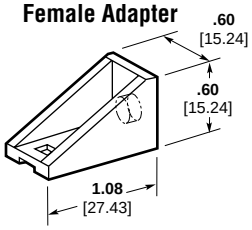

Part Number 53886-1

Male Adapter

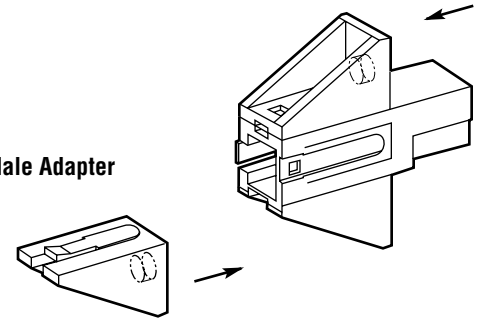

Part Number 53887-1

Surface Mounting Adapter

Part Number 53885-1

Material:

Housing — Polycarbonate, blue

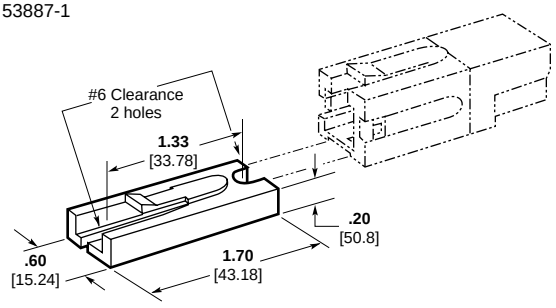

For complete product information, order Catalog 65864

Products for Industrial & Commercial Applications

Dimensions are shown for reference purposes only.

Dimensions are in inches and millimeters unless otherwise specified. Values in brackets are metric equivalents.

Specifications subject to change.

Technical Support Center
1-800-522-6752
www.tycoelectronics.com

Application Tooling

Series I Connector Tooling

The Series I AMP Power Lock Contact can be terminated in the industry accepted AMP-O-LECTRIC Semiautomatic Terminating Machine. This machine accepts a special side-feed mini-applicator which permits you to "dial-in" the proper crimp height and provides a reliable crimp. The Heavy Head Hand Tool is also available for limited production requirements using loose piece contacts.



Heavy Head Hand Tool
Part Number 68347-1 (Instruction Sheet 408-2734)

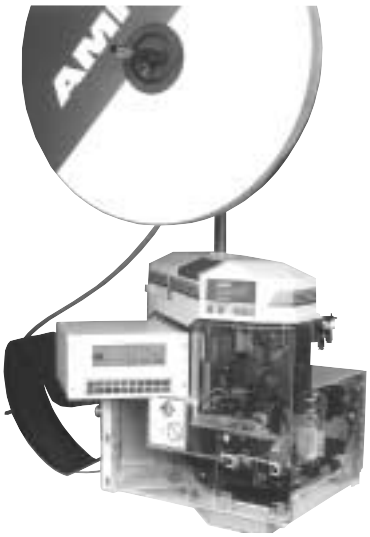

Model G Terminator

Note: Contact Extraction Tool
Part Number 68265-1
May be ordered, if desired.

AMP-O-LECTRIC Model "G" Terminating Machine
Part Number 354500-1 (Customer Manual 409-5842)

AMPOMATOR CLS IV+ Lead-Making Machine
Part Number 356500-1, -2

Heavy-Duty, Side Feed Miniature Applicators
Part Number 466516-7 **for Model "K" Terminating Machine** (Applicator Instruction 408-8074)
Part Number 466516-6 **for CLS IV+ Lead-Making Machine** (Applicator Instruction 408-8074)

Series II Connector Tooling

The Semiautomatic Power Applicator is designed to produce a carefully controlled uniform pressure crimp while providing a high rate of production. The applicator features matching dies that fully bottom at the completion of the crimp to provide proper crimp height. The one die set is fully adjustable to provide the full range of crimp heights for all wire sizes.

For limited applications the BANTAM ROTA-CRIMP Hand Tool produces the same unform crimp.



BANTAM ROTA-CRIMP Hand Tool
Part Number 68321-1 (Instruction Sheet 408-2681)



Power Applicator
Part Number 68296-1 (Customer Manual 409-2661)

For complete product information, order Catalog 65864

Products for Industrial & Commercial Applications

Dimensions are shown for reference purposes only.

Dimensions are in inches and millimeters unless otherwise specified. Values in brackets are metric equivalents.

Specifications subject to change.

Technical Support Center
1-800-522-6752
www.tycoelectronics.com

Product Facts

- **Ratings: 600 VAC (RMS), current ratings range from 12-35 amps**
- **Receptacles polarized to plug**
- **Receptacles and plugs available in contact configurations of 2 through 8 positions**
- **Vertical receptacle polarized to PCB**
- **Receptacle contacts have dual solder posts for efficient heat dissipation, low millivolt drop and mechanical strength**
- **Receptacles may be mounted on PCBs .062 [1.57] to .125 [3.17] thick**
- **Plugs have positive latching to receptacles**
- **Removable crimp contacts latch firmly in plug**
- **Plugs are one piece design**
- **Two ranges of crimped contacts accommodate either 10-12 AWG or 14-16-18 AWG conductors**
- **UL Recognized, File No. E28476**
- **CSA Certified, File No. LR7189-239**

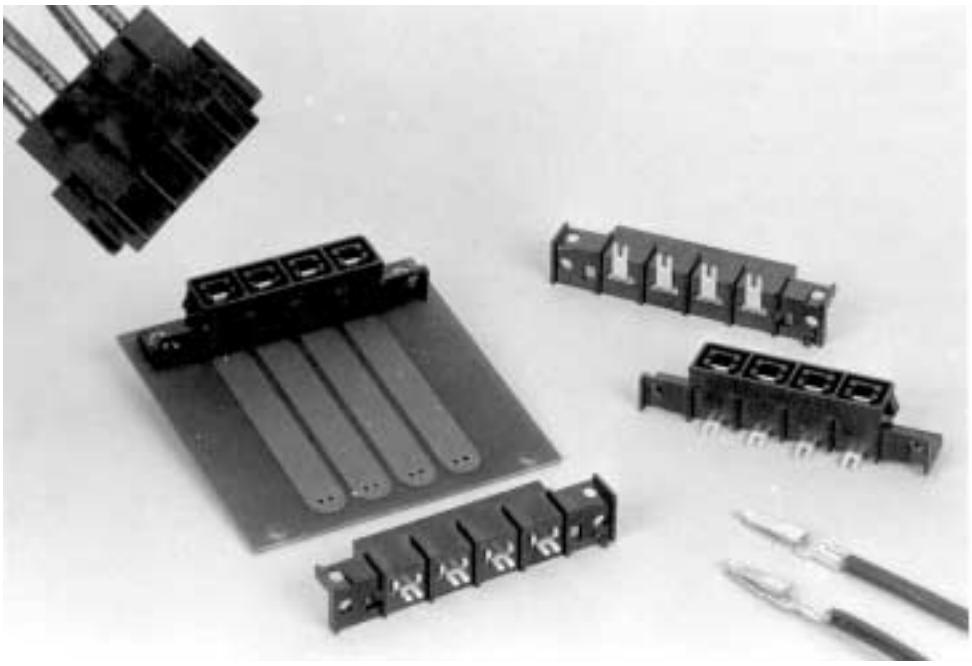

AMPINNERGY Wire-To-Board (WTB) Connectors

Connectors provide a convenient and efficient means of delivering up to 600 VAC to component printed circuit boards and other power distribution devices in computers and peripherals, telephone systems and appliances. The WTB connectors also have automotive and industrial applications.

Receptacles

The AMPINNERGY WTB connector receptacles can be installed on pc boards varying in thickness from .062 [1.57] to .125 [3.17]. A polarizing pin is provided on the vertical receptacle assembly to aid in proper positioning on the pc board. Both the vertical and right-angle assemblies are polarized for virtually error-free mating to the plug assemblies. The receptacle assemblies are available in contact configurations ranging from two to eight positions.

Plugs

The single piece plug housings are available in contact configurations to mate with the receptacles. The plug is equipped with positive latches to allow full and secure mating to the respective receptacle.

A make-first/break-last feature is designed into position 1 of the plug assemblies to provide grounding protection.

Contacts

The crimp contacts will accommodate 10-12 AWG or 14-16-18 AWG conductors. The contacts latch firmly within the plug housing.

Product Specification
108-1349
AMPINNERGY WTB Connectors

Application Specification
114-6044 AMPINNERGY WTB Connectors

Instruction Sheets
408-3236 Installation of AMPINNERGY WTB Connectors
408-3198 Inspection of AMPINNERGY Contacts

For complete product information, order Catalog 82832

Products for Industrial & Commercial Applications

Dimensions are shown for reference purposes only.

Dimensions are in inches and millimeters unless otherwise specified. Values in brackets are metric equivalents.

Specifications subject to change.

Technical Support Center
1-800-522-6752
www.tycoelectronics.com

Vertical Receptacle

Product Facts

- Withstands vapor phase, infrared and wave soldering processes
- .040 [1.01] minimum standoff to PCB
- Polarized to PCB; to plug
- Contact centerline spacing: .440 [11.17]
- Overall height on PCB: .600 [15.24]
- Fits PCB thickness .062 [1.57] through .125 [3.17]
- Contacts have dual solder posts for efficient heat dissipation, low millivolt drop and mechanical strength
- Positive latching to mating plug

Material and Finish:

Housing — Polyphenylene Sulfide, Black, 94V-0

Contacts — Tin Plated Copper Alloy

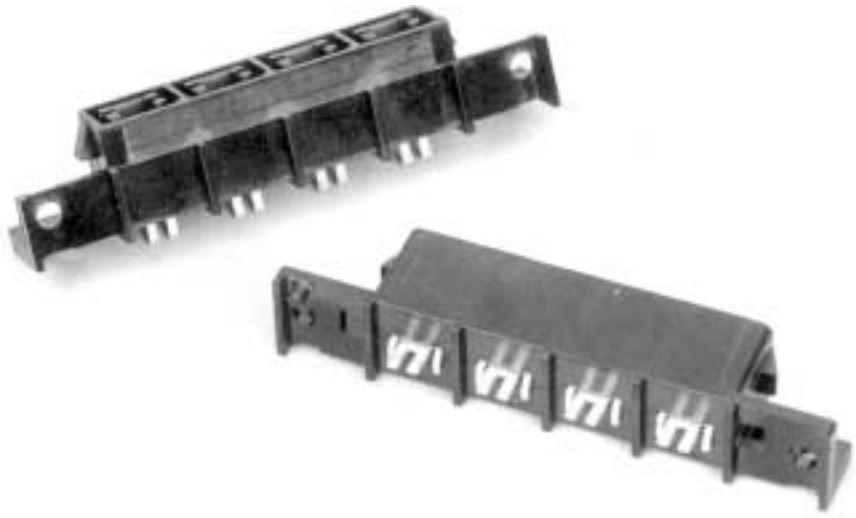

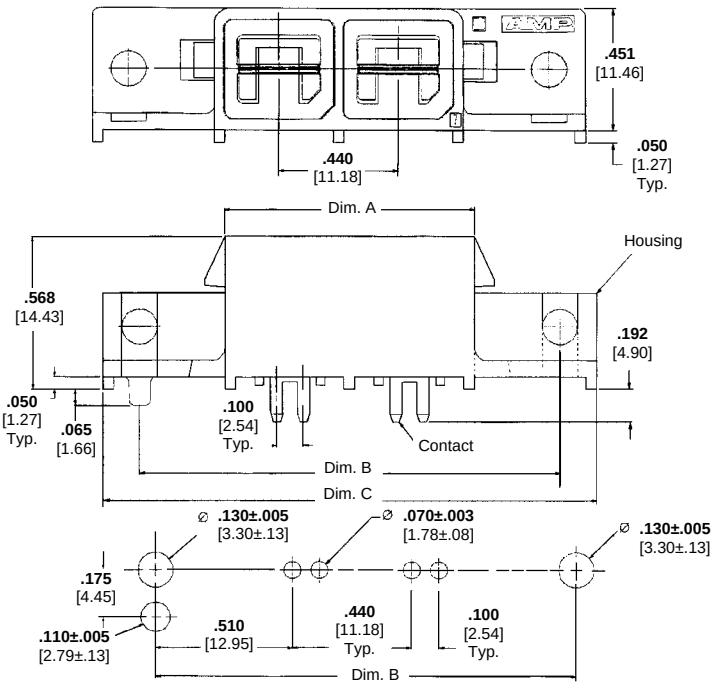

PCB Thickness — .062 [1.57] thru .125 [3.17]

No. of Positions	Dimensions A	Dimensions B	Dimensions C	Receptacle Part Numbers
2	**.93** 23.50	**1.56** 39.62	**1.84** 46.61	556881-2
3	**1.37** 34.68	**2.00** 50.80	**2.28** 57.79	556881-3
4	**1.81** 45.85	**2.44** 61.98	**2.72** 68.97	556881-4
5	**2.25** 57.03	**2.88** 73.15	**3.16** 80.14	556881-5
6	**2.69** 68.20	**3.32** 84.33	**3.60** 91.32	556881-6
7	**3.13** 79.38	**3.76** 95.50	**4.04** 102.49	556881-7
8	**3.57** 90.56	**4.20** 106.68	**4.48** 113.67	556881-8

PCB Thickness — .250 [6.35]

No. of Positions	Receptacle Part Numbers
4	558574-1
6	558084-1

For complete product information, order Catalog 82832

Products for Industrial & Commercial Applications

Dimensions are shown for reference purposes only.

Dimensions are in inches and millimeters unless otherwise specified. Values in brackets are metric equivalents.

Specifications subject to change.

Technical Support Center
1-800-522-6752
www.tycoelectronics.com

Right-Angle Receptacle

Product Facts

- Withstands vapor phase, infrared and wave soldering processes
- .040 [1.01] minimum standoff to PCB
- Receptacles polarized to plug
- Contact centerline spacing: .440 [11.17]
- Overall height on PCB: .600 [15.24]
- Fits PCB thickness .062 [1.57] through .125 [3.17]
- Contacts have dual solder posts for efficient heat dissipation, low millivolt drop and mechanical strength
- Positive latching to mating plug

Material and Finish:

Housing — Polyphenylene Sulfide, Black, 94V-0

Contacts — Tin Plated Copper Alloy



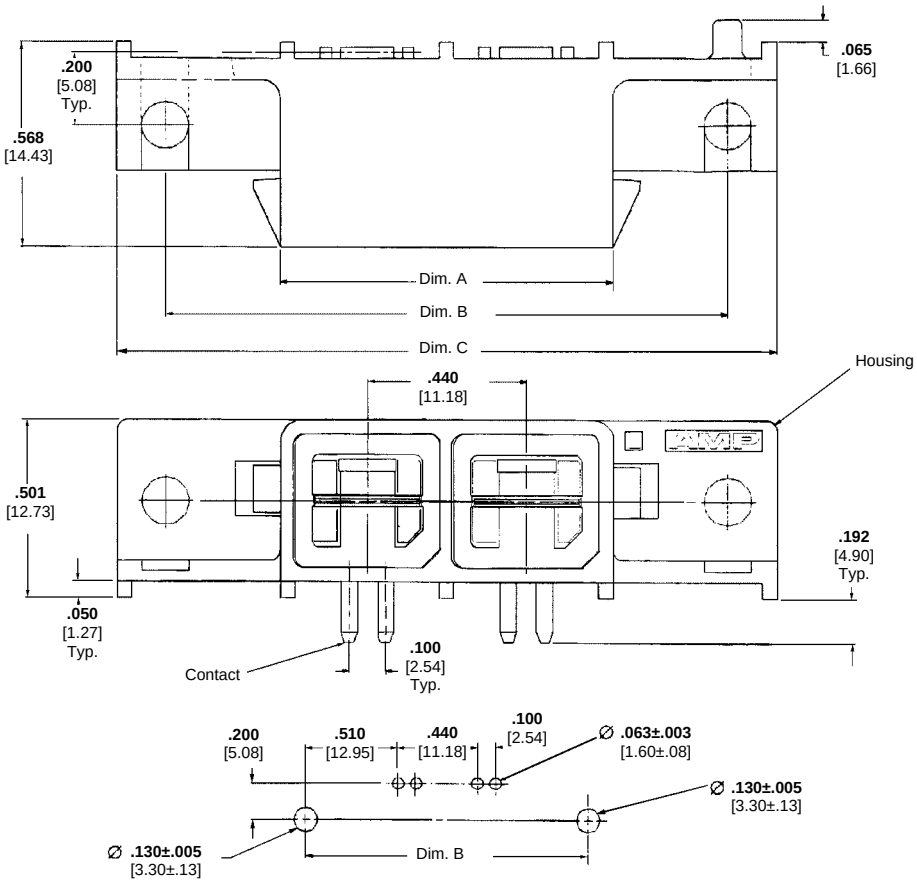

PCB Thickness — .062 [1.57] thru .125 [3.17]

No. of Positions	Dimensions A	Dimensions B	Dimensions C	Receptacle Part Numbers
2	**.93** 23.50	**1.56** 39.62	**1.84** 46.61	556882-2
3	**1.37** 34.68	**2.00** 50.80	**2.28** 57.79	556882-3
4	**1.81** 45.85	**2.44** 61.98	**2.72** 68.97	556882-4
5	**2.25** 57.03	**2.88** 73.15	**3.16** 80.14	556882-5
6	**2.69** 68.20	**3.32** 84.33	**3.60** 91.32	556882-6
7	**3.13** 79.38	**3.76** 95.50	**4.04** 102.49	556882-7
8	**3.57** 90.56	**4.20** 106.68	**4.48** 113.67	556882-8

For complete product information, order Catalog 82832

Products for Industrial & Commercial Applications
Dimensions are shown for reference purposes only.
Dimensions are in inches and millimeters unless otherwise specified. Values in brackets are metric equivalents.
Specifications subject to change.
Technical Support Center
1-800-522-6752
www.tycoelectronics.com

Plug Housing

Product Facts

- One-piece housing
- Polarized to mating receptacles
- Positive latching to mating receptacles
- Accepts crimp contacts P/N 556880-2 and 556883-1
- Internal latching of crimp contact

Material and Finish:

Housing — Polycarbonate, Black, 94V-0

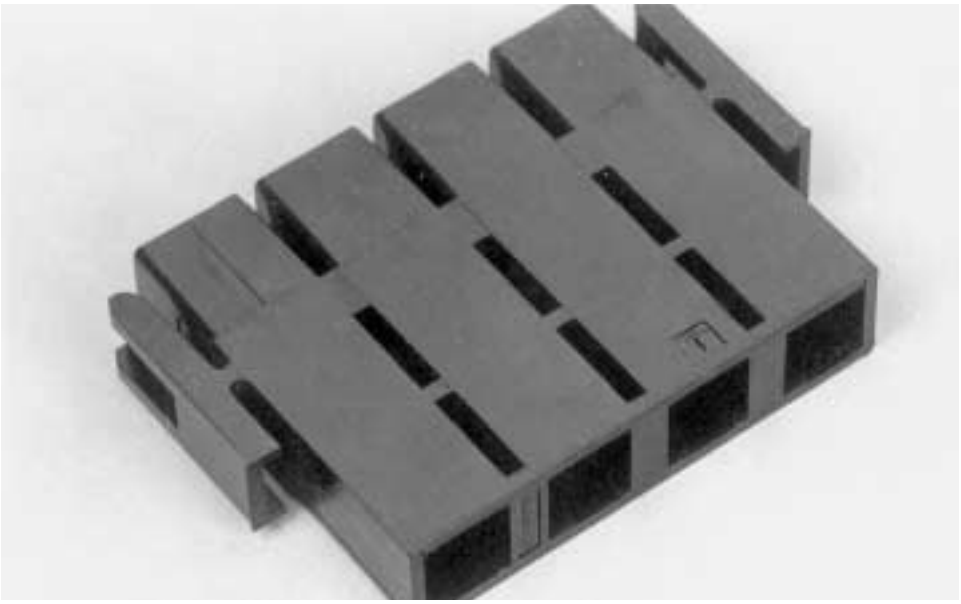

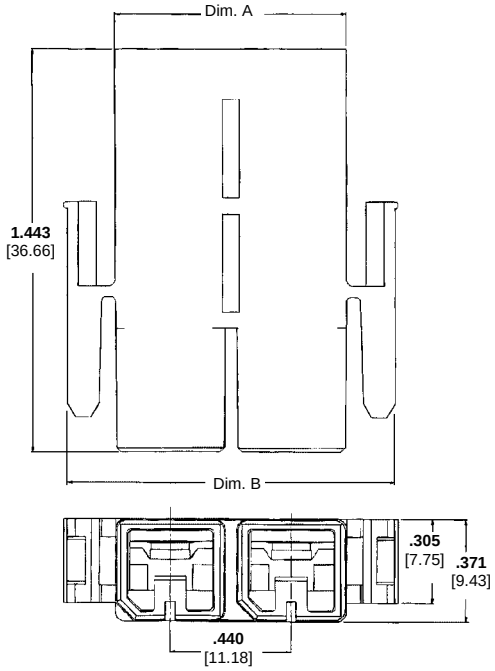

No. of Positions	Dimensions A	Dimensions B	Plug Part Numbers
2	**.85** 21.42	**1.20** 30.31	556879-2
3	**1.29** 32.59	**1.64** 41.48	556879-3
4	**1.73** 43.77	**2.08** 52.66	556879-4
5	**2.17** 54.94	**2.52** 63.83	556879-5
6	**2.61** 77.30	**2.96** 75.01	556879-6
7	**3.05** 77.30	**3.40** 86.19	556879-7
8	**3.49** 88.47	**3.84** 97.36	556879-8

For complete product information, order Catalog 82832

Products for Industrial & Commercial Applications
Dimensions are shown for reference purposes only.
Dimensions are in inches and millimeters unless otherwise specified. Values in brackets are metric equivalents.
Specifications subject to change.
Technical Support Center
1-800-522-6752
www.tycoelectronics.com

Crimp Contacts

Product Facts

- **Contacts are dual beam design**

Material and Finish:

Tin Plated Copper Alloy

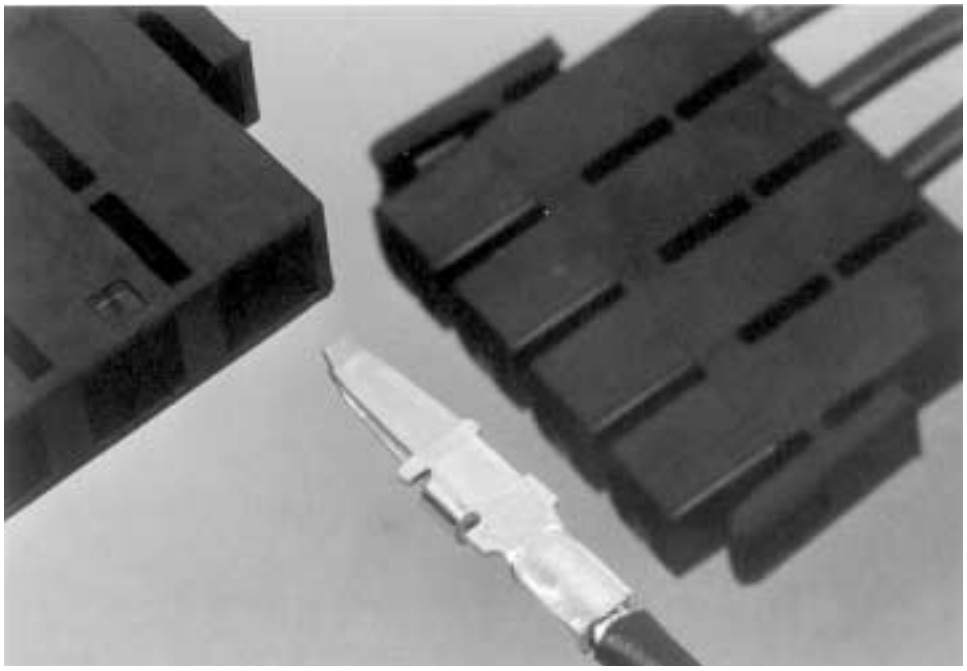

Wire barrel accepts one 10 or 12 AWG stranded copper conductor

Part Number 556880-2 Strip
Part Number 556880-1 Loose Piece

Application Tooling Applicator Part Numbers

567256-3 (for Lead Makers)
567256-4 (for Model K Machine)
567256-6 (for Model G Machine)

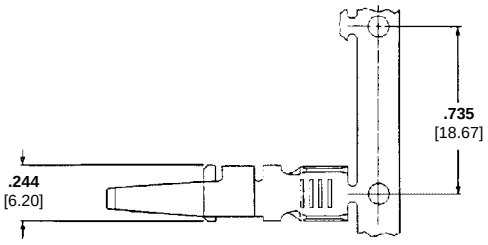

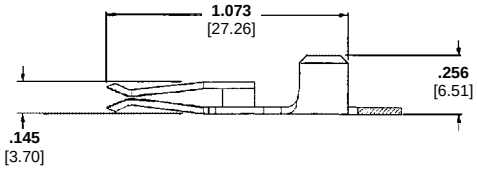

Wire barrel accepts one 14 or 16 or 18 AWG stranded copper conductor

Part Number 556883-1 Loose Piece
Part Number 556883-2 Strip

Application Tooling Part Numbers

69710-1 Hand Tool
58492-1 Die Set (14 AWG)
58493-1 Die Set (18-16 AWG)
91308-1 Extraction Tool

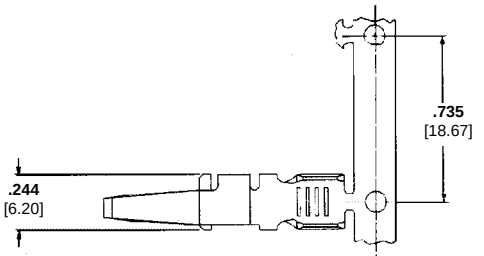

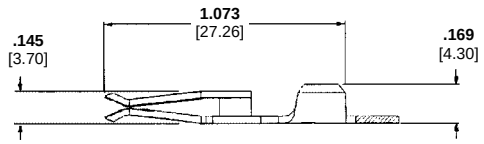

For complete product information, order Catalog 82832

Products for Industrial & Commercial Applications
Dimensions are shown for reference purposes only.
Dimensions are in inches and millimeters unless otherwise specified. Values in brackets are metric equivalents.
Specifications subject to change.
Technical Support Center
1-800-522-6752
www.tycoelectronics.com

Product Facts

- **Rated to 600 VAC (RMS)**
- **Flame retardant housings 94V-0**
- **Housings, adapters, and power terminals keyed for proper assembly**
- **Stackable housings provide easy wire routing and neat wire dressing**
- **Built-in interlocking features resist shock and vibration**
- **Usable as in-line connector, or as panel and surface mount connector**
- **Available in six different colors for circuit coding and identification**
- **Choice of two power terminals accommodates 10-12 AWG and 14-16-18 AWG conductors**
- **UL Component Recognition, File No. E28476**
- **CSA Certified, File No. LR7189**
- **Meets appropriate portions of UL 1977**
- **VDE Registered #5133**

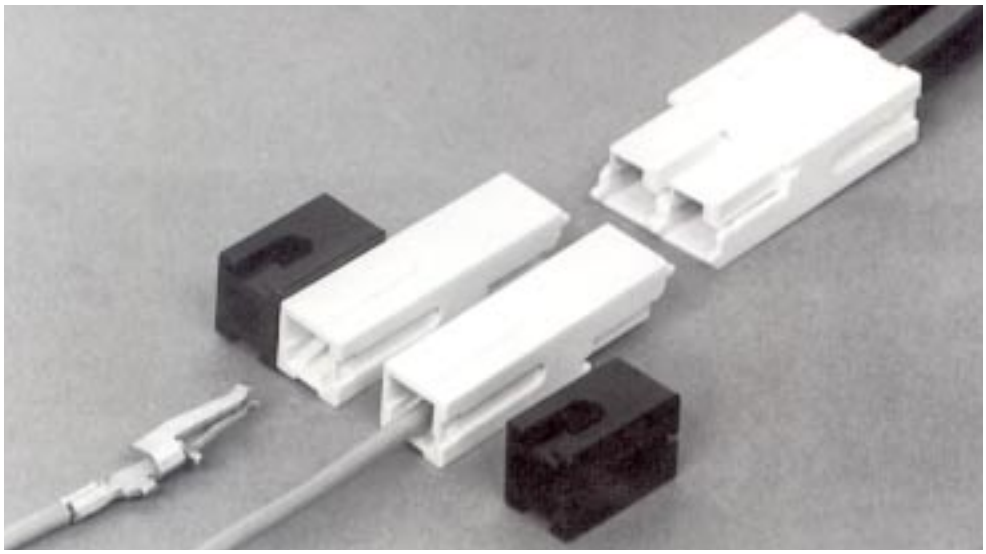

AMPINNERGY Wire-To-Wire (WTW) Connectors provide a reliable and efficient means of interconnecting conductors employed to carry up to 600 VAC in power circuits or networks.

The WTW Connectors consist of mating hermaphroditic, flame retardant polycarbonate housings into which customer terminated power contacts are inserted. Stackable in four directions through the use of molded interlocking keyways, the connectors make wire routing and dressing orderly and easy to accomplish. More importantly, the built-in interlocking features on the connectors and the accessory mounting adapters provide resistance to the effects of shock and vibration, keeping the interconnect stable and secure.

The design features of the WTW Connector make it easily applicable to free hanging, surface mounted or panel mounted applications. By simply sliding the accessory mounting adapters into the molded keyways of the connector housing, a free hanging connector can be transformed into a surface mount connector or a panel mount connector. Customer supplied 8-32 screws and nuts may be used to secure the connectors configured with the mounting adapters to printed circuit boards or distribution panels. The same hardware may be used to secure the connectors to pre-cut openings in the panels.

Furthermore, WTW Connector housings, mounting adapters and power terminals are all provided with alignment or keying features that make it nearly impossible to improperly assemble and apply the connector. Alignment slots and tabs on the plastic connector housings provide for easy mating of the housings, even in the dark! Mounting adapters have a keyway on one side and a key on the other side providing for easy assembly to the connector by touch alone if necessary. And the power terminals have a side tab that prevents the incorrect insertion of the terminated conductor into the housing. Once inserted, the contacts firmly latch within the connector housing.

The WTW Connector system is available in six different and distinctive colors which makes circuit differentiation and identification possible. The crimped power terminals will accommodate either 10-12 AWG or 14-16-18 AWG stranded conductors. Depending upon the conductor size and the number of conductors in the connector configuration, the current rating ranges from 10 amperes to 55 amperes.

Technical Documents:

Product Specification
108-1373 AMPINNERGY WTW Connectors

Application Specification
114-6051

Instruction Sheets
408-3277 AMPINNERGY Wire-To-Wire Stackable Connectors

408-3198 Inspection of AMPINNERGY System Power Contacts

For complete product information, order Catalog 65211

Products for Industrial & Commercial Applications
Dimensions are shown for reference purposes only.
Dimensions are in inches and millimeters unless otherwise specified. Values in brackets are metric equivalents.
Specifications subject to change.
Technical Support Center
1-800-522-6752
www.tycoelectronics.com

Housings

Material and Finish:

Housing — Polycarbonate, 94V-0

For surface mounting and panel mounting information, see Instruction Sheet 408-3277, AMPINNERGY Wire-To-Wire Stackable Connectors.

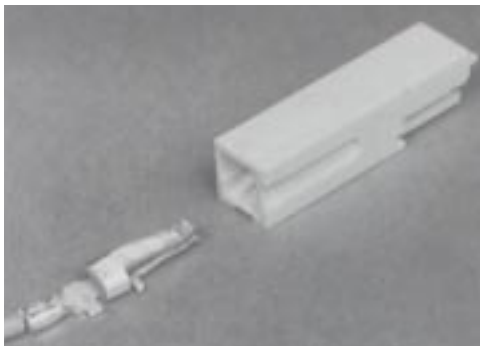

Customer terminated power contacts are inserted into housings

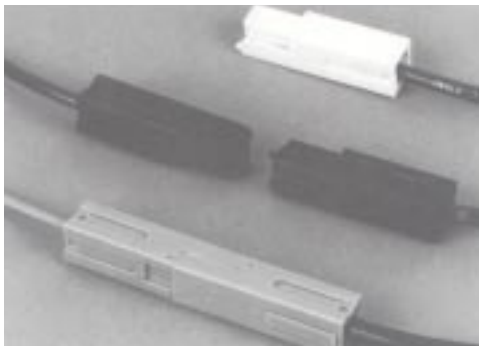

Free Hanging Interconnections

Color	Housing Part Numbers
White	556137-1
Green	556137-3
Blue	556137-6
Gray	556137-8

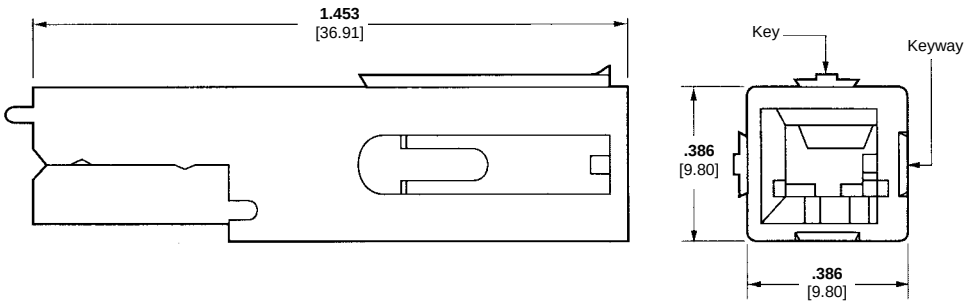

Wire-To-Wire Connector Housing

Mounting Adapters

Part Number 557313-1

Material and Finish:

Housing — Polycarbonate, Black

Two mounting adapters can be used with one or more connector housings to provide thru-panel or horizontal surface mounting capability of the completed assembly.

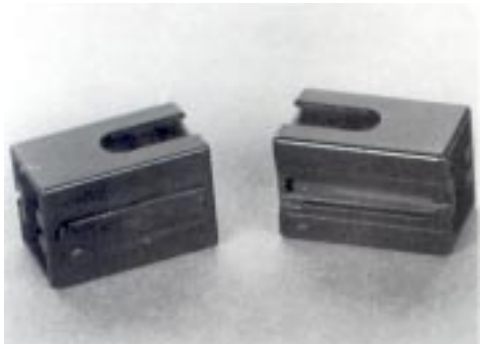

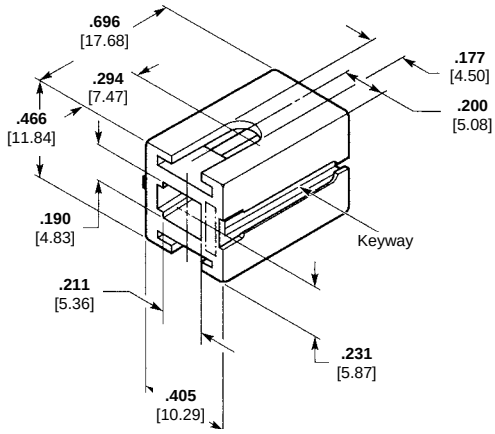

External Locking Latch Clip

Part Number 557640-1

AMPINNERGY Wire-To-Wire Connector Housings have an integral locking feature designed to keep housings mated in most applications. Hower, the External Locking Latch Clip may be used as needed in applications where severe vibration or tension may pull mated housings apart.

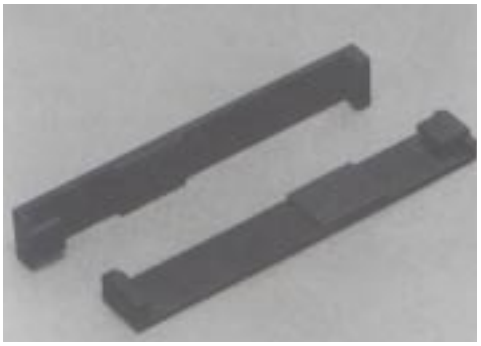

AMPINNERGY Wire-To-Wire Clips
Part Number 557640-1



AMPINNERGY Wire-To-Wire Clips (Installed)
Part Number 557640-1

For complete product information, order Catalog 65211

Products for Industrial & Commercial Applications
Dimensions are shown for reference purposes only.
Dimensions are in inches and millimeters unless otherwise specified. Values in brackets are metric equivalents.
Specifications subject to change.
Technical Support Center
1-800-522-6752
www.tycoelectronics.com

Power Terminals

Material and Finish:

Contacts — Copper alloy plated with .000100 [0.00254] minimum tin

The Wire-To-Wire Connector Power Contacts are available in either strip form or in loose piece form.

Contacts in strip form are terminated on continuous feed type terminators and the loose piece contacts are terminated with the hand tool or pneumatic tool.

For wire preparation and crimped contact inspection information, refer to Instruction Sheet 408-3198, Inspection of AMPINNERGY System Power Contacts.

Loose Piece

Part Number 556136-2

Part Number 556135-2

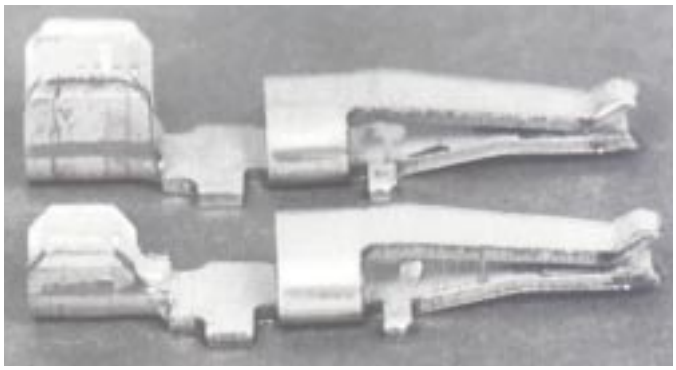

Contact Part Numbers	Wire Size (AWG)	Hand Tool Part Number	Pneumatic Tool Part Numbers	Die Set Part Numbers
556135-2 (loose piece)	18-16	69710-1	189721-2*	58493-1
	14			58492-1
556136-2 (loose piece)	12			58490-1
	10			58491-1

*Requires "C" Head Adapter Part No. 318161-1 and Adapter Holder Part No. 189928-1. See Catalog 124208 for more information.

Note: The same Hand Tool or Pneumatic Tool and Die Sets may be used to apply the Wire-To-Board Connector Terminals.

Strip Form

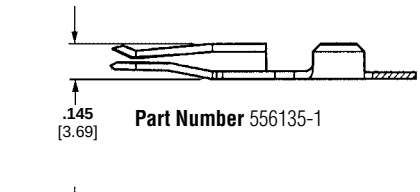

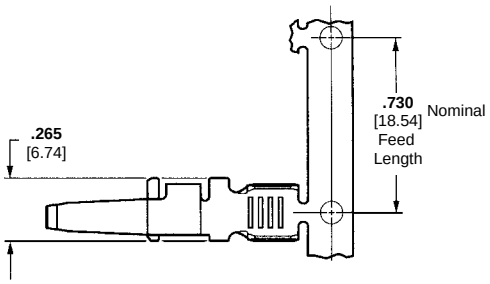

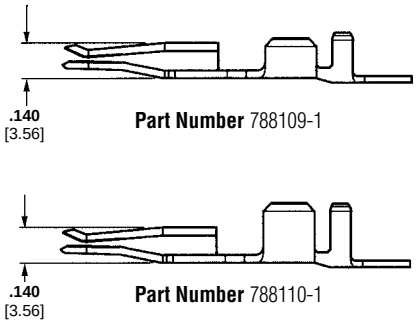

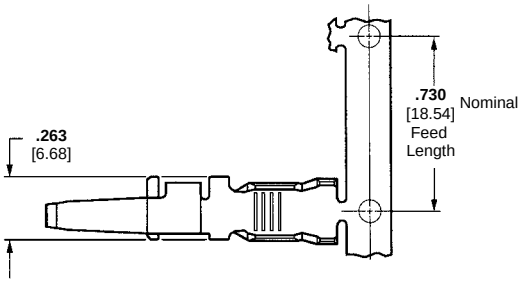

Contact Part Numbers	Wire Size (AWG)	Model G Terminating Machine	Applicator Part Numbers
556135-1 (strip)	18-16-14	354500-1	567403-3
556136-1 (strip)	10-12	354500-1	567256-6
788109-1 (strip)	18-14	354500-1	680447-3
788110-1 (strip)	10-12	354500-1	680449-3

For complete product information, order Catalog 65211

Products for Industrial & Commercial Applications
Dimensions are shown for reference purposes only.
Dimensions are in inches and millimeters unless otherwise specified. Values in brackets are metric equivalents.
Specifications subject to change.
Technical Support Center
1-800-522-6752
www.tycoelectronics.com

Relays and circuit breakers from Agastat, OEG, P&B and Schrack meet the exacting requirements of demanding applications.



Low- to mid-range PC board relays
- Dry circuit to 15 amp ratings
- SPST-NO through DPDT
- Sealed or flux-tight units



Power PC board relays
- Contact ratings to 30 amps
- SPST-NO through DPDT
- Open, enclosed and sealed



General purpose relays
- Ratings to 15 amps
- Various contact arrangements
- Many mounting, enclosure, coil and termination options

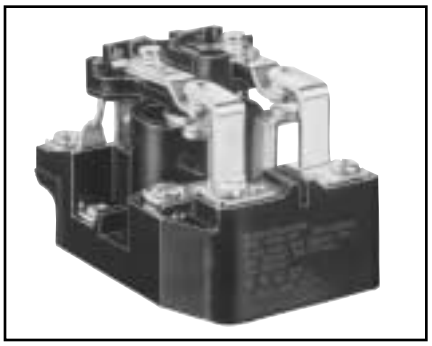

Panel-mount power relays
- Ratings to 50 amps
- SPST-NO through 4PDT
- Many mounting, enclosure and termination options

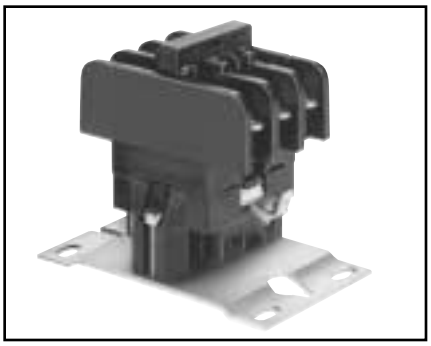

Definite purpose contactors
- Ratings to 50 amps
- 3 and 4 pole models
- AC and DC coil versions

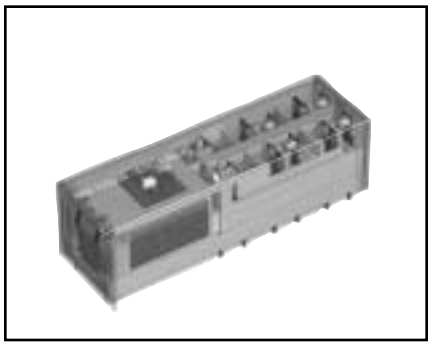

Forcibly-guided contact relays
- Two, four and six pole models
- Make and break contacts can not be closed simultaneously
- Mounting boards available



Solid state relays
- Ratings to 125 amps/480VAC
- Single, dual and quad output
- AC and DC input models

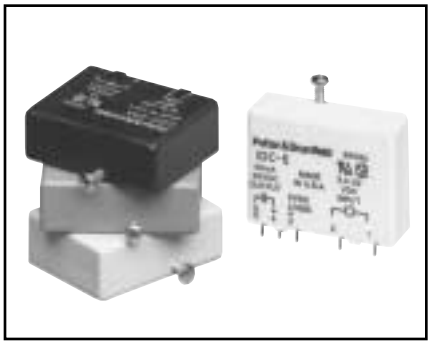

Input/output modules
- Output ratings to 5A AC/3A DC
- Standard and slim line packages
- Mounting boards available



Time delay relays
- All solid state, solid state/EMR and electropneumatic types
- Various timing functions, ranges and package styles

Products for Industrial & Commercial Applications

Dimensions are shown for reference purposes only.

Dimensions are in inches and millimeters unless otherwise specified. Values in brackets are metric equivalents.

Specifications subject to change.

Technical Support Center
1-800-522-6752
www.tycoelectronics.com

Relays and circuit breakers from Agastat, OEG, P&B and Schrack meet the exacting requirements of demanding applications.



Sensors and monitors

- Various types sense/monitor current, voltage and phase
- Plug-in and panel mount types



Thermal circuit breakers

- Contact ratings to 50 amps
- Numerous mounting and termination options available



Magnetic circuit breakers

- Contact ratings to 50 amps
- One through four poles
- Various trip curves offered

Want more information?

For more information on our extensive line of relays and circuit breakers, visit our website at http://relays.tycoelectronics.com. Or call 800-522-6752 and request catalogs. Agastat Timers and Relays are described in Catalog 1308392, while Relay and Circuit Breaker Technical Databook 1308242 covers a broad range of P&B and Schrack industrial products. Catalog 1308961 describes OEG PC Board and General Purpose Relays.



Catalog 1308392



Catalog 1308961

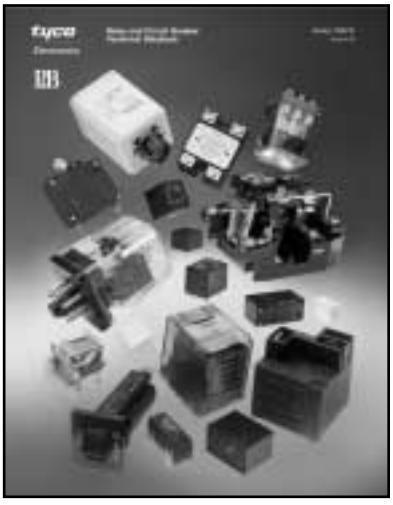

Catalog 1308242

Engineering Notes

Products for Industrial & Commercial Applications

Dimensions are shown for reference purposes only.

Dimensions are in inches and millimeters unless otherwise specified. Values in brackets are metric equivalents.

Specifications subject to change.

Technical Support Center
1-800-522-6752
www.tycoelectronics.com

Table of Contents

Tooling for Crimp Products
- Mechanical Hand Tools for Interchangeable Die Sets 13002, 13003
- Pneumatic Hand Tools for Interchangeable Die Sets 13003
- Electrical Hand Tools for Interchangeable Die Sets 13003
- Hydraulic Hand Tools for Interchangeable Die Sets 13004
- Crimp Machines 13005-13008
- Lead Makers 13008, 13009
- Applicators for End-Feed Products 13010
- Applicators for Side-Feed Products 13010, 13011
- Stripper-Crimper Machines 13011
- Dedicated Hand Tools 13012, 13013
- Special Tool Sets 13013

Tooling for Insulation Displacement Contact (IDC) Products
- Hand Tools for IDC Products 13014, 13015
- Bench Machines for IDC Products 13015,13016
- Harness Board Tools 13016,13017
- Semiautomatic Machines for Discrete Wire 13017
- Semiautomatic Machines for Ribbon Cable 13017
- Semiautomatic Machines for Jacketed Cable 13018
- Automatic Machines for Ribbon Cable 13019
- Automatic Machines for Jacketed Cable 13019

Tooling for Inserted Products
- Connector Insertion Devices 13020,13021
- Single Contact Insertion Devices 13021,13022
- MAG-MATE Products 13022

Tooling for Flexible Circuit Products
- Single-Contact Devices for Flexible Circuits 13022

Auxiliary Equipment
- Strippers 13023-13026
- Cable Cutters 13026
- Cutting Tool 13027
- Crimp Quality Monitor (CQM) 13027

Products for Industrial & Commercial Applications
Dimensions are shown for reference purposes only.
Dimensions are in inches and millimeters unless otherwise specified. Values in brackets are metric equivalents.
Specifications subject to change.
Technical Support Center
1-800-522-6752
www.tycoelectronics.com

Mechanical Hand Tools for Interchangeable Die Sets

CERTI-CRIMP "C" Head Straight Action Hand Tool (SAHT), 69710-1

For more information, request Catalog **65780,** Instruction Sheet **408-2095**.



Premium grade hand tool. Features ratchet control to provide complete crimp cycle. The interchangeable die sets close in a straight line to minimize contact or terminal rotation during crimping. When applicable, user-assist features, such as a contact or terminal locator and a wire stop, are built into the die set. Approximate weight 1.9 lb [0.86 kg].

CERTI-CRIMP Platform Die Hand Tool, 58078-3

For more information, request Catalog **65780,** Instruction Sheet **408-6976**.



Premium grade hand tool for crimping Ultra-Fast and Ultra-Fast Plus FASTON terminals. Features ratchet control to provide complete crimp cycle. Same frame configuration as the TETRA-CRIMP hand tool. Includes an adjustable terminal locator. Approximate weight 1.4 lb [0.64 kg].

CERTI-CRIMP Semi-Rigid Cable Hand Tool, 59980-1 (Military M22520/36-01)

For more information, request Instruction Sheet **408-6788**.

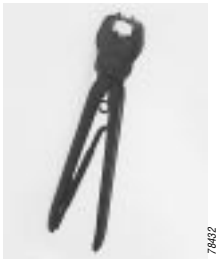

Premium grade hand tool for crimping Blindmate, N, SMA, and TNC connectors onto semi-rigid coaxial cable. Features ratchet control to provide complete crimp cycle. The tool is included in the SMA Tool and Cable Preparation Kit, 59981-1. Locators must be ordered separately, if not included in the kit. Approximate weight 2.0 lb [0.91 kg].

CERTI-LOK Hand Tool, 169400

For more information, request Instruction Sheet **408-6764**.



Premium grade hand tool. Features similar to those of the CERTI-CRIMP "C" Head SAHT. Die sets available to crimp PIDG and PLASTI-GRIP terminals, PIDG "window" splices, SOLISTRAND terminals and splices, and Multimate Type III+ and XII contacts. Approximate weight 1.4 lb [0.49 kg].

Products for Industrial & Commercial Applications

Dimensions are shown for reference purposes only.

Dimensions are in inches and millimeters unless otherwise specified. Values in brackets are metric equivalents.

Specifications subject to change.

Technical Support Center
1-800-522-6752
www.tycoelectronics.com

Mechanical Hand Tools for Interchangeable Die Sets

PRO-CRIMPER II Hand Tool, 354940-1

For more information, request Catalog **82276,** Instruction Sheet **408-9930**.



Commercial grade hand tool for crimping various products. Features ratchet control to provide complete crimp cycle. Accepts both pinned- and shouldered-style die sets. Locators are provided with pinned-style die sets for proper contact and wire positioning, and to help minimize contact rotation and bending during crimping. Approximate weight 1.3 lb [0.60 kg].

Pneumatic Hand Tools for Interchangeable Die Sets

626 Pneumatic Tool System

Specifications:

Outside Diameter—1.83 [46.5]

Length—11.6-12.9 [295-327]

Grip Span—2.19 [55.6] over button/handle

Weight—2.3-3.3 lb [1.0-1.5 kg]

Air—90-100 psi [6.21-6.89 bar], 11.14 in^3 [0.00018 m^3]

Cycle Time—0.7-0.8 sec (16-14 AWG [1.3-2 mm^2] PIDG Terminals)

For more information, request Catalog **124208.**



Lightweight, air-operated modular tooling system. Accepts a wide variety of interchangeable heads for crimping various types of contacts, terminals and splices onto wires ranging 6-26 AWG [13-0.12 mm^2], plus coaxial and fiber optic cable. Available with either hand- or foot-actuation switch. Optional ratchet control available to provide complete crimp cycle.

Electrical Hand Tools for Interchangeable Die Sets

Cordless Electric Power Tool, 933150-1 (Kit, 933592-1)

Specifications:

Width—2.7 [69]

Depth—17 [432]

Height—10 [254]

Weight—12 lb [5.4 kg]

Battery Pack Life—approx. 200 crimps on a full charge

For more information, request Catalog **82205 (COPALUM Connectors and Heat Shrink Tubing System),** Instruction Sheet **408-9425.**



Battery-operated hand tool for crimping 6 and 8 AWG [13 and 8 mm^2] COPALUM splices. This tool is used exclusively for reconnecting aluminum-wired homes, and is provided only to AMP certified installers. The two sizes are crimped in a single, two-cavity, color-coded die set. The battery pack can be removed and recharged.

Products for Industrial & Commercial Applications
Dimensions are shown for reference purposes only.
Dimensions are in inches and millimeters unless otherwise specified. Values in brackets are metric equivalents.
Specifications subject to change.
Technical Support Center
1-800-522-6752
www.tycoelectronics.com

Hydraulic Hand Tools for Interchangeable Die Sets

DYNA-CRIMP Electric-Hydraulic Power Units, 69120-1, -2, plus Heads

Specifications:

Width—9.5 [240]
Depth—11.5 [292]
Height—18.2 [464]
Weight—65 lb [29 kg]
Electrical—120 VAC, 60 Hz (69120-1); 220 VAC, 50 or 60 Hz (69120-2); 3 240 VA max.

For more information, request Instruction Sheet **408-1965**.


26508-A

Power units for crimping large terminals and splices, including AMPOWER and SOLISTRAND terminals, onto wires ranging from 8 AWG [8 mm^2] through 1 000 kcmil [507 mm^2]. Heads and die sets are interchangeable. Available with either hand- or foot-actuation switch, and hose/coupling assemblies up to 28 ft [8.5 m] in length.

Hand-Operated Hydraulic Pump, 314979-1, plus Heads

Specifications:

Width—9.5 [241]
Depth—24 [610]
Height—11.4 [290]
Weight—58 lb [26 kg]

For more information, request Instruction Sheet **408-1965**.


101210

Power unit for crimping large terminals and splices, including AMPOWER and SOLISTRAND terminals, onto wires ranging from 8 AWG [8 mm^2] through 1 000 kcmil [507 mm^2]. It uses the same crimping heads and die sets as DYNA-CRIMP Electric-Hydraulic Power Units. Used primarily for low-volume production or at locations where electrical power is not available.

Hydraulic Hand Crimping Tools, 59973-1, 59974-1, 59975-1

Specifications:

Height—22.5 [572] (59973-1); 18 [457] (59974-1, 59975-1)
Weight—12.5 lb [5.7 kg] (59973-1); 8 lb [3.6 kg] (59974-1, 59975-1)

For more information, request Instruction Sheet **408-1965**.


65-402

Levered hand tools for crimping large terminals and splices onto 8-4/0 AWG [8-100 mm^2] wires for 59973-1 and 8-2 AWG [8-34 mm^2] for 59974-1 and 59975-1. 59975-1 includes a rotating die set for crimping SOLISTRAND terminals and splices only. Bench mount 312324-1 is available for 59973-1.

Products for Industrial & Commercial Applications
Dimensions are shown for reference purposes only.
Dimensions are in inches and millimeters unless otherwise specified. Values in brackets are metric equivalents.
Specifications subject to change.
Technical Support Center
1-800-522-6752
www.tycoelectronics.com

Crimp Machines

5-Ton Machine, 565433-4

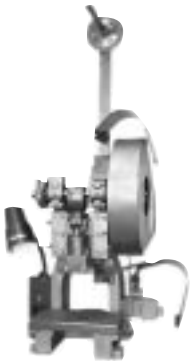

This machine is used with special standard-style applicators to apply terminals and splices requiring crimping forces greater than the maximum output of AMP-O-LECTRIC Termination Machines. The machine is a modification of a fixed-bed, mechanical clutch press manufactured by Benchmaster Products, Inc.

Specifications:

Width—29 [737]
Depth—25.4 [645]
Height—35.5 [902] without reel
Weight—250 lb [113 kg]
Electrical—120 VAC, 60 Hz, 6 A
Air—90-110 psi [6.21-7.59 bar] when required for use with air-feed applicators

For more information, request Catalog **82221 (Magnet Wire Terminals—AMPLIVAR and MAG-MATE)**.

AMPLIVAR Product Terminators (APT)



Semiautomatic bench machines for crimping reeled AMPLIVAR pigtail-type splices and direct connect contacts. All models are equipped with either manual or automatic precision adjustment of crimp height. Options include Crimp Quality Monitor, programmable sequencing of different crimp height settings and a wire stuffer, which automatically inserts additional wire into the splice to meet its minimum specified CMA range.

Specifications:

Width—38 [965] with CQM and product reel
Depth—35 [889]
Height—14 [356]
Weight—156 lb [71 kg]
Electrical—120 VAC, 60 Hz, or 220 VAC, 50 Hz; 360 VA
Air—90-100 psi [6.21-6.89 bar], 22 scfm [0.01038 m^3/s]

For more information, request Catalog **82221 (Magnet Wire Terminals—AMPLIVAR and MAG-MATE)**, Catalog **82275 [Crimp Quality Monitor (CQM)].**

AMP-O-LECTRIC Model "G" Terminating Machines, 354500-1, -9, -11

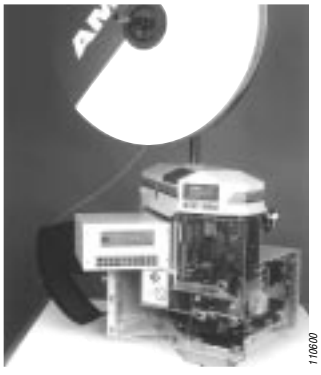

Semiautomatic bench machines for crimping reeled terminals and contacts, featuring a quiet and reliable direct motor drive, microprocessor controls for ease of setup and operation, and guarding and lighting designed for operator convenience. All models are equipped with either manual or automatic precision adjustment of crimp height. Machine-mounted sensors are available for crimp quality monitoring using conventional miniature-style applicators.

Specifications:

Width—18.7-25.3 [475-643] depending on applicator type
Depth—21.5-28.1 [546-713] depending on applicator type
Height—20 [508]
Weight—240 lb [110 kg]
Electrical—120 or 220 VAC, 50 or 60 Hz; 310 VA
Air—90-110 psi [6.21-7.59 bar], 6 scfm [0.00282 m^3/s] when required with air-feed applicators
Wire Range—26-10 AWG [0.12-6 mm^2] solid or stranded, depending on product applied

For more information, request Catalog **65828**, Video **198116**, Catalog **82275 [Crimp Quality Monitor (CQM)]**, Video **198094.**

Products for Industrial & Commercial Applications
Dimensions are shown for reference purposes only.
Dimensions are in inches and millimeters unless otherwise specified. Values in brackets are metric equivalents.
Specifications subject to change.
Technical Support Center
1-800-522-6752
www.tycoelectronics.com

Crimp Machines

Model G Splice Terminating Machine & Applicator

Specifications:

AMP-O-LECTRIC Model "G" Thru Splice Terminator

Capacity — 5 000 lb [2 224 N] max. crimp force

Deflection — .003 [0.076] max. per 1000 lb [445 N] crimp force

Noise — 76 dB max. at 5 000 lb [2 224 N] full capacity

Weight — Approx. 240 lb [109 kg]

Height — 20 [508]

Electrical — 120/220 VAC, 50/60 Hz; Avg. 2.6 A at 120 VAC when used as a bench-top unit at 2 000 cycles per hour operating rate

Air — 90-110 psi [6.21-7.58 bar], 6 scfm [0.00283 m^3/s] (when required for use with air-feed applicators)

For more information, order Catalog 889021.



AMP-O-LECTRIC Model "G" Splice Terminating Machine
Semiautomatic bench machine for crimping reeled splice product. Accepts Standard G Splice Applicators to maximize access to both sides of the splice product. Features a quiet and reliable motor drive, microprocessor controls for ease of setup and operation and guarding and lighting designed for operator convenience. The terminators are provided with manual precision crimp height adjust as standard and machine-mounted sensors are available for crimp quality monitoring. Will not accept Heavy Duty Mini style applicators



Standard G Splice Applicator
Two-piece applicator for crimping end- or side-feed reeled splice products. Applicator provides access to both sides of splice for increased ease of use and productivity. Applicators use an air feed mechanism and are available for the AMP-O-LECTRIC Model G splice terminator only.

Entry Level Terminator (ELT), 1338600-1, -2, -3, -4 ,-5, -6

Specifications:

Width—16.8 [427]

Depth—20.6 [523]

Height—20 [510] without reel support

Weight—approx. 150 lb [68 kg]

Electrical—100-240 VAC, 50/60 Hz, 6A *(Note: Avg <1 A at 120 VAC when used as a bench-top unit at 2,000 cycles per hour operating rate)*

Air—90-100 psi [6.21-6.90 bar], 6 scfm [0.00282 m^3/s] when required for use with air-feed applicators *(Note: Optional Air Feed Valve Assembly Required)*

Wire Range—Up to 14 AWG [2.5 mm^2]

For more information, request catalog **1308382**.



Semiautomatic Bench Terminator for side- and end-feed reeled terminals and contacts. The ELT uses a DC motor with gear box drive. The result is a small-footprint design that is fast and quiet. Cycle time is less than 0.400 seconds with an operation sound level of 76dBA. With a crimp force capacity of 3,000 pounds, the ELT is available for all but the highest crimp force applications. A wide range of optional equipment is also available to meet your specific application requirements.

Products for Industrial & Commercial Applications
Dimensions are shown for reference purposes only.
Dimensions are in inches and millimeters unless otherwise specified. Values in brackets are metric equivalents.
Specifications subject to change.
Technical Support Center
1-800-522-6752
www.tycoelectronics.com

Crimp Machines

AMP-O-LECTRIC Model "K" Terminating Machine, 1-471273-3

Specifications:

Width—21 [533]
Depth—20 [508]
Height—24 [610] without reel
Weight—230 lb [104 kg]
Electrical—120 VAC, 60 Hz, 6 A
Air—90-110 psi [6.21-7.59 bar], 6 scfm [0.00282 m^3/s] when required with air-feed applicators
Wire Range—26-10 AWG [0.12-6 mm^2] solid or stranded, depending on product applied

For more information, contact Tyco Electronics.


81169

Semiautomatic bench machine for use with standard-style applicators. It is an electrically-powered, clutched, flywheel-energy-style machine, equipped with a mechanical strip feed mechanism. Products commonly applied with this machine include AMP splices, AMPLIVAR splices, and FASTON flag receptacles.

AMP-TAPETRONIC Machines, 68250-1, 69875

Specifications:

Width—16 [406]
Depth—20 [508]
Height—24 [610] without reel
Weight—250 lb [113 kg]
Electrical—120 VAC, 60 Hz
Wire Range—12-4 AWG [3-21 mm^2] (68250-1), 26-10 AWG [0.12-6 mm^2] (69875), solid or stranded, depending on product applied

For more information, contact Tyco Electronics.

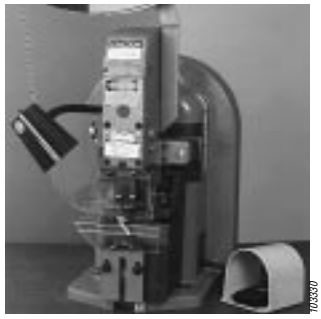
103330

AMP-O-LECTRIC Model "K" Terminating Machines with a permanently-mounted applicator that accepts interchangeable die sets to apply a variety of tape-mounted terminals and splices. Many of the die sets can also be used in AMP-O-LECTRIC Terminating Machines with a tape applicator.

Carbon Brush Machine, 459248-2

Specifications:

Width—27 [686]
Depth—27 [686]
Height—28 [711] without reel
Weight—250 lb [113 kg]
Electrical—120 VAC, 60 Hz, 6 A
Air—80-100 psi [5.51-6.89 bar]

For more information, request Catalog **82227 (Machine Applied Terminations, Open Barrel)**.


27909

Modified AMP-O-LECTRIC Model "K" Machine for crimping various terminals to spring and brush assemblies used in motors. It is equipped with a mechanism that compresses the spring, and pulls the shunt wire through the spring and over the terminal. The machine is capable of producing in the range of 400 assemblies per hour, depending on brush dimensions and operator dexterity.

Products for Industrial & Commercial Applications
Dimensions are shown for reference purposes only.
Dimensions are in inches and millimeters unless otherwise specified. Values in brackets are metric equivalents.
Specifications subject to change.
Technical Support Center
1-800-522-6752
www.tycoelectronics.com

Crimp Machines

Pneumatic Tool for Semi-Rigid Cable Terminations, 58318-1

Specifications:

Width—4.12 [105]
Depth—6.25 [159]
Height—5.12 [130]
Weight—8 lb [3.6 kg]
Air—80-100 psi [5.51-6.89 bar]

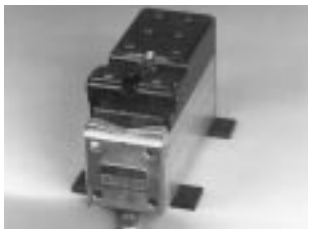

37316

For more information, request Instruction Sheet **408-9351**.

Compact, air-powered, semiautomatic bench tool for crimping N, SMA, and TNC connectors onto semi-rigid coaxial cable. Interchangeable locators are included; interchangeable die sets are purchased separately. The tool is operated with a trigger switch mounted on the front of the tool.

Lead Makers

AMPOMATOR CLS IV+ Lead-Making Machines, 356500-1, -2, 1213400-1, -2

Specifications:

Width—159 [4 040]
Depth—68 [1 730]
Height—86 [2 185] with 24 [610] dia. reel
Weight—2 000 lb [907 kg]
Electrical—220 VAC, 50 or 60 Hz, single phase, 25 A, with neutral and ground
Air—90 psi [6.21 bar], 15 scfm [0.0071 m^3/s] sustained
Wire Range—26-10 AWG [0.12-6 mm^2] stranded, 26-16 AWG [0.12-1.4 mm^2] solid
Lead Lengths—3-90 [76.2-2 285], 90-1 000 [2 285-25 400] with long lead conveyors



110234-3

For more information, request Catalog **124324**, Video **198142** (NTSC), **199609** (PAL).

Fully-automatic machines that measure, cut, strip and terminate single leads. Microprocessor-controlled, and programmed and operated using an easy-to-follow, menu-driven touchscreen. Features include direct-drive terminating units with precision crimp height adjustment, fully programmable setups, wire runout and splice detection, and motorized pre-feed with wire straightener. Crimp quality monitoring is also available.

Gamma 311 Lead-Making Machine, 2-528324-0

Specifications:

Length—839 [2131]
Width—340 [869]
Height—693 [1760]
Length Range—2.36 in.-32.8 ft. [60mm-10m] Optionally from 0.79 in. [20 mm]
Wire Cross-Sections—30 - 13 AWG [0.05 mm^2 - 2.5 mm^2], (Optionally AWG 32)
Noise Level—<76 dB (excluding pressing)
Electrical—100 - 270 V, 50-60 Hz single phase, 2.5kVA
Pneumatic Connection—5-6 bar
Air Consumption—6 m^3/h
Weight—900 lb [410 kg] with two crimping presses

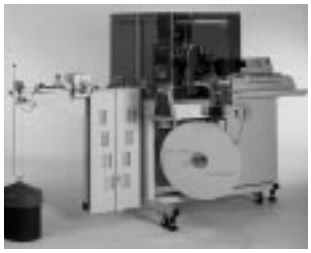

For more information, request Catalog **1307780**.

The Gamma 311 is a compact, robust fully-automatic crimping machine of the highest quality. Its accessibility and user-friendliness are just as noteworthy as its excellent price to performance ratio. The Gamma 311 is extremely flexible. It handles a variety of applications from cutting, stripping and crimping, to twisting, fluxing, tinning and doubling.

Products for Industrial & Commercial Applications
Dimensions are shown for reference purposes only.
Dimensions are in inches and millimeters unless otherwise specified. Values in brackets are metric equivalents.
Specifications subject to change.
Technical Support Center
1-800-522-6752
www.tycoelectronics.com

Lead Makers

Gamma 333 PC Lead-Making Machine, Three Stations, 2-528324-0

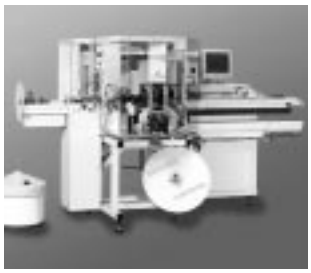

With its capacity to accommodate an additional processing station on side 1, the Gamma 333 PC can perform a number of new processes. It can produce two-ended crimp leads, process double crimp connections with three different terminals or apply seals on one end of the wire. Tinning and ink jet marking are two further options. Process monitoring is integrated into the system, ensuring perfect trimming and stripping of the wires.

Specifications:

Length—125 [3137]
Width—54.2 [1377]
Height—70.5 [1790]
Length Range— 2.36 in-32.8 ft [60-10,000] (optional 30mm)
Cross-Section Range — AWG 26-AWG 10 [0.125mm^2-5mm^2]
Noise Level—<76dB (without crimping modules)
Electgrical—3x208 - 480V, 50-60Hz; 6kVA
Compressed Air—5-6 bar
Air Consumption—6.5m^3/h
Weight—1850 lbs [840 kg] with two crimping modules

For more information, request Catalog **1307901**.

Alpha 433-S Lead-Making Machine, 3-528317-1

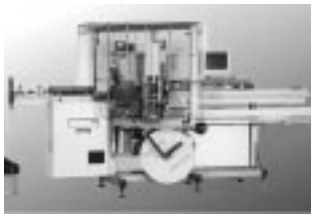

The Alpha 433 offers the highest degree of flexibility. One or two sided seal application, different contacts plus double-crimp connections of varied lengths and with the same wire can all be processed with ease. When used in combination with the MCI peripherals, the Alpha 433 becomes a very compact total system with optimum accessibility.

Specifications:

Length—125 [3823]
Width—54.2 [1698]
Height—78.8 [2000]
Length Range—2.36 in.-32.8 ft. [60mm-10m] Optionally from 0.79 in. [20 mm]
Stripping Lengths—0.1-15mm
Wire cross sections—AWG 24-AWG 10[0.20mm^2-6mm^2]
Noise Level—<75dB (without crimping module)
Electrical—3x208-480 V/50-60Hz, 10kVA
Compressed Air—5-6 bar
Air Consumption—9m^3/h
Weight—2380 lb [1080 kg] (with two MCI 711s and two MCI 761s)

For more information, request Catalog **1307801**

Products for Industrial & Commercial Applications
Dimensions are shown for reference purposes only.
Dimensions are in inches and millimeters unless otherwise specified. Values in brackets are metric equivalents.
Specifications subject to change.
Technical Support Center
1-800-522-6752
www.tycoelectronics.com

Applicators for End-Feed Products

End-Feed Heavy-Duty Miniature Applicators (coded HDM)

For more information, request Instruction Sheet **408-8039**.


89831

Interchangeable applicators for crimping products reeled end-to-end (primarily open-barrel terminals). Used in bench and lead-making machines; most designs can be used, or adapted for use with minor tooling changes, dial-in settings for different wire sizes and insulation diameters. Mechanical or air-powered feed systems, depending on the product applied.

End-Feed Standard Applicators (coded STD)

For more information, request Instruction Sheets **408-8014, 408-8011 (Hinge Bar)**.


106197

Applicators for use with AMP-O-LECTRIC Model "K" Terminating Machine, 1-471273-3. Consist of separate ram and lower tooling assemblies. Lower tooling is bolted to the machine, and can be adjusted to vary the wire crimp height. Mechanical or air-powered feed systems, depending on the product. To crimp Tab-Lok FASTON Flag terminals, the base plate is spring loaded (hinge bar).

Applicators for Side-Feed Products

Side-Feed Heavy-Duty Miniature Applicators (coded HDM)

For more information, request Instruction Sheet **408-8040**.


89828

Interchangeable applicators for crimping products reeled side-by-side on single or dual carrier strips (primarily closed-barrel terminals and open-barrel contacts). Similar design as the end-feed version. All side-feed applicators include a wire stop to help correctly position the wire end in the crimping target area.

Side-Feed Standard Applicators (coded STD)

For more information, request Instruction Sheet **408-8012**.


89826

Applicators for use with AMP-O-LECTRIC Model "K" Terminating Machine, 1-471273-3. Similar design as the end-feed version. All side-feed applicators include a wire stop to help correctly position the wire end in the crimping target area.

Stripper-Crimper Applicators (coded SCA)

For more information, request Catalog **65004 (AMP-O-MATIC Stripper-Crimper Machines)**, Catalog **82275 [Crimp Quality Monitor (CQM)]**.

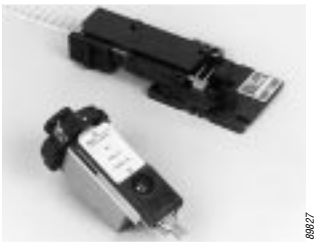
89827

Interchangeable applicators for crimping products in AMP-O-MATIC Stripper-Crimper Machines. Consist of separate ram and lower tooling assemblies. Similar dial-in settings for different wire sizes and insulation diameters as HDM applicators. Available with sensors for use with the Crimp Quality Monitor.

Products for Industrial & Commercial Applications
Dimensions are shown for reference purposes only.
Dimensions are in inches and millimeters unless otherwise specified. Values in brackets are metric equivalents.
Specifications subject to change.
Technical Support Center
1-800-522-6752
www.tycoelectronics.com

Applicators for Side-Feed Products

Tape Applicators, 567200-2, -3, -4

For more information, request Instruction Sheet **408-8082**.

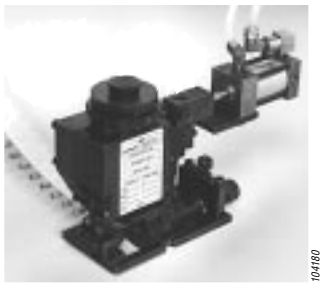

Miniature-style applicators that accept interchangeable die sets for crimping a variety of tape-mounted terminals and splices, including PIDG, PLASTI-GRIP and SOLISTRAND. The same die sets can also be used in the AMP-TAPETRONIC Machine. The feed mechanism is air powered.

Stripper-Crimper Machines

AMP-O-MATIC Stripper-Crimper Machines, 1320895-1, -2

Specifications:

Width—14 [355]
Depth—18 [457]
Height—33 [838] without reel
Weight—150 lb [68 kg]
Electrical—120 VAC, 50 or 60 Hz, .5 A
Air—80-100 psi [5.52-6.90 bar], 3.5 scfm [0.00165 m^3/s]
Wire Range—32-14 AWG [0.03-2 mm^2]

For more information, request Catalog **65004**, Video **198075,** Catalog **82275 [Crimp Quality Monitor (CQM)],** Video **198094.**

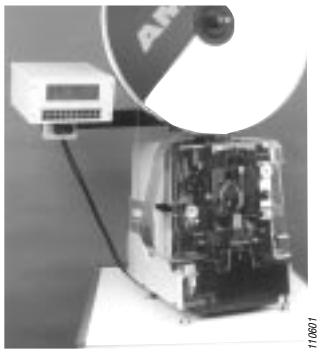

Semiautomatic bench crimping machines that also strip the wire, and are therefore used for terminating jacketed cable. Feature manual precision adjustment of crimp height, keyed strip blades for faster, more accurate setups, and an efficient scrap removal system. All adjustments can be made from the front of the machines without special tools. Available with crimp quality monitoring.

AMP-TAPEMATIC 4/8 Indent Stripper-Crimper Machine, 599406-7

Specifications:

Width—12.5 [317]
Depth—12.5 [317]
Height—10 [254] without reel
Weight—45 lb [20 kg]
Electrical—120 VAC, 60 Hz, 1.3 A
Wire Range—28-20 AWG [0.08-0.5 mm^2]

For more information, contact Tyco Electronics



Portable bench machine that strips wire and crimps tape-mounted, closed-barrel pin and socket contacts for AMPLIMITE Military, ARINC and CPC connectors. The stripping and crimping heads are accessible through separate openings in the front of the machine. Wire strip length and crimp height are adjustable. The stripping head is pre-set to the proper cutting depth of four standard wire sizes.

Products for Industrial & Commercial Applications
Dimensions are shown for reference purposes only.
Dimensions are in inches and millimeters unless otherwise specified. Values in brackets are metric equivalents.
Specifications subject to change.
Technical Support Center
1-800-522-6752
www.tycoelectronics.com

Dedicated Hand Tools

CERTI-CRIMP Double Action Hand Tools (DAHT)

For more information, request Catalog **65780**.



Premium grade hand tools. Feature ratchet control to provide complete crimp cycle. Die sets close in an arc-like path. When applicable, user assist features, such as a contact or terminal locator and a wire stop are included. Approximate weight 1.2 lb [0.54 kg]

CERTI-CRIMP Heavy Head Hand Tools (HHHT)

For more information, request Catalog **65780**.



Premium grade hand tools for crimping large coaxial connectors and various types of terminals and splices on wires ranging 6-24 AWG [13-0.2 mm^2]. Feature ratchet control to provide complete crimp cycle, and insulation crimp adjustment on tools for

AMPLI-BOND, PIDG, DIAMOND GRIP, and PLASTI-GRIP terminals and splices. Die sets close in a straight line. Approximate weight 2.1 lb [0.95 kg]

CERTI-CRIMP Straight Action, Double Action Hand Tools (SADAHT)

For more information, request Catalog **65780**.



Premium grade hand tools. Feature ratchet control to provide complete crimp cycle. Die sets close in a straight line. Include a contact locator and support. Same handle and ratchet design as DAHT. Approximate weight 1.5 lb [0.68 kg]

CERTI-CRIMP Straight Action Hand Tools (SAHT)

For more information, request Catalog **65780**.



Premium grade hand tools. Feature ratchet control to provide complete crimp cycle. Die sets close in a straight line. Include a contact locator and wire stop, plus an insulation crimp adjustment lever, when applicable. Approximate weight 1.3 lb [0.59 kg]

CERTI-CRIMP T-HEAD Hand Tools

For more information, request Catalog **65780**.



Premium grade hand tools for crimping PIDG and PLASTI-GRIP terminals and splices, plus spare wire caps. Feature ratchet control to provide complete crimp cycle. Die sets close in a straight line. Include a locator and a quick take-up for holding the terminal or splice in place.

Approximate weight 1.3 lb [0.59 kg]

Products for Industrial & Commercial Applications
Dimensions are shown for reference purposes only.
Dimensions are in inches and millimeters unless otherwise specified. Values in brackets are metric equivalents.
Specifications subject to change.
Technical Support Center
1-800-522-6752
www.tycoelectronics.com

Dedicated Hand Tools

ROTA-CRIMP Hand Tools, 600850-1, 601075-1

Specifications:

600850:

Length—25 [635]

Weight—7.4 lb [3.4 kg]

Wire Range—8-4/0 AWG [7-100 mm²]

601075:

Length—15 [381]

Weight—4.6 lb [2.1 kg]

Wire Range—8-1/0 AWG [7-60 mm²]

For more information, request Catalog **1242066**.



Premium grade hand tools for crimping large SOLISTRAND and tubular terminals and splices, and CABLE MAKER battery terminals. The die sets rotate to provide multiple crimping configurations for the different terminal and splice sizes. 600850-1 and BANTAM ROTA-CRIMP tool, 601075-1 are equipped with ratchet control to provide complete crimp cycle.

TETRA-CRIMP Hand Tool, 59824-1

For more information, request Catalog **65780,** Instruction Sheet **408-2823**.



Premium grade hand tool for crimping PIDG, PLASTI-BOND, and PLASTI-GRIP terminals, PIDG butt splices, and PIDG FASTON terminals onto wires ranging 22-10 AWG [0.3-6 mm²]. Features ratchet control to provide complete crimp cycle, quick ratchet release, and terminal locator and wire stop. Die set has three color-coded crimping chambers. Approximate weight 1.4 lb [0.64 kg]

Special Tool Sets

End- and Side-Feed Heavy-Duty Miniature Applicators for Ultra-Pod FASTON Receptacles

For more information, request Instruction Sheets **408-8095 (Side Feed), 408-8099 (End Feed)**.



Air-feed applicators for crimping uninsulated receptacles, and assembling them into insulating housing. The receptacles and housings are provided partially assembled, with the crimp barrels extending outside the housings. The receptacles are crimped on the downward stroke of the machine, and assembled on the upward stroke. Straight receptacles are side fed; flag receptacles are end fed.

Products for Industrial & Commercial Applications
Dimensions are shown for reference purposes only.
Dimensions are in inches and millimeters unless otherwise specified. Values in brackets are metric equivalents.
Specifications subject to change.
Technical Support Center
1-800-522-6752
www.tycoelectronics.com

Hand Tools for IDC Products

AMP-BARREL Terminal Wire Insertion Tools, 552714-1 thru -5

For more information, request Catalog **82159 (Printed Circuit Board Terminals and Disconnects),** Instruction Sheet **408-6553**.



Service grade hand tools for inserting one or two unstripped wires into pc board-mounted AMP-BARREL terminals. The tips of the tools are slotted to a depth to prevent wire overinsertion. The shanks of the tools are color coded. For improved comfort, a slip-on cushion grip, 231279-1, is available.

AMP-LATCH Hand Tool Kit, 768340-1

For more information, request Instruction Sheet **408-9828**.



103177

Terminating kit for .050 [1.27] centerline ribbon cable with 28 or 26 AWG [0.08 or 0.15 mm^2] stranded or solid, or 30 AWG [0.05 mm^2] solid conductors. Includes commercial grade hand tool with ratchet control for complete termination cycle, base assembly, bench-mount, tooling sets for standard and novo receptacles, card edge connectors and D-Sub HDF low-profile connectors, and a carrying case.

CHAMP MI-1 "Butterfly" Hand Tools, 229378-1, -3, -20, -23

For more information, request Catalog **82008 (Miniature Ribbon Connector System)**, Instruction Sheet **408-7559**.



90722

Portable tool for applying 14-, 24-, 36-, and 50-position CHAMP connectors, including Category 5. Mass terminates and shears all wires in a single operation. Wires can be laced in the tool or in a separate lacing fixture, 230328-1, using color bar guides. Lacing fixture allows 180° as well as 90° wire dress. Approximate weight (including carrying case) 8.3 lb [3.8 kg]

CHAMP Palm Grip Inserter and Index Slide Kit, 229764-2

For more information, request Catalog **82008 (Miniature Ribbon Connector System)**.



Kit includes index slides for 14-, 24-, 36-, 50-, and 64-position connectors, cable clamp, hex wrench for ratchet release, contact insertion/extraction tool and carrying case. Palm grip inserter features ratchet control that will not release the pusher until it is bottomed, and an excess wire trimmer. Connectors are mounted in the slides, and indexed by hand in the inserter.

"Chordal" Modular Plug Hand Tools, 231648-1, 231649-1

For more information, request Catalog **82066 (Modular Interconnection System)**.



74011A

Molded plastic service grade hand tools. Feature preset, non-replaceable cable jacket stripper and color-coded die set. Dies close in a straight line. 231648-1 applies 2-, 4-, and 6-position line plugs; 231649-1 applies 4-position handset plugs.

Products for Industrial & Commercial Applications
Dimensions are shown for reference purposes only.
Dimensions are in inches and millimeters unless otherwise specified. Values in brackets are metric equivalents.
Specifications subject to change.
Technical Support Center
1-800-522-6752
www.tycoelectronics.com

Hand Tools for IDC Products

Professional Modular Plug Hand Tools, 231652 Series

For more information, request Catalog **82066 (Modular Interconnection System)**.



Premium grade hand tools. Feature ratchet control to provide complete termination cycle, and quick ratchet release. Include interchangeable die set, with color dot code on nest and indenter, that closes in a straight line. Also has a flat-oval cable cutter and stripper. Approximate weight .75 lb [0.3 kg].

Pistol Grip Hand Tool System

For more information, request Catalog **296176**.



Lightweight and easy-to-use hand tool for IDC connectors, featuring ratchet control that will not release the trigger until wire reaches proper insertion depth. Accepts interchangeable terminating heads that may also be used with bench-mounted power units, 58338-1 and 931800-1. Most heads automatically index to the next contact position, or the connector may be advanced by hand to any position.

T-Handle Hand Tools, 59803-1, 59804-1, 59839-1, 91287-1, 229384-1

For more information, request Instruction Sheets **408-7558 (CHAMP), 408-7907 (MTA), 408-9481 (HDE)**.



Service grade hand tools for inserting individual wires into various IDC connectors when making repairs: MTA-100, 59803-1; MTA-156, 59804-1; MTA-156 Card Edge, 59839-1; AMPLIMITE HDE, 91287-1; CHAMP, 229384-1.

Bench Machines for IDC Products

2 700-lb Pneumatic Power Units, 312522-1, -2, -3, -4

Specifications:

Width—8 [203]
Depth—13.7 [349]
Height—23.5 [596]
Weight—50 lb [22.7 kg]
Air—80-100 psi [5.51-6.89 bar]

For more information, contact Tyco Electronics.



Bench machines for notching and terminating ribbon cable with MTA connectors, applying SDL plugs, and crimping shielding ferrules. Tooling is mounted to the ram and base plate of the frame. 312522-1 and -4 are foot actuated; -2 is pushbutton actuated, -3 is bleed-sensor actuated for use with slide tooling. Stroke distance can be adjusted on -1, -2, and -3 machines.

Manual Arbor Frame Assembly, 91085-2

Specifications:

Width—7.6 [194]
Depth—14.2 [362]
Height—10 [254]
Weight—13 lb [5.9 kg]

For more information, request Instruction Sheet **408-7777**.



Bench frame for applying a variety of IDC connectors, including AMPMODU MT, AMP-LATCH, and CHAMP. Features adjustable ram and handle, and a slide base. Tooling is mounted to the ram and into the tracks of the base plate.

Products for Industrial & Commercial Applications
Dimensions are shown for reference purposes only.
Dimensions are in inches and millimeters unless otherwise specified. Values in brackets are metric equivalents.
Specifications subject to change.
Technical Support Center
1-800-522-6752
www.tycoelectronics.com

Bench Machines for IDC Products

Modular Plug Dual Terminators, 1320840-1



Specifications:

Width—8 [203]
Depth—16.7 [425]
Height—20.5 [521]
Weight—62 lb [28 kg] (Terminator and Module)
Electrical—120 VAC, 60 Hz (856195-1); 220 VAC, 50 Hz (856195-6)
Air—80-100 psi [5.51-6.89 bar]

For more information, request Instruction Sheet **408-9743**.

Air-powered bench machines for simultaneously terminating both ends of flat-oval and round telephone cable with modular plugs. Also tests the assemblies when terminated for opens and shorts. Accepts interchangeable modules, 856196 series, for different size or style plugs. Tester can be set to test specific plug sizes and contact configurations.

Modular Plug Single Terminators, 354711 Series



Specifications:

Width—3.5 [89]
Depth—8.7 [221]
Height—12.5 [317]
Weight—7.2 lb [3.3 kg]
Air—80-100 psi [5.51-6.89 bar]

For more information, request Instruction Sheet **408-9919**.

Compact, lightweight, air-powered bench machines for applying modular plugs. Accepts interchangeable tooling kits, 354714 series, for different size or style plugs. Tooling kits may be ordered separately, or included with the machines. Contact insertion height is easily adjustable. Actuated by a foot valve.

Pneumatic Auto-Cycle Unit, 91112-3



Specifications:

Width—7 [179]
Depth—19 [483]
Height—13 [330]
Weight—34 lb [15.4 kg]
Air—80-100 psi [5.51-6.89 bar]

For more information, request Instruction Sheet **408-6732**.

Basically an air-powered version of Manual Arbor Frame Assembly, 91085-2. Features adjustable ram and cycle time, and automatic cycling when the lower assembly is slid into the frame to the rear of the base plate. Includes a guard around the frame opening.

Harness Board Tools

MTA Harness Board Manual Pistol Grip Hand Tools, 58645-1, 58647-1



For more information, request Catalog **296501.**

Lightweight hand tools for terminating wire harnesses with MTA-100 and -156 feed-through connectors. Tools mass terminate discrete wires or notched ribbon cable in small connectors (2 to 12 contacts for MTA-100, and 2 to 8 contacts for MTA-156). Termi-nating heads offer threaded mounting holes in their base for fastening to harness boards. Heads are mounted in the Manual Pistol Grip Handle Assembly, 58074-1, or Pneumatic Handle Assembly, 58075-1.

Products for Industrial & Commercial Applications
Dimensions are shown for reference purposes only.
Dimensions are in inches and millimeters unless otherwise specified. Values in brackets are metric equivalents.
Specifications subject to change.
Technical Support Center
1-800-522-6752
www.tycoelectronics.com

Harness Board Tools

MTA Harness Board Pneumatic Hand Tools, 58575-1, 58576-1



Lightweight hand tools for terminating wire harnesses with MTA connectors: 58575-1 for MTA-100; 58576-1 for MTA-156. Used with board-mounted fixtures for holding the connectors and lacing the wires. Feature an applicator that rotates 360° to easily align with the fixtures, and engages and disengages the fixtures automatically. Insertion depth is adjustable.

Specifications:

Weight—2.8 lb [1.3 kg] (58575-1)
Air—75-95 psi [5.17-6.55 bar]

For more information, request Catalog **296501.**

Semiautomatic Machines for Discrete Wire

Electric Discrete Wire Machines, 58020-1, -2, -4, -5



Bench machines for terminating wires one-at-a-time with AMPLIMITE HDE D-Sub and AMPMODU MT connectors with insulation displacement contacts. Feature a feed mechanism that automatically indexes the connector to the next position after each termination. The connector may also be advanced without cycling the machine. Insertion depth is adjustable. Actuated by a foot switch.

Specifications:

Width—5 [128]
Depth—13.5 [343]
Height—10 [254]
Weight—22 lb [10 kg]
Electrical—120 VAC, 60 Hz (58020-1); 220 VAC, 50 Hz (58020-4)

For more information, contact Tyco Electronics.

Electric Power Unit, 931800-1



Lightweight bench machine for use with the same interchangeable terminating heads used with Pistol Grip Hand Tool, 58074-1. Also accepts heads with either loose-piece or tape feed tracks for applying MTA connectors, and a head with a tube feed track and seating station for applying AMPMODU MTE connectors. Actuated by a foot switch.

Specifications:

Width—7 [178]
Depth—14 [356]
Height—10 [254]
Weight—12 lb [5.4 kg]
Electrical—120 VAC, 60 Hz, 2 A

For more information, request Catalog **296176 (Pistol Grip Hand Tool System)**.

Semiautomatic Machines for Ribbon Cable

MTE Ribbon Cable Terminator, 856002-1

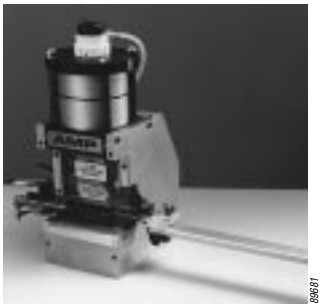

Air-operated bench machine for mass terminating notched ribbon cable with AMPMODU MTE connectors. Connectors are fed through their packaging tube into the terminating station by a spring-loaded pusher tape. Contacts are inserted into the connector housing in a manually-operated seating station alongside the terminating station. Insertion depth is adjustable. Actuated by a foot valve.

Specifications:

Width—43 [1 092]
Depth—10 [254]
Height—21 [533]
Weight—60 lb [27.2 kg]
Air—80 psi [5.51 bar] min., .5 scfm [0.00024 m^3/s]
Cable Range—30-22 AWG [0.05-0.4 mm^2], .100 [25.4] centerlines

For more information, contact Tyco Electronics.

Products for Industrial & Commercial Applications
Dimensions are shown for reference purposes only.
Dimensions are in inches and millimeters unless otherwise specified. Values in brackets are metric equivalents.
Specifications subject to change.
Technical Support Center
1-800-522-6752
www.tycoelectronics.com

Semiautomatic Machines for Jacketed Cable

CHAMPOMATOR 2.5 Terminating Machines, 354786 Series, plus Controllers, 852423-1, -3


99338-2

Compact bench machines for terminating multi-conductor, jacketed cable with a variety of IDC connectors. Microprocessor controlled, and programmed using a membrane-switch keyboard. Automatically index the connector through the programmed termination pattern. Terminate either a pair of wires simultaneously in opposite contacts, or just one wire at a time.

Specifications:

Machines:

Width—24 [610]

Depth—24 [610]

Height—12 [305]

Weight—75 lb [34 kg]

Air—80 psi [5.52 bar] min., .75 scfm [0.00035 m^3/s]

Controllers:

Width—11 [286]

Depth—17 [438]

Height—6 [152]

Weight—21 lb [9.5 kg]

Electrical—120 VAC, 60 Hz (852423-1); 220 VAC, 50 Hz (852423-3); 480 VA

For more information, request Catalog **82247,** Video **198043**.

CHAMPOMATOR 2.6 Terminating Machine, 662300-1, plus Controllers, 852423-4, -5

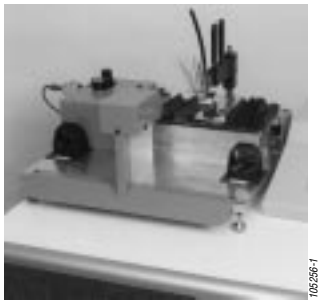
105256-1

Terminates 30 AWG [0.06 mm^2], .024 [0.61] maximum insulation diameter wires in the IDC contacts of 68-position 0.8 mm Offset CHAMP plugs. It uses a process similar to the Model 2.5 machine for wire handling. The Model 2.6 bench machine comes complete with a mandrel assembly, connector nest, and inserter package. A 180° cable clamp is provided with the machine.

Specifications:

Machine:

Width—16 [400]

Depth—21 [530]

Height—10 [250]

Weight—75 lb [35 kg]

Electrical—120 VAC, 60 Hz, 4 A

Air—80 psi [5.52 bar] at 1.13 scfm [0.000533 m^3/s]

Controllers:

Width—11 [285]

Depth—17 [440]

Height—6 [150]

Weight—21 lb [9 kg]

Electrical—120 VAC, 60 Hz (852423-4); 230 VAC, 50 Hz (852423-5); 480 VA

For more information, request Catalog **82247**.

Products for Industrial & Commercial Applications
Dimensions are shown for reference purposes only.
Dimensions are in inches and millimeters unless otherwise specified. Values in brackets are metric equivalents.
Specifications subject to change.
Technical Support Center
1-800-522-6752
www.tycoelectronics.com

Automatic Machines for Ribbon Cable

R-CAM 2A Ribbon Cable Assembly Machine, 760700-6, -7

Specifications:

Width—102 [2 591]
Depth—58 [1 473]
Height—60 [1 524]
Weight—960 lb [435 kg]
Electrical—120 VAC, 50 or 60 Hz (760700-6); 220 VAC, 50 or 60 Hz (760700-7); 1 800 VA



Air—80 psi [5.52 bar] min., 8 scfm [0.00378 m^3/s] min.

For more information, request Catalog **296060**.

Fully-automatic machines for producing and testing .050 [1.27]-centerline ribbon cable assemblies up to 48 [1 219] long with up to four connectors in any orientation. Supplied with tooling to apply AMP-LATCH 20-64 position card-edge connectors and novo receptacles. Other tooling may be ordered separately. Microprocessor controlled, and programmed and operated using an interactive touchscreen.

R-CAM 3A Ribbon Cable Assembly Machines, 761900-1, -2

Specifications:

Width—48 [1 219]
Depth—48 [1 219]
Height—62 [1 575]
Weight—630 lb [286 kg]
Electrical—120 VAC, 50 or 60 Hz (761900-1); 220 VAC, 50 or 60 Hz (761900-2); 1 800 VA
Air—80 psi [5.52 bar] min., 8 scfm [0.00378 m^3/s] min.



Production Rate—1 075 assemblies/hr (2 connectors, 4 [102] length

For more information, request Catalog **296060,** Video **198056**.

High-speed models for producing and testing .050 [1.27]-centerline jumpers up to 105 [2 667] long with one or two connectors. It can also produce two-connector assemblies with up to 50 [1 270] long unterminated tails. Controlled, programmed and operated similar to the R-CAM 2A machines.

R-CAM 4 Ribbon Cable Assembly Machines, 318800 Series

Specifications:

Width—68 [1 727]
Depth—58 [1 473]
Height—72 [1 829]
Weight—590 lb [300 kg]
Electrical—120 or 220 VAC, 50 or 60 Hz; 1 800 VA



Air—80 psi [5.52 bar] min., 12 scfm [0.00566 m^3/s] min.

For more information, request Catalog **296060**.

Top-of-the-line models for producing and testing daisy-chained assemblies up to 100 [2 540] long with up to 10 connectors in any orientation. Longer lengths are possible with limitations. Can be converted to run either .050 [1.27]- or .025 [0.63]-centerline cable. Can also process slit-and-twist cable. Controlled, programmed and operated using either an interactive touchscreen or a keyboard.

Automatic Machines for Jacketed Cable

CHAMPOMATOR 3A Terminating Machines, 662600 Series

Specifications:

Width—60 [1 524]
Depth—24 [610]
Height—48 [1 219]
Weight—250 lb [113 kg]
Electrical—120 VAC, 50 or 60 Hz, single phase, 1A
Air—80 psi [5.52 bar] min., 10 scfm [0.00472 m^3/s] min.

For more information, request Catalog **82247,** Video **198026**.



Automatic terminating machines for AMPLIMITE HDE, AMPMODU Level V and CHAMP connectors. Microprocessor controlled, and programmed and operated using an interactive touchscreen.

Terminate wires at random or selectively by identifying each wire by checking continuity with the terminated opposite end. Also test for shorts. Cable clamps available for 90° and 180° wire dress.

Products for Industrial & Commercial Applications
Dimensions are shown for reference purposes only.
Dimensions are in inches and millimeters unless otherwise specified. Values in brackets are metric equivalents.
Specifications subject to change.
Technical Support Center
1-800-522-6752
www.tycoelectronics.com

Connector Insertion Devices

SM-3, 814700-2

Specifications:

Width—35.5 [902]
Depth—23 [584]
Height—26.5 [673]
Weight—290 lb [132 kg]
Capacity—6 000 lb [26 700 N]
Air—80 psi [5.52 bar] min., 1.5 scfm [0.00071 m³/s] min.

For more information, contact Tyco Electronics.



Compact, air-powered bench machine for seating preassembled ACTION PIN connectors with up to a total of 150 contacts. Seating tools may be required depending on connector styles. It can accommodate pc boards up to 20 [508] wide. Machine cycling is operator controlled in conjunction with either pressure or board sensing to compensate for board thickness variations. Cycling time is 4 seconds.

Connector Seating Machine BMEP-3T, 1399400-1, BMEP-5T, 1399401-1

For more information, contact Tyco Electronics.



This cost effective bench mounted machine is used for semi-automatic pressing of ACTION PIN (Compliant Pin, Pressfit) connectors into printed circuit boards. A PC controls the machine, and the pressing force is delivered by an all-electric servomotor, providing precise control of force, speed, and seating height. The touch screen monitor provides a user-friendly interface. The bar code scanner provides PCB serial number input for product tracking. The pressing process is data driven, and setup is fully-automatic. Press quality monitoring includes minimum force, maximum force, and seated height. The automatic setup and quality monitor virtually eliminates human error and product related defects.

Connector Seating Machine MEP-6T, 1399500-1, MEP-12T, 1299501-1

For more information, contact Tyco Electronics.



Machine is used for semi-automatic pressing of ACTION PIN (Compliant Pin, Pressfit) connectors into printed circuit boards. It is mounted on wheels for portability, but can be locked in place. It functions in the same fashion as the BMEP presses, but provides more pressing force and larger PCB working area. While the BMEP accommodates PCBs up to 450mm x 600mm, the MEP can process up to 900mm x 1200mm.

Connector Seating Machine AEP-12T, 1399600-1

For more information, contact Tyco Electronics.



PC controlled four-axis all electric servo press is used for fully-automatic pressing of ACTION PIN Connectors into printed circuit boards. The PC controls the functions required for pressing a large variety of connectors of a PCB without human intervention. The touch screen provides a user-friendly interface, and a barcode scanner provides PCB serial number input for product tracking. The pressing process is data driven, and setup is automatic. The AEP-12T press can be interfaced with the ACP-3648 pick and place cell for a fully-automatic assembly line.

Products for Industrial & Commercial Applications
Dimensions are shown for reference purposes only.
Dimensions are in inches and millimeters unless otherwise specified. Values in brackets are metric equivalents.
Specifications subject to change.
Technical Support Center
1-800-522-6752
www.tycoelectronics.com

Connector Insertion Devices

Connector Seating Machine ACP-3648, 1399700-1, Large Area Pick and Place with Vision Inspection

For more information, contact Tyco Electronics.



PC controlled machine used to automatically pick, inspect, and place a variety of connectors and odd form components onto PCBs (up to 900mm x 1200mm). It utilizes adjust-able width pass-through conveyor. Components are presented to the 5-axis Cartesian robot by feeders. Each component is inspected, positioned, and lightly pressed to hold position before the PCB is transferred to the AEP-12T or other machine for pressing. Functions include machine vision PCB locating, machine vision inspection of pin tips, X Y & Theta positioning, and force verified inspection.

Single Contact Insertion Devices

Comp-U-Sertor II Machines, 122300-1, -2

Specifications:

Width—58 [1 473]
Depth—66 [1 676] with reel
Height—63 [1 600]
Weight—500 lb [227 kg]
Electrical—120 VAC, 50 or 60 Hz (122300-1); 220 VAC, 50 or 60 Hz (122300-2); 1 800 VA
Air—80 psi [5.52 bar] min., 15 scfm [0.00708 m^3/s] min.
Insertable Area—12 x 18 [305 x 457] max.

For more information, request Catalog **296059**.



Microprocessor-controlled X-Y positioning table for inserting a variety of products into pc boards, including .025[2] stamped or bandoliered posts, mini-spring sockets, and FASTON tabs. Insertion heads for the different products are interchangeable, and may also be used with bench machines. Controlled, programmed and operated using an interactive touchscreen. Options include double-action clinch tooling, powered dereeler, splice run-out detector, take-up winder for paper tape, and scrap chopper.

P300 Automatic Insertion Machine

Specifications:

Width—57.5 [1 460]
Depth—64.5 [1 640]
Height—60 [1 520]
Weight—Depending on configuration
Electrical—110 V, 60 Hz
Air—87 psi [6 bar]
Insertable Area—24 x 16 [600 x 400]

For more information, contact Tyco Electronics.



Automatic machine for inserting a variety of contacts into pc boards (PCBs). Equipped with an insertion tool (comprised of a product-specific insertion head, an anvil, and a product feed mechanism). Stepper-motor driven X-Y table positions PCBs under insertion head. Surface Mount Equipment Manufacturers Association (SMEMA) compatible inline PCB Insertion Station for posts, tabs, receptacles or sockets. Stand-alone unit is field upgradeable to Pass Through. Mounts up to four AMP pneumatic insertion heads. Modem diagnostics standard, vision system optional. Control panel used to program and monitor entire insertion process.

Products for Industrial & Commercial Applications
Dimensions are shown for reference purposes only.
Dimensions are in inches and millimeters unless otherwise specified. Values in brackets are metric equivalents.
Specifications subject to change.
Technical Support Center
1-800-522-6752
www.tycoelectronics.com

Single Contact Insertion Devices

Modular Insertion System (MIS) Bench Machines, 217600 Series, 662820 Series (shown)



Specifications:

Width—18 [457]

Depth—24 [610]

Height—18 [457]

Weight—250 lb [113 kg]

Electrical—120 to 220 VAC, 50 or 60 Hz (217600); 120 or 240 VAC, 60 Hz, single phase, 120 VA (662820)

Air—80 psi [5.52 bar] min., 15 scfm [0.00708 m^3/s] min.

Insertable Area—18 x 22 [457 x 559] max.

For more information, request Catalog **296059**.

Bench machines for inserting a variety of products into pc boards. Uses the same interchangeable insertion heads as the Comp-U-Sertor II Machines. Series 217600 machines feature a manually-operated X-Y positioning fixture, plus a locator spotlight. The machine cycles when the board hole is placed on the anvil and both triggers on the dual handles attached to the X-Y fixture are depressed. Series 662820 machines, without board fixturing, cycle automatically when the hole is properly located. A stabilizing disk over the anvil helps keep the board level.

MAG-MATE Products

MAG-MATE Product Terminator (MPT-5)



Specifications:

Width—73 [1 855] max. (with two 24 [610] dia. terminal reels)

Depth—29 [740]

Height—42 [1 070]

Weight—190 lb [86 kg]

Electrical—120 VAC, 60 Hz, or 220 VAC, 50 Hz; 1A

Air—80 psi [5.52 bar] min., 3 scfm [0.00142 m^3/s] min.

For more information, request Catalog **296501, page 50.**

Dual-direction feed capable, microprocessor-controlled, semiautomatic bench machine for inserting Standard, Mini, or Slim Line MAG-MATE products. Easy-to-use push button controls for programming, with LCD display. Accepts one or two reels of different strip form products. Can also accept two reels of similar products with varying IDC wire slots. Fixturing is custom designed. Machine inserts one or two terminals at a time and trims off excess magnet wire. Also available as a module for use in automatic equipment.

Single Contact Devices for Flexible Circuits

Flexible Film Termination Machines, 224910-1, -2, -3, -4, -6



Specifications:

Width—20.5 [520]

Depth—27.5 [700]

Height—18 [460]

Weight—100 lb [45 kg]

Electrical—120 VAC, 60 Hz, (224910-1, -3, -4); 240 VAC, 50 Hz (224910-2, -6)

For more information, contact Tyco Electronics.

Semiautomatic bench machines for terminating .050 [1.27]-, .100 [2.54]-, .200 [5.08]-, and .300 [7.62]-centerline cable, circuitry and printed wiring. All positions are terminated automatically one after another. To skip positions, an optional Programmer Kit, 356484-1, is available. Crimp height is adjustable.

Products for Industrial & Commercial Applications
Dimensions are shown for reference purposes only.
Dimensions are in inches and millimeters unless otherwise specified. Values in brackets are metric equivalents.
Specifications subject to change.
Technical Support Center 1-800-522-6752 www.tycoelectronics.com

Strippers

Cable Stripper/Slitter, Model CS-1, 606700-1

For more information, request Instruction Sheet **408-9688**.



Hand tool for stripping round cable up to 1.0 [25] outside diameter (approximately 350 kcmil [175 mm^2] conductor). Uses a "V" clamp that slides in and out for cable positioning. Blade can be rotated 90° for circular or lengthwise cuts. Blade depth is also adjustable. Edge of clamp can be used to help separate cable jacket. Supplied with a spare blade.

Coaxial Cable Stripper Kits, 603995-1, -2, -3, -5, -6

For more information, request Instruction Sheet **408-2766**.



Hand tool for stripping the more popular sizes of coaxial cable. Features interchangeable, color-coded blade cassettes for different strip lengths. Kits include a specific blade cassette plus a set of four interchangeable, color-coded blocks for accommodating different cable diameters ranging from .10 [2.5] to .30 [7.6]. Blade depth is adjustable.

Semi-Rigid Cable Preparation Machine, 220211-2

Specifications:

Width—11.6 [295]
Depth—8.2 [210]
Height—6 [152]
Weight—45 lb [21 kg]
Electrical—120 VAC, 60 Hz, 2 A

For more information, contact Tyco Electronics.



Compact, semiautomatic machine for cutting and stripping the outer conductor and dielectric, and chamfering the center conductor. Interchangeable tooling, 813599-1, -2, available for preparing 402 and 405 RG/U cables, respectively, for termination with Blindmate, N, SMA, and TNC connectors.

Features a carriage for securing the cable for cutting and stripping. Cutting speed and depth is adjustable.

Automatic Cut and Strip Machine, 1214316-1

Specifications:

Width—14.6 [370]
Depth—16.1 [410]
Height—10.8 [275]
Weight—48.6 lb [23 kg]
Electrical—120 or 220 VAC, 50 or 60 Hz, 160 VA
Wire Range—32-10 AWG [0.05-6 mm^2] stranded, 32-16 AWG [0.05-1.5 mm^2] solid
Wire Lengths—.04 [1.0]-3 280 ft [1 000 m]
Strip Lengths—up to 1.77 [45]

For more information, request Catalog **1307238**.



Fully electric, microprocessor-controlled bench machine for processing wire and round and flat cable. Features LED display prompts for easy-to-follow setups and operation, automatic wire loading and unloading, and universal V-type blades. Pre-feeder and wire stacker, available for unattended operation. Process 5 200 wires per hour (22 AWG [0.3 mm^2], 4 [100] length, partial strip both ends).

Products for Industrial & Commercial Applications
Dimensions are shown for reference purposes only.
Dimensions are in inches and millimeters unless otherwise specified. Values in brackets are metric equivalents.
Specifications subject to change.
Technical Support Center
1-800-522-6752
www.tycoelectronics.com

Strippers

Semiautomatic Pneumatic Wire Stripper Machine, 1214315-1



Specifications:

Width—2.75 [70]
Depth—10.4 [265]
Height—5.32 [135]
Weight—4.4 lb [2 kg]
Air—75-105 psi [5.17-7.24 bar], .01 ft³ [.00028 m³]/operation
Wire Range—32-14 AWG [0.05-1.65 mm²]
Strip Lengths—.06-.79 [1.5-20]

For more information, request Catalog **1307238**.

Compact, lightweight, air-powered bench machine for stripping wires up to 14 AWG [1.65mm²], and cable up to .13 [3.2] OD. Features automatic sensor activation and universal V-type blades for processing varying wire sizes without changing blades. Full or partial stripping. Approx. .3 second machine cycle time for longest strip length.

Semiautomatic Electric Wire Stripper Machine, 1338083-1



Specifications:

Width—2.75 [70]
Depth—12.5 [318]
Height—5.32 [135]
Weight—5.7 lb [2.6 kg]
Electrical—100-240 VAC, 47-63 Hz
Wire Range—10-32 AWG [0.03-5.26 mm²]
Strip Lengths—.06-1.00 [1.5-25]

For more information, request Catalog **1307238**.

Bench machine for stripping wires up to 10 AWG [5.26mm²], and cable up to .28 [7] OD. Features automatic sensor activation and universal V-type blades for processing varying wire sizes without changing blades. Full or partial stripping. Approximately .3 second machine cycle time for longest strip length.

Floor-Standing Wire Prefeeder, 1214317-1



Specifications:

Wire Insulation OD — .35 [9] Max.
Reel Width — 12 [305] max. standard; 16 [405] max. with 20 [510] shaft; 18 [455] max. with 22 [560] shaft, extension kit and braking system
Reel Diameter — 20 [510] max. standard; 48 [1 220] max. with extension kit and braking system
Reel Core Diameter — .75-2.5 [19-65]
Reel Weight — 100 lb [45 kg] Max.
Feed Rates — .13-4.7 ft/s [0.04-1.44 m/s]; .20-5.6 ft/s [0.06-1.72 m/s]; .40-6.9 ft/s [0.12-2.10 m/s]
Speed Rate — 0-6.9 ft/sec (0-2 m/sec)
Width — 24 [610] standard; 36 [915] with frame extension
Depth — 21 [535]
Height — 46 [1 170] with guide arm fully extended
Weight — 125 lb [57 kg]
Electrical — 120 VAC, 60 Hz, 300 VA

Prefeeder for use with the AMPOMATOR CLS IV+ Lead-Making Machine, as well as the Automatic Cut and Strip Machine. It can feed wire from either reels or barrels. Three different ranges of feed rates can be easily selected to match the speed of the equipment being fed. For larger reels, optional reel mounting shafts, a reel holder frame extension kit, and a reel-braking system are available.

Products for Industrial & Commercial Applications
Dimensions are shown for reference purposes only.
Dimensions are in inches and millimeters unless otherwise specified. Values in brackets are metric equivalents.
Specifications subject to change.
Technical Support Center
1-800-522-6752
www.tycoelectronics.com

Strippers

Electric Bench Prefeeder, 1424100-1



Specifications:

Outer Cable Diameter — max. OD: .236 [6.0] (Guide tube clearance: .280 [7])
Outer Cable Reel Diameter — 18 [475]
Max. Cable Reel Width — 12 [305]
Max. Cable Reel Weight — 44 lbs. [20 kg]
Shaft Length — 16 [406]
Diameter Reel Center — .750-2.50 [19-65]
Speed Rate — 0-5.9 ft/sec [0-1.8 m/sec]
Depth — 16.5 [419]
Width — 18 [457]
Height — 11.8 [300]
Dancer Height — 22 [559]
Motor — 1/8 HP DC
Electrical Requirements — 100, 120, 220, 240, VAC 50-60 Hz/120 VA
Net Weight — 38 lbs [17 kg] without optional rack

The Bench Prefeeder is a perfect companion to the Automatic Cut and Strip Machine, P/N 1214316-1. This prefeeder uses a traditional dancer slide and an electronically controlled belt drive transport system. The price/performance ratio of this economical prefeeder makes it a good choice for feeding small to medium sized spools.

Kappa 225, Automatic Cut and Strip, 3-547178-0



Specifications:

Width — 22 [560]
Depth — 15.4 [390]
Height — 13.4 [340]
Weight — 79.4 lb [36 kg]
Wire Cross-Sections — Stranded wire: 30-8 AWG [0.05 - 10mm²]; Solid wire: max. 14 AWG [2.5 mm²]
Outer Diameter — 0.41 [10.5] max.
Flat Ribbon Cables — 0.47 [12]
Length Range — 0.04”-328.05ft [1mm - 99.99m] (+/- 0.2% or 1mm, depending on wire length)
Electrical — 110 / 230V - 50/60Hz, switches automatically

For more information, request Catalog **1307774**.

The Kappa 225 is a universally, versatile machine for cutting and stripping single and multi-conductor wires. With its high cutting and pull-off power, the Kappa 225 is able to process stranded wires up to 8 AWG with an outside diameter of 0.41 inch.

Kappa 230, Automatic Cut and Strip, 3-547178-1



Specifications:

Width — 25 [630]
Depth — 16 [400]
Height — 13.4 [340]
Weight — 95 lb [43 kg]
Wire Cross-Sections — 24-5 AWG [0.22 - 16mm²]
Flat Ribbon Cables — width up to 40mm
Length Range — 0.04”-328ft [1mm - 99.99m] (+/- 0.2%)
Electrical — 110 / 230V - 50/60Hz, switches automatically

For more information, request Catalog **1307776**.

The Kappa 230 has all the features of the Kappa 225 plus the capability of processing wires with a cross section up to 6 AWG.

Products for Industrial & Commercial Applications
Dimensions are shown for reference purposes only.
Dimensions are in inches and millimeters unless otherwise specified. Values in brackets are metric equivalents.
Specifications subject to change.
Technical Support Center 1-800-522-6752 www.tycoelectronics.com

Strippers

Kappa 240, Automatic Cut and Strip, 3-547178-4 & Kappa 240 PCH, 5-547178-1



The top of the line Kappa 240 has a programmable swiveling and stripping head with the capability of processing 3/0 AWG wire. In addition it can do slitting and intermediate slitting of the wire jacket.

Specifications:

Width — 40.5 [103cm]
Depth — 31 [79cm]
Height — 22 [57cm]
Weight — 435 lb [198kg]
Wire Cross-Sections — 14-3/0 AWG [2.5 - 33mm^2]
Length Range — 9" - 328 ft [233mm - 99.99m]
Electrical — 115 / 230V - 50/60Hz, switchable

For more information, request Catalog **1307902**.

Wire Stripper Hand Tool, Model WS-2, 601827-2



Hand tool for cutting and stripping stranded or solid 20-12 AWG [0.3-3 mm^2] wire sizes. Wires are stripped at the front of the tool, thereby allowing access to short wires in confined areas. Also features a 3-position stripping depth adjustment, and an adjustable wire stop. Stripping jaws can be replaced with assembly 1-601827-2.

For more information, request Instruction Sheet **408-9686**.

Cable Cutters

Ratcheted Cable Cutter Hand Tool, 607453-2



Lightweight hand tool for cutting up to 600 kcmil [300 mm^2] copper or 800 kcmil [400 mm^2] aluminum conductors. Features a highly-leveraged, circular cutting motion using a ratcheted moving blade. The blade can also be quickly advanced using a take-up button conveniently located just beyond the handle grip.

Specifications:

Height—16 [406]
Handle Opening—19.5 [495] max.
Weight—3.3 lb [1.5 kg]

For more information, request Instruction Sheet **408-4089**.

Products for Industrial & Commercial Applications
Dimensions are shown for reference purposes only.
Dimensions are in inches and millimeters unless otherwise specified. Values in brackets are metric equivalents.
Specifications subject to change.
Technical Support Center
1-800-522-6752
www.tycoelectronics.com

Cutting Tool

Cutting Tool Kit, 314818-1

Specifications:

Width—5.1 [130]
Depth—9.0 [230]
Height—5.5 [140]
Weight—14.7 oz [417 g]

For more information, request Catalog **296501, page 45,** Instruction Sheet **408-9707** .



Tool cuts AMPMODU Mod. II Breakaway Headers (Single- or Double-Row, Vertical or Right-Angle) with .025 [.64] square posts on .100 [2.54] centers. The Kit includes a Pistol Grip Ratchet Handle, a Locator, a Cutting Head (includes blades and a stored set of 2 extra blades), a Hex Wrench, and a Carrying Case.

Crimp Quality Monitor (CQM)

Crimp Quality Monitor (CQM), 1320420-1, -2

Specifications:

Width—8.8 [220]
Depth—8.1 [205]
Height—4.6 [115]
Weight—5 lb [2.3 kg]
Electrical—100-240 VAC, 50/60 Hz, 3.2 A

For more information, request Catalog **82275**.



This unique system provides 100% on-the-fly crimp inspection. It measures the crimp height of each termination, and evaluates the quality of each crimp. If a crimp is questionable, the monitor alerts the operator with both visual and audible alarms. It also provides ports for printing and networking. When used with AMP-O-LECTRIC Model “G” Termination Machines, the monitor is mounted to the machine. When used with AMPOMATOR CLS IV Lead-Making Machines, it is integrated into the machine’s operating system.

Products for Industrial & Commercial Applications
Dimensions are shown for reference purposes only.
Dimensions are in inches and millimeters unless otherwise specified. Values in brackets are metric equivalents.
Specifications subject to change.
Technical Support Center
1-800-522-6752
www.tycoelectronics.com

Engineering Notes

Products for Industrial & Commercial Applications

Dimensions are shown for reference purposes only.

Dimensions are in inches and millimeters unless otherwise specified. Values in brackets are metric equivalents.

Specifications subject to change.

Technical Support Center
1-800-522-6752
www.tycoelectronics.com

This Part Number Index includes:
- **Tyco Electronics base part numbers and associated page numbers**
- **Part numbers and associated page numbers for ALCOSWITCH, ANSLEY, AUGAT, and BUCHANAN products acquired from Thomas & Betts Corporation**

Part Number	Page Number
01	8073
02	8073
02WDY00006	2221
02WDY00007	2221
02WEY00007	2221
02WEY00008	2221
02WFY00006	2221
02WFY00007	2221
02WGY00006	2221
02WGY00007	2221
02WGY00008	2222
02WGY00009	2222
02WJY00009	2222
02WJY000010	2222
03	8073
05WDY00006	2221
05WDY00007	2221
05WEY00007	2221
05WEY00008	2221
05WFY00006	2221
05WFY00007	2221
05WGY00006	2221
05WGY00007	2221
05WGY00008	2222
05WGY00009	2222
05WJY00009	2222
05WJY000010	2222
06	8073
07	8073
08	8073
09	8073
0105	8103
0115	8103
0125	8103
0211	8122
0212	8122
0213	8122
0218	8122
0221	8122
0222	8122
0223	8122
0228	8122
0230	8122, 8123
0511	8116
0514	8116
0514PS	8117
0515	8116
051525	8116
0517	8116
0519	8117
0521	8116
0524	8116
0524PS	8117
0525	8116
0527	8116
0529	8117
0530	8116, 8117
0611	8106, 8107
0614	8106, 8107
0615	8106, 8107
0617	8107
0618	8106
0619	8107
0621	8106, 8107
0624	8106, 8107
0625	8106, 8107
0627	8107
0628	8106
0629	8107
0630	8106, 8107
0711	8108
0714	8108
0714PS	8108
0715	8109
0717	8109
0718	8108
0719	8109
0721	8108
0724	8108
0724PS	8108
0725	8109
0727	8109
0728	8108
0729	8109
0730	8108, 8109
021320	8122
062420	8111
082410	8128
2EEA	8012
2EHDR	8025, 8026
2EHDV	8021
2ESDV	8035
2M09DSM	8083
2M10FC	8084
2M14FC	8084
2M15DSM	8083
2M16FC	8084
2M20FC	8084
2M25DSM	8083
2M26FC	8084
2M34FC	8084
2M37DSM	8083
2M40FC	8084
2M50DSM	8083
2M50FC	8084
2M60FC	8084
2M64FC	8084
2SV-02	8048
2SV-03	8048
2SV-04	8048
2SV-05	8048
2SV-06	8048
2SV-07	8048
2SV-08	8048
2SV-09	8048
2SV-10	8048
2SV-11	8048
2SV-12	8048
2SV-13	8048
2SV-14	8048
2SV-15	8048
2SV-16	8048
2TK2	8083, 8084, 8085
2TK2-48	8085
2TK2D	8083, 8084, 8085
2TK2D-48	8085
3PCV-03	8052
3PCV-04-004	8053
3PCV-10	8052
3TK2-48	8085
3TK2D	8085
3TK2D-48	8085
3WWR	8054
4DB	8051
4DB-P108	8066
4DB-P108-06	8066
4PCV-04-004	8057
4PCV-06	8056
4TK2	8085
4TK2-48	8085
4WWR	8058
5ESDV	8035
5KEV	8005
5LEA	8012
5LEEV	8014
6TK2	8085
6TK2-48	8085
6TK2D	8085
6TK2D-48	8085
7C1N07	8074
8PCV-04-004	8064
8TK2	8085
8TK2-48	8085
10WDY00006	2221
10WDY00007	2221
10WEY00007	2221
10WEY00008	2221
10WFY00006	2221
10WFY00007	2221
10WGY00006	2221
10WGY00007	2221
10WGY00008	2222
10WGY00009	2222
10WJY00009	2222
10WJY000010	2222
15WDY00006	2221
15WDY00007	2221
15WEY00007	2221
15WEY00008	2221
15WFY00006	2221
15WFY00007	2221
15WGY00006	2221
15WGY00007	2221
15WGY00008	2222
15WGY00009	2222
15WJY00009	2222
15WJY000010	2222
20WDY00006	2221
20WDY00007	2221
20WEY00007	2221
20WEY00008	2221
20WFY00006	2221
20WFY00007	2221
20WGY00006	2221
20WGY00007	2221
20WGY00008	2222
20WGY00009	2222
20WJY00009	2222
20WJY000010	2222
23-BU	8124
24WGY00008	2222
24WGY00009	2222
24WJY00009	2222
24WJY000010	2222
25WDY00006	2221
25WDY00007	2221
25WEY00007	2221
25WEY00008	2221
25WFY00006	2221
25WFY00007	2221
25WGY00006	2221
25WGY00007	2221
26	8073
27	8073, 8123
28	8073
28WDY00006	2221
28WDY00007	2221
28WEY00007	2221
28WEY00008	2221
28WFY00006	2221
28WFY00007	2221
28WGY00006	2221
28WGY00007	2221
29	8073
30	8073, 8129
30-BU	8110, 8118, 8124
31	8073
32	8073
33	8073
34	8073
35	8073
36	8073
37	8073
38	8073
39	8073
40	8073
40-BU	8118
41	8073
41-BU	8124
42	8073
43	8073, 8124
44	8073
45	8073
46	8073
47	8073
48	8073
49	8073
50	8073
50-BU	8111, 8118, 8124, 8129
51	8073
52	8073, 8129
52-BU	8103, 8111, 8118, 8124
53	8073
54	8073
54-BU	8117
55	8073
55-BU	8111, 8118, 8124, 8129
56	8073, 8124
57	8118
58	8117
60	8102, 8104, 8110, 8115, 8118, 8124, 8129
60-B-36	8102, 8110, 8118, 8124, 8129
61	8103, 8104, 8110, 8118, 8120, 8124, 8126, 8129, 8130
62	8103, 8110, 8118, 8124, 8129
63-BU	8102, 8110, 8118, 8124, 8129
64	8102, 8110, 8118, 8124, 8129
64E	6077
64S	6077
64T	6077
65-BU	8111, 8114, 8118, 8124
66	8111, 8118, 8129
67	8102, 8110, 8118, 8124, 8129
68	8102, 8103, 8104, 8110, 8115, 8118, 8124, 8129
70	8110
71	8110
73	8110
74	8111
76	8129
78-TB	8111
80	8073
81	8073
84	8110, 8115
85	8115
93-BU	8129
101B1	6070, 6071
101C1	6070, 6071
105	8103
105-BU	8102
106D1	6070
110-BU	8102
115	8103
115-BU	8102
120	8102
125	8103
125-BU	8102
130-BU	8102
164EL11	6075
164EL22	6075
164EL33	6075
164EL511	6075
164EL522	6075
164EL533	6075
164EZ	6077
164J0A11	6076
164J0A22	6076
164J0A33	6076
164J2A11	6076
164J2A22	6076
164J2A33	6076
164J2B11	6076
164J2B22	6076
164J2B33	6076
164J3A22	6076
164J3A33	6076
164J3C22	6076
164J3C33	6076
164J3E22	6076
164J3E33	6076
164J7A22	6076
164KA	6076
164P0B22	6076
164P0B33	6076
164P2B11	6076
164P2B22	6076
164P2B33	6076
164P3B22	6076
164P3B33	6076
164SL11	6075
164SL22	6075
164SL33	6075
164SL511	6075
164SL522	6075
164SL533	6075
164SZ	6077
164TL11	6075
164TL22	6075
164TL33	6075
164TL511	6075
164TL522	6075
164TL533	6075
164TZ	6077
165EL11	6075
165EL22	6075
165EL33	6075
165EL511	6075
165EL522	6075
165EL533	6075
165EZ	6077
165J2A11	6076
165J2A22	6076
165J2A33	6076
165J2B11	6076
165J2B22	6076
165J2B33	6076
165J3A22	6076
165J3A33	6076
165J3C22	6076
165J3C33	6076
165J3E22	6076
165J3E33	6076
165J7A22	6076
165P2B11	6076
165P2B22	6076
165P2B33	6076
165P3B22	6076
165P3B33	6076
165SL11	6075
165SL22	6075
165SL33	6075
165SL511	6075
165SL522	6075
165SL533	6075
165SZ	6077
165TL11	6075
165TL22	6075
165TL33	6075
165TL511	6075
165TL522	6075
165TL533	6075

Products for Industrial & Commercial Applications

Dimensions are shown for reference purposes only.

Dimensions are in inches and millimeters unless otherwise specified. Values in brackets are metric equivalents.

Specifications subject to change.

Technical Support Center
1-800-522-6752
www.tycoelectronics.com

Part Number	Page Number
165TZ	6077
206N1	6070
211	8122
212	8122
213	8122
218	8122
221	8122
222-BU	8122
223-BU	8122
228-BU	8122
230-BU	8122, 8123
322-HCS5P2-100	5045
322-HCS5P2-300	5045
322-HCS5P2-308	5045
322-HCS5P2-314	5045
322-HCS5P2-316	5045
322-HCS5P2-318	5045
322-HCS5P2-320	5045
322-HCS5P2-400	5045
322-HCS5P2-422	5045
322-HCS5P2-424	5045
322-HCS5P2-600	5045
322-HCS5P2-624	5045
322-HCS5P2-628	5045
322-HCS5P2-632	5045
322-HCS5P2-636	5045
322-HCS5P2-640	5045
322-HCS5P3-100	5045
322-HCS5P3-300	5045
322-HCS5P3-308	5045
322-HCS5P3-314	5045
322-HCS5P3-316	5045
322-HCS5P3-318	5045
322-HCS5P3-320	5045
322-HCS5P3-400	5045
322-HCS5P3-422	5045
322-HCS5P3-424	5045
322-HCS5P3-600	5045
322-HCS5P3-624	5045
322-HCS5P3-628	5045
322-HCS5P3-632	5045
322-HCS5P3-636	5045
322-HCS5P3-640	5045
322-HCS6P2-100	5045
322-HCS6P3-100	5045
322-HCS8P2-100	5045
322-HCS8P3-100	5045
322-HCS14P2-100	5045
322-HCS14P3-100	5045
398-HK-001	5047
398-HK-002	5047
399-HT-112	5047
399-HT-113	5047
399-HT-114	5047
406NI	6070
500Si	8088
500Si 5	8100
500Si 5K	8100
500Si 10	8100
500Si 10K	8100
501-0607XX	4018
501-0627XX	4021
501-1007XX	4018
501-1027XX	4021
501-1207XX	4018
501-1227XX	4021
501-1407XX	4018
501-1427XX	4021
501-1607XX	4018
501-1627XX	4021
501-2007XX	4018
501-2027XX	4021
501-2407XX	4018
501-2427XX	4021
501-2607XX	4018
501-2627XX	4021
501-3007XX	4018
501-3027XX	4021
501-3407XX	4018
501-3427XX	4021
501-3627XX	4021
501-4007XX	4018
501-4027XX	4021
501-5007XX	4018
501-5027XX	4021
501-6007XX	4018
501-6027XX	4021
501-6407XX	4018
501-6427XX	4021
503Si	8088
503Si 1	8095
503Si 1DS	8095
503Si 2	8095
503Si 2DS	8095
503Si 3	8095
503Si 3DS	8095
503Si 3E	8095
503Si 3EDS	8095
503Si 4	8095
503Si 4DS	8095
503Si 4E	8095
503Si 4EDS	8095
503Si 5	8095
503Si 5DS	8095
503Si 5E	8095
503Si 5EDS	8095
504-AG10D	5064
504-AG10F	5064
504-AG11D	5064
504-AG11F	5064
504-AG12D	5064
506-AG10D	5009
506-AG10D-ES	5009
506-AG10D-ESL	5009
506-AG11D	5009
506-AG11D-ES	5009
506-AG11D-ESL	5009
506-AG12D	5009
506-AG12D-ES	5009
508-4P1	5055
508-AG10D	5009
508-AG10D-ES	5009
508-AG10D-ESL	5009
508-AG11D	5009
508-AG11D-ES	5009
508-AG11D-ESL	5009
508-AG12D	5009
508-AG12D-ES	5009
508-AG4A	5054
508-AG4F	5054
508-AG7D	5054
508-AG8D	5053, 5054
508-AG8D-3	5055
508-AG8D-3E	5055
508-AG8D-5	5055
510-21114	5063
510-21232	5063
510-AG42D-XX	5020
510-AG42DXXES(L)	5020
510-AG44D-XX	5020
510-AG44DXXES(L)	5020
510-AG45D-XX	5020
510-AG45DXXES(L)	5020
510-AG90D-10	5020
510-AG90D10ES	5020
510-AG90D10ESL	5020
510-AG90D-20	5020
510-AG90D20ES	5020
510-AG90D20ESL	5020
510-AG91D08ESL	5020
510-AG91D-10	5020
510-AG91D10ES	5020
510-AG91D10ESL	5020
510-AG91D-20	5020
51-0AG91D20ES	5020
510-AG91D20ESL	5020
510-AG92D-10	5020
510-AG92D10ES	5020
510-AG92D-20	5020
510AG92D20ES	5020
511-BU	8116
514	8116
514-AG10D	5009
514-AG10D-ES	5009
514-AG10D-ESL	5009
514-AG11D	5009
514-AG11D-ES	5009
514-AG11D-ESL	5009
514-AG12D	5009
514-AG12D-ES	5009
514-AG21D	5054
514-AG7D	5054
514PS	8117
515-BU	8116
516-AG7D	5054
516-AG10D	5009
516-AG10D-ES	5009
516-AG10D-ESL	5009
516-AG11D	5009
516-AG11D-ES	5009
516-AG11D-ESL	5009
516-AG12D	5009
516-AG12D-ES	5009
516-AG21D	5053, 5054
517	8116
518-AG7D	5053, 5054
518-AG10D	5009
518-AG10D-ES	5009
518-AG10D-ESL	5009
518-AG11D	5009
518-AG11D-ES	5009
518-AG11D-ESL	5009
518-AG12D	5009
518-AG12D-ES	5009
519	8117
520-AG7D	5054
520-AG10D	5009
520-AG10D-ES	5009
520-AG10D-ESL	5009
520-AG11D	5009
520-AG11D-ES	5009
520-AG11D-ESL	5009
520-AG12D	5009
520-AG12D-ES	5009
521-BU	8116
522-AG10D	5009
522-AG10D-ES	5009
522-AG10D-ESL	5009
522-AG11D	5009
522-AG11D-ES	5009
522-AG11D-ESL	5009
522-AG12D	5009
522-AG12D-ES	5009
524	8116
524-AG10D	5009
524-AG10D-ES	5009
524-AG10D-ESL	5009
524-AG11D	5009
524-AG11D-ES	5009
524-AG11D-ESL	5009
524-AG12D	5009
524-AG12D-ES	5009
524-AG13D	5009
524-AG13D-ES	5009
524-AG65D	5009
524-AG65D-ES	5009
524-AG65D-ESL	5009
524-AG66D	5009
524-AG66D-ES	5009
524-AG66D-ESL	5009
524PS	8117
525	8116
527	8116
528-AG10D	5009
528-AG10D-ES	5009
528-AG10D-ESL	5009
528-AG11D	5009
528-AG11D-ES	5008, 5009
528-AG11D-ESL	5009
528-AG12D	5009
528-AG12D-ES	5009
529	8117
530-BU	8116, 8117
532-AG10D	5009
532-AG10D-ES	5009
532-AG10D-ESL	5009
532-AG11D	5009
532-AG11D-ES	5009
532-AG11D-ESL	5009
532-AG12D	5009
532-AG12D-ES	5009
536-AG10D	5009
536-AG10D-ES	5009
536-AG10D-ESL	5009
536-AG11D	5009
536-AG11D-ES	5009
536-AG11D-ESL	5009
536-AG12D	5009
536-AG12D-ES	5009
540-AG10D	5009
540-AG10D-ES	5009
540-AG10D-ESL	5009
540-AG11D	5009
540-AG11D-ES	5009
540-AG11D-ESL	5009
540-AG12D	5009
540-AG12D-ES	5009
5XX-AG33D	5009
5XX-AG34D	5009
5XX-AG38D	5009
5XX-AG44D-XXX	5009
5XX-AG45D-XXX	5009
5XXX-AG143D-XXX	5009
606-AG10	5052
608-AG1	5049
608-AG1T	5049
608-AG1TF	5049
608-AG19	5052
608-AG21	5052
608-AG22	5051, 5052
608-BG1	5049
608-BG1T	5049
608-CG1	5049
608-CG1T	5049
609-0600M	4010
609-0601M	4010
609-0607	4016
609-0627	4014
609-0630	4010
609-0641	4010
609-0647	4016
609-0657	4014
609-0807XX	4019
609-0827	4014
609-0827XX	4022
609-0837XX	4022
609-1000M	4010
609-1001M	4010
609-1007	4016
609-1007XX	4019
609-1017XX	4019
609-1027	4014
609-1027XX	4022
609-1030	4010
609-1037XX	4022
609-1041	4010
609-1047	4016
609-1057	4014
609-1227	4014
609-1400M	4010
609-1401M	4010
609-1407	4016
609-1407XX	4019
609-1417XX	4019
609-1427	4014
609-1427XX	4022
609-1430	4010
609-1437XX	4022
609-1441	4010
609-1447	4016
609-1457	4014
609-1600M	4010
609-1601M	4010
609-1607	4016
609-1607XX	4019
609-1617XX	4019
609-1627	4014
609-1627XX	4022
609-1630	4010
609-1637XX	4022
609-1641	4010
609-1647	4016
609-1657	4014
609-2000M	4010
609-2001M	4010
609-2007	4016
609-2007XX	4019
609-2017XX	4019
609-2027	4014
609-2027XX	4022
609-2030	4010
609-2037XX	4022
609-2041	4010
609-2047	4016
609-2057	4014
609-2400M	4010
609-2401M	4010
609-2407	4016
609-2407XX	4019
609-2417XX	4019
609-2427	4014
609-2427XX	4022
609-2430	4010
609-2437XX	4022
609-2441	4010
609-2447	4016
609-2457	4014
609-2600M	4010
609-2601M	4010
609-2607	4016
609-2607XX	4019
609-2617XX	4019
609-2627	4014
609-2627XX	4022
609-2630	4010
609-2637XX	4022
609-2641	4010
609-2647	4016
609-2657	4014
609-3007XX	4019
609-3017XX	4019
609-3027	4014
609-3027XX	4022
609-3057	4014
609-3400M	4010
609-3401M	4010
609-3407	4016
609-3407XX	4019
609-3417XX	4019
609-3427	4014
609-3427XX	4022
609-3430	4010
609-3437XX	4022
609-3441	4010
609-3447	4016
609-3457	4014
609-3600M	4010
609-3601M	4010
609-3630	4010
609-3641	4010

Products for Industrial & Commercial Applications

Dimensions are shown for reference purposes only.

Dimensions are in inches and millimeters unless otherwise specified. Values in brackets are metric equivalents.

Specifications subject to change.

Technical Support Center
1-800-522-6752
www.tycoelectronics.com

Part Number	Page Number
609-4000M	4010
609-4001M	4010
609-4007	4016
609-4007XX	4019
609-4017XX	4019
609-4027	4014
609-4027XX	4022
609-4030	4010
609-4037XX	4022
609-4041	4010
609-4047	4016
609-4057	4014
609-5000M	4010
609-5001M	4010
609-5007	4016
609-5007XX	4019
609-5017XX	4019
609-5027	4014
609-5027XX	4022
609-5030	4010
609-5037XX	4022
609-5041	4010
609-5047	4016
609-5057	4014
609-6000M	4010
609-6001M	4010
609-6007	4016
609-6007XX	4019
609-6017XX	4019
609-6027	4014
609-6027XX	4022
609-6030	4010
609-6041	4010
609-6047	4016
609-6057	4014
609-6400M	4010
609-6401M	4010
609-6407	4016
609-6407XX	4019
609-6417XX	4019
609-6427	4014
609-6427XX	4022
609-6430	4010
609-6437XX	4022
609-6441	4010
609-6447	4016
609-6457	4014
610-AG19	5052
610-AG22	5052
611-BU	8106
614-AG1	5049
614-AG1T	5049
614-AG2	5049
614-AG2T	5049
614-AG3	5049
614-AG3T	5049
614-BG1	5049
614-BG1T	5049
614-BG2	5049
614-BG2T	5049
614-BG3	5049
614-BG3T	5049
614-BU	8106
614-CG1	5048, 5049
614-CG1T	5049
614-CG2	5049
614-CG2T	5049
614-CG3	5049
614-CG3T	5049
615-BU	8106
616-AG1	5049
616-AG1T	5049
616-AG2	5049
616-AG2T	5049
616-AG3	5049
616-AG3T	5049
616-BG1	5049
616-BG1T	5049
616-BG2	5049
616-BG2T	5049
616-BG3	5049
616-BG3T	5049
616-CG1	5049
616-CG1T	5049
616-CG2	5049
616-CG2T	5049
616-CG3	5049
616-CG3T	5049
617	8107
618-AG1	5049
618-AG1T	5049
618-BG1	5049
618-BG1T	5049
618-BU	8106
618-CG1	5049
618-CG1T	5049
619	8107
620-AG1	5049
620-AG1T	5049
620-BG1	5049
620-BG1T	5049
620-CG1	5049
620-CG1T	5049
621	8106
622-AG1	5049
622-AG1T	5049
622-BG1	5049
622-BG1T	5049
622-CG1	5049
622-CG1T	5049
624	8106
624-AG1	5049
624-AG1T	5049
624-BG1	5049
624-BG1T	5049
624-CG1	5049
624-CG1T	5049
625	8106
627	8107
628	8106
628-AG2	5049
628-AG2T	5049
628-BG2	5049
628-BG2T	5049
628-CG2	5049
628-CG2T	5049
629	8107
630-BU	8106, 8107
632-AG2	5049
632-AG2T	5049
632-BG2	5049
632-BG2T	5049
632-CG2	5049
632-CG2T	5049
636-AG1	5049
636-AG1T	5049
636-BG1	5049
636-BG1T	5049
636-CG1	5049
636-CG1T	5049
640-AG1	5049
640-AG1T	5049
640-BG1	5049
640-BG1T	5049
640-CG1	5049
640-CG1T	5049
706-AG1D	5011
706-AG2D	5011
706-AG2D-ES	5011
706-AG2D-ESL	5011
706-AG10D	5011
706-AG20D	5011
708-AG1D	5011
708-AG2D	5011
708-AG2D-ES	5011
708-AG2D-ESL	5011
708-AG10D	5011
708-AG20D	5011
711-BU	8108
714	8108
714-AG1D	5011
714-AG2D	5011
714-AG2D-ES	5011
714-AG2D-ESL	5011
714-AG10D	5011
714-AG20D	5011
714PS	8108
715-BU	8109
716-AG1D	5011
716-AG2D	5011
716-AG2D-ES	5011
716-AG2D-ESL	5011
716-AG10D	5011
716-AG20D	5011
717	8109
718	8108
718-AG1D	5011
718-AG2D	5011
718-AG2D-ES	5011
718-AG2D-ESL	5011
718-AG10D	5011
718-AG20D	5011
719	8109
720-AG1D	5011
720-AG2D	5011
720-AG2D-ES	5011
720-AG2D-ESL	5011
720-AG10D	5011
720-AG20D	5011
721	8108
722-AG1D	5011
722-AG2D	5011
722-AG2D-ES	5011
722-AG2D-ESL	5011
722-AG10D	5011
722-AG20D	5011
722-AG21D	5011
722-AG22D	5011
722-AG22D-ES	5011
722-AG22D-ESL	5011
722-AG310D	5011
722-AG320D	5011
724	8108
724-AG1D	5011
724-AG2D	5011
724-AG2D-ES	5011
724-AG2D-ESL	5011
724-AG3D	5011
724-AG4D	5011
724-AG4D-ES	5011
724-AG4D-ESL	5011
724-AG10D	5011
724-AG20D	5011
724-AG21D	5011
724-AG22D	5011
724-AG22D-ES	5011
724-AG22D-ESL	5011
724-AG30D	5011
724-AG40D	5011
724-AG410D	5011
724-AG420D	5011
724PS	8108
725	8109
727	8109
728	8108
728-AG3D	5011
728-AG4D	5011
728-AG4D-ES	5011
728-AG4D-ESL	5011
728-AG30D	5011
728-AG40D	5011
729	8109
730	8108, 8109
732-AG3D	5011
732-AG4D	5011
732-AG4D-ES	5010, 5011
732-AG4D-ESL	5011
732-AG30D	5011
732-AG40D	5011
736-AG3D	5011
736-AG4D	5011
736-AG4D-ES	5011
736-AG4D-ESL	5011
736-AG30D	5011
736-AG40D	5011
736-M0020	5047
740-AG3D	5011
740-AG4D	5011
740-AG4D-ES	5011
740-AG4D-ESL	5011
740-AG30D	5011
740-AG40D	5011
808-AG10D	5013
808-AG10D-ES	5013
808-AG10D-ESL	5013
808-AG11D	5013
808-AG11D-ES	5013
808-AG11D-ESL	5013
808-AG11SM	5015
808-AG12D	5013
808-AG12D-ES	5013
808-AG12SM	5015
814	8128
814-AG10D	5013
814-AG10D-ES	5013
814-AG10D-ESL	5013
814-AG11D	5013
814-AG11D-ES	5013
814-AG11D-ESL	5013
814-AG11SM	5014, 5015
814-AG12D	5013
814-AG12D-ES	5013
814-AG12SM	5015
816-AG10D	5013
816-AG10D-ES	5013
816-AG10D-ESL	5013
816-AG11D	5013
816-AG11D-ES	5013
816-AG11D-ESL	5013
816-AG11SM	5015
816-AG12D	5013
816-AG12D-ES	5013
816-AG12SM	5015
818-AG10D	5013
818-AG10D-ES	5013
818-AG10D-ESL	5013
818-AG11D	5013
818-AG11D-ES	5013
818-AG11D-ESL	5013
818-AG11SM	5015
818-AG12D	5013
818-AG12D-ES	5013
818-AG12SM	5015
820-AG10D	5013
820-AG10D-ES	5013
820-AG10D-ESL	5013
820-AG11D	5013
820-AG11D-ES	5013
820-AG11D-ESL	5013
820-AG11SM	5015
820-AG12D	5013
820-AG12D-ES	5013
820-AG12SM	5015
822-AG10D	5013
822-AG10D-ES	5013
822-AG10D-ESL	5013
822-AG11D	5013
822-AG11D-ES	5013
822-AG11D-ESL	5013
822-AG11SM	5015
822-AG12D	5013
822-AG12D-ES	5013
822-AG12SM	5015
824-AG10D	5013
824-AG10D-ES	5013
824-AG10D-ESL	5013
824-AG11D	5013
824-AG11D-ES	5013
824-AG11D-ESL	5013
824-AG11SM	5015
824-AG12D	5013
824-AG12D-ES	5013
824-AG12SM	5015
824-AG14D	5013
824-AG14D-ES	5013
824-AG14SM	5015
824-AG30D	5013
824-AG30D-ES	5013
824-AG30D-ESL	5013
824-AG31D	5013
824-AG31D-ES	5013
824-AG31D-ESL	5013
824-AG31SM	5015
824-AG32D	5013
824-AG32D-ES	5013
824-AG32SM	5015
824-AG65D	5013
824-AG65D-ES	5013
824-AG65D-ESL	5013
824-AG66D	5013
824-AG66D-ES	5013
824-AG66D-ESL	5013
824-AG66SM	5015
824-BU	8128
828-AG10D	5013
828-AG10D-ES	5013
828-AG10D-ESL	5013
828-AG11D	5013
828-AG11D-ES	5012, 5013
828-AG11D-ESL	5013
828-AG11SM	5015
828-AG12D	5013
828-AG12D-ES	5013
828-AG12SM	5015
830-BU	8128
832-AG10D	5013
832-AG10D-ES	5013
832-AG10D-ESL	5013
832-AG11D	5013
832-AG11D-ES	5013
832-AG11D-ESL	5013
832-AG11SM	5015
832-AG12D	5013
832-AG12D-ES	5013
832-AG12SM	5015
836-AG10D	5013
836-AG10D-ES	5013
836-AG10D-ESL	5013
836-AG11D	5013
836-AG11D-ES	5013
836-AG11D-ESL	5013
836-AG11SM	5015
836-AG12D	5013
836-AG12D-ES	5013
836-AG12SM	5015
840-AG10D	5013
840-AG10D-ES	5013
840-AG10D-ESL	5013
840-AG11D	5013
840-AG11D-ES	5013
840-AG11D-ESL	5013
840-AG11SM	5015
840-AG12D	5013
840-AG12D-ES	5013
840-AG12SM	5015
842-AG10D	5013
842-AG10D-ES	5013
842-AG10D-ESL	5013
842-AG11D	5013
842-AG11D-ES	5013

Products for Industrial & Commercial Applications

Dimensions are shown for reference purposes only.

Dimensions are in inches and millimeters unless otherwise specified. Values in brackets are metric equivalents.

Specifications subject to change.

Technical Support Center
1-800-522-6752
www.tycoelectronics.com

Part Number	Page Number
842-AG11D-ESL	5013
842-AG11SM	5015
842-AG12D	5013
842-AG12D-ES	5013
842-AG12SM	5015
848-AG10D	5013
848-AG10D-ES	5013
848-AG10D-ESL	5013
848-AG11D	5013
848-AG11D-ES	5013
848-AG11D-ESL	5013
848-AG11SM	5015
848-AG12D	5013
848-AG12D-ES	5013
848-AG12SM	5015
864-AG10D	5014
864-AG10D-ES	5014
864-AG10D-ESL	5014
864-AG11D	5014
864-AG11D-ES	5014
864-AG11D-ESL	5014
864-AG11SM	5015
864-AG12D	5014
864-AG12D-ES	5014
864-AG12SM	5015
8XX-AG33D	5014
8XX-AG34D	5014
8XX-AG38D	5014
8XX-AG43D-XXX	5014
8XX-AG44D-XXX	5014
8XX-AG45D-XXX	5014
1003Si	8089
1003Si 1	8099
1003Si 1DS	8099
1003Si 2	8099
1003Si 2DS	8099
1003Si 3	8099
1003Si 3DS	8099
1003Si 3E	8099
1003Si 3EDS	8099
1003Si 4	8099
1003Si 4DS	8099
1003Si 4E	8099
1003Si 4EDS	8099
1003Si 5	8099
1003Si 5DS	8099
1003Si 5E	8099
1003Si 5EDS	8099
1210	7072, 7073
2400	8123
2410	8123
2614	7072, 7073
5810	8117
8000-AG1	5057
8000-AG2	5056, 5057, 5059
8000-AG3	5057
8000-AG4	5057
8000-AG9	5057, 5059
8000-AG36	5057, 5060
8000-M65	5075
8000-MG3	5076
8000-MG4	5076
8000-MG5	5076
8000-MG6	5076
8000-MG8	5076
8004-1G1	5057
8004-1G2	5057
8004-1G3	5057
8004-1G4	5057, 5058
8004-1G16	5057
8004-1G23	5057, 5058
8004-1G26	5057
8004-23G1	5057
8007-1G1	5076
8007-1G5	5076
8011-8G1	5076
8011-8G2	5076
8011-8G3	5076
8011-8G6	5076
8011-8G7	5076
8011-8G8	5076
8011-8G9	5076
8011-8G10	5076
8011-8G11	5076
8011-8G12	5076
8011-8G13	5076
8011-8G15	5076
8011-8G16	5076
8038-3P1	5074
8041-1G2	5078
8041-1G2-1	5078
8041-1G3	5078
8041-1G3-1	5078
8041-1G4	5078
8041-1G4-1	5077, 5078
8041-1G5	5078
8041-1G5-1	5078
8041-1G6	5078
8041-1G6-1	5078
8041-1G7	5078
8041-1G7-1	5078
8041-1G8	5078
8041-1G8-1	5078
8041-1G9	5078
8041-1G9-1	5078
8041-1G10	5078
8041-1G10-1	5078
8041-1G11	5078
8041-1G11-1	5078
8046-1G1	5080
8046-1G2	5079, 5080
8046-1G3	5080
8046-1G4	5080
8046-1G5	5080
8046-1G6	5080
8046-1G7	5080
8046-1G8	5080
8046-1G9	5080
8046-1G10	5080
8046-1G11	5080
8058-1G19	5068
8058-1G23	5068
8058-1G24	5068
8058-1G29	5068
8058-1G30	5068
8058-1G31	5068
8058-1G32	5068
8058-1G34	5068
8058-1G42	5068
8058-1G43	5068
8058-1G45	5068
8058-1G46	5068
8058-1G47	5068
8058-1G48	5068
8058-1G49	5068
8058-1G50	5068
8058-1G51	5068
8058-1G52	5068
8058-1G55	5068
8058-1G57	5068
8058-1G58	5068
8058-1G59	5068
8058-1G61	5068
8058-1G62	5068
8058-1G63	5068
8058-24G1	5068
8058-38G6	5068
8058-39G1	5068
8058-39G3	5068
8058-39G4	5068
8058-39G5	5068
8058-39G6	5068
8059-2G1	5066
8059-2G2	5066
8059-2G3	5066
8059-2G4	5066
8059-2G5	5066
8059-2G6	5066
8059-2G7	5065, 5066
8059-2G8	5066
8059-2G9	5066
8059-2G10	5066
8059-4G1	5066
8059-4G4	5066
8060-1G3	5069
8060-1G4	5069
8060-1G5	5069
8060-1G6	5067, 5069
8060-1G7	5069
8060-1G8	5069
8060-1G9	5069
8060-1G10	5069
8060-1G11	5067, 5069
8060-1G12	5069
8060-1G13	5069
8060-1G16	5071, 5072
8060-1G17	5069
8060-1G20	5072
8060-1G22	5069
8060-1G23	5072
8060-1G25	5072
8060-1G34	5072
8080-1G1	5074
8080-1G2	5074
8080-1G3	5074
8080-1G4	5074
8080-1G7	5073, 5074
8080-1G9	5074
8080-1G10	5074
8080-1G13	5074
8080-1G14	5074
8080-1G15	5074
8080-1G16	5074
8080-1G17	5074
8080-1G20	5074
8080-1G24	5074
8080-1G25	5074
8080-1G27	5074
8080-1G29	5074
8080-1G31	5074
8080-1G32	5074
8080-1G33	5074
8080-1G34	5074
8080-1G35	5074
8080-1G36	5074
8080-1G37	5074
8080-1G38	5074
8080-1G39	5074
8080-1G44	5074
8080-1G45	5074
8128-39P6	5050
8128-40P10	5050
8128-41P6	5050
8134-HC-5P2	5044
8134-HC-5P3	5043, 5044
8134-HC-6P2	5044
8134-HC-6P3	5044
8134-HC-8P2	5044
8134-HC-8P3	5044
8134-HC-12P2	5044
8134-HC-12P3	5044
8134-HC-14P2	5044
8134-HC-14P3	5044
8136-475G1	5062
8136-475G1T	5062
8136-475G2	5062
8136-475G3	5062
8136-475G4	5062
8136-475G7	5062
8136-475G8	5061, 5062
8136-475G9	5062
8136-477P1	5062
8136-650P2	5062
8136-650P3	5062
8136-651P2	5062
8136-651P3	5062
8136-652P1	5062
8136-652P2	5062
8136-652P3	5062
8136-652P4	5062
8136-652P5	5062
8136-652P6	5062
11299	2004
13126	10076
13127	10076
19024	9139
19156	4026
21027	10076
21124	3043, 3066, 3075, 3083, 3084
22112	8122
30927	7018
30928	7018
30993	7018
30996	7018
30997	7018
31094	7018
31096	7018
31269	7018
31398	7018
31518	7018
31679	7018
31771	7018
31805	7005
31807	7006
31808	7006
31811	7007
31812	7007
31818	7015
31819	7015
31887	7038
31895	7039
31897	7039
32050	7043
32051	7043
32054	7043
32060	7044
32151	7015
32446	7048
32448	7048
32497	7044
32498	7044
32510	7045
32561	7044
32562	7044
32588	7044
32589	7044
32836	7038
32837	7038
32883	7040
32944	7053
32945	7053
32947	7053
32948	7053
32950	7053
32951	7053
32952	7053
32953	7053
32958	7053
32959	7054
32960	7054
32961	7054
32981	7057
32994	7005
32995	7010
32996	7006
33114	7007
33115	7007
33155	7044
33156	7044
33173	7043
33220	7005
33456	7005
33457	7005
33458	7005
33459	7005
33460	7006
33461	7006
33462	7006
33464	7006
33465	7006
33466	7006
33467	7006
33468	7007
33469	7007
34067	7060
34068	7060
34069	7060
34071	7060
34072	7060
34080	7043
34103	7004
34104	7004
34105	7004
34107	7004
34108	7004
34109	7004
34110	7004
34111	7004
34112	7004
34113	7004
34114	7004
34115	7004
34118	7010
34119	7004
34120	7004
34121	7004
34122	7004
34123	7004
34124	7004
34125	7004
34126	7004
34128	7010
34129	7010
34130	7014
34131	7061
34134	7061
34135	7061
34136	7061
34137	7014
34138	7014
34140	7053
34141	7053
34142	7053
34143	7053
34144	7053
34145	7053
34146	7053
34147	7053
34148	7053
34150	7053
34151	7053
34152	7053
34155	7057
34156	7057
34157	7053
34158	7053
34159	7053
34160	7054
34162	7054
34163	7054
34164	7054
34167	7057
34168	7054
34172	7054
34173	7054
34176	7057
34203	7060
34204	7060

Products for Industrial & Commercial Applications

Dimensions are shown for reference purposes only.

Dimensions are in inches and millimeters unless otherwise specified. Values in brackets are metric equivalents.

Specifications subject to change.

Technical Support Center
1-800-522-6752
www.tycoelectronics.com

Part Number	Page Number
34243	7060
34266	7010
34294	7048
34304	7071, 7072
34306	7071, 7072
34308	7071, 7072
34318	7014, 7026
34321	7015
34322	7015
34323	7015
34349	7072
34484	7005
34486	7005
34487	7005
34567	7009
34806	7040
34810	7040
34812	7129
34823	7054
34824	7054
34826	7054
34837	7054
34839	7129
34848	7129
34852	7054
34854	7054
34855	7054
34856	7054
34864	7071, 7072
34865	7072
34945	7060
34974	7040
35106	7039
35107	7040
35111	7040
35112	7040
35115	7071, 7073
35135	7005
35148	7040
35149	7040
35151	7040
35152	7044
35184	7007
35185	7007
35189	7015
35244	7060
35247	7006
35273	7040
35316	7040
35345	7041
35346	7041
35349	7054
35363	7041
35364	7041
35432	7009
35476	7005
35478	7041
35492	7054
35495	7010
35559	7044
35604	7041
35605	7041
35634	7039
35653	7071, 7073
35664	7006
35665	7006
35666	7006
35668	7007
35669	7007
35670	7007
35678	7006
35684	7005
35762	7048
35771	7005
35772	7005
35775	7009
35776	7009
35787	7040
36149	7038, 7041, 7042
36150	7038
36153	7038, 7041, 7042
36157	7039
36161	7040, 7042
36195	7010
36203	7040
36254	7038
36270	7013
36271	7013
36272	7013
36467	7004
36808	7006
36809	7006
36810	7006
36886	7015
36906	7015
36909	7014
36915	7007
36916	7007
36918	7007
36921	7008
36922	7008
36925	7008
36929	7008
36932	7008
36934	7008
36935	7008
36946	7014
36948	7014
36954	7047
36957	7016
36958	7016
36959	7016
36960	7016
36964	7071, 7072
36965	7071, 7072
37836	7072, 7073
38394	7151
40552	7131
40595	7129
40617	7105
40661	7127
40668	7129
40705	7131
40723	7127
40725	7127
40777	7129
40810	7129
40868	7131
40977	7129
41006	7129
41124	7128
41126	7128
41143	7104, 7105
41194	7104, 7105
41202	7104, 7105
41274	7104, 7105
41290	7094
41291	7094
41292	7094
41332	7128
41333	7128
41339	7093
41343	7130
41346	7129
41370	7094
41456	7127
41472	7127
41473	7131
41480	7094
41481	7094
41531	7081, 7104
41532	7104
41558	7127
41559	7128
41560	7128
41581	7127
41582	7127
41619	7094
41700	7139
41711	7127
41765	7139
41766	7139
41771	7104, 7105
41772	7104, 7105
41774	7079
41778	7102
41800	7082
41802	7082
41832	7079
41898	7102
41899	7139
41900	7139
41904	7139
41911	7129
42021	7102
42036	7127
42037	7127
42041	7082
42065	7127
42067	7105
42076	7139
42095	7093
42110	7129
42113	7131
42115	7094
42119	7139
42142	7132
42168	7131
42169	7131
42190	7130
42191	7130
42192	7139
42197	7104
42198	7104
42199	7085
42214	7093
42236	7105
42281	7108
42285	7104, 7105
42373	7105
42374	7105
42398	7105
42399	7090, 7105
42400	7077, 7104, 7105, 7106
42404	7081
42415	7090, 7105
42428	7132
42429	7132
42437	7079
42452	7105
42453	7105
42474	7095
42475	7095
42490	7097
42506	7093
42508	7127
42510	7077, 7104, 7105, 7106
42511	7081, 7104
42559	7093
42563	7082
42579	7077
42580	7108
42604	7105
42608	7105
42616	7105
42617	7086, 7105
42618	7088
42638	7102
42639	7128
42640	7077, 7104, 7105
42643	7104, 7105
42660	7078
42692	7078
42710	7085, 7104
42712	7104
42713	7104
42721	7127
42722	7129
42751	7128
42752	7128
42775	7145
42776	7145
42777	7145
42778	7145
42779	7145
42800	7088
42801	7086
42802	7094
42822	7093
42844	7124
42845	7080
42863	7129
42868	7133
42891	7133
42899	7129
42913	7129
42938	7128
45098	9105, 12015
45160	7067
45216	7072, 7073
45217	7072, 7073
45218	7072, 7073
45219	7072, 7073
45220	7072, 7073
45221	7072, 7073
45323	7072
45324	7072
45325	7072
45328	7072
45329	7072
45330	7072
45433	7020, 7031
45436	7020, 7031
45439	7020
45442	7020
45445	7020
45449	7067
45450	7067
45575	7067
45638	9118
45639	9118
45730	7030
45740	9118
46063	7074
46073	7069
46110	7051, 7072, 7073
46121	7067
46133	7020, 7030, 7031
46134	7020, 7030
46135	7020, 7031
46136	7020, 7031
46137	7020, 7031
46138	7020, 7031
46145	7020, 7030
46146	7020, 7030
46251	7019
46282	7051
46283	7051
46284	7051
46285	7051
46321	7036
46322	7036
46323	7036
46324	7036
46325	7036
46447	7031
46467	7030
46468	7030
46516	7072
46673	7031
46749	7036
46750	7036
46751	7036
46752	7036
46753	7036
46754	7036
46755	7036
46756	7036
46757	7036
46758	7036
46759	7036
46760	7036
46765	7036
46766	7036
46767	7036
46866	7072, 7073
46988	7031
47044	7163
47094	7102
47236	7068
47237	7068
47238	7068
47239	7068
47378	7068
47386	7051, 7067, 7074
47387	7051, 7067, 7074
47498	7051
47499	7051
47500	7051
47516	7051
47517	7051
47518	7051
47784	7019
47806	7051, 7067
47807	7051, 7067
47808	7051, 7067
47811	7072, 7073
47812	7019
47813	7019
47814	7019
47820	7068
47821	7068
47822	7068
47823	7068
47824	7068
47825	7068
47915	7068
47918	7068
48070	7019
48087	7072
48126	7020, 7031
48127	7020, 7031
48128	7020, 7031
48129	7020, 7031
48130	7020, 7031
48131	7020, 7031
48132	7020, 7031
48133	7020
48134	7020
48172	7020, 7031
48173	7020, 7031
48174	7020, 7031
48183	7020, 7031
48208	7072, 7073
48355	7020, 7031
48412	7020
48413	7020
48415	7020
48505	7020
48506	7020
48507	7020
48508	7020
48509	7020
48510	7020
48511	7020

Products for Industrial & Commercial Applications

Dimensions are shown for reference purposes only.

Dimensions are in inches and millimeters unless otherwise specified. Values in brackets are metric equivalents.

Specifications subject to change.

Technical Support Center
1-800-522-6752
www.tycoelectronics.com

Part Number	Page Number
48518	7124
48652	7020, 7068
48753	7068
48754	7068
48755	7068
48756	7068
48757	7068
48758	7068
48759	7068
48805	7020
48806	7020
48807	7020
48816	7020
48817	7020
48818	7020
48819	7020
49512	7019
49513	7019
49592	7019
49935	7019, 7151
49956	7020, 7031
49965	7019
49975	7019
50079	9118
50080	9118
50334	7004
50719	7155
50720	7155
50834	7024
50836	7024
50845	7024
50846	7024
50881	7039
50920	7071, 7072
50981	7004
51565	9116, 9117
51692	10031
51826	7156
51863	7038, 7041, 7042
51864	7042
51874	7044
51941	7156
51942	7156
51979	7155
51982	7155
51986	7155
52007	7156
52013	7156
52041	7055
52042	7055
52043	7055
52044	7056
52045	7056
52172	3077
52189	7038
52195	7151
52197	7006
52262	7055
52263	7055
52264	7055
52265	7055
52266	7055
52267	7056
52273	7041, 7042
52274	7042
52291	7055
52350	7055
52369	7044
52409	7046
52410	7046
52411	7046
52420	7046
52421	7046
52422	7046
52423	7046
52431	7046
52432	7046
52433	7046
52453	7059
52454	7059
52463	7059
52464	7059
52465	7059
52713	7011
52714	7011
52717	7011
52730	7012
52745	7156
52746	7156
52747	7156
52748	7156
52749	7156
52750	7156
52751	7156
52791	7156
52792	7156
52856	7057
52922	7045
52925	7045
52927	7045
52928	7045
52929	7045
52930	7045
52931	7045
52934	7045
52935	7045
52936	7045
52937	7046
52939	7046
52942	7046
52945	7046
52947	7058
52949	7058
52950	7058
52951	7058
52955	7058
52956	7058
52957	7058
52961	7058
52962	7058
52963	7058
53041	7066
53089	7035
53106	7006
53115	7043
53119	7066
53120	7011
53123	7011
53124	7011
53125	7011
53126	7011
53128	7011
53175	7011
53234	7071, 7072
53240	7058
53241	7058
53242	7058
53244	7058
53245	7058
53246	7058
53247	7058
53402	7051
53403	7051
53405	7051
53406	7051
53407	7051
53408	7051
53409	7051
53415	7051
53416	7051
53417	7051
53418	7051
53419	7051
53423	7051
53424	7051
53425	7051
53426	7051
53427	7051
53490	7152
53548	7049
53549	7049
53550	7049
53555	7010
53642	7034
53660	7151
53683	7033
53829	7058
53831	7011
53832	7011
53834	7011
53835	7011
53836	7011
53874	7057
53880	12028
53884	12028
53885	12028
53886	12028
53887	12028
53891	7071, 7072
53892	12026
53894	12026
53899	12026
53915	7071, 7073
53941	7039
53942	7039
54010	9151
54011	9151
54012	9151
54100	8117
54123	9151
54310	7038
54311	7038
54315	12026
54326	12026
54329	12026
54330	12028
54483	12027
54489	12027
54753	7056
54754	7056
54774	7059
55235	7030
55323	2265
55556	2264
55557	2264
55558	2265
55621	7055
55654	7056
55673	2264
55678	7054
55679	7055
55680	7055
55768	7045
55785	7060
55792	7060
55808	7071, 7072
55843	7071, 7072
55927	7071, 7073
55929	7071, 7073
58009	2224, 2227
58010	2224, 2227
58020	2159, 13017
58024	1011, 1018, 1019, 2224, 2226, 2227, 3046, 3047, 3057, 3109
58039	2224, 2227
58040	2224, 2227
58061	2224, 2227
58062	2158
58063	1033
58074	1033, 2158, 2162, 2224, 2225, 2227, 2245, 9039, 13016, 13017
58075	1033, 2158, 2162, 2224, 2225, 13016
58078	13002
58082	2224, 2227
58166	1139
58171	3110
58172	3077
58194	1138, 1139
58195	1139
58201	1138, 1139
58209	2160, 3110
58237	1024
58238	1024
58240	1055
58241	1023, 1024, 1031, 1032, 1042, 1046
58242	2224, 2227
58243	2224, 2227
58244	2224, 2227
58245	2224, 2227
58246	2224, 2227
58247	2224, 2227
58261	1138
58273	1093
58274	1093
58290	9118
58305	9105, 12015
58318	10076, 13008
58336	2158, 2159, 2162
58338	1033, 2158, 2162, 2224, 2225, 2227, 2245, 13015
58342	2151, 2162
58372	2245
58373	9042, 9082
58374	9042, 9082
58376	10007
58380	9005, 9017, 9082
58382	9005, 9013
58392	2224, 2227
58395	2158
58411	3079
58413	12022, 12023
58422	7068
58424	2227, 11004, 11007, 11029
58433	7067, 10007, 10008, 10009, 10011, 10013, 10022, 10074, 11004, 11007, 11029
58436	10007, 10008, 10009, 10011, 10012, 10013, 10022, 10031, 10032, 10033, 10034
58437	2127, 2150, 2162
58438	2127, 2150, 2162
58439	9005, 9017, 9082
58442	2224, 2227
58443	2224, 2227
58445	7020, 7036
58448	1043, 9106
58449	1024
58483	10061
58485	10031, 10032, 10033, 10034
58489	10061
58490	12037
58491	12037
58492	12034, 12037
58493	12034, 12037
58495	9101, 9103, 9119
58509	7019
58510	11029
58511	3050, 3051, 3057
58512	3050, 3055, 3057
58514	9082
58517	2197
58519	11029
58532	11004, 11007, 11014, 11029
58537	10009, 10011, 10013
58538	10009
58539	10007, 10009, 10023, 10024, 10025
58540	2158, 2159
58541	9105
58545	7019
58546	7019
58551	11007, 11014, 11029
58552	11007, 11014, 11029
58558	10008, 10009
58559	10007
58560	1151
58575	2224, 2226, 2227, 13017
58576	2224, 2226, 2227, 13017
58579	2224
58580	2224
58588	11010, 11029
58602	2159
58614	2215
58622	10035
58631	9082
58632	9082
58635	2224, 2227
58636	2224, 2227
58638	2224, 2227
58639	2224
58641	2117, 2119
58644	2224, 2227
58645	13016
58646	2224, 2227
58647	13016
59054	7019
59083	7020, 7031
59131	7020
59220	7153, 7157
59221	7157
59239	7051, 7067, 7074
59250	7051, 7067, 7074
59270	7067
59275	7067
59282	7069
59287	7067
59294	7031
59300	7051
59461	7031
59489	7067
59803	2224, 2227, 13015
59804	2224, 13015
59824	7067, 7124, 13013
59826	7067, 7124
59827	7067, 7124
59828	7067, 7124
59836	2189
59839	2224, 13015
59844	2227
59845	2227

Part Number	Page Number
59848	2224, 2227
59870	7036
59907	7153, 7157
59908	7153, 7157
59909	7153, 7157
59973	7020, 7031, 7036, 7068, 13004
59974	13004
59975	7020, 7031, 13004
59980	10033, 10075, 10076, 13002
59981	10076, 13002
60080	7094
60102	7102
60118	7090, 7105
60124	7130
60195	7085
60196	7086
60197	7090, 7105
60214	7087
60249	7108
60279	7102
60284	7096
60290	7104
60320	7130
60384	7078
60389	7130
60422	7130
60465	7093
60469	7132
60487	7105
60523	7104, 7105
60529	7088
60544	7124
60573	7086
60577	7090, 7105
60601	7090, 7105
60617	9032
60618	9032
60619	9032
60620	9032
60621	7086
60625	7128
60634	7108
60635	7077
60641	7082
60650	7079, 7104, 7105
60700	7127
60705	7102
60713	7080
60729	7105
60736	7104
60742	7087
60755	7089
60771	7128
60774	7130
60775	7130
60798	7133
60799	7133
60805	7163
60842	9032
60843	9032
60850	7097
60851	7082, 7102
60878	7102
60885	7132
60894	7124
60900	7103, 7133
60904	7104
60920	7101
60938	7080, 7104, 7105
61012	7132
61029	7089
61045	7102
61048	7124
61060	7124
61070	7091, 7105
61085	9084
61086	9084
61095	7077
61107	7077, 7104, 7105
61116	9032, 9084
61117	9032, 9084
61118	9032, 9084
61134	7099
61158	7090, 7105
61173	9032
61174	9032
61227	7102
61233	9084
61234	9084
61299	7131
61314	9032, 9084
61320	9033
61362	7095
61368	7104, 7105
61375	7104, 7105
61400	7105
61407	7097
61412	7133
61454	7133
61457	7105
61459	7091
61481	7105
61498	7131
61499	7093
61518	9033
61527	9033, 9084
61530	7091
61556	7127
61626	9042, 9084
61627	9042, 9084
61653	7124
61761	7097
61764	7127
61765	7102
61794	7128
61795	7128
61810	7102
61818	7105
61855	7130
61867	7128
61868	7129
61907	7098
61919	7086
61945	7086
61951	7097
61969	7088
61971	7091
61988	7079
62000	7138, 7145
62001	7138, 7145
62002	7138, 7145
62011	7084
62016	7087
62022	7084
62026	7087
62040	7138, 7145
62048	7084
62049	7102
62050	7090, 7105
62056	7084
62057	7084
62061	7101
62085	7089
62094	7105
62109	7079
62112	7102
62137	7086, 7105
62138	7086, 7105
62157	7138, 7145
62162	7101
62166	7093
62181	7086
62187	7086, 7105
62191	7105
62194	7139
62200	7145
62201	7145
62223	7079
62261	7094
62274	7102
62295	7138, 7145
62303	7138, 7145
62304	7138, 7145
62305	7138, 7145
62306	7138, 7145
62307	7138, 7145
62308	7138, 7145
62309	7138, 7145
62310	7138, 7145
62311	7138
62321	7091
62336	7091, 7105
62341	7139
62345	7105
62384	7099
62409	7095
62418	7104
62420	7141, 7145
62428	7077
62429	7141, 7145
62431	7139, 7145
62437	7099
62513	7145
62514	7142
62524	7145
62526	7145
62527	7145
62531	12005
62576	7097
62613	7128
62627	7101
62652	7142, 7145
62653	7145
62657	7145
62658	7145
62663	7145
62691	7129
62718	7083
62739	7132
62811	7083
62813	7083
62814	7083
62833	7141
62850	7090
62895	7141
62896	7141
62923	7143
62934	7141
62935	7141, 7145
63009	7083
63010	7083
63011	7083
63012	7083
63038	7093
63044	7145
63062	7142
63064	7145
63096	7083
63097	7106
63119	7106
63127	7079
63155	7145
63232	7112
63233	7091
63239	7106
63242	7090
63256	7142
63263	7145
63301	7100
63306	7078, 7104, 7105, 7106
63313	7112
63336	7145
63365	7078, 7104, 7105
63391	7103
63407	7111
63414	7131
63417	7089
63431	7139
63445	7082
63450	7160
63453	7145
63454	7145
63455	7145
63459	7143
63464	7145
63475	7087, 7105
63476	7089
63477	7086, 7087, 7105
63512	7089
63520	7112
63525	7098
63537	7078
63538	7083
63539	7078
63548	7145
63549	7145
63555	7082
63561	7139
63562	7139
63564	7139
63571	7143
63596	7087
63598	7145
63602	7128
63603	7098
63604	7082
63608	7086
63609	7078
63621	7139
63625	7146
63636	7141
63646	7087
63648	7077
63658	7141
63663	7142
63674	7078
63677	7077
63696	7088
63697	7087
63699	7102
63703	7090
63710	7144
63711	7144
63713	7144
63744	7144
63748	7089
63751	7086
63755	7095
63812	7111
63816	7143
63837	7090
63849	7095
63854	7113
63901	7083
63933	7113
63959	7086
63968	7095, 7096
63969	7095, 7096
63982	7098
63994	7095, 7096
65476	3055
65780	9082
66098	9101
66099	9101
66100	9101
66101	9101, 12012
66102	9101
66103	9101
66104	9101
66105	9101
66106	9101
66107	9101
66108	9101
66109	9101
66180	9102
66181	9102
66182	9102
66183	9102
66253	9114
66254	9114
66255	9114
66256	9114
66259	9114
66260	9114
66261	9114
66262	9114
66331	9101
66332	9101
66358	9101
66359	9101
66360	9101
66361	9101
66393	9101
66394	9101
66399	9101
66400	9101
66405	9101
66406	9101
66424	9101
66425	9101
66428	9101
66429	9101
66459	9104
66460	9104
66461	9104
66468	9104
66470	9104
66471	9104
66473	9104
66504	1043, 9106
66505	1043, 9106
66506	1043, 9106
66507	1043, 9106
66563	9101, 9155
66564	9101
66565	9101, 9155
66566	9101
66569	9107
66570	9107
66597	9101
66598	9101, 9155
66601	9101, 9155
66602	9101
66682	1043, 9106
66683	1043, 9106
66740	9114
66741	9114
67941	3048
68022	7072
68026	7151, 7152, 7153
68030	7155, 7156
68031	7156
68032	7155, 7156
68038	7156
68041	7156
68042	7155, 7156
68043	7155, 7156
68044	7155, 7156
68045	7156
68046	7155, 7156
68047	7155, 7156
68048	7156

Products for Industrial & Commercial Applications

Dimensions are shown for reference purposes only.

Dimensions are in inches and millimeters unless otherwise specified. Values in brackets are metric equivalents.

Specifications subject to change.

Technical Support Center
1-800-522-6752
www.tycoelectronics.com

Part Number	Page Number
68049	7156
68064	7152
68068	7072, 7151, 7155, 7156, 7157
68073	7036
68080	7155, 7156
68081	7155, 7156
68082	7155, 7156
68084	7155, 7156
68085	7155, 7156
68086	7156
68093	7156
68100	7155, 7156
68101	7155, 7156
68102	7155, 7156
68104	7156
68105	7155, 7156
68106	7155, 7156
68114	7036
68130	7155, 7156
68131	7155, 7156
68132	7156
68133	7156
68135	7151
68140	7156
68141	7155, 7156
68169	7074
68192	7155, 7156
68240	7019
68241	7019
68242	7005, 7019
68243	7019, 7020
68245	7072
68247	7068
68248	7068
68249	7068
68250	7005, 7006, 7020, 7068, 13007
68257	7151
68265	12029
68268	7072
68282	7036
68284	7153, 7157
68285	7068
68296	12029
68312	7020
68313	7020
68321	12029
68325	7068
68343	7067
68347	12029
69005	7051, 7072, 7073, 7151, 7155, 7156, 7157
69011	7051
69012	7051
69015	7020, 7031, 7068, 7155, 7156, 7157
69051	7068
69065	7020, 7031, 7036
69066	7068
69067	7020, 7031, 7036
69069	7020, 7031
69082	7020, 7036, 7157
69097	7020, 7031
69099	7020, 7031, 7036, 7155, 7156, 7157
69120	7020, 7030, 7031, 7068, 7153, 7155, 7156, 7157, 13004
69133	7036
69134	7036
69140	10008, 10011, 10074
69141	10009, 10011
69145	7072
69150	7051
69151	7051
69152	7051
69163	7067
69177	7151, 7152
69186	9118
69216	7020, 7030, 7031
69217	7020, 7030, 7031
69218	7020, 7031
69220	9118
69222	9118
69223	10008, 10011, 10013
69224	10011
69227	9118
69238	7072
69239	7072
69244	7072
69245	10007, 10011, 10012, 10025
69248	9118
69272	7024
69303	7072
69315	9118
69319	7072, 7073
69327	7030
69328	7030
69329	7030
69331	10008
69335	7072
69344	7067
69354	7020
69355	7020, 7031, 7151
69360	9118
69363	7019
69365	7051, 7067, 7072, 7073
69373	9118
69408	10007, 10012
69410	10013
69422	10007, 10011, 10012
69424	10008, 10011
69429	10008
69430	7072, 7073
69463	7068
69471	10007, 10012
69477	10007, 10009, 10011, 10012, 10013, 10074
69478	10008, 10011, 10013
69652	10009
69653	7036
69656	9116, 9117
69669	10007, 10009, 10011, 10012, 10013
69672	9118
69690	9116, 9117
69692	7030
69693	7030
69710	7019, 7030, 7067, 7072, 7073, 9005, 9017, 9042, 9082, 9111, 9117, 9118, 9119, 10007, 10008, 10009, 10010, 10011, 10012, 10013, 10022, 10031, 10032, 10033, 10074, 12022, 12023, 12034, 12037, 13002
69727	10008, 10011, 10013
69731	7030
69732	7030
69733	7030
69734	7030
69735	7030
69820	7072
69872	7067
69873	7067
69874	7067
69875	7006, 7019, 7020, 7030, 7031, 7067, 7072, 7073, 7074, 7124, 9105, 13007
69877	7067, 7124
69897	7067
69902	7019
69903	7019
69904	7019
69905	7019
69911	7020
69912	7020
69913	7020
69914	7020
69930	7031
69931	7031
69932	7031
69936	7030
69937	7030
69950	7072, 7073
69951	7072, 7073
69952	7072, 7073
69954	7031
69955	7031
69956	7031
69959	7068
69973	7072
69999	7155, 7156
74100	8111
81665	9144, 9145, 9147, 9148, 9149, 9150
82276	9082
84069	9031
84405	1144
84616	2239
85223	1018
85449	2162
85493	2165
85829	2173
85969	2119
86016	2119
86147	2172
86181	2165, 2166, 2167
86182	2172
86286	2089, 2092, 2093, 2094, 2097, 2103, 2104, 2107, 2109, 2120, 2121, 2122, 2123, 2124, 2125, 2153, 2154, 4052
86434	2165
86477	2165
86479	2051
86480	2165
86492	2119
86557	4040
86561	4040
86566	4040
86571	4040
86602	4053
86603	4053
86655	4040
86656	4040
86657	4040
86658	4040
87003	2165
87025	2169
87046	2119
87077	2120, 2121, 2122, 2123, 2124, 2125, 2153, 2154, 4052
87105	2165
87107	2117
87116	2171
87159	2171
87160	2173
87185	4053
87195	2119
87215	2050
87220	2048
87224	2048
87227	2050
87230	2051
87232	2049
87233	2049
87247	2173
87258	2174
87269	2175, 2176
87270	2176
87278	2175
87309	2119
87316	2165
87456	2122
87474	2080
87499	2120
87523	2119
87579	2076
87587	2074
87589	2073
87631	2124
87666	2119
87667	2119
87733	2124
87743	2114
87756	2119
87772	2165
87809	2119
87879	2094
87922	2124
87977	2123
87985	2166
87986	2166
87987	2167
87988	2167
87989	2166
87995	2167
88017	4040
88048	4040
88117	4039
88179	4048
88189	4046
88190	4046
88450	4011
88616	4054
88617	4054
88618	4054
88619	4054
88637	4048
88859	4044
88976	4039
88997	4039
90066	9032, 9082, 9101, 9103
90067	9101, 9103, 9222
90120	7102
90121	9108
90122	9108
90123	9032, 9033, 9082
90124	9032, 9082
90136	9105
90140	9114
90145	9114
90166	7102
90185	7124
90202	2119, 2162
90204	7103
90222	4040
90225	9101, 9222
90230	9105
90231	9105
90240	7124
90246	7124
90247	9042, 9082
90248	7124
90249	9105
90250	9105
90265	1043, 9107
90273	4059
90274	2168, 2178
90296	9005, 9017, 9018, 9024, 9082
90298	9005, 9017, 9018, 9082
90299	9005, 9017, 9018, 9082
90300	9005, 9017, 9018, 9082
90301	3110
90302	1043, 9106
90308	2175, 2178
90310	9101, 9119, 9155, 9222
90313	4040
90325	9070, 9082
90326	9070, 9082
90328	2168, 2178
90331	9101, 9155, 9222
90347	12022
90348	12023
90349	12022, 12023
90363	9119
90374	9106
90378	4040
90381	2117
90405	1043, 9107
90406	1043, 9106
90417	2119, 2162
90418	2117, 2119, 2162, 3110
90430	1025
90471	2215
90546	9082
90547	9082
90548	9082
90566	7019
90574	9082
90575	9082
90707	9052, 9060, 9082
90710	9052, 9060, 9082
90711	9052, 9060, 9082
90716	9101
90753	3046
90755	3046
90757	3046
90758	9082
90759	9082
90760	9082
90800	1025
90869	9078, 9082
90870	9078, 9082
90871	9045, 9082
90872	9045, 9082
91002	9005, 9017, 9024, 9045, 9078, 9101
91016	9210

Products for Industrial & Commercial Applications

Dimensions are shown for reference purposes only.

Dimensions are in inches and millimeters unless otherwise specified. Values in brackets are metric equivalents.

Specifications subject to change.

Technical Support Center
1-800-522-6752
www.tycoelectronics.com

Part Number	Page Number
91019	9114, 9119
91046	2160
91047	4043, 4044, 4046, 4059
91065	2162
91067	1102, 9110, 9119
91085	1019, 1135, 1136, 2159, 2259, 3110, 4006, 4008, 4009, 13015, 13016
91092	4040, 4043, 4044, 4046
91093	4040, 4048, 4049
91104	2175, 2178
91112	1019, 1136, 2159, 2224, 2226, 2227, 2259, 3110, 4006, 4008, 4009, 9039, 13016
91136	9119
91164	1092, 1094
91165	1092, 1094
91166	1092, 1094
91167	1092, 1094
91168	1092, 1094
91169	2086
91170	2086
91171	2086
91200	4042, 4048, 4049, 4059
91232	1027, 1028
91241	4027
91285	1025, 1043, 9106, 9119
91287	13015
91291	1018
91292	4059
91293	1011, 1019
91295	1011, 1019, 4004
91300	11024
91308	12034
91316	3046
91326	3046
91327	3046
91415	2159
91417	2140, 2142, 2145, 2151, 2162
91501	9067
91502	9067
92419	2160
100141	3025
100143	3025
100145	3027
100147	3027
100159	3025
100161	3027
100525	3039
100526	3039
100623	3027
100624	3027
100668	3025
100669	3025
102090	2170
102095	2117
102099	2168
102100	2168
102102	2168
102103	2168
102104	2168
102106	2168
102107	2117
102114	2113
102128	2119
102153	4026
102154	4026
102155	4026
102156	4026
102159	4029
102160	4029
102161	4029
102162	4029
102185	2155, 2156
102198	4026
102202	2071
102203	2072
102312	2155, 2156, 4026, 4029, 4031
102316	2119
102320	4026, 4029, 4031
102321	4026
102322	4029
102338	2113
102348	2117
102387	2125
102393	2153
102394	2153
102395	2157
102396	2156
102398	2153
102399	2157
102448	2153
102449	2157
102523	2072
102536	2156
102537	2156
102548	2119
102557	2085
102567	2110
102570	2077
102589	2112
102617	2076
102618	2073
102619	2074
102641	2157
102642	2157
102681	2156
102690	2111
102692	2110
102694	2154
102699	2084
102802	2112
102824	2111
102861	2156
102898	2082
102917	2119
102972	2054, 2062
102973	2056, 2062
102974	2055
102975	2057
102976	2054, 2062
102977	2056, 2062
102979	2057
103080	2071
103148	2055
103149	2057
103164	2078
103166	2076
103167	2077
103168	2073
103169	2074
103171	2119
103185	2054, 2062
103186	2056, 2062
103233	2083
103239	2054, 2062
103240	2056, 2062
103308	4013
103309	4013
103310	4015
103311	4015
103321	2054, 2062
103322	2056, 2062
103323	2055
103324	2057
103325	2055
103326	2057
103327	2054, 2062
103328	2056, 2062
103329	2055
103330	2057
103361	2072
103414	2071
103455	2119
103573	2142
103634	2142
103635	2142
103638	2140
103639	2140
103644	2133
103645	2133
103648	2134
103653	2136
103669	2140
103670	2140
103672	2142
103673	2142
103680	2138
103688	2131
103735	2140
103737	2054
103741	2054
103747	2054
103759	2055
103765	2055
103777	2056
103783	2056
103801	2057
103817	2052
103904	2142
103906	2142
103908	2140
103911	2038
103916	2035
103944	2136
103945	2136
103946	2136
103947	2136
103948	2136
103949	2136
103951	2137
103956	2133
103957	2133
103958	2133
103959	2133
103960	2133
103961	2133
103968	2134
103969	2134
103974	2131
103975	2131
104068	2032
104069	2031
104071	2030
104072	2127, 2150, 4012
104074	2029
104076	2033
104078	2038
104118	2034
104128	4020
104130	4017
104178	2034
104186	2033
104192	2037
104196	2037
104257	2133
104313	4020
104315	4017
104317	2075
104319	2079
104334	2058
104338	4024
104339	4024
104340	4023
104341	4023
104345	2058
104346	2058
104350	2059
104351	2059
104352	2059
104353	2060
104354	2060
104355	2060
104361	2146
104362	2145
104363	2145
104427	2058
104432	2059
104433	2059
104439	2135
104450	2143
104477	2031
104479	2127, 2150
104480	2127, 2150
104481	2127, 2150
104482	2128
104500	2139
104503	2137
104505	2151
104506	2151
104549	2040
104550	2040
104652	2023
104655	2024
104656	2024
104666	2032
104673	2142
104693	2024
104744	2038
104809	2144
104891	4003
104892	4003
104893	4003
104894	2026
104895	2026
104959	2133
106012	3034
106014	3034
106015	3034
106081	3025
106164	3025
106165	3025
106242	3109
106303	3025
106509	3025
106510	3025
106527	9087
106528	9087
106529	9087
106773	3036
106774	3036
106775	3036
106901	11011
107917	2119
111008	4031
111105	4031
111196	4006
111293	4031
111338	4031
122271	7020, 7030, 7031
122300	2087, 2177, 13021
122559	3046
122561	3046
122562	3046
122563	3046
125905	1102
126195	1102, 9110
126961	4027
145031	2010
145089	2015
145098	2004
145113	2006
145154	2004
145165	2005
145166	2006
145167	2004
145168	2005
145169	2006
145246	2005
146089	2062
146090	2062
146128	2069
146130	2069
146131	2069
146132	2069
146134	2069
146250	2062
146251	2062
146252	2062, 2066
146253	2062, 2066
146254	2062, 2066
146255	2062
146256	2062, 2066
146257	2062, 2066
146258	2066
146260	2066
146261	2066
146262	2066
146264	2066
146265	2066
146266	2066
146268	2066
146269	2066
146270	2066
146272	2066
146273	2066
146274	2062, 2064
146275	2062
146276	2062, 2064
146277	2062, 2064
146278	2062, 2064
146279	2062
146280	2062, 2064
146281	2062, 2064
146282	2064
146284	2064
146285	2064
146286	2064
146288	2064
146289	2064
146290	2064
146292	2064
146293	2064
146294	2064
146296	2064
146297	2064
146304	2065
146305	2065
146306	2065
146307	2065
146308	2067
146309	2067
146310	2067
146311	2067
146850	2062
146851	2062
146852	2062
146853	2062
146854	2062
146855	2062
146856	2062
146857	2062
146858	2062
146859	2062
146860	2062

Products for Industrial & Commercial Applications

Dimensions are shown for reference purposes only.

Dimensions are in inches and millimeters unless otherwise specified. Values in brackets are metric equivalents.

Specifications subject to change.

Technical Support Center
1-800-522-6752
www.tycoelectronics.com

Part Number	Page Number
146861	2062
146868	2062
146869	2062
146870	2062
146871	2062
147047	2149
147050	2149
147102	2104
147105	2105
147109	2103
147278	2147
147323	2147
147324	2147
147327	2099
147377	2040
147378	2040
147381	2024
147382	2024
147383	2024
147384	2023
147387	2040
147420	3098
148002	3090
148019	3090
148020	3091
148032	3090
148057	3094
148059	3094
148116	3091
148117	3091
148123	3090
148167	3094
148221	3099
148248	3100
148249	3100
148250	3099
148292	3103
148295	3103
148296	3103
148304	3090
148306	3090
148330	3090
148354	3100
148359	3103
148360	3103
148375	3099
148381	3098
148384	3098
148389	3090
148407	3100
148409	3100
148410	3099
148411	3097
148412	3097
148413	3097
148414	3097
148416	3099
148417	3098
148418	3098
148419	3098
148421	3098
148422	3098
148423	3098
148424	3098
148425	3098
148427	3098
148430	3100
148431	3100
148432	3099
148433	3099
148445	3096
148452	3085, 3096
148454	3109
148472	3090
148495	3085
148502	3094
148511	3091
148513	3099
148521	3092
148527	3096
148553	3090
149009	3005
149011	3005
149012	3005
151321	7084
154717	7111
154718	7111
154719	7111
160759	7111
164045	3106
164159	9103
164160	9103
164161	9103
164162	9103
164163	9103
164164	9103
164306	3106
165085	7061
165167	7061
165171	7061
166095	3106
166096	3106
166555	3108
166594	3108
166648	3108
166649	3108
166717	3107
166719	3107
166727	3108
166728	3108
166732	3107
166733	3107
166951	3107
167892	2266
169400	13002
169480	3110
170204	2248
170205	2248
170262	2248
170354	2249
170369	2249
170370	2249
170376	2252
170377	2252
170429	2252
170430	2252
171636	9060, 9084
171637	9060, 9084
171638	9060
171639	9060
171822	2248, 2252
171825	2250
171826	2250
172142	2249
172156	9059, 9061
172157	9059, 9061
172158	9059, 9061
172159	9059, 9061
172160	9059, 9061
172161	9059, 9062
172162	9059, 9062
172163	9059, 9062
172164	9059, 9061, 9065
172165	9055, 9057, 9059, 9061, 9063, 9065
172166	9055, 9057, 9059, 9061, 9063, 9065
172167	9055, 9056, 9057, 9059, 9061, 9063, 9064, 9065
172168	9055, 9056, 9057, 9059, 9061, 9063, 9064, 9065
172169	9055, 9056, 9059, 9062, 9063, 9064
172170	9055, 9056, 9059, 9062, 9063, 9064
172171	9055, 9056, 9059, 9062, 9063, 9064
172211	2252
172213	2252
172233	9059, 9061
172234	9059, 9061
172327	9059, 9061
172328	9059, 9061
172329	9059, 9061
172330	9059, 9061
172331	9059, 9061
172332	9059, 9062
172333	9059, 9062
172334	9059, 9062
172335	9059, 9061
172336	9059, 9061
172337	9059, 9061
172338	9059, 9061
172339	9059, 9061
172340	9059, 9062
172341	9059, 9062
172342	9059, 9062
172343	9059, 9061
172344	9059, 9061
172732	2251
172807	9059
172808	9059
172809	9059
172958	9059
172971	9060
173924	9012, 9027
173925	9012, 9027
173926	9012, 9027
173956	9059
173957	9059
173977	2241
173979	2242
173981	2242
173983	2244
174552	9031, 9040
174670	9060
174804	9031, 9040
175332	9031
175473	2230
175474	2229
175487	2243
175677	1106, 1109
175887	1108
176137	2012
176139	2017
176793	1107, 1109
176982	4050, 4051
177983	2232, 2237
177984	2232, 2233
177985	2237
177986	2233, 2234, 2235, 2236
178238	1108
179009	2232, 2238
179010	2232, 2239
179029	2232, 2234
179030	2232, 2235
179031	2232, 2236
179180	2238
179694	2241
188224	3027
188637	3025
188836	3027
189721	7019, 9030, 7031, 7151, 9101, 9103, 9105, 9106, 9108, 9111, 9114, 9116, 9117, 9118, 9155, 10074, 12037
189722	7030, 7031, 7151, 9101, 9103, 9105, 9106, 9108, 9111, 9114, 9116, 9117, 9118, 9155
189727	9060
189767	7031, 7151
189928	9101, 9103, 9105, 9106, 9108, 9114, 9116, 9117, 9118, 9155, 12037
193457	9113
193458	9113
193534	9113
193535	9113
193642	9113
193643	9113
193796	9013
193797	9013
193814	9113
193839	9013
193841	9013
193842	9013
193844	9109
193846	9109
193990	9115
193991	9115
194002	9014
194009	9014
194010	9014
194012	9014
194013	9014
194014	9014
194017	9014
194018	9014
194081	9110
194083	9110
200277	9177, 9179, 9181, 9183, 9185, 9187, 9189, 9191, 9195
200333	9105
200336	9105
200346	9176, 9178, 9180, 9182, 9184, 9186, 9188, 9190, 9193
200389	9176, 9177, 9180, 9181, 9184, 9185, 9188, 9189, 9213
200390	9176, 9177, 9180, 9181, 9184, 9185, 9188, 9189, 9213
200512	9176, 9178, 9180, 9182, 9184, 9186, 9188, 9190, 9195
200514	9182, 9190, 9217
200517	9182, 9190, 9217
200532	9183, 9191, 9217
200686	9176, 9178, 9184, 9186, 9220
200730	9179, 9183, 9187, 9220
200802	9176
200821	9033, 9211
200833	9176, 9177, 9178, 9179, 9180, 9181, 9182, 9183, 9184, 9185, 9186, 9187, 9188, 9189, 9190, 9191, 9213
200835	9176, 9177, 9178, 9179, 9180, 9181, 9182, 9183, 9184, 9185, 9186, 9187, 9188, 9189, 9190, 9191, 9213
200838	9176, 9178, 9180, 9182, 9184, 9186, 9188, 9190, 9195
200867	9210
200868	9210
200870	9210
200871	9210
200874	4053, 9211
200875	9211
200893	9101, 9104, 9105
201037	9179, 9183, 9187, 9191, 9197
201046	9179, 9183, 9187, 9191, 9213
201047	9179, 9183, 9187, 9191, 9213
201087	9210
201088	9210
201089	9178, 9179, 9182, 9183, 9186, 9187, 9190, 9191, 9211
201092	9178, 9179, 9182, 9183, 9186, 9187, 9190, 9191, 9211
201131	9183, 9191, 9217
201142	9117, 9118
201143	9118
201144	9118
201145	9118
201146	9118
201165	9180, 9188, 9218
201169	9180, 9188, 9218
201182	9177, 9179, 9183, 9185, 9187, 9220
201224	9176, 9178, 9182, 9184, 9186, 9220
201227	9180, 9188, 9218
201229	9176, 9178, 9182, 9184, 9186, 9220
201237	9176, 9178, 9182, 9184, 9186, 9220
201298	9176, 9178, 9180, 9184, 9186, 9188, 9193
201302	9177, 9179, 9181, 9183, 9185, 9187, 9189, 9191, 9195
201310	9179, 9183, 9187, 9191, 9197
201311	9179, 9183, 9187, 9191, 9197

Part Number	Page Number
201328	9105
201330	9105
201332	9105
201334	9105
201345	9179, 9183, 9187, 9191, 9197
201346	9179, 9183, 9187, 9191, 9215
201349	9178, 9186, 9215
201350	9178, 9182, 9186, 9190, 9215
201355	9176, 9178, 9180, 9184, 9186, 9188, 9193
201356	9176, 9178, 9180, 9182, 9184, 9186, 9188, 9190, 9193
201357	9176, 9178, 9180, 9182, 9184, 9186, 9188, 9190, 9195
201358	9177, 9179, 9181, 9183, 9185, 9187, 9189, 9191, 9195
201359	9176, 9178, 9180, 9182, 9184, 9186, 9188, 9190, 9195
201360	9180, 9188, 9218
201363	9176, 9178, 9180, 9184, 9186, 9188, 9214
201364	9179, 9183, 9187, 9191, 9214
201368	9179, 9183, 9187, 9191, 9215
201369	9179, 9183, 9187, 9191, 9214
201378	9180, 9188, 9218
201384	9180, 9188, 9218
201388	9210
201389	9210
201390	9179, 9183, 9187, 9191, 9215
201413	9182, 9183, 9190, 9191, 9210
201414	9182, 9183, 9190, 9191, 9210
201443	9183, 9191, 9217
201460	9180
201467	9180, 9188, 9218
201468	9180
201469	9180, 9188, 9218
201470	9181
201486	9181
201501	9210
201511	9118
201512	9118
201532	9191, 9198
201540	9213
201568	9105
201570	9105
201571	9182, 9190, 9217
201576	9182, 9190, 9217
201578	9105
201580	9105
201611	9105
201613	9105
201692	9177, 9179, 9181, 9183, 9185, 9187, 9189, 9191, 9198
201766	9177, 9179, 9183, 9185, 9187, 9220
201785 201785	9176, 9178, 9180, 9184, 9186, 9188, 9214
201786	9176, 9178, 9180, 9182, 9184, 9186, 9188, 9190, 9214
201827	9178, 9179, 9186, 9187, 9210
201828	9178, 9179, 9186, 9187, 9210
201843	9176, 9178, 9184, 9186, 9220
201845	9176, 9178, 9182, 9184, 9186, 9220
201846	9176, 9178, 9182, 9184, 9186, 9220
201847	9177, 9179, 9183, 9185, 9187, 9220
201848	9179, 9183, 9187, 9220
201849	9179, 9183, 9187, 9220
201910	9210
201911	9210
201918	9176, 9212
201921	9176, 9177, 9180, 9181, 9184, 9185, 9188, 9189, 9212
201922	9176, 9177, 9180, 9181, 9184, 9185, 9188, 9189, 9212
201923	9180, 9184, 9188, 9212
201925	9176, 9177, 9180, 9181, 9184, 9185, 9188, 9189, 9212
201926	9176, 9177, 9180, 9181, 9184, 9185, 9188, 9189, 9212
202095	9215
202096	9215
202110	9191, 9219
202119	9191, 9215
202135	9177, 9179, 9181, 9183, 9185, 9187, 9189, 9191, 9195
202165	9215
202169	9191, 9219
202173	9191, 9213
202174	9191, 9213
202236	9102
202237	9102
202383	9183, 9191, 9217
202394	9179, 9183, 9187, 9191, 9214
202395	9191, 9217
202417	9108
202418	9108
202421	9108
202422	9108
202434	9178, 9182, 9186, 9190, 9214
202483	9219
202507	9105
202508	9105
202711	9183, 9191, 9217
202713	9183, 9191, 9217
202725	9105
202726	9105
202757	9176, 9178, 9184, 9186, 9193
202758	9176, 9178, 9184, 9186, 9193
202798	9191, 9219
202799	9191, 9199
202800	9191, 9199
203432	9176, 9178, 9184, 9186, 9220
203622	9196
203743	9191, 9214
203744	9191, 9215
203956	9195
203964	9213
203966	9213
203975	9183, 9191, 9217
204087	9182, 9190, 9217
204099	9213
204173	9183, 9191, 9217
204219	9105
204258	9176, 9178, 9184, 9186, 9214
205058	9196
205089	1102
205090	1102
205161	1096
205162	1096
205163	1096
205164	1096
205165	1096
205166	1096
205167	1096
205168	1096
205169	1096
205170	1096
205201	1043, 9107
205202	1043, 9107
205203	1040
205204	1040
205205	1040
205206	1040
205207	1040
205208	1040
205209	1040
205210	1040
205211	1040
205212	1040
205310	1043, 9107
205311	1043, 9107
205408	1096
205412	1096
205413	1096
205414	1096
205415	1096
205416	1096
205417	1096
205418	1096
205419	1096
205420	1096
205434	1040
205436	1040
205439	1040
205718	1052
205729	1052
205730	1052
205731	1052
205732	1052
205817	1059
205818	1059
205838	9131, 9133
205839	9131
205840	9131
205841	9131
205842	9131
205843	9131
205933	1065
205980	1058
206036	9115, 9124, 9136, 9149
206037	9115, 9124, 9128, 9136, 9149
206038	9131
206039	9131
206043	9124, 9149
206044	9124, 9149
206060	9124, 9128, 9149
206061	9124, 9149
206062	9139
206070	9139, 9147, 9148, 9154
206125	9133
206126	9133
206127	9133
206136	9136
206137	9136
206138	9139
206150	9124, 9149
206151	9124, 9149
206152	9131
206153	9124, 9149
206207	9136
206226	9136
206227	9136
206304	9152
206305	9124, 9149
206306	9124, 9149
206322	9139, 9147, 9148, 9154
206358	9139
206390	1052
206393	1052
206403	9150
206404	9128
206425	9136
206426	9136
206429	9124, 9149
206430	9124, 9149
206433	9131
206434	9131
206437	9131
206438	9131
206455	9132
206458	9133
206460	9133
206471	1048
206472	1048
206478	1052
206485	9131
206486	9131
206508	9142
206509	1065, 9142
206512	9139, 9152
206514	1061
206516	9128
206518	9128
206552	9128
206554	9128
206612	9138
206613	9138
206705	9124, 9149
206708	9124, 9149
206763	9239
206837	9124, 9149
206838	9124, 9149
206852	9131, 9132
206903	9151
206934	9126
206942	1061
206966	9139
207008	9139
207015	9236, 9239
207016	9236, 9239
207017	9236, 9239
207018	9236, 9239
207019	9236, 9239, 9252
207020	9236, 9239, 9252
207052	9152
207088	9236
207119	9239
207120	9239
207121	9239
207152	9109, 9236, 9239
207153	9109, 9236, 9239
207158	9239
207216	9132
207234	9183, 9191, 9210
207235	9183, 9191, 9210
207292	9127
207299	9141
207303	9126
207304	9236, 9239
207305	9236, 9239
207345	1051
207359	9242, 9244
207360	9242, 9244
207365	9244
207369	9132
207370	12003
207373	12003
207376	9242, 9244
207377	9242, 9244
207378	9244
207396	9242, 9244
207397	9242, 9244
207398	9244
207439	9236, 9239
207440	9236, 9239
207441	9239
207442	9236, 9239
207443	9236, 9239
207444	9239
207445	9151
207446	9151
207463	1040
207464	1040
207467	1051
207470	1051
207473	1051
207485	9138
207486	9138
207489	9141
207490	9141
207496	9239
207507	12003
207508	12003
207516	1040
207524	9239
207526	9239
207528	9239
207530	9239
207532	9239
207534	9239
207535	9242

Products for Industrial & Commercial Applications

Dimensions are shown for reference purposes only.

Dimensions are in inches and millimeters unless otherwise specified. Values in brackets are metric equivalents.

Specifications subject to change.

Technical Support Center
1-800-522-6752
www.tycoelectronics.com

Part Number	Page Number
207541	9244
207542	9242, 9244
207543	9242, 9244
207544	9244
207563	9254
207565	9254, 9255, 9256, 9257, 9258, 9259
207567	9254, 9258
207571	9258
207573	9256
207575	9256
207583	9244
207584	9244
207597	9142
207599	9244
207600	9236
207601	9236
207602	9236
207603	9236
207604	9236
207608	9244
207609	9244
207610	9244
207611	9244
207612	9244
207613	9244
207614	9244
207615	9244
207619	9213
207654	9247
207661	1040
207719	1059, 1090, 1091
207774	9140
207807	9254, 9258
207808	9255, 9258
207825	9126
207826	1091
207827	1091
207828	1091
207829	1091
207830	1091
207841	1091
207845	9254, 9258
207846	9254
207853	9254, 9258
207871	1058
207872	1059
207890	9127
207901	9254, 9258
207902	9254
207908	1051
207952	1059, 1090, 1091
207953	1059
207982	9254, 9258
208006	1090
208007	1090
208008	1090
208009	1090
208010	1090
208062	9252
208063	9252
208069	1094
208089	1094
208099	9247
208100	9247
208101	1063
208116	9247
208117	9247
208130	9124
208131	9124
208132	9126
208209	9226
208210	9226
208211	9227
208223	9126
208224	9127
208233	9126
208283	9127
208333	9250
208334	9250
208335	9251
208337	9144, 9259
208338	9144, 9259
208400	9247
208403	9247
208404	9247
208457	9157
208459	9157
208470	9157
208471	9157
208472	9158
208473	9158
208474	9161
208475	9161
208476	9160
208477	9160
208478	9166
208479	9166
208480	9166
208481	9166
208482	9163
208483	9163
208484	9164
208485	9164
208486	9158
208487	9158
208488	9157
208489	9157
208490	9160
208491	9160
208492	9161
208493	9161
208494	9163
208495	9163
208496	9164
208497	9164
208530	9257, 9259
208538	9257
208546	9257, 9259
208550	1100
208551	1100
208552	1100
208627	9250
208628	9250
208652	9151
208657	9132
208677	9257, 9259
208678	9257, 9259
208680	9151
208697	12005
208714	9157
208715	9157
208716	9158
208717	9158
208718	9157
208719	9157
208720	9158
208721	9158
208742	1100
208743	1100
208744	1100
208800	9151
208810	1100
208811	1100
208945	9169
208979	12005
211068	9257
211076	9242
211102	9124
211103	9124
211108	9247
211111	1100
211112	1100
211149	9226
211150	9226, 9231
211159	1101
211161	1101
211398	9125
211399	9125
211400	9125
211401	9125
211580	9250, 9251
211758	9226
211759	9226
211766	9125
211767	9125
211768	9125
211769	9125
211770	9125
211771	9125
211772	9125
211773	9125
211824	9138
211825	9138
211839	9124
211870	9151
211882	9124
211903	9169
211904	9169
211908	9124
212007	1101
212008	1101, 9112
212013	1101
212014	1101, 9112
212059	1100
212491	1100
212498	1100
212502	1100
212506	1100
212510	1100
212514	1100
212518	1100
212522	1100
212526	1100
212530	1100
212534	1100
212538	1100
212542	1100
212608	9226
212609	9226
212618	9105
212630	9247
212810	9203
213062	1101
213283	9227
213289	9204
213300	9206
213426	9113, 9227
213427	9113, 9227
213473	9205
213485	9151
213499	9113, 9227
213500	9113, 9227
213513	9204
213522	9206
213524	9205
213550	9205
213552	9112
213558	9226
213567	9112
213570	9154
213571	9154
213574	9203
213581	9136
213588	9126
213598	12006
213603	9155
213605	9155
213650	9154
213651	9154
213652	9154
213662	9112
213667	9155
213668	9155
213671	9155
213672	9226
213684	9208
213685	9208
213713	9227
213727	12004, 12006
213729	9127
213737	9112
213738	9226
213740	9112
213748	9226
213749	9226
213750	9112
213752	9227
213766	9235
213768	9235
213779	9226
213780	9126
213781	9127
213782	9126
213784	9226
213788	9251
213792	9236
213793	9236
213794	9236
213795	9236
213796	9236
213797	9236
213798	9126
213799	9195
213800	9178, 9180, 9182, 9184, 9186, 9188, 9190, 9195
213801	9195
213802	9178, 9180, 9182, 9184, 9186, 9188, 9190, 9195
213803	9209
213804	9209
213805	9209
213806	9203
213807	9203
213808	9204
213809	9205
213810	9124, 9125, 9131, 9136, 9147, 9148
213811	9124, 9131
213812	9124, 9125, 9131, 9136, 9138
213813	9124, 9125
213816	2265
213823	9169
213824	9226
213825	9127
213826	9127
213827	9127
213828	9127
213841	9111
213843	9111
213845	9111
213847	9111
213848	9124
213849	9124
213850	9124
213851	9124
213852	9125
213853	9125
213854	9126
213855	9126
213856	9127
213857	9126
213858	9127
213859	9126
213860	9124
213862	9124
213864	9124
213866	9124
213868	9125
213870	9125
213878	12005
213881	9226
213882	9227
213883	9227
213889	9147
213890	9147
213893	9148
213894	9148
213899	9147, 9150
213900	9148, 9150
213902	9147, 9148
213904	9147, 9148
213905	9147
213906	9148
213908	9227
213919	9150
213920	9150
213925	9150
213926	9150
213928	9154
213931	9207
213932	9207
213933	9151
213982	9140
215079	2255
215083	2258
215460	2256
215464	2257
215614	3094
215781	3094
215783	3094
215912	3094
215913	3094
215950	3094
215951	3094
217200	7019, 7030, 7067
217201	9101, 9103, 9106, 9155
217203	7019
217204	7019
217206	7031
217600	2087, 2177, 13022
217602	3041, 3046
217603	3042
217923	7151
220000	10009
220009	10007, 10011, 10012
220015	10009, 10022, 10023, 10031, 10032, 10033, 10074
220026	10007, 10010, 10011, 10012
220043	10009
220045	10022, 10023, 10024, 10025, 10031, 10032, 10033
220062	10031, 10032, 10033
220088	10009
220152	10007, 10008, 10009
220187	10007, 10008, 10009, 10011, 10013, 10022
220189	10008, 10010, 10011, 10013, 10023, 10024, 10025
220211	13023
220217	10007, 10008, 10009, 10011, 10012, 10013, 10022
220220	10033, 10076
220221	10076

Products for Industrial & Commercial Applications

Dimensions are shown for reference purposes only.

Dimensions are in inches and millimeters unless otherwise specified. Values in brackets are metric equivalents.

Specifications subject to change.

Technical Support Center
1-800-522-6752
www.tycoelectronics.com

Part Number	Page Number
220222	10076
220224	10076
220241	10076
220247	10009
221014	10060
221108	10014, 10015, 10026
221123	10016
221128	10007, 10008, 10009
221461	10060
221486	10060
221789	10048
221848	9118
222006	10017
222163	10017
222420	10016
222462	10017
222506	10022
222785	10014
223000	3052
223002	3052
223004	3054
223007	3054
223008	3054
223010	3052
223011	3052
223013	3052
223016	3052
223017	3052
223018	3052
223092	3055, 3056
223093	3055, 3056
223955	3040
223956	3042, 3044
223957	3042, 3044
223961	3041
223962	3041
223963	3041
223964	3041
223965	3041
223967	3041
223968	3041
223969	3042
223970	3041
223971	3041
223972	3041
223974	3041
223975	3041
223979	3042
223980	3041
223981	3041
223982	3042, 3044
223983	3041
223984	3040
224155	9115
224421	3041, 3046
224440	3042
224441	3041, 3046
224442	3041, 3046
224668	3046
224671	3046
224910	4034, 4039, 4059, 13022
225014	10032
225088	9116
225092	10031
225093	10032
225345	10022
225349	10023
225361	10031
225363	10033
225395	10007, 10008, 10009
225396	10011
225398	10012, 10013
225550	10022
225551	10024
225554	10023
225555	10022
225557	10025
225559	10023
225661	10031
225662	10031
225663	10032
225667	10033
225669	10032
225886	10009
225973	10010
225974	10010
226537	9116, 9117
226990	10014
226993	10015
227000	10022
227079	10007, 10008, 10009
227086	10031
227161	10014
227222	10015
227433	10014
227661	10014
227670	10015
227671	10015
227672	10015
227673	10015
227676	10014
227677	10014
227699	10016
227812	10026
227816	10026
227818	10026
227820	10026
227835	10026
227838	10026
227839	10026
227945	10034
228025	11014, 11029
228433	11004, 11007, 11010, 11014, 11026,
228448	10033
228553	10053
228658	10033
228838	11029
228979	10011
228980	10012, 10013
229378	1134, 13014
229384	1134, 13015
229451	1134
229621	1134
229622	1134
229706	1134
229707	1134
229708	1134
229709	1134
229710	1134
229764	1134, 13014
229765	1134
229909	1115
229910	1115
229911	1115, 1126
229912	1113
229913	1113
229968	1114
229969	1114
229974	1111
229975	1111
230238	1134
230327	1134
230328	1134, 13014
230536	1136
230537	1136
230596	1134
230707	2261
231279	13014
231561	1136
231576	1136
231592	1135
231593	1135
231619	1134
231648	1151, 13014
231649	1151, 13014
231652	1151, 13015
231662	1151
231666	1151
231880	1134
231894	9039
231920	9039
231925	1134
231928	1134
258436	10010
258537	10010
259006	11019, 11023
259007	11021, 11023
259012	11019, 11023
259013	11021, 11023
259015	11021, 11023
265871	2086, 2160, 3110
265964	2086, 3067, 3110
269027	11021, 11023
269140	10010
269142	11015, 11016, 11017, 11018
269143	11015, 11016, 11017, 11018
269223	10010
269245	10010
269331	10010
269422	10010
269429	10010
269477	10010
269478	10010
269669	10010
269727	10010
274250	7145
274260	7145
274278	7145
274282	7145
276963	7034
276964	7034
282804	8035
282810	8025
282812	8025
282813	8026
282815	8026
282820	8021
282822	8021
282823	8022
282825	8022
282830	8039
282832	8038
282833	8038
282834	8003
282835	8003
282836	8005
282837	8006
282840	8005
282841	8007
282846	8012
282847	8012
282850	8009
282851	8011
282856	8006
282857	8007
282862	8010
282863	8011
282868	8014
282869	8015
282888	8014
282908	8015
284040	8037
284041	8037
284046	8037
284047	8037
284052	8029
284053	8029
284056	8027
284057	8027
284060	8030
284061	8030
284064	8028
284065	8028
284093	8009
284094	8010
284391	8004
284392	8004
284393	8039
284414	8008
284415	8008
284506	8034
284507	8034
284508	8036
284509	8036
284510	8031
284511	8031
284512	8023
284513	8024
284514	8016
284515	8016
284516	8018
284517	8017
284518	8017
284519	8018
284539	8020
284540	8023
284541	8020
284542	8024
290263	5006
300430	7020
302219	7072, 7073
305183	9032, 9101, 9102, 9104, 9105, 9108, 9109, 9116, 9117, 9118, 9119, 9155
307581	10076
308075	10076
308554	2086
311386	10076
311392	10076
311395	10076
311396	10076
311470	7157
312067	10076
312253	10033, 10076
312317	10076
312324	13004
312522	1024, 1055, 1138, 1139, 2159, 2224, 2226, 2227, 13015
313183	1024
313549	3067
314269	7067
314270	7067
314516	7019
314517	7019
314518	7019
314537	7067
314592	7072, 7073
314621	7072, 7073
314818	2054, 2055, 2056, 2057, 2064, 2065, 2066, 2067, 2160, 13027
314833	7072, 7073
314868	7067
314869	7067
314916	7120
314917	7120
314918	7120
314919	7120
314920	7120
314925	7019
314926	7019
314979	7020, 7030, 7031, 7068, 13004
314999	7020
318161	7019, 7030, 9105, 9108, 9111, 9114, 9116, 9117, 9118, 10007, 10008, 10009, 10010, 10011, 10012, 10013, 10022, 12037
318161	
318450	10007, 10023, 10024, 10025
318452	10007
318619	4039, 4059
318774	7020
318800	13019
318813	9111, 9113, 9119
318831	9078
318837	9045
318851	9005, 9013, 9017, 9024
318860	3050, 3052, 3057
318866	3046
318867	3046
318868	3046
318869	3046
320093	7004
320138	7007
320266	7008
320306	7047
320344	7006
320383	7007
320551	7041, 7042
320553	7038
320554	7038
320555	7048
320560	7039
320561	7039, 7042
320562	7049
320563	7042
320564	7039, 7042
320566	7048
320568	7042
320569	7040, 7042
320570	7049
320571	7042
320572	7039, 7042
320573	7039
320574	7039
320575	7039
320576	7042
320577	7040
320620	7048
320627	7039
320630	7039
320631	7039
320634	7040
320665	7057
320741	7007
320743	7007
320744	7008
320748	7008
320749	7012
320754	7007
320763	7005
320764	7005
320765	7005
320788	7071, 7072
320855	7012
320856	7012
320861	7044
320862	7044
320863	7044
320882	7038
321013	7038

Products for Industrial & Commercial Applications

Dimensions are shown for reference purposes only.

Dimensions are in inches and millimeters unless otherwise specified. Values in brackets are metric equivalents.

Specifications subject to change.

Technical Support Center
1-800-522-6752
www.tycoelectronics.com

Part Number	Page Number
321026	7060
321035	7043
321056	7013
321059	7013
321060	7013
321063	7014
321064	7014
321066	7014
321165	7009
321198	7015
321201	7014
321253	7014
321271	7008
321275	7013
321280	7015
321288	7012
321298	7006
321499	7010
321518	7054
321519	7071, 7072
321576	7013
321580	7014
321582	7014
321584	7014
321598	7006
321600	7007
321632	7013
321671	7064
321677	7064
321684	7004
321828	7005
321866	7007
321867	7007
321868	7007
321869	7008
321870	7008
321871	7008
321872	7008
321873	7008
321874	7008
321875	7008
321876	7008
321877	7008
321878	7008
321879	7008
321880	7008
321884	7026
321885	7026
321889	7026
321890	7026
321891	7026
321892	7028
321893	7028
321894	7028
321897	7028
321898	7028
322003	7063
322004	7063
322006	7063
322007	7063
322010	7064
322011	7064
322047	7063
322048	7063
322049	7063
322050	7063
322051	7063
322052	7064
322053	7064
322074	7064
322087	7064
322090	7064
322125	7064
322128	7063
322153	7063
322154	7063
322157	7064
322224	7008

Part Number	Page Number
322225	7008
322227	7008
322242	7005
322246	7015
322249	7057
322252	7008
322253	7008
322254	7008
322257	7009
322259	7009
322262	7009
322264	7009
322267	7009
322269	7009
322275	7014
322276	7014
322277	7014
322278	7014
322279	7016
322280	7016
322282	7016
322291	7007
322320	7028
322324	7027
322326	7027
322329	7026
322334	7026
322335	7026
322337	7029
322338	7029
322339	7026
322345	7027
322347	7027
322363	7028
322365	7028
322366	7028
322375	7028
322443	7013
322445	7013
322447	7005
322451	7010
322454	7005
322455	7005
322459	7015
322695	7025
322724	7040
322733	7025
322764	7009
322768	7004
322773	7009
322777	7044
322797	7025
322798	7025
322799	7025
322822	7026
322870	7007
322880	7063
322888	7063
322894	7064
322902	7064
322994	7057
322996	7010
323008	7038
323011	7047
323030	7026
323039	7047
323062	7025
323064	7025
323066	7028
323068	7028
323069	7028
323096	7004
323127	7010
323143	7012
323144	7012
323151	7028
323152	7028
323153	7028

Part Number	Page Number
323161	7028
323165	7025
323166	7025
323167	7025
323169	7025
323172	7025
323173	7025
323177	7025
323196	7013
323199	7028
323219	7025
323271	7015
323291	7007
323672	7027
323676	7039
323680	7027
323682	7040
323683	7027
323696	7027
323698	7027
323745	7027
323749	7029
323750	7029
323751	7029
323754	7026
323755	7026
323763	7041
323794	7026
323795	7026
323796	7026
323868	7008
323869	7063
323878	7027
323912	7038
323913	7038
323914	7041
323916	7038
323974	7063
323985	7038
323986	7038
323989	7038
323990	7038
323994	7049
324001	7015
324015	7045
324043	7066
324044	7066
324045	7066
324046	7066
324047	7066
324048	7066
324049	7066
324050	7066
324051	7066
324052	7066
324053	7066
324054	7066
324057	7066
324061	7006
324082	7066
324084	7066
324111	7066
324112	7066
324113	7066
324123	7039
324138	7060
324158	7038
324159	7039
324165	7057
324169	7057
324172	7057
324225	7048
324227	7061
324443	7035
324444	7035
324445	7035
324446	7035
324447	7035

Part Number	Page Number
324448	7035
324449	7035
324450	7035
324451	7035
324453	7035
324454	7035
324456	7035
324458	7035
324460	7035
324461	7035
324462	7035
324463	7035
324464	7035
324466	7035
324467	7035
324468	7035
324469	7035
324471	7035
324487	7074
324523	7018
324533	7039
324581	7057
324587	7045
324597	7044
324608	7044
324693	7074
324695	7074
324893	7015
324915	7040
324918	7040
324987	7069
324989	7069
325069	7013
325201	7033
325202	7033
325203	7033
325301	7033
325302	7033
325303	7033
325305	7033
325401	7033
325402	7033
325403	7033
325405	7033
325502	7033
325503	7033
325505	7033
325602	7033
325603	7033
325605	7033
325703	7034
325705	7034
325803	7034
325805	7034
325807	7034
325903	7034
325905	7034
326005	7034
326103	7034
326105	7034
326151	7034
326405	7034
326799	7033
326800	7033
326801	7033
326802	7033
326803	7033
326805	7034
326806	7034
326807	7034
326808	7034
326809	7034
326819	7053
326859	7044
326861	7043
326878	7038
326882	7039
326886	7040

Part Number	Page Number
327025	7015
327043	7057
327175	7007
327268	7063
327284	7033
327286	7034
327287	7034
327289	7034
327583	7049
327638	7049
327639	7049
327654	7038
327717	7043
327732	7009
327735	7057
327946	7043
327954	7043
327956	7043
327960	7043
327962	7043
328141	7033
328142	7033
328143	7033
328162	7033
328163	7033
328164	7033
328261	7054
328307	7074
328308	7074
328309	7074
328375	7071, 7072
328394	7043
328427	7060
328516	7057
328527	7054
328657	7038
328663	9118
328664	9118
328666	9118
328667	9118
328730	7071, 7073
328822	7027
328849	7039
328859	7024
328890	7071, 7072
328975	7039
328996	7039
328998	7039
328999	7039
329029	9118
329251	7071, 7072
329254	7151
329389	7040
329444	10008
329445	10009
329446	10007
329452	10011
329456	10013
329458	10012
329545	10011
329549	10011
329631	10014, 10015, 10026
329632	10014, 10015, 10026
329657	7152
329860	7151
329951	7038
329966	7004
330003	7151
330021	7071, 7072
330061	10007
330062	10011
330063	10012
330301	7007
330358	10008
330367	7015
330368	7015
330369	7015

Products for Industrial & Commercial Applications

Dimensions are shown for reference purposes only.

Dimensions are in inches and millimeters unless otherwise specified. Values in brackets are metric equivalents.

Specifications subject to change.

Technical Support Center
1-800-522-6752
www.tycoelectronics.com

Part Number	Page Number
330478	9118
330518	7054
330587	9118
330600	7063
330620	10014, 10015
330648	7038
330827	7010
330876	10007
330878	10009
330896	7040
330969	7009
331175	10010
331178	10010
331182	10010
331238	10025
331350	10007, 10008, 10009
331351	10011
331420	7009
331456	7066
331693	10012
331974	10012
332006	7152
332056	9116
332057	9116, 9117
338108	3027
338110	3027
345721	5005
345729	5005
345848	5005
345850	5005
345870	5005
348465	5013
348466	5013
348467	5013
348468	5013
348469	5013
348470	5013
348471	5013
348472	5013
348473	5013
348474	5013
348475	5013
348476	5013
348477	5013
348478	5013
348479	5013
348480	5013
348481	5013
348482	5013
348483	5013
348484	5013
348485	5013
348486	5013
348487	5014
348488	5013
348489	5014
348490	5014
350020	9074
350021	9074
350022	9074
350073	9033
350074	9033
350078	9032, 9084
350079	9032, 9084
350180	2262
350200	9042, 9084
350201	9042, 9084
350209	9030, 9037
350210	9030, 9037
350211	9031, 9037, 9039
350212	9030, 9037
350213	9030, 9037
350214	9030, 9037
350218	9017, 9024, 9083
350219	9030, 9037
350220	9030, 9037
350344	9043
350345	9043
350346	9043
350347	9043
350373	9074
350374	9074
350375	9074
350376	9074
350377	9074
350378	9074
350379	9074
350380	9074
350388	9042
350389	9042
350390	9042
350391	9042
350415	9045, 9084
350416	9045, 9084
350417	9045, 9084
350418	9045, 9084
350422	9030, 9037
350423	9030, 9037
350424	9031, 9037, 9039
350425	9030, 9037
350426	9030, 9037
350427	9030, 9037
350428	9016, 9025
350429	9016, 9025
350430	9016, 9025
350431	9016, 9025
350432	9016, 9025
350433	9016, 9025
350434	9016, 9025
350436	7128
350444	9032
350522	9074
350523	9074
350524	9074
350536	9017, 9024, 9083
350537	9017, 9083
350538	9017, 9083
350539	9030, 9037
350540	9030, 9037
350541	9030, 9037
350542	9030, 9037
350543	9031, 9037
350544	9031, 9037
350547	9017, 9024
350550	9017, 9024
350551	9017
350552	9017
350557	9032, 9084
350558	9032, 9084
350561	9017, 9083
350570	9017, 9083
350576	9030, 9038
350577	9030, 9038
350578	9030, 9038
350579	9030, 9038
350582	9016, 9025
350583	9016, 9025
350584	9016, 9025
350585	9016, 9025
350586	9016, 9025
350587	9016, 9025
350588	9016, 9025
350589	9020
350590	9020
350591	9070
350628	9078, 9084
350629	9078, 9084
350638	9032
350639	9032
350641	9030, 9038
350642	9030, 9038
350643	9030, 9038
350644	9030, 9038
350650	12023
350654	9024, 9083
350669	9024
350687	9018, 9024, 9083
350689	9017
350690	9017
350699	9018, 9083
350700	9018, 9083
350705	9018, 9024
350706	9018
350707	9018
350711	9004, 9010, 9016, 9025
350712	9004, 9010, 9016, 9025
350713	9004, 9010, 9016, 9025
350714	9004, 9010, 9016, 9025
350715	9010, 9011, 9016, 9019, 9025, 9026
350720	9010, 9011, 9016, 9019, 9025, 9026
350732	9004, 9010, 9016, 9025
350735	9010, 9011, 9016, 9019, 9025, 9026
350736	9010, 9011, 9016, 9019, 9025, 9026
350737	9004, 9010, 9016, 9025
350738	9004, 9010, 9016, 9025
350742	9004, 9010, 9016, 9025
350759	9016, 9026
350760	9016, 9026
350761	9016, 9026
350762	9016, 9026
350763	9016, 9026
350764	9016, 9026
350765	9016, 9026
350766	9010, 9011, 9012, 9016, 9019, 9025, 9026, 9027, 9028
350767	9016, 9019
350777	9010, 9011, 9012, 9016, 9019, 9025, 9026, 9027, 9028
350778	9016, 9019
350779	9010, 9011, 9012, 9016, 9019, 9025, 9026, 9027, 9028
350780	9016, 9019
350781	9016, 9019
350782	9016, 9019
350783	9016, 9019
350784	9016, 9019
350786	9004, 9010, 9016, 9025
350787	9004, 9010, 9016, 9025
350789	9004, 9010, 9016, 9025
350790	9004, 9010, 9016, 9025
350792	9004, 9010, 9016, 9025
350793	9004, 9010, 9016, 9025
350809	9010, 9011, 9012, 9016, 9019, 9025, 9026, 9028
350810	9006, 9016, 9019
350811	9020
350812	9020
350815	7116
350816	7116
350819	7116
350820	7116
350821	12023
350824	9004, 9011, 9016, 9026
350825	9004, 9011, 9016, 9026
350826	9004, 9011, 9016, 9026
350827	9004, 9011, 9016, 9026
350828	9004, 9011, 9016, 9026
350829	9004, 9011, 9016, 9026
350830	9004, 9011, 9016, 9026
350831	9004, 9011, 9016, 9026
350832	9004, 9011, 9016, 9026
350833	9004, 9011, 9016, 9026
350834	9004, 9011, 9016, 9026
350835	9004, 9011, 9016, 9026
350836	9004, 9011, 9016, 9026
350837	9004, 9011, 9016, 9026
350838	9070
350848	9028
350849	9028
350851	9017, 9083
350865	9016, 9019
350866	9016, 9019
350867	9016, 9019
350871	9018
350873	9017, 9083
350874	9017, 9083
350877	9018
350918	9017
350919	9017
350922	9017, 9083
350923	9017, 9083
350924	9017, 9083
350925	9017, 9083
350942	9004, 9012, 9016, 9028
350943	9004, 9012, 9016, 9028
350944	9004, 9012, 9016, 9028
350945	9004, 9012, 9016, 9028
350948	9016, 9028
350949	9016, 9028
350967	9070, 9084
350968	9070, 9084
350969	9070, 9084
350980	2215, 2216
350981	7128
350986	9016, 9026
350987	9016, 9026
350988	9016, 9026
350989	9016, 9026
350990	9016, 9026
350991	9016, 9026
350992	9016, 9026
352009	3027
352029	3027
352068	3027
352069	3027
352112	3027
352115	3027
352131	3034
352152	3027
352171	3027
352268	3036
352269	3036
352271	3034
352272	3034
352273	3034
352344	3027
352345	3027
352346	3027
352406	3034
352457	3036
352468	3027
354173	7072, 7073
354422	7072, 7073
354500	1152, 2158, 2177, 2227, 7067, 9111, 12023, 12029, 12037, 13005
354687	3046, 3050, 3057
354711	1152, 13016
354714	1152, 13016
354786	1018, 1109, 1136, 2159, 13018
354940	2158, 2177, 10007, 10008, 10009, 10010, 10011, 10012, 10013, 10022, 10023, 10024, 10025, 10031, 10032, 10033, 10034, 13003
356114	9013, 9113, 9115
356119	9115
356302	7031, 7151
356304	9101, 9103, 9105, 9106, 9108, 9111, 9114, 9116, 9117, 9118, 9155
356336	9113
356337	9013
356484	4059, 13022
356500	2158, 2177, 12029, 13008
356611	9111
356612	9111
356744	7031
360040	7105
360041	7103
360042	7103
380392	2086, 3067
380736	2262
380935	9074
380936	9074
380937	9074
380991	9030, 9037
380999	9030, 9037
382189	5007
382374	5003
382437	5019
382438	5019
382481	5025
382482	5025
382483	5025
382486	5025
382487	5025
390040	5029
390074	5029
390110	5027
390111	5027
390112	5027
390113	5027
390114	5027
390168	5029
390170	5032
390171	5031
390172	5031
390175	5031
390185	5032
390195	5032

Products for Industrial & Commercial Applications

Dimensions are shown for reference purposes only.

Dimensions are in inches and millimeters unless otherwise specified. Values in brackets are metric equivalents.

Specifications subject to change.

Technical Support Center
1-800-522-6752
www.tycoelectronics.com

Part Number	Page Number
390215	5029
390240	5029
390261	5005
390262	5006
390322	5027
406014	1160
406016	1160
406017	1157
406135	1160
406203	1162
406205	1160
406217	1162
406299	1162
406342	1149
406429	1157
406436	1158
406443	1162
406566	1162
413631	10018
413771	10012, 10013
413779	10011
413879	10014
413959	10010
413969	10016
413985	10052
413990	10054
413996	10055
414002	10052
414026	10055
414048	10059
414075	10059
414168	10025
414170	10053
414171	10024
414173	10023
414244	10060
414305	10016
414337	10055
414363	10052
414367	10028
414373	10018
414379	10055
414460	10016
414612	10054
414618	10059
414684	10014
414724	10007, 10008, 10009
414767	10059
414852	10007, 10008, 10009
414915	10007, 10008, 10009
414946	10052
414948	10053
414963	10055
414985	10052
415006	10053
415025	10018
415046	10014
415189	10016
415218	10014
415232	10031
415242	10032
415248	10033
415252	10034
415255	10032
415340	10055
415372	10018
415377	10058
415380	10055
415381	10055
415382	10055
415462	10059
415484	10057
415487	10057
415490	10058
415500	10057
415504	10058
415577	10060
415590	10054
415672	10055
415773	10054
415774	10054
432130	2266
432582	3109
432583	3109
432805	3109
432849	2266
433600	2266
436036	3047
438001	3047
438002	3047
438003	3047
438014	3047
438015	3047
438020	3047
438021	3047
438023	3047
438031	3047
438032	3047
438036	3047
438037	3047
438041	3047
438042	3047
438051	3047
438052	3047
438053	3047
438054	3047
438056	3047
438057	3047
438058	3047
438070	3047
438071	3047
438072	3047
438076	3047
438077	3047
439491	3047
443957	12018
443958	12018
443975	1097
443976	1097
443977	1097
443978	1097
445548	1101
445705	1100
445730	1100
446405	1100
447648	10045
448103	10045
448153	1100
448460	12018
448658	12018
448660	12018
449379	1101
453300	9042
455822	9070
455830	9032, 9060, 9070
457306	9074
457382	2172
459248	13007
463345	4040
465644	9032
466003	7131
466007	2175
466010	7078
466018	7077, 7078
466052	7127
466057	7108
466060	7090
466061	7132
466065	7128
466071	7130
466081	7132
466085	7130
466089	7132
466090	7090
466093	7133
466094	7127
466095	7128, 7130
466123	7127
466140	7128
466141	7090
466154	7084
466173	12023
466175	7133
466185	7127
466192	7128
466211	7130
466242	4040
466284	7077
466299	7091
466300	7087
466320	9017, 9018, 9032, 9033, 9083, 9084
466321	9101
466323	9101, 9103
466324	9101
466325	9101
466326	9101
466351	9070, 9084
466352	9070, 9084
466370	7127
466376	2165
466377	7091
466383	9101
466388	7132
466390	7163
466409	7087
466415	7091
466422	1043, 9106
466423	1043, 9106
466426	9032, 9084
466431	7095
466432	7095
466441	7097
466444	7097
466446	7127
466449	7103
466462	9084
466467	7095
466468	2215
466500	7079
466501	7090
466502	7079
466503	7087
466508	7099
466516	12029
466532	7077
466542	7111
466554	7124
466562	2119
466571	2119
466572	4040
466585	9101
466588	9017, 9083
466598	9101
466616	9017, 9083
466643	7133
466647	7128
466649	7077, 7078, 7079, 7128
466655	2119
466656	9045, 9084
466678	7083
466686	9078, 9084
466691	7130
466695	7163
466725	7083
466727	2224, 2227
466728	2224, 2227
466741	9103
466747	2189
466758	9106
466763	2168
466764	2168
466788	7124
466789	7124
466790	7124
466812	2117
466878	9045, 9084
466883	7111
466900	1043, 9106
466901	1043, 9106
466902	1043
466903	1043
466905	2119
466906	9101
466907	9101, 9103
466908	9101
466909	4040
466913	9084
466917	9083, 9084
466918	2119
466920	9083, 9084
466921	2119
466922	9084
466923	9101
466933	4040
466937	2168
466942	9101
466947	2215
466950	2175
466955	9084
466958	9101, 9155
466959	9084
466963	1043, 9106
466968	1043, 9106
466979	9101
466980	2127, 2150
466981	2127, 2150
466982	2127, 2150
466983	2151
466986	9084
466989	9083
466990	9084
466996	1043
469268	1152
471273	2224, 2227, 7128, 7129, 7130, 7146, 7153, 13007, 13010
478545	4036
480003	7109
480004	7109
480019	7104
480053	7108
480054	7108
480173	7109
480174	7109
480270	9030, 9036, 9037
480271	9030, 9036
480273	9030, 9035
480274	9030, 9035
480275	9030, 9035
480276	9030, 9035, 9038
480277	9030, 9035, 9038
480278	9030, 9035, 9038
480283	9030, 9036, 9037
480284	9030, 9036
480285	9030, 9036, 9037
480286	9030, 9036
480287	9030, 9036, 9037
480288	9030, 9036
480303	9030, 9034, 9037, 9039
480304	9030, 9035
480305	9030, 9034, 9035
480306	7104
480307	7104
480318	9030, 9034, 9037, 9039
480319	9030, 9034
480323	9030, 9035
480324	9030, 9035, 9038
480339	9030
480340	9030
480344	7163
480345	9030
480349	9030, 9034
480350	9030, 9034
480351	9030, 9034
480387	9030, 9034
480388	9030, 9034
480393	9030, 9034
480400	9030, 9034
480401	9030, 9031, 9034, 9037, 9039, 9040
480416	7104
480417	7105
480418	7104
480425	9031, 9035
480426	9031, 9034, 9035, 9038, 9039
480438	9030, 9036, 9037
480439	9030, 9036
480487	7104
480498	9030, 9034
480510	9042
480512	9042
480585	9042
480586	9042
480594	9074
480634	9074
480672	9043
480673	9043
480698	9016, 9019, 9025, 9026, 9027
480699	9016, 9019
480700	9016, 9019, 9025, 9026, 9027
480701	9016, 9019
480702	9016, 9019, 9025, 9026, 9027, 9028
480703	9016, 9019
480704	9016, 9019, 9025, 9026
480705	9016, 9019
480706	9016, 9019, 9025, 9026
480707	9016, 9019
480708	9016, 9019, 9025, 9026
480709	9016, 9019
480710	9016, 9019, 9025, 9026
480711	9016, 9019
480720	9030, 9037
480721	9030, 9037
480722	9037
480763	9016, 9019, 9025, 9026, 9028
480764	9016, 9019
480772	9031
485003	7127
485029	7128
485893	4043
487117	4039
487223	4049
487378	4042
487406	4039

Products for Industrial & Commercial Applications

Dimensions are shown for reference purposes only.

Dimensions are in inches and millimeters unless otherwise specified. Values in brackets are metric equivalents.

Specifications subject to change.

Technical Support Center
1-800-522-6752
www.tycoelectronics.com

Part Number	Page Number
487526	4042
487544	4036
487545	4036
487547	4034
487769	4042
487923	4034
487937	4038
487938	4038
487940	4034
487941	4034
487951	4057
487952	4058
487953	4056
492025	11010, 11029
492026	11010, 11029
492123	11008
492168	11003
492322	11003
492414	11028
492415	11028
492458	11005
492477	11028
492508	11007, 11010, 11025
492526	11028
492527	11028
492543	11003
492547	11028
492622	11002, 11029
492623	11002, 11029
492642	11002
492643	11002
492674	11002
492697	11002
492703	11002
492749	11028
492782	11002, 11029
492783	11002, 11029
494032	4043
494033	4040
494034	4040
497938	4038
499141	4029
499160	4026
499206	4026
499252	4008, 4009, 4011
499345	4029
499374	4026
499582	4027
499712	4012
499786	4029
499910	4026
499913	4029
499922	4026
499923	4026
499991	2115, 4032
499997	4008
501049	11014
501050	11014
501055	11014
501195	11004, 11007, 11010, 11014, 11026
501258	11024
501275	11007
501301	11014, 11026
501380	11005
501381	11006
501457	11007
501473	11004, 11007, 11010, 11014, 11025
501474	11007
501795	11029
501818	11004, 11007, 11010, 11014, 11029
502023	11029
502128	11007
502129	11027
502134	11027
502136	11014
502179	11007
502222	11027
502249	11014, 11029
502259	11004, 11007, 11029
502306	11026
502418	11004, 11007, 11010, 11014, 11026
502418	
502579	11004
502580	11004
502585	11007
502631	11010, 11029
502632	11011
502656	11010, 11029
502667	11007
502748	11004, 11010, 11026
502750	11004, 11006
502776	11011
502780	11012
502964	11028
502965	11028
502966	11028
502967	11028
502968	11028
502969	11028
502970	11008, 11028
502971	11028
502975	11028
502977	11028
502978	11028
503134	11027
503137	11013
503141	11009
503304	11007, 11029
503330	11003
503337	11004, 11007, 11029
503366	11029
503415	11006
503424	11006
503567	11029
503568	11029
503569	11005
503571	11005
503613	11004
503628	11007, 11009
503692	11003
503693	11003
503698	11029
503699	11029
503705	11003
503706	11003
503746	11004, 11007, 11008, 11010, 11014, 11024
503787	11010
503890	11029
503910	11010, 11029
503911	11010, 11029
503948	11008
503957	11003
503971	11009
504000	11003
504001	11003
504008	11005
504014	11014
504015	11014
504021	11004, 11006
504022	11007
504026	11014
504028	11014
504030	11014
504031	11014
504034	11003
504035	11010, 11025
504064	11028
504290	11028
504566	11014
504567	11014
504568	11014
504614	11011
504617	11028
504618	11028
504632	11011
504634	11012
504640	11011
504646	11008
504647	11008
504655	11008
504656	11008
504657	11008
504663	11013
504862	11029
504883	11009
504927	11008
504928	11008
504929	11008
504930	11008
504931	11008
504932	11008
504933	11008
504934	11008
504935	11008
504936	11008
504937	11008
504938	11008
504939	11008
504940	11008
507145	2159
520080	7116
520081	7116
520083	7116
520084	7116
520102	7117
520103	7117
520106	7117
520107	7117
520116	7116
520117	7116
520124	7116
520125	7116
520128	7117
520129	7117
520132	7117
520133	7117
520140	7116
520141	7116
520150	7116
520151	7116
520181	7116
520182	7116
520183	7116
520184	7116
520193	7116
520194	7116
520212	7105
520241	1155
520242	1155
520249	1155
520250	1155
520251	1155
520252	1155
520257	1158
520258	1158
520259	1158
520260	1158
520261	7116
520263	7116
520264	7116
520272	7116
520273	7116
520274	7116
520275	7116
520276	7116
520306	7116
520310	7116
520314	4050, 4051
520315	4050, 4051
520316	4050, 4051
520334	7117
520335	7117
520336	7117
520337	7117
520338	7117
520339	7117
520340	7117
520353	4050, 4051
520355	4050, 4051
520365	7116
520366	7116
520370	7116
520401	7119
520402	7119
520403	7119
520404	7119
520405	7119
520406	7119
520407	7119
520408	7119
520409	7119
520410	7119
520411	7119
520412	7119
520415	4050, 4051
520421	1140
520422	1140, 1141
520423	1138
520424	1139
520425	1158
520426	1155
520435	1139
520436	1139
520437	1139
520440	1139
520441	1139
520447	7116
520448	7116
520459	1140
520459	1140
520462	1139
520463	1139
520464	1139
520465	1139
520466	1139
520467	1139
520470	1155
520532	1139
520852	1139
520853	1139
520854	1139
520856	7117
520932	7119
520935	7106
520942	7159
520961	7111
520963	7121
520971	7121
520973	7121
520974	7121
520978	7105
520979	7119
520982	7121
520987	7105
520988	7121
520994	7160
520997	7117
521011	7121
521013	7117
521050	7121
521053	7105
521055	7119
521057	7119
521065	7106
521066	7106
521097	7117
521098	7117
521102	7117
521103	7117
521104	7117
521105	7117
521112	7121
521119	7113
521120	7113
521125	7112
521142	7117
521144	7117
521164	7117
521191	7117
521192	7117
521204	7114
521205	7114
521206	7114
521207	7114
521208	7114
521209	7114
521210	7114
521213	7122
521217	7122
521225	7121
521247	7117
521271	7122
521282	7121
521284	7121
521288	7121
521293	7121
521308	7116
521317	7122
521366	7121
521367	7121
521368	7121
524267	2097
525651	7111
527085	2159
528317	13009
528324	13008, 13009
530654	2020
530655	2020
530655	2020
530666	2020
530671	2019
530677	2020
530678	2020
530841	2014
530843	2012
530844	2013
531341	2014
532428	3074
532430	3073
532431	3072
532433	3071
532434	3070
532436	3069
532446	3073
532447	3071
532448	3069
532600	2015
532807	3075
532808	3029, 3075
532825	3074
532828	3043, 3075
532903	3070
532924	3066, 3076
532955	2107, 2108
532956	2107, 2108
533061	3071
533065	3076, 3043
533082	3066, 3075, 3084
533236	3105

Products for Industrial & Commercial Applications

Dimensions are shown for reference purposes only.

Dimensions are in inches and millimeters unless otherwise specified. Values in brackets are metric equivalents.

Specifications subject to change.

Technical Support Center
1-800-522-6752
www.tycoelectronics.com

Part Number	Page Number
533265	3076
533268	3072
534204	2107, 2108
534206	2093
534237	2092
534245	2112
534257	2110
534267	2097
534611	3109
534972	2109
534975	2107, 2108
534978	2110, 2111
534998	2096
535032	3093
535034	3093
535043	3085, 3092
535056	3093
535059	3093
535068	3093
535070	3092
535071	3092
535072	3109, 3110
535074	3105
535079	3093
535080	3093
535089	3092
535090	3092
535091	3092
535097	3092
535098	3092
535099	3092
535512	2090
535541	2095
535542	2098
535676	2089
535817	3084
535839	3084
535840	3083
535841	3079
535843	3079
535845	3079
535865	3083
535875	3084
535919	3082
535959	2102
536010	3091
536011	3091
536012	3091
536013	3091
536019	3090
536035	3101
536067	3090
536092	3090
536093	3090
536094	3090
536095	3090
536096	3090
536097	3090
536098	3090
536099	3090
536100	3090
536101	3090
536128	2017
536131	3101
536254	3006
536272	3004
536273	3004
536279	3006
536280	3004
536295	3007
536297	3007
536299	3007
536356	3091
536365	3084
536366	3090
536397	3092
536405	3091
536406	3091
536407	3091
536408	3091
536409	3091
536410	3091
536412	3092
536413	3091
536414	3091
536416	3091
536418	3092
536419	3101
536420	3101
536421	3101
536422	3101
536423	3101
536424	3101
536426	3101
536427	3101
536428	3101
536431	3104
536432	3104
536433	3104
536434	3104
536437	3090
536481	3092
536484	3092
536485	3092
536486	3092
536487	3092
536488	3092
536489	3092
536490	3092
536491	3092
536492	3092
536493	3092
536494	3092
536501	3051
536504	3051
536507	3053
536510	3053
536511	3053
536513	3051
536514	3051
536515	3051
536524	3051
536536	3051
536542	3051
536549	3051
536551	3051
536600	3055
536603	3055
536606	3055
536607	3056
536613	3056
536614	3056
536619	3055
536620	3055
536621	3055
536622	3055
536623	3055
536625	3055
536627	3055
536628	3055
536642	3055
536649	3056
536741	3091
536742	3091
536744	3090
536751	3090
536756	3092
538051	3047
538052	3047
543013	1056, 1057
543157	1033
543344	1024, 1055, 1056, 1057
543424	1024
543425	1024
543426	1033
543470	4059
543471	4059
543472	4059
543479	4059
543481	1011, 1019
543494	1011, 1019
543502	1011, 1019
543508	1011, 1019
543515	1019
543518	4004
547178	13025, 13026
552001	1111
552003	1114
552008	1114
552011	1114
552014	1114
552027	1115
552032	1111
552064	1111
552073	1114
552076	1114
552079	1114
552082	1114
552116	1127
552118	1127
552173	1111
552224	1127
552235	1127
552270	1111
552271	1111
552272	1111
552273	1111
552274	1111
552275	1111
552276	1111
552277	1111
552282	1111
552283	1111
552284	1111
552285	1111
552296	1115
552297	1115
552298	1115
552301	1111
552303	1111
552305	1111
552307	1111
552312	1111
552313	1111
552314	1111
552315	1111
552317	1111
552318	1111
552319	1111
552382	1113
552383	1113
552390	1111
552391	1111
552402	1113
552412	1114
552413	1114
552414	1114
552471	1111
552476	1111
552488	1111
552496	1114
552560	1115
552561	1113, 1118, 1121, 1126
552562	1127
552563	1127
552567	1116, 1121
552568	1116
552617	1115
552631	1126
552633	1126
552686	1111
552690	1127
552699	2261
552714	13014
552723	1113, 1121, 1126
552725	1125
552726	1125
552731	1114
552738	1125
552740	1125
552741	1125
552742	1125
552743	1125
552744	1125
552770	2261
552791	1125, 1126
552820	1125, 1126
552837	1120
552838	1121
552843	1121
552933	1120
552960	1115
552962	1116
552967	2261
553270	3069
553359	1121
553443	1129
553444	1129
553594	2261
553595	2261
553596	1120
553597	1120
553598	1120
553599	1120
553600	1120
553601	1120
553602	1120
553603	1120
553609	1129
553636	1123
553811	1131
553813	1131
553921	1112
554043	1133
554084	1120
554085	1120
554088	1120
554089	1120
554090	1120
554103	1120
554105	1120
554145	1133
554169	1148
554170	1148
554216	1133
554217	1133
554272	1123, 1132
554346	1123
554348	1123
554350	1123
554381	1112
554434	1123
554436	1123
554501	1133
554517	1155
554710	1147
554720	1148
554725	1118
554739	1148
554743	1148
554753	1129
554758	1129
554759	1129
554808	1123, 1132
554818	1123, 1131, 1133
554858	1133
554901	1131
554923	1132
554944	1118
554946	1118
554948	1118
554950	1118
554953	1118
554954	1118
554955	1118
554990	1158
555003	1155
555042	1147
555057	1132
555119	1132
555139	1132
555140	1157
555141	1157
555151	1112
555153	1157
555154	1157
555162	1156
555163	1156
555164	1156
555165	1156
555166	1156
555167	1156
555176	1147
555227	1112
555233	1131
555236	1149
555237	1149
555238	1149
555417	1148
555426	1147
555520	1132
555753	1112
555757	1133
555799	1158
555979	1155
555980	1155
556039	1112
556135	12037
556136	12037
556137	12036
556384	1147
556409	1112
556416	1158
556591	1157
556879	12033
556880	12033, 12034
556881	12031
556882	12032
556883	12033, 12034
556926	1157
557100	2229
557101	2229
557102	2230
557103	2230
557313	12036
557315	1148
557484	1158
557562	1160
557563	1160
557564	1160
557566	1160
557572	1160
557640	12036
557730	1158
557785	1156
557932	1132
557961	1148
557969	1158
557970	1147
557972	1148
557973	1148
557984	1129
558065	1156
558066	1156
558084	12031
558310	1157
558382	1157

Products for Industrial & Commercial Applications

Dimensions are shown for reference purposes only.

Dimensions are in inches and millimeters unless otherwise specified. Values in brackets are metric equivalents.

Specifications subject to change.

Technical Support Center
1-800-522-6752
www.tycoelectronics.com

Part Number	Page Number
558530	1150
558574	12031
558872	1158
565433	13005
565435	4040, 7067, 7077, 7078, 7079, 7080, 7083, 7084, 7085, 7086, 7087, 7088, 7089, 7090, 7091, 7095, 7097, 7099, 7108, 7111, 7112, 7124, 12025
565967	2165
566263	7129, 7130
566347	7131
566372	7146
566510	7130
567006	7083
567020	2224, 2227
567021	9114
567036	9106
567066	9052, 9060, 9084
567067	9052, 9060, 9084
567069	12005
567109	7112
567110	7112
567181	7111
567200	7067, 7124, 13011
567211	9005, 9083
567212	9005, 9083
567213	9005, 9083
567214	9005, 9083
567216	9083
567239	2151
567251	9060, 9084
567252	9005, 9083
567253	7160
567256	12034, 12037
567273	9045, 9084
567288	7089
567296	2127, 2150
567297	2127, 2150
567298	2127, 2150
567306	9042, 9084
567307	2117
567308	4040
567309	9042, 9084
567337	9045, 9084
567363	9101, 9155
567364	9101, 9155
567373	2197
567403	12037
567417	7111
567418	9052, 9060, 9084
567455	9114
567561	4040
567687	7078
567801	9106
567804	9106
567827	2197
567828	2215
567834	9155
567849	9106
567867	9101
567902	9084
567910	2197
567913	9083
567914	9083
567947	9101
569026	1156
569118	1156
569278	1150
569284	1158
569530	1149
569532	1149
569542	1149
569552	1150
569941	1160
569942	1157
569950	1150
569984	1158
575143	7084
580132	2268
580133	2268
582118	2262
582119	2262
582340	2262
594945	1118
599406	1102, 13011
600850	13013
601075	13013
601827	13026
601966	1102
601967	9105, 9109
603995	10075, 13023
606700	13023
607453	13026
608651	1101, 9112
608668	1101, 9112
608868	1033
640008	7127
640051	7128
640102	7128
640250	2214, 2216
640251	2214, 2216
640252	2215, 2216
640309	9017
640310	9017
640347	9017
640357	5004
640358	5004
640359	5004
640361	5004
640362	5004
640379	5004
640383	2200, 2207, 2212, 2214
640384	2200, 2207, 2214
640385	2200, 2207, 2212, 2214
640387	2200, 2208, 2214
640388	2200, 2208, 2214
640389	2200, 2208, 2212, 2214
640391	9078, 9084
640392	9078, 9084
640415	9020
640426	2200, 2202
640427	2200, 2202
640428	2200, 2202
640429	2200
640430	2200
640431	2200, 2202
640432	2200, 2202
640433	2200, 2202
640434	2200
640435	2200
640440	2186, 2188
640441	2186, 2188
640442	2186, 2188
640443	2186, 2188
640445	2200, 2208, 2212, 2214
640452	2186, 2192
640453	2186, 2192
640454	2186, 2193
640455	2186, 2193
640456	2186, 2193
640457	2186, 2193
640463	5003
640464	5004
640466	9016, 9025
640467	9016, 9026
640468	2186, 2188
640469	2186, 2188
640470	2186, 2188
640471	2186, 2188
640472	2200
640473	2200
640474	2200
640475	2200
640476	2200
640477	2200
640478	2200
640479	2200
640480	2200
640481	2200
640483	7163
640497	9069, 9076
640498	9069, 9076
640499	9069, 9076
640500	9069, 9076
640501	9069, 9076
640502	9069, 9076
640503	9069, 9076
640504	9069, 9076
640505	9069, 9076
640506	9069, 9076
640507	9069, 9071
640508	9069, 9071
640509	9069, 9071
640510	9069, 9071
640511	9069, 9072
640512	9069, 9072
640513	9069, 9072
640514	9069, 9072
640515	9069, 9072
640516	9069, 9073
640517	9069, 9071, 9076
640518	9069, 9071, 9076
640519	9069, 9071, 9076
640520	9069, 9071, 9076
640521	9069, 9072, 9076
640522	9069, 9072, 9076
640523	9069, 9072, 9076
640524	9069, 9072, 9076
640525	9069, 9072, 9076
640526	9069, 9073, 9076
640545	9070
640550	2190
640551	2204
640579	9070
640580	9070
640581	9016, 9019, 9025, 9026, 9028
640582	9016, 9019, 9026, 9028
640583	9016, 9028
640584	9016, 9028
640585	9016, 9019, 9025, 9028
640586	9016, 9019, 9025, 9028
640587	9016, 9028
640595	2200
640599	2200, 2203
640600	2200, 2203
640601	2200, 2203
640602	2200, 2203
640604	2200, 2203
640605	2200, 2203
640606	2200, 2203
640607	2200, 2203
640608	2200
640620	2186, 2188
640621	2186, 2188
640622	2186, 2188
640623	2186, 2188
640629	2205
640630	2205
640631	2204
640632	2204
640633	2204
640634	2204
640635	2204
640636	2189
640637	2189
640638	2189
640639	2189
640642	2190
640643	2204
640706	2215
640707	2215
640708	2189
640709	2189
640713	9009, 9021
640714	9009, 9021
640715	9009, 9021
640716	9009, 9021
640717	9009, 9021
640718	9009, 9021
640719	9021
640720	9021
640721	9021
640722	9021
640723	9021
640724	9021
640748	7162
640750	7163
640900	9004, 9006, 9010, 9016, 9025
640901	9004, 9006, 9011, 9016, 9026
640909	7124
640911	7124
640913	7124
640915	7124
640918	7124
640922	7124
640923	7124
640929	7124
640931	7124
640946	3091
641083	9016
641084	9016
641113	2201, 2207
641114	2201, 2207
641115	2201, 2207
641118	2201
641119	2201, 2208
641120	2201, 2208
641121	2201
641122	2187, 2192
641123	2187, 2192
641124	2187
641125	2187
641126	2187, 2193
641127	2187, 2193
641143	2204
641144	2204
641145	2204
641146	2204
641147	2204
641148	2201, 2202
641149	2201
641150	2201, 2202
641151	2201
641152	2201
641153	2201, 2202
641154	2201
641155	2201, 2202
641156	2201
641157	2201
641168	2201
641169	2201
641170	2201
641171	2201
641172	2201
641173	2201
641174	2201
641175	2201
641176	2201
641177	2201
641186	2189
641187	2189
641188	2189
641189	2189
641190	2187, 2188
641191	2187, 2188
641192	2187, 2188
641193	2187, 2188
641198	2187, 2188
641199	2187, 2188
641200	2187, 2188
641201	2187, 2188
641202	2201, 2207, 2214
641203	2201, 2207, 2214
641204	2007, 2201, 2214
641207	2201, 2208, 2214
641208	2201, 2208, 2214
641209	2201, 2208, 2214
641210	2201, 2208, 2214
641211	2187, 2192
641212	2187, 2192
641213	2187
641214	2187
641215	2187, 2193
641216	2187, 2193
641217	2201, 2202
641218	2201, 2202
641219	2201, 2202
641220	2201, 2202
641221	2201, 2202
641222	2201, 2202
641223	2201, 2202
641224	2201, 2202
641225	2201, 2202
641226	2201, 2202
641227	2201
641228	2201
641229	2201
641230	2201
641231	2201
641232	2201
641233	2201
641234	2201
641235	2201
641236	2201
641237	2187, 2188
641238	2187, 2188
641239	2187, 2188
641240	2187, 2188
641241	2187, 2188
641242	2187, 2188
641243	2187, 2188
641244	2187, 2188
641260	5003
641261	5004
641262	5004
641264	5004
641266	5004
641267	5004

Products for Industrial & Commercial Applications

Dimensions are shown for reference purposes only.

Dimensions are in inches and millimeters unless otherwise specified. Values in brackets are metric equivalents.

Specifications subject to change.

Technical Support Center
1-800-522-6752
www.tycoelectronics.com

Part Number	Page Number
641268	5004
641294	9070, 9084
641296	5003
641300	9070
641301	2200
641302	2200
641303	2200
641304	2200
641305	2200
641306	2200
641307	2200
641308	2200
641309	2200
641310	2200
641311	2186, 2188
641312	2186, 2188
641313	2186, 2188
641314	2186, 2188
641321	7124
641333	1147
641334	1148
641335	1147
641337	1147
641425	2206
641426	2206
641427	2206
641428	2206
641429	2206
641435	2206
641436	2206
641437	2206
641438	2206
641439	2206
641440	2205
641522	2206
641523	2206
641524	2206
641525	2206
641526	2206
641533	2205
641534	2186, 2188
641535	2186, 2188
641536	2186, 2188
641537	2186, 2188
641599	5003
641600	5003
641602	5003
641604	5003
641605	5003
641606	5003
641609	5003
641610	5003
641611	5003
641612	5003
641614	5003
641615	5003
641616	5003
641623	2205
641643	2189
641644	2189
641645	2189
641646	2189
641653	2186, 2188
641654	2186, 2188
641655	2186, 2188
641656	2186, 2188
641685	12023
641737	9031, 9039
641763	9021
641764	9016
641765	9016
641766	9016
641767	9016
641768	9016
641769	9016
641770	9016
641771	9016
641775	9021
641776	9009, 9021
641777	9021
641778	9021
641825	9016, 9025
641828	9016, 9025
641831	9016, 9025
641832	9016, 9025
641855	5003
641932	5003
641933	5003
641945	9009, 9021
641963	9016, 9025
641964	9004, 9010, 9016, 9025
641965	9016, 9025
641966	9004, 9010, 9016, 9025
641967	9016, 9025
641968	9004, 9010, 9016, 9025
641969	9016, 9025
641970	9004, 9010, 9016, 9025
641971	9016, 9025
641972	9004, 9010, 9016, 9025
641973	9016, 9025
641974	9004, 9010, 9016, 9025
641975	9016, 9025
641976	9004, 9010, 9016, 9025
641994	2189, 2197
643030	9009, 9021
643067	2204
643071	2204
643075	2190
643077	2190
643182	9021
643226	9004, 9012, 9016, 9028
643228	9004, 9012, 9016, 9028
643230	9004, 9012, 9016, 9028
643232	9004, 9012, 9016, 9028
643234	9016, 9028
643235	9028
643236	9028
643237	9028
643266	12024
643267	12023
643268	12024
643313	9021
643314	9021
643326	9016
643405	9016, 9025
643406	9004, 9010, 9016, 9025
643407	9016, 9025
643408	9016, 9025
643410	9016, 9025
643411	9016, 9026
643412	9004, 9011, 9016, 9026
643413	9016, 9026
643414	9004, 9011, 9016, 9026
643415	9016, 9026
643416	9004, 9011, 9016, 9026
643423	9016, 9026
643424	9004, 9011, 9016, 9026
643425	9016, 9026
643426	9004, 9011, 9016, 9026
643428	9004, 9011, 9016, 9026
643429	9016, 9026
643430	9004, 9011, 9016, 9026
643488	9030, 9039
643495	2208
643498	2186, 2188
643574	5003
643576	5003
643585	9021
643640	5019
643641	5019
643642	5019
643643	5019
643644	5019
643645	5019
643646	5019
643647	5019
643648	5019
643649	5019
643650	5019
643651	5019
643652	5019
643653	5019
643654	5019
643655	5019
643656	5019
643657	5019
643661	5019
643662	5019
643749	9025
643813	2186, 2188
643814	2186, 2188
643815	2186, 2188
643816	2186, 2188
643817	2200, 2202
643818	2200, 2202
643819	2200, 2202
643820	2200
643821	2200
643828	2186, 2188
644018	5007
644020	2187, 2188
644038	2187, 2188
644040	2187, 2188
644042	2187, 2188
644043	2187, 2188
644044	2187, 2188
644082	2200
644083	2186, 2188
644284	2201, 2202
644312	2186, 2188
644313	2186, 2188
644322	2210, 2214
644329	2212, 2213
644343	2188
644370	2212, 2213
644371	2212, 2213
644375	2212, 2213
644376	2212, 2213
644377	2212, 2213
644381	2212, 2213
644382	2212, 2213
644383	2212, 2213
644387	2212, 2213
644388	2212, 2213
644389	2212, 2213
644456	2186, 2192
644457	2186, 2192
644460	2201, 2202
644461	2200, 2202
644462	2200, 2202
644463	2200, 2202
644464	2200
644465	2200, 2203
644466	2200, 2203
644467	2200, 2203
644468	2200, 2203
644469	2200, 2203
644470	2200, 2203
644471	2200, 2203
644472	2200, 2203
644486	2186, 2196
644487	2187, 2196
644488	2186, 2196
644489	2187, 2196
644497	2186, 2188
644501	2200
644502	2200
644508	2213
644509	2213
644510	2213
644511	2186, 2188
644512	2186, 2188
644513	2186, 2188
644514	2186, 2188
644540	2186, 2188
644563	2186, 2188
644564	2186, 2188
644565	2186, 2188
644566	2200
644567	2200
644569	2200
644570	2200
644572	2200
644574	2186, 2188
644575	2186, 2188
644576	2186, 2188
644577	2186, 2188
644578	2186, 2188
644579	2186, 2188
644611	2200, 2209, 2212, 2214
644612	2200, 2214
644613	2200, 2209, 2212, 2214
644614	2214
644615	2209, 2212, 2214
644616	2214
644617	2209, 2212, 2214
644627	2201, 2209, 2214
644628	2201, 2214
644629	2201, 2209, 2214
644630	2201, 2214
644631	2201, 2209, 2214
644632	2201, 2214
644633	2201, 2209, 2214
644662	2201
644663	2201
644687	2201, 2202
644694	2186, 2192
644695	2186, 2192
644702	2187, 2188
644718	2201
644720	2201
644726	2187, 2188
644749	2200, 2207, 2212, 2214
644750	2200, 2207, 2214
644751	2200, 2207, 2212, 2214
644752	2200, 2208, 2212, 2214
644753	2200, 2208, 2214
644754	2200, 2208, 2212, 2214
644755	2200, 2214
644756	2201, 2207, 2214
644757	2201, 2207, 2214
644758	2201, 2207, 2214
644759	2201, 2208, 2214
644760	2201, 2208, 2214
644761	2201, 2208, 2214
644762	2201, 2214
644763	2201, 2207
644764	2201, 2207
644765	2201, 2207
644766	2201, 2208
644767	2201, 2208
644768	2201
644769	2201
644783	2200
644791	2200
644795	2186, 2188
644803	2186, 2196
644807	2206
644809	2206
644812	2206
644814	2206
644860	2200
644861	2186, 2196
644874	2186, 2193
644875	2186, 2193
644876	2186, 2193
644877	2186, 2193
644878	2200
644884	2187, 2192
644885	2187, 2192
644886	2187, 2192
644887	2187, 2192
644888	2187, 2192
644889	2187, 2192
644890	2187, 2192
644891	2187, 2192
644892	2186, 2198
644893	2186, 2198
644894	2186, 2198
644895	2186
644896	2187, 2198
644897	2187, 2198
644898	2187, 2198
644899	2187
645169	2017
645235	2016
645384	2015
646166	3065
646236	3063
646237	3064
646238	3064
646239	3064
646240	3064
646241	3064
646242	3064
646243	3061
646244	3062
646245	3062
646273	3043
646346	3029
646347	3029
646356	3029
646357	3029
646362	3029
646372	3029
646373	3029
646375	3029
646376	3029
646428	3031
646430	3031
646442	3031
646445	3031
646446	3031
646447	3031
646457	3029
646474	3043
646476	3038
646477	3038
646478	3038
646479	3038
646480	3038

Products for Industrial & Commercial Applications

Dimensions are shown for reference purposes only.

Dimensions are in inches and millimeters unless otherwise specified. Values in brackets are metric equivalents.

Specifications subject to change.

Technical Support Center
1-800-522-6752
www.tycoelectronics.com

Part Number	Page Number
646481	3038
646482	3038
646483	3038
646484	3038
646486	3031
646487	3031
646492	3031
646493	3031
646513	3029
646514	3029
646525	3038
646538	3033
646539	3033
646540	3033
646661	3063
647000	2191
647001	2191
647002	2191
647003	2191
647004	2191
647005	2191
647006	2191
647007	2191
647008	2191
647009	2191
647010	2191
647011	2191
647012	2191
647013	2191
647014	2191
647015	2191
647016	2191
647017	2191
647018	2191
647019	2191
647020	2191
647021	2191
647022	2191
647023	2191
647030	2191
647031	2191
647032	2191
647033	2191
647047	2186, 2194
647048	2186, 2194
647049	2186
647050	2186, 2194
647051	2186, 2194
647075	2187, 2194
647076	2187, 2194
647077	2187
647078	2187, 2194
647079	2187, 2194
647102	2186
647103	2187
647104	2187
647106	2186, 2195
647107	2187, 2195
647108	2187, 2195
647109	2187, 2194
647110	2187
647111	2187
647112	2187
647113	2187
647114	2187, 2194
647115	2187
647116	2187, 2194
647117	2187, 2194
647123	2200, 2211, 2212
647124	2200, 2211
647125	2200, 2211, 2212
647126	2200, 2211, 2212
647127	2200, 2211, 2212
647128	2200, 2211
647129	2200, 2212
647130	2200, 2212
647131	2201, 2211
647132	2201, 2211
647133	2201, 2211
647134	2201, 2211
647135	2201, 2211
647136	2201, 2211
647137	2201
647138	2201
647139	2201, 2211
647140	2201, 2211
647141	2201, 2211
647142	2201, 2211
647143	2201, 2211
647144	2201, 2211
647145	2201
647146	2201
647166	2186, 2195
647167	2187, 2195
647168	2187, 2195
647185	2200, 2212, 2214
647186	2200, 2214
647187	2200, 2212, 2214
647188	2200, 2212, 2214
647189	2200, 2214
647190	2200, 2212, 2214
647191	2200, 2214
647192	2200, 2214
647193	2201, 2214
647194	2201, 2214
647195	2201, 2214
647196	2201, 2214
647197	2201, 2214
647198	2201, 2214
647199	2201
647200	2201
647201	2201
647202	2201
647203	2201
647204	2201
647205	2201
647206	2200, 2212, 2214
647207	2200, 2214
647208	2200, 2212, 2214
647209	2200, 2212, 2214
647210	2200, 2214
647211	2200, 2212, 2214
647212	2200, 2214
647213	2201, 2214
647214	2201, 2214
647215	2201, 2214
647216	2201, 2214
647217	2201, 2214
647218	2201, 2214
647219	2214
647220	2201
647221	2201
647222	2201
647223	2201
647224	2201
647225	2201
647226	2201
647227	2200, 2212, 2214
647228	2200, 2214
647229	2200, 2212, 2214
647230	2200, 2214
647231	2201, 2214
647232	2201, 2214
647233	2201, 2214
647234	2201, 2214
647236	2214
647237	2214
647238	2214
647239	2214
647240	2214
647241	2214
647242	2214
647243	2214
647244	2214
647245	2214
647246	2214
647247	2214
647248	2214
647249	2214
647250	2214
647251	2214
647260	2210, 2214
647261	2210, 2214
647262	2210, 2214
647263	2186
647264	2186
647295	2194
647296	2194
647297	2194
647298	2194
647299	2194
647300	2194
647400	2214, 2217
647401	2214, 2217
647402	2214, 2217
647406	2217
647409	2217
647466	2217
647485	2217
648219	2201
650025	2012, 2013, 2014, 2015, 2016, 2017
650090	2008
650091	2009
650092	2008
650118	2015
650181	2008
650187	2015
650207	2013
650263	2012
650362	3082
650363	3082
650369	3079
650404	3092
650405	3092
650406	3092
650408	3092
650437	3105
650458	3092
650459	3092
650461	3104
650462	3104
650466	3092
650470	3101
650473	3085, 3091
650477	3101
650478	3091
650479	3101
650502	3083
650512	3066
650582	9052, 9084
650616	2017
650719	2010
650867	3104
650868	3104
650869	3104
650870	3104
650871	3104
650874	3104
650875	3104
650877	3104
650889	3102
650893	3104
650895	3104
650896	3104
650897	3104
650899	3104
650906	3091
650907	3091
650908	3101
650909	3102
650910	3101
650911	3101
650912	3102
650913	3091
650914	3091
650915	3091
650916	3091
650917	3102
650918	3102
650919	3101
650920	3102
650921	3102
650922	3101
650923	3102
650924	3102
650930	3102
650931	3102
650932	3102
650933	3101
650934	3101
650935	3101
650936	3101
650945	3091
650947	3091
650948	3091
650949	3091
650950	3091
650951	3091
650956	3092
650958	3104
650959	3104
650963	3092
650978	3091
650983	3092
654073	3091
654173	2259
654174	7111
662300	13018
662600	2159, 13019
662820	2177, 13022
664614	2200
664615	2200
664616	2200
664617	2200
670786	7131
671366	7128
671510	7129
672180	7131
676515	3029
677410	2259
677412	2259
677420	3048
677427	3048
677430	2266, 3048
677463	2259
678926	9017
679235	1019
679300	7067
679301	7019, 7151
679302	7019, 7151
679303	7019
679304	10007, 10008, 10009, 10010, 10011, 10012, 10013, 10022, 10023, 10024, 10025, 10031, 10032, 10033, 10034
679305	7067
679450	7145
679451	7145
679452	7145
679453	7145
679454	7145
679455	7145
679456	7145
679457	7145
679977	3057
679980	3046, 3047, 3050, 3057
680109	7077
680114	9103
680140	7111
680161	7113
680195	9111
680197	9111
680447	12037
680449	12037
680582	9084
680602	9101
680893	9067
680894	9067
686262	7089
687113	7091
687393	7130
687436	7128
687620	4040
687658	7067, 7124
687727	7129
687763	9017, 9018, 9024, 9032, 9083, 9084
687765	9084
687784	7128
687787	7128
687801	7089
687803	7129
687806	7129
687810	7131
687811	7127, 7128
687813	7129
687815	7129
687817	7129
687819	7127
687821	7127
687823	7077, 7079
687832	7127, 7128, 7129
687833	7131
687835	7129
687839	7109
687841	7130
687843	7127
687852	7086
687855	7127
687857	7077, 7078, 7079
687858	7127
687859	7131
687861	7129
687864	7129
687870	7086
687873	7127
687875	7077, 7078, 7079
687881	7127
687892	7090
687896	7090
687898	9032, 9084
687914	7132
687926	9017, 9018, 9083
687927	7085
687928	7086, 7087
687931	7077
687933	7088
687938	7086
687940	7108
687941	7078
687942	7080
687943	7080
687944	7077

Products for Industrial & Commercial Applications

Dimensions are shown for reference purposes only.

Dimensions are in inches and millimeters unless otherwise specified. Values in brackets are metric equivalents.

Specifications subject to change.

Technical Support Center
1-800-522-6752
www.tycoelectronics.com

Part Number	Page Number
687954	7090
687961	7127
687962	7130
687967	7090
687969	7128
687996	9078, 9084
690675	2224, 2227
722560	2248
722561	2248
724663	2249
724674	2249
724676	2249
724687	2252
724762	2252
725840	9103
733278	2259
733280	2259
734024	2259
734155	2259
743890	1068
745031	1094
745036	1040
745051	1090
745052	1090
745053	1090
745054	1090
745055	1090
745057	1091
745058	1091
745059	1091
745060	1091
745071	1090
745072	1090
745073	1090
745074	1090
745075	1090
745076	1091
745077	1091
745078	1091
745079	1091
745080	1091
745081	1048
745082	1048
745112	1078
745113	1078
745114	1078
745115	1078
745116	1078
745129	1056, 1057
745130	1056, 1057
745131	1073
745132	1073
745134	1048
745135	1040
745136	1058
745171	1054, 1056
745172	1054, 1056
745173	1054, 1056
745174	1054, 1057
745175	1054, 1057
745182	1086
745183	1087
745185	1087
745186	1086
745187	1087
745189	1087
745191	1087
745201	1027
745203	1027
745205	1027
745207	1027
745209	1027
745211	1027
745213	1027
745215	1027
745229	1043, 9107
745230	1043, 9107
745245	1064
745253	1043, 9106
745254	1043, 9106
745255	1062
745271	1073
745286	1064
745306	1053
745311	1053
745337	1094
745351	1077
745352	1077
745353	1077
745354	1077
745355	1077
745392	1073
745393	1073
745394	1073
745395	1073
745396	1073
745397	1073
745403	1063
745404	1060
745407	1060
745410	1086
745411	1086
745412	1086
745413	1086
745414	1086
745434	1074
745435	1074
745436	1074
745437	1074
745438	1074
745439	1074
745440	1074
745441	1074
745454	1094
745456	1094
745458	1094
745459	1094
745461	1094
745463	1094
745465	1094
745491	1028
745492	1028
745493	1028
745494	1028
745495	1028
745496	1028
745497	1028
745498	1028
745508	1056, 1057
745536	1078
745547	1050
745550	1050
745553	1050
745560	1050
745563	1059
745578	1060
745583	1060
745584	1060
745588	1094
745589	1094
745599	1094
745612	1094
745647	1058
745652	1056
745653	1056
745776	1065
745777	1065
745779	1062
745781	1070
745782	1070
745783	1070
745784	1070
745820	1087
745833	1054, 1056
745844	1040, 1054, 1056
745854	1054, 1056
745883	1040
745886	1087
745906	1040
745907	1040
745908	1040
745909	1040
745918	1056
745922	1092
745925	1092
745928	1092
745959	1086
745964	1078
745967	1089
745968	1088
745984	1080
745988	1080
745990	1079
745992	1080
745994	1079
745996	1080
746285	4009
746288	4009
746290	4008
746383	4026
747020	1078
747021	1078
747022	1077
747024	1065
747025	1065
747043	1035
747051	1038
747052	1036
747053	1037
747080	1064
747089	1092
747090	1092
747091	1092
747098	1054, 1057
747099	1054, 1056
747100	1054, 1057
747140	1092
747141	1092
747142	1092
747143	1092
747144	1092
747145	1092
747150	1089
747190	1087
747193	1078
747194	1056
747197	1077
747223	1059
747236	1069
747238	1069
747242	1061
747250	1069
747252	1069
747275	1035, 1036, 1037
747299	1089
747301	1089
747302	1087
747303	1036
747306	1035
747315	1087
747318	1038
747321	1037
747375	1088
747404	1059
747412	1065
747418	1076
747444	1077
747455	1094
747459	1082
747460	1082
747461	1082
747462	1082
747467	1084
747468	1084
747470	1084
747497	1077
747515	1029
747516	1030
747522	1041
747523	1041
747531	1029
747532	1030
747538	1041
747539	1041
747547	1029
747548	1030
747554	1041
747555	1041
747563	1029
747564	1030
747570	1041
747571	1041
747577	1041
747578	1041
747579	1024
747580	1024
747704	1088
747706	1089
747707	1089
747708	1089
747709	1089
747713	1092
747714	1092
747715	1092
747717	1063
747740	1028
747741	1028
747746	1054
747824	1048
747832	1079
747833	1079
747834	1079
747835	1079
747836	1080
747837	1080
747838	1080
747839	1080
747840	1069
747841	1069
747842	1069
747843	1069
747844	1070
747845	1070
747846	1070
747847	1070
747848	1075
747849	1075
747850	1075
747852	1076
747853	1076
747854	1076
747871	1088
747872	1088
747877	1059
747904	1045
747905	1045
747908	1045
747909	1045
747912	1045
747913	1045
747916	1045
747917	1045
747943	1032
747944	1031
747945	1032
747946	1031
747947	1032
747948	1031
747949	1032
747950	1031
747951	1042
747952	1042
747953	1042
747954	1042
747955	1042
747956	1042
747957	1042
747958	1042
747959	1042
747960	1042
747973	1054
748003	1088
748026	1088
748027	1088
748046	1046
748047	1046
748048	1046
748049	1046
748050	1046
748051	1046
748052	1046
748078	1061
748090	1093
748146	1093
748270	1059
748271	1059
748333	1025
748364	1021
748365	1021
748366	1021
748367	1021
748368	1021
748390	1068
748394	1068
748468	1022
748469	1022
748470	1022
748471	1022
748472	1022
748473	1023
748474	1023
748475	1023
748476	1023
748477	1023
748481	1068
748482	1068
748483	1068
748485	1092
748526	1041
748536	1041
748558	1059
748565	1021
748566	1021
748567	1021
748568	1021
748569	1021
748610	1025
748612	1089
748634	1022
748635	1022
748636	1022
748638	1022
748639	1023
748640	1023
748641	1023
748642	1023
748650	1092
748676	1054
748677	1054
748678	1054
748688	1092
748696	1021
748826	1084
748865	1071
748872	1084
748873	1084
748901	1072
748904	1071

Products for Industrial & Commercial Applications

Dimensions are shown for reference purposes only.

Dimensions are in inches and millimeters unless otherwise specified. Values in brackets are metric equivalents.

Specifications subject to change.

Technical Support Center
1-800-522-6752
www.tycoelectronics.com

Part Number	Page Number
748907	1081
748909	1081
748948	1082
748952	1084
748953	1084
748979	1072
748981	1072
748989	1081
748993	1083
749014	1086
749069	1006
749070	1007
749080	1014
749081	1014
749086	1017
749087	1017
749180	1143
749181	1143
749190	1016
749192	1016
749193	1016
749195	1016
749196	1016
749199	1016
749201	1016
749202	1016
749204	1016
749205	1016
749206	1016
749210	1013
749230	1143
749231	1143
749232	1143
749264	1143
749265	1143
749266	1143
749268	1143
749270	1143
749274	1143
749608	1016
749609	1016
749639	1067
749699	1013
749717	1021
749763	1041
749765	1059
749767	1067
749768	1067
749769	1067
749771	1067
749854	1014
749889	1016
749892	1093
749914	1049
749915	1049
749916	1049
750060	1093
750069	1143
750071	1143
750073	1143
750078	1049
750100	1049
750101	1049
750131	1145
750315	1145
750317	1145
750319	1145
750327	1145
750329	1145
750337	1145
750338	1145
750340	1145
750636	1041
750644	1003, 1005, 1017
750678	1089
750730	1145
750877	1011

Part Number	Page Number
750913	1010
750987	1049
755332	2249
755333	2252
757099	1056
757275	1038
759980	2245
760700	13019
761420	1033, 1136
761900	13019
762637	1018
767003	3013
767004	3016
767005	3014
767006	3015
767007	3011
767039	3015
767044	3018
767054	3016
767055	3015
767056	3011
767057	3014
767087	3013
767089	3018
767094	3017
767095	3017
767139	3012
767140	3012
767511	3019
767514	3019
767522	3019
767523	3019
767526	3019
767527	3019
767530	3019
767532	3019
767570	3019
768211	3109, 3110
768216	3109
768338	1019, 1136
768340	1136, 3110, 13014
768351	1136
768352	3110
768625	7019
768758	3067
768783	3067
768784	3067
768900	1109
770003	9005, 9083
770004	9005, 9083
770005	9005, 9083
770006	9005, 9083
770007	9005, 9083
770008	9005, 9083
770009	9005, 9083
770010	9005, 9083
770011	9005, 9083
770012	9005, 9083
770016	9004, 9006, 9008, 9010, 9011, 9012, 9013, 9025, 9026, 9028
770017	9004, 9006, 9008, 9010, 9011, 9012, 9013, 9025, 9026, 9027, 9028
770018	9004, 9006, 9008, 9010, 9011, 9012, 9013, 9025, 9026, 9027, 9028
770019	9004, 9006, 9008, 9010, 9011, 9012, 9013, 9025, 9026, 9027, 9028

Part Number	Page Number
770020	9004, 9007, 9008, 9010, 9011, 9013, 9025, 9026
770021	9004, 9007, 9008, 9010, 9011, 9013, 9025, 9026
770022	9004, 9007, 9008, 9010, 9011, 9013, 9025, 9026
770023	9004, 9007, 9008, 9010,
770023	9011, 9013, 9025, 9026
770024	9004, 9006, 9008, 9013
770025	9004, 9006, 9008, 9013
770026	9004, 9006, 9008, 9013
770027	9004, 9007, 9008, 9013
770028	9004, 9007, 9008, 9013
770029	9004, 9007, 9008, 9013
770030	9004, 9007, 9008, 9013
770031	9008
770032	9008
770033	9008
770034	9008
770035	9008
770036	9008
770037	9008
770038	9008
770039	9008
770040	9008
770041	9008
770042	9008
770043	9008
770044	9008
770045	9008
770046	9008
770047	9008
770048	9008
770049	9008
770050	9008
770051	9008
770052	9008
770053	9008
770054	9008
770055	9008
770056	9008
770057	9008
770058	9008
770063	9046
770064	9046
770065	9046
770066	9046
770068	9046
770069	9046
770070	9046
770071	9046
770073	9046
770074	9046
770075	9046
770076	9046
770077	9046
770078	9046
770083	9046
770084	9046
770085	9046
770086	9046
770087	9046
770088	9046
770089	9046
770090	9046
770091	9046
770092	9046
770093	9046

Part Number	Page Number
770094	9046
770095	9046
770096	9046
770097	9046
770098	9046
770099	9046
770100	9046
770101	9046
770102	9046
770103	9046
770105	9046
770106	9046
770107	9046
770108	9046
770113	9016
770114	9016
770143	9016, 9025
770144	9045
770145	9045
770146	9045
770147	9045
770149	9038
770156	9031, 9039
770166	9051, 9055, 9059, 9063
770170	9051, 9055, 9059, 9063
770174	9051, 9055, 9059, 9063
770178	9051, 9055, 9059, 9063
770182	9051, 9055, 9059, 9063
770186	9051, 9055, 9059, 9063
770190	9051, 9055, 9059, 9063
770193	9005, 9083
770194	9005, 9083
770208	9016
770209	9016
770210	9083
770232	9039
770233	9039
770234	9083
770246	9005
770247	9005
770248	9005
770249	9005
770250	9005
770251	9005
770252	9005
770253	9005
770254	9005
770255	9005
770258	2215
770262	9016, 9026
770264	9046
770266	9046
770269	9048
770272	9025
770274	9079
770275	9079
770276	9048
770277	9079
770278	9079
770319	9008
770320	9008
770321	7162
770324	7162
770326	9079
770328	9031, 9037
770329	9048
770330	9048
770331	9079
770332	9079
770333	9079
770334	9079
770335	9079
770336	9048

Part Number	Page Number
770337	9048
770338	9048
770339	9048
770340	9079
770341	9079
770342	9079
770343	9079
770351	9025
770353	9079
770354	9079
770355	9079
770356	9079
770360	9048
770361	9048
770364	9045, 9049
770365	9045, 9049
770372	9048
770373	9048
770377	9009, 9023, 9024
770383	9045, 9084
770385	9045, 9084
770416	9005
770419	9079
770421	9016, 9019
770424	9049
770425	9049
770426	9079
770427	9079
770428	9079
770429	9079
770433	9079
770441	9079
770442	9079
770443	9079
770450	9045, 9049
770451	9045, 9049
770452	9045, 9049
770453	9045, 9049
770476	2215, 2216
770512	9005
770522	2215
770524	7162
770526	9031
770529	9045, 9084
770530	9045, 9084
770579	9055, 9056, 9057, 9059, 9062, 9063, 9064, 9065
770580	9055, 9056, 9057, 9059, 9062, 9063, 9064, 9065
770581	9055, 9057, 9059, 9062, 9063, 9065
770582	9055, 9057, 9059, 9062, 9063, 9065
770583	9055, 9057, 9059, 9062, 9063, 9065
770584	9055, 9057, 9059, 9062, 9063, 9065
770585	9055, 9057, 9059, 9062, 9063, 9065
770586	9055, 9057, 9059, 9062, 9063, 9065
770587	9055, 9057, 9059, 9062, 9063, 9065
770602	2186, 2187
770621	9051, 9055, 9059, 9063
770672	9017
770673	9017
770743	9051, 9055, 9059, 9063
770746	2215
770771	9048

Products for Industrial & Commercial Applications

Dimensions are shown for reference purposes only.

Dimensions are in inches and millimeters unless otherwise specified. Values in brackets are metric equivalents.

Specifications subject to change.

Technical Support Center
1-800-522-6752
www.tycoelectronics.com

Part Number	Page Number
770782	9046
770783	9049
770784	9049
770785	9049
770810	9049
770827	9031, 9034, 9039
770829	9031, 9038, 9039
770834	9060, 9084
770835	9060, 9084
770842	9046
770843	9046
770846	9031, 9039
770849	2214, 2216
770858	9051, 9055, 9059, 9063
770859	9051, 9055, 9059, 9063
770872	9051, 9055, 9059, 9063
770873	9051, 9055, 9059, 9063
770874	9051, 9055, 9059, 9063
770875	9051, 9055, 9059, 9063
770876	9051, 9055, 9059, 9063
770892	9046
770894	2218
770901	9060, 9084
770902	9060, 9084
770903	9060, 9084
770904	9060, 9084
770966	9051, 9057, 9059, 9065
770967	9051, 9057, 9059, 9065
770968	9051, 9057, 9059, 9065
770969	9051, 9057, 9059, 9065
770970	9051, 9057, 9059, 9065
770971	9051, 9057, 9059, 9065
770972	9051, 9057, 9059, 9065
770973	9051, 9057, 9059, 9065
770974	9051, 9057, 9059, 9065
770983	9078
770985	9060
770986	9060
770987	9060
770988	9060
770994	9028
770997	9031, 9038
786534	1093
786554	1008
786555	1009
786556	1008
786557	1009
786580	1144
786583	1021
786585	1017
786830	1093
786831	1093
786860	1013
786925	2230
786929	1041
787033	1054
787082	1005
787083	1005
787169	1004
787170	1004
787171	1003
787176	1093
787177	1093
787190	1003
787266	1003
787362	1004
787394	1005
787395	1005
787543	1014
787610	9124
787683	1089
787685	1089
787686	1088
787908	1041
788085	9101
788088	9101
788109	12037
788110	12037
788130	9127
788153	9144
788154	9144
788155	9144
788157	9144
788158	9144
788159	9144
788188	9145
788189	9145
788458	1093
788792	1069
788793	1069
788794	1069
788795	1069
788796	1070
788797	1070
788798	1070
788799	1070
788800	1070
788801	1070
788802	1070
788803	1070
790319	7111
794000	9070, 9084
794001	9070
794012	9030
794015	9046
794016	9078
794017	9078
794018	9078
794019	9078
794036	9031, 9039
794040	9051, 9055, 9059, 9063
794044	9059
794046	9078, 9084
794058	9060
794059	9060
794061	9043
794065	9051, 9055, 9059, 9063
794066	9051, 9055, 9059, 9063
794067	9051, 9055, 9059, 9063
794068	9051, 9055, 9059, 9063
794069	9051, 9055, 9059, 9063
794070	9051, 9055, 9059, 9063
794071	9051, 9055, 9059, 9063
794072	9051, 9055, 9059, 9063
794073	9051, 9055, 9059, 9063
794074	9051, 9055, 9059, 9063
794075	9051, 9055, 9059, 9063
794076	9051, 9055, 9059, 9063
794077	9051, 9055, 9059, 9063
794078	9051, 9055, 9059, 9063
794079	9051, 9055, 9059, 9063
794096	9016, 9019
794103	9078, 9084
794105	9051, 9057, 9059, 9065
794106	9051, 9057, 9059, 9065
794107	9051, 9057, 9059, 9065
794108	9051, 9057, 9059, 9065
794120	9030, 9039
794124	9079
794130	9051, 9059
794132	9031, 9034
794138	9087
794139	9087
794140	9087
794141	9087
794142	9087
794184	9051, 9053, 9055, 9057, 9063, 9065
794185	9051, 9053
794186	9051, 9053, 9055, 9057, 9063, 9065
794187	9051, 9053
794188	9051, 9053, 9055, 9056, 9057, 9063, 9064, 9065
794189	9051, 9053
794190	9051, 9053, 9055, 9056, 9057, 9063, 9064, 9065
794191	9051, 9053
794192	9051, 9054, 9055, 9056, 9057, 9063, 9064, 9065
794193	9051, 9054
794194	9051, 9054, 9055, 9056, 9063, 9064
794195	9051, 9054
794196	9051, 9054, 9055, 9056, 9057, 9063, 9064, 9065
794197	9051, 9054
794198	9051, 9054, 9055, 9057, 9063, 9065
794199	9051, 9054
794200	9051, 9054, 9055, 9056, 9063, 9064
794201	9051, 9054
794202	9051, 9054, 9055, 9057, 9063, 9065
794203	9051, 9054
794204	9051, 9054, 9055, 9056, 9063, 9064
794205	9051, 9054
794206	9051, 9054, 9055, 9057, 9063, 9065
794207	9051, 9054
794208	9051, 9054, 9055, 9057, 9063, 9065
794209	9051, 9054
794210	9051, 9054, 9055, 9057, 9063, 9065
794211	9051, 9054
794212	9051, 9054, 9055, 9057, 9063, 9065
794213	9051, 9054
794214	9051, 9054, 9055, 9057, 9063, 9065
794215	9051, 9054
794216	9052, 9084
794217	9052, 9084
794218	9052, 9084
794219	9052, 9084
794220	9052, 9084
794221	9052, 9084
794222	9052, 9084
794223	9052, 9084
794224	9052
794225	9052
794226	9052
794227	9052
794228	9052
794229	9052
794230	9052
794231	9052
794236	9031, 9037
794237	9051, 9053
794238	9051, 9053
794239	9051, 9053
794240	9051, 9053
794241	9051, 9053
794242	9051, 9053
794243	9051, 9053
794244	9051, 9053
794245	9051, 9054
794246	9051, 9054
794247	9051, 9054
794248	9051, 9054
794249	9051, 9054
794250	9051, 9054
794251	9051, 9054
794252	9051, 9054
794253	9051, 9054
794254	9051, 9054
794255	9051, 9054
794256	9051, 9054
794257	9051, 9054
794258	9051, 9054
794259	9051, 9054
794260	9051, 9054
794261	9051, 9054
794262	9051, 9054
794263	9051, 9054
794264	9051, 9054
794265	9054
794266	9054
794267	9051, 9054
794268	9051, 9054
794269	9023
794270	9023
794271	9023
794272	9023
794273	9023
794274	9023
794275	9023
794276	9023
794277	9023
794278	9023
794279	9023
794280	9023
794281	9023
794282	9023
794285	9038
794287	9031, 9038
794288	9052
794302	9089
794303	9089
794304	9089
794305	9089
794306	9089
794307	9090
794308	9090
794309	9091
794310	9091
794311	9092
794312	9092
794313	9093
794325	9051, 9056, 9059, 9064
794326	9051, 9056, 9059, 9064
794327	9051, 9056, 9059, 9064
794328	9051, 9056, 9059, 9064
794329	9051, 9056, 9059, 9064
794330	9051, 9056, 9059, 9064
794347	9059
794349	9089
794350	9089
794351	9089
794352	9089
794353	9089
794354	9090
794355	9090
794356	9091
794357	9091
794358	9092
794359	9092
794360	9093
794369	9053
794370	9066
794374	9065
794380	9078
794381	9024
794415	9092
794418	9087
794423	9066
794429	9091
794431	9037
794432	9056, 9064
794448	9093
794449	9093
794453	9090
794454	9091
794455	9092
794466	9089
794467	9089
794468	9089
794469	9089
794470	9090
794471	9092
794472	9093
794484	9089
794485	9089
794486	9089
794487	9089
794488	9090
794489	9090
794490	9091
794491	9091
794492	9092
794493	9092
794494	9093
794508	9093
794509	9093
794510	9093
794511	9093
794512	9093
794513	9093
794514	9093
794515	9093
794516	9093
794527	9093
794528	9093
794529	9093
794530	9093
794531	9093
794532	9093
794533	9093
794534	9093
794540	9089
794542	9088
794543	9089
794550	9088

Products for Industrial & Commercial Applications

Dimensions are shown for reference purposes only.

Dimensions are in inches and millimeters unless otherwise specified. Values in brackets are metric equivalents.

Specifications subject to change.

Technical Support Center
1-800-522-6752
www.tycoelectronics.com

Part Number	Page Number
794576	9088
794577	9088
794578	9088
794579	9088
794588	9093
794589	9093
794590	9093
794594	9088
794598	9088
794603	9010
794605	9010
794606	9067
794607	9067
794610	9067
794611	9067
794617	9067
794618	9067
794619	9067
794620	9067
794621	9067
794622	9067
794623	9067
794624	9067
794625	9067
794626	9067
794627	9067
794628	9067
794629	9067
794630	9067
794631	9067
794632	9067
794633	9067
794634	9067
794635	9067
794636	9067
794637	9067
794638	9067
794657	9087
794662	9089, 9090, 9091, 9092, 9093
794663	9089, 9090, 9091, 9092, 9093
794664	9089, 9090, 9091, 9092, 9093
794665	9089, 9090, 9091, 9092, 9093
794666	9089, 9090, 9091, 9092, 9093
794667	9089, 9090, 9091, 9092, 9093
794668	9089, 9090, 9091, 9092, 9093
794669	9089, 9090, 9091, 9092, 9093
794674	9010
794677	9067
794678	9067
794679	9067
794680	9067
794681	9067
794682	9067
794683	9043
794699	9043
794700	9042
794714	9022
794715	9022
794716	9022
794760	9022
794761	9022
794762	9022
796075	9144
796094	9144
796095	9144
796096	9144
796112	9145
796131	2264
796188	9144
796190	9144
796203	9145
796207	9145
796255	9142, 12002
796257	9142, 12002
796260	9142, 12002
796271	9144
796272	9144
796273	9144
796274	9144
796275	9144
796276	9144
796285	12005
796286	9144
796287	9144
796288	9144
796291	9144
796329	9132
796330	9145
796332	9145
796379	9140
796380	9140
796381	9140
796382	9140
796410	8045
796414	8043
796415	8044
796416	8045
796417	8043
796418	8041
796419	8041
796421	8042
796422	8046
796423	8046
796433	9126
796437	9124
796439	9125
796449	9124
796450	9125
796460	8049
796461	8049
796634	8035
796635	8035
796636	8022
796637	8022
796638	8026
796639	8026
796640	8035
796641	8035
796642	8021
796643	8021
796644	8025
796645	8025
796681	8005
796682	8005
796683	8005
796684	8009
796685	8009
796686	8006
796687	8010
796688	8012
796689	8012
796690	8012
796691	8014
796693	8034
796694	8016
796695	8023
796696	8035
796697	8021
796698	8025
796699	8021
796700	8025
796712	8044
796734	8044
796735	8042
796739	8013
796740	8013
796860	8032
796861	8033
796862	8032
796863	8033
796865	8019
796867	8019
796964	9109
796966	9109
803880	2086, 3046, 3047, 3057, 3077, 3079, 3109
811262	1059, 9210, 9213
813599	13023
813809	1056, 1057
814700	2086, 3046, 3047, 3057, 3077, 3079, 3109, 13020
815800	4040
818057	7067
818380	7067
819528	7089
820805	1135
821939	5040
821942	5040
821949	5040
821997	5022
822019	5022
822021	5022
822030	5022
822031	5022
822032	5022
822064	5040
822097	5023
822110	5023
822114	5042
822115	5042
822134	5023
822137	5023
822138	5023
822253	5040, 5042
822254	5040, 5042
822330	5023
822469	5023
822472	5035
822473	5038
822498	5034
822499	5034
830178	12008
830395	12009
830611	12008
834333	12010
836567	12010
843473	2168, 2178
843477	2127, 2133, 2150, 2151, 2153, 2154, 2157, 2162
843996	2120, 2122, 2123, 2124, 2125, 2162
852423	1018, 1033, 1109, 1136, 2159, 13018
852725	1136
853400	1151
853542	2224, 2227
853546	2224, 2227
853547	2224, 2227
854040	2177
854175	2224, 2227
854176	2227
854200	2224, 2227
854423	3067
854449	2159, 2224, 2227
854468	2224, 2227
854904	3067
856002	2159, 2162, 13017
856195	13016
856196	1152, 13016
856402	10074
856600	2224, 2227
856675	2159
856727	1151
858827	12010
858855	12009
858857	12009
858868	12010
859526	12015
861252	12008
861253	12009
861255	12010
861610	12012
861611	12012
861647	12015
861751	12015
862004	12014
862197	12012
862383	12013
862424	12021
862425	12021
862545	12008
863019	12015
863022	12015
863024	12015
863743	12021
865656	12014
866196	12020
866559	12020
867156	12011
867157	12011
867473	12016
867823	12020
867824	12020
904870	7031
909190	2245
909372	2245
911123	1109
911149	1109
911432	1109
911790	2245
915697	1109
917738	1108
919620	1109
926302	9016, 9019
926307	9016, 9019
926308	9016, 9019
926309	9016, 9019
926521	7111
926522	7111
926973	7169
927740	7168, 7169
928247	7165, 7166, 7167, 7168
928343	7165, 7166, 7167, 7168
928344	7165, 7166, 7167
928820	7169
931800	1033, 2159, 2162, 2224, 2225, 2227, 13015, 13017
933150	13003
933567	2224, 2227
933568	2224, 2227
933592	13003
943010	1139
943013	1139, 1140
943036	1140
964201	7169
964202	7169
964203	7170
964204	7170
964951	7165
969789	9142, 12002
969803	9142, 12002
969807	9142, 12002
969809	9142, 12002
969811	9142, 12002
969813	9142, 12002
969817	9142, 12002
986794	3043, 3066, 3075, 3083, 3084
1016002	9106
1016015	9106
1016605	2168
1050525	10038
1050542	10038
1050548	10038
1050591	10040
1050598	10040
1050602	10040
1050611	10040
1050718	10043
1050721	10043
1050740	10040
1050742	10040
1050757	10038
1050770	10038
1050854	10038
1050859	10038
1050900	10043
1050903	10043
1050909	10041
1050911	10041
1050996	10044
1051005	10041
1051007	10041
1051046	10039
1051052	10039
1051081	10039
1051085	10039
1051136	10044
1051140	10044
1051145	10041
1051147	10041
1051151	10040
1051157	10040
1051638	10042
1051644	10042
1051852	10042
1051855	10045
1051861	10042
1051862	10045
1051867	10045
1051869	10045
1051942	10042
1052063	10043
1052067	10043
1052072	10046
1052076	10046
1052093	10046
1052098	10046
1052324	10047
1052343	10047
1052422	10047
1052646	10048
1052652	10048
1053354	10048
1055236	10044, 10045, 10046
1055270	10044, 10045
1055420	10038, 10039, 10040, 10049
1055439	10049
1055440	10049
1055441	10049
1055442	10049
1055443	10049
1055444	10049
1055445	10049
1055446	10049
1055447	10049

Part Number	Page Number
1055448	10049
1055449	10049
1055450	10049
1055451	10049
1055454	10049
1055500	10049
1055690	10067
1055831	10049
1055832	10049
1055833	10049
1055834	10049
1055835	100040, 10041, 10049
1055836	10049
1055837	10049
1055838	10049
1055839	10049
1055840	10049
1055841	10049
1055842	10049
1055843	10049
1055880	10044, 10045
1056436	10044
1056438	10044
1056441	10044
1056443	10044
1056445	10045
1056447	10045
1056450	10045
1056452	10045
1056456	10046
1056458	10046
1056460	10046
1056462	10046
1056721	10066
1057088	10031
1057094	10031
1057116	10032
1057119	10032
1057165	10033
1057176	10033
1057374	10034
1059829	10066
1082029	10039
1082030	10040
1082034	10044
1088312	10040
1091921	10038
1115335	3047
1116518	1162
1116523	1162
1116524	1162
1116525	1162
1116526	1162
1116528	1162
1116589	1160
1116614	1157
1213098	7068
1213400	2177, 13008
1213500	7068
1214224	3055, 3057
1214315	13024
1214316	13023, 13025
1214317	13024
1214512	7068
1217083	7090
1217092	7113
1217094	7114
1217095	7114
1217102	7090
1217126	7095
1217129	7086
1217136	7095
1217137	7095, 7096
1217138	7091
1217143	7160
1217145	7090
1217156	7098
1217160	7128
1217167	7095
1217180	7095, 7096
1217190	7141
1217191	7141
1217192	7141
1217196	7141
1217198	7090
1217234	7141
1217252	7093
1218055	12019
1218124	1097
1218125	1097
1218126	1097
1218127	1097
1218134	12019
1218147	12018
1218148	12018
1218149	12018
1218150	12018
1218408	1099
1218434	1099
1218435	1099
1218436	1099
1218437	1099
1218438	1099
1218440	1098
1218441	1098
1218442	1098
1218443	1098
1218444	1098
1218445	1098
1223104	10048
1242176	3055
1251802	10067
1274035	10053
1274096	10048
1274314	10017
1274315	10017
1274360	10016
1278009	11002
1278022	11002
1278023	11002
1278049	11012
1278051	11013
1278079	11002
1278080	11002
1278082	11002
1278118	11002
1278132	11028
1278133	11028
1278134	11028
1278309	11009
1278348	11011
1278350	11012, 11013
1278471	11028
1278705	11009
1299501	13020
1311318	10034
1318725	9010
1320420	2158, 2177, 13027
1320840	1152, 13016
1320895	2158, 13011
1338083	13024
1338600	13006
1339160	1157
1339167	1160
1339212	1157
1345007	3027
1345008	3027
1374223	11012
1374370	11009
1375549	2148
1375582	2148
1375583	2148
1375618	9088
1375791	2181
1375792	2181
1375793	2180
1375794	2180
1375795	2180
1375796	2180
1375797	2182
1375798	2182
1375799	2181
1375800	2181
1375801	2184
1375819	2197
1375820	2197
1375959	2183
1375961	2183
1375963	2182
1375965	2183
1375967	2183
1385048	2217
1392019	3099
1392020	3100
1393589	3099, 3100
1393662	3099, 3100
1393668	3099
1399400	3067, 13020
1399401	3067, 13020
1399500	3067, 13020
1399501	3067
1399600	13020
1399700	13021
1424100	13025
1437661	8074
1445005	2184
1445251	2184
1445336	2197
2013800	9176
5014473	11025
ACP-3648	13020, 13021
ADE02	6003
ADE02S	6003
ADE02SA	6003
ADE03	6003
ADE03S	6003
ADE03SA	6003
ADE04	6003
ADE04S	6003
ADE04SA	6003
ADE05	6003
ADE05S	6003
ADE05SA	6003
ADE06	6003
ADE06S	6003
ADE06SA	6003
ADE07	6003
ADE07S	6003
ADE07SA	6003
ADE08	6003
ADE08S	6003
ADE08SA	6003
ADE09	6003
ADE09S	6003
ADE09SA	6003
ADE10	6003
ADE10S	6003
ADE10SA	6003
ADE12	6003
ADE12S	6003
ADE12SA	6003
ADF02	6003
ADF02S	6003
ADF02SA	6003
ADF02SAT	6003
ADF02ST	6003
ADF02STTR	6003
ADF02T	6003
ADF03	6003
ADF03S	6003
ADF03SA	6003
ADF03SAT	6003
ADF03ST	6003
ADF03STTR	6003
ADF03T	6003
ADF04	6003
ADF04S	6003
ADF04SA	6003
ADF04SAT	6003
ADF04ST	6003
ADF04STTR	6003
ADF04T	6003
ADF05	6003
ADF05S	6003
ADF05SA	6003
ADF05SAT	6003
ADF05ST	6003
ADF05STTR	6003
ADF05T	6003
ADF06	6003
ADF06S	6003
ADF06SA	6003
ADF06SAT	6003
ADF06ST	6003
ADF06STTR	6003
ADF06T	6003
ADF07	6003
ADF07S	6003
ADF07SA	6003
ADF07SAT	6003
ADF07ST	6003
ADF07STTR	6003
ADF07T	6003
ADF08	6003
ADF08S	6003
ADF08SA	6003
ADF08SAT	6003
ADF08ST	6003
ADF08STTR	6003
ADF08T	6003
ADF09	6003
ADF09S	6003
ADF09SA	6003
ADF09SAT	6003
ADF09ST	6003
ADF09STTR	6003
ADF09T	6003
ADF10	6003
ADF10S	6003
ADF10SA	6003
ADF10SAT	6003
ADF10ST	6003
ADF10STTR	6003
ADF10T	6003
ADF12	6003
ADF12S	6003
ADF12SA	6003
ADF12SAT	6003
ADF12ST	6003
ADF12STTR	6003
ADF12T	6003
ADP02	6004
ADP02S	6004
ADP02SA	6004
ADP04	6004
ADP04S	6004
ADP04SA	6004
ADP05	6004
ADP05S	6004
ADP05SA	6004
ADP06	6004
ADP06S	6004
ADP06SA	6004
ADP07	6004
ADP07S	6004
ADP07SA	6004
ADP08	6004
ADP08S	6004
ADP08SA	6004
ADP09	6004
ADP09S	6004
ADP09SA	6004
ADP10	6004
ADP10S	6004
ADP10SA	6004
ADPA02	6004
ADPA02S	6004
ADPA02SA	6004
ADPA04	6004
ADPA04S	6004
ADPA04SA	6004
ADPA05	6004
ADPA05S	6004
ADPA05SA	6004
ADPA06	6004
ADPA06S	6004
ADPA06SA	6004
ADPA07	6004
ADPA07S	6004
ADPA07SA	6004
ADPA08	6004
ADPA08S	6004
ADPA08SA	6004
ADPA09	6004
ADPA09S	6004
ADPA09SA	6004
ADPA10	6004
ADPA10S	6004
ADPA10SA	6004
AEP-12T	13020, 13021
ASE22	6012
ASE22G	6012
ASE22R	6009, 6012
ASE22RG	6012
ASE42	6012
ASE42G	6012
ASE42R	6012
ASE42RG	6012
ASE43	6012
ASE43G	6012
ASE43R	6012
ASE43RG	6012
ASE62	6012
ASE62G	6009, 6012
ASE62R	6012
ASE62RG	6012
ASF(*)22	6012
ASF(*)22G	6012
ASF(*)42	6012
ASF(*)42G	6012
ASF(*)43	6012
ASF(*)43G	6012
ASF(*)62	6012
ASF(*)62G	6012
ASF22	6009
ASF22R	6009, 6012
ASF22RG	6012
ASF42R	6012
ASF42RG	6012
ASF43R	6012
ASF43RG	6012
ASF62R	6012
ASF62RG	6012
B02C4HXXT	8009
B02C4VXXT	8005
B03C4VXXT	8006
B04C4VXXT	8012
B07C4VXXT	8014
B2EHDVXX	8022
B52C3UXXT	8034
B52C4UXXT	8035
B72N4HXXT	8025
B72N4VXXT	8021
B73N3HXXT	8023
B73N3VXXT	8016
B73N4HXXT	8025
B73N4VXXT	8021
BC6	8050

Part Number	Page Number
BC6-P108-08	8059
BMEP-3T	13020
BMEP-5T	13020
BP35F	8111
BPO05M	8111
C5	6062
C8	6062
C9	6062
C12	6062
C13	6062
C14	6062
C14L	6062
C22	6062
C23	6062
C33	6062
C330-AG	6059
C332	6059
C339	6059
CS-1	13023
D0105	8103
D0115	8103
D0125	8103
D0211	8123
D0212	8123
D0213	8123
D0221	8123
D0222	8123
D0223	8123
D0511	8117
D0514	8117
D0515	8117
D0521	8117
D0524	8117
D0525	8117
D0711	8109
D0714	8109
D0715	8109
D0721	8109
D0724	8109
D0725	8109
D105	8102, 8103
D115	8102, 8103
D125	8102, 8103
D211	8123
D212	8123
D213	8123
D221	8123
D222	8123
D223	8123
D511	8117
D514	8117
D515	8117
D521	8117
D524	8117
D525	8117
D611	8107
D614	8107
D615	8107
D621	8107
D624	8107
D625	8107
D711	8109
D714	8109
D715	8109
D721	8109
D724	8109
D725	8109
D814-BU	8128
D824	8128
DO125	8103
DP0125	8103
DP0721	8109
DP0724	8109
DP0725	8109
DP125	8102, 8103
DP621	8107
DP624	8107
DP625	8107

Part Number	Page Number
DP721	8109
DP724	8109
DP725	8109
DRD10CE	6007
DRD10CSAE	6007
DRD10CSE	6007
DRD10E	6007
DRD10SAE	6007
DRD10SE	6007
DRD16CE	6007
DRD16CSAE	6007
DRD16CSE	6007
DRD16E	6007
DRD16SAE	6007
DRD16SE	6007
E1	6067, 6068
F40	6070, 6071
F50	6070, 6071
FA0	6070, 6071
FACE-40	8082
FR0	6070, 6071
FSM 1J	6046
FSM 2J	6046
FSM 3J	6046
FSM 4J	6046
FSM 5J	6046
FSM 6J	6046
FSM 7J	6046
FSM 8J	6046
FSM 9J	6046
FSM 10J	6046
FSM 11J	6046
FSM 12J	6046
FSM 13J	6046
FSM 14J	6046
FSM 15J	6046
FSM 16J	6046
FSM 17J	6046
FSM 18J	6046
FSM100	6048
FSM101	6048
FSMRA 1J	6047
FSMRA 2J	6047
FSMRA 3J	6047
FSMRA 4J	6047
FSMRA 5J	6047
FSMRA 6J	6047
FSMRA 7J	6047
G001	6074
G11A	6062
G11B	6062
G11C	6062
G12A	6062
G12B	6062
G12C	6062
G12KA	6062
G12KB	6062
G12KC	6062
G13A	6062
G13B	6062
G13C	6062
G13KA	6062
G13KB	6062
G13KC	6062
G15	6062
GDH02S	6002
GDH02STR	6002
GDH04S	6002
GDH04STR	6002
GDH06S	6002
GDH06STR	6002
GDH08S	6002
GDH08STR	6002
GDH10S	6002
GDH10STR	6002
J2-BU	8102
J10	8102
J6140	8110

Part Number	Page Number
J6240	8110
J6340	8110
J7140	8118
J7240	8118
J7340	8118
J74	8074
J75	8074
JC6	8051
JC140	8074
K500A1/4	6078
K500A1/8	6078
K500B1/4	6078
K500B1/8	6078
K700A1/4	6078
K700B1/4	6078
K900A1/4	6078
K900B1/4	6078
K1250A1/4	6078
K1250B1/4	6078
K1251A1/4	6078
K1251B1/4	6078
K1255AS1/4	6078
K1255BS1/4	6078
KA500A1/4	6078
KA500A1/8	6078
KA500B1/4	6078
KA500B1/8	6078
KA700A1/4	6078
KA700B1/4	6078
KA900A1/4	6078
KA900B1/4	6078
KA1250A1/4	6078
KA1250B1/4	6078
KAS500A1/4	6078
KAS500A1/8	6078
KAS500B1/4	6078
KAS500B1/8	6078
KAS700A1/4	6078
KAS700B1/4	6078
KAS900A1/4	6078
KAS900B1/4	6078
KB500A1/4	6079
KB500A1/8	6079
KB500B1/4	6079
KB500B1/8	6079
KB700A1/4	6079
KB700B1/4	6079
KB900A1/4	6079
KB900B1/4	6079
KBS500A101/4	6079
KBS500A101/8	6079
KBS500B101/4	6079
KBS500B101/8	6079
KCB500A1/4	6079
KCB500A1/8	6079
KCB500B1/4	6079
KCB500B1/8	6079
KCB600A1/4	6079
KCB600A1/8	6079
KCB600B1/4	6079
KCB600B1/8	6079
KCB700A1/4	6079
KCB700B1/4	6079
KCB900A1/4	6079
KCB900B1/4	6079
KD500A1/4	6080
KD500A1/8	6080
KD500B1/4	6080
KD500B1/8	6080
KD700A1/4	6080
KD700B1/4	6080
KD900A1/4	6080
KD900B1/4	6080
KD1250A1/4	6080
KD1250B1/4	6080
KE500AB1/4	6080
KE500AB1/8	6080
KE700AB1/4	6080

Part Number	Page Number
KE900AB1/4	6080
KE1250AB1/4	6080
KES500AB1/4	6080
KES500AB1/8	6080
KES700AB1/4	6080
KES900AB1/4	6080
KFS400B1/8	6081
KFS500B1/8	6081
KFS600B1/8	6081
KHF500A1/4	6081
KHF700A1/4	6081
KHF900A1/4	6081
KHF1250A1/4	6081
KLN500A1/4	6081
KLN500A1/8	6081
KLN500B1/4	6081
KLN500B1/8	6081
KLN500S1/4	6081
KLN500S1/8	6081
KLN700A1/4	6081
KLN700B1/4	6081
KLN700S1/4	6081
KLN900A1/4	6081
KLN900B1/4	6081
KLN900S1/4	6081
KLN1250A1/4	6081
KLN1250B1/4	6081
KLN1250S1/4	6081
KLNS500A1/4	6082
KLNS500A1/8	6082
KLNS500B1/4	6082
KLNS500B1/8	6082
KLNS700A1/4	6082
KLNS700B1/4	6082
KLNS900A1/4	6082
KLNS900B1/4	6082
KN500A1/4	6083
KN500A1/8	6083
KN500AB1/4	6083
KN500AB1/8	6083
KN500B1/4	6083
KN500B1/8	6083
KN500BA1/4	6083
KN500BA1/8	6083
KN501A1/4	6082
KN501A1/8	6082
KN501B1/4	6082
KN501B1/8	6082
KN501BA1/4	6082
KN501BA1/8	6082
KN700A1/4	6083
KN700AB1/4	6083
KN700B1/4	6083
KN700BA1/4	6083
KN701A1/4	6082
KN701B1/4	6082
KN701BA1/4	6082
KN701BA1/8	6082
KN900A1/4	6083
KN900AB1/4	6083
KN900B1/4	6083
KN900BA1/4	6083
KN1250A1/8	6083
KN1250AB1/4	6083
KN1250B1/4	6083
KN1250BA1/4	6083
KN1251A1/4	6083
KN1251B1/4	6083
KN1750A1/4	6082
KN1750B1/4	6082
KN1751A1/4	6082
KN1751AB1/4	6082
KN1751AS1/4	6082
KN1751B1/4	6082
KN1751BB1/4	6082
KN1751BS1/4	6082
KN1755ABS1/4	6083
KN1755AS1/4	6083

Part Number	Page Number
KN1755BAS1/4	6083
KN1755BS1/4	6083
KN5700A1/4	6083
KN5700B1/4	6083
KNS501A1/4	6084
KNS501A1/8	6084
KNS501B1/4	6084
KNS501B1/8	6084
KNS501BA1/4	6084
KNS501BA1/8	6084
KNS701A1/4	6084
KNS701B1/4	6084
KNS701BA1/4	6084
KNS701BA1/8	6084
KPN500A1/4	6084
KPN500A1/8	6084
KPN500B1/4	6084
KPN500B1/8	6084
KPN700A1/4	6084
KPN700B1/4	6084
KPN900A1/4	6084
KPN900B1/4	6084
KS500A1/4	6084
KS500A1/8	6084
KS500B1/4	6084
KS500B1/8	6084
KS700A1/4	6084
KS700B1/4	6084
KS900A1/4	6084
KS900B1/4	6084
KSS10A	6027
KSS10B	6027
KSS20A	6027
KSS20B	6027
KT500A1/4	6085
KT500A1/8	6085
KT500B1/4	6085
KT500B1/8	6085
KT700A1/4	6085
KT700B1/4	6085
KT900A1/4	6085
KT900B1/4	6085
KT1250A1/4	6085
KT1250B1/4	6085
KU401B1/8	6085
KU402B1/8	6085
KU500B1/4	6085
KU500B1/8	6085
KU700B1/4	6085
KUS402B1/8	6085
KUS500B1/4	6085
KUS500B1/8	6085
KUS700B1/4	6085
L01	8074
L02	8074
L09	8074
L91	8074
L92	8073, 8074
LSG-1AG14-1	5011
LSG-1AG14-14	5011
LSG-1DG17-1	5011
LSG-1DG17-14	5011
M6010	6072
M6020	6072
M6057	6072
M6080	6072
M6120	6074
M6150	6074
M6153	6074
M6200	6074
M6201	6074
M6210	6074
M6250	6074
M6270	6074
M6280	6074
M6402	6073
M6410	6073
M6412	6073

Products for Industrial & Commercial Applications

Dimensions are shown for reference purposes only.

Dimensions are in inches and millimeters unless otherwise specified. Values in brackets are metric equivalents.

Specifications subject to change.

Technical Support Center
1-800-522-6752
www.tycoelectronics.com

Part Number	Page Number
M6470	6073
M6480	6073
M60532	6072
M60582	6072
M60652	6072
M65310	6073
M65500	6073
M65510	6073
M65810	6073
M8041-15G	5077
M8058-1G18	5068
M8058-1G19	5068
M8058-1G22	5068
M8058-1G23	5068
M8058-1G24	5068
M8058-1G29	5068
M8058-1G30	5068
M8058-1G31	5068
M8058-1G32	5068
M8058-1G33	5068
M8058-1G37	5068
M8058-1G38	5068
M8058-1G39	5068
M8058-1G91	5068
M8058-45G1	5068
M8058-45G2	5068
M8134-HC-5P2	5044
M8134-HC-6P2	5044
M8134-HC-8P2	5044
M8134-HC-12P2	5044
M83505/6-001	5044
M83505/6-002	5044
M83505/6-003	5044
M83505/6-004	5044
MB6	8050
MB6-P108	8061
MB6-P108-04	8061
MEP-6T	13020
MEP-12T	13020
MHS122	6020
MHS122G	6020
MHS122GRA	6021
MHS122K	6020
MHS122KG	6020
MHS122RA	6021
MHS123	6020
MHS123G	6020
MHS123GRA	6021
MHS123K	6020
MHS123KG	6020
MHS123RA	6021
MHS133	6020
MHS133G	6020
MHS133GRA	6021
MHS133K	6020
MHS133KG	6020
MHS133RA	6021
MHS222	6020
MHS222G	6020
MHS222GRA	6021
MHS222K	6020
MHS222KG	6020
MHS222RA	6021
MHS223	6020
MHS223K	6020
MHS223RA	6021
MHS233	6020
MHS233GRA	6021
MHS233K	6020
MHS233RA	6021
MHS433RA	6021
MMS12	6023
MMS22	6023
MMS22R	6023
MPA103B	6057
MPA103C	6057
MPA103D	6057
MPA103F	6057
MPB103B	6057
MPB103C	6057
MPG106D	6058
MPG106F	6058
MPG206N	6058
MPG206NPC	6058
MPG206R	6058
MPG206RPC	6058
MPG306D	6058
MPG306F	6058
MPG406N	6058
MPG406R	6058
MPS103D	6059
MPS103DPC	6060
MPS103DPCV	6060
MPS103DRA	6061
MPS103F	6059
MPS103FPC	6060
MPS103FPCV	6060
MPS103FRA	6061
MPS103FWW	6060
MPS203N	6059
MPS203NPC	6060
MPS203NRA	6061
MPS203NWW	6060
MPS203R	6059
MPS203RPC	6060
MPS203RPCV	6060
MPS203RRA	6061
MPS203RWW	6060
MPSN103F	6059
MPSR103F	6059
MPSR203F	6059
MPT-5	13022
MRD10	6005, 6006
MRD10C	6006
MRD10CS	6006
MRD10S	6005, 6006
MRD16	6006
MRD16C	6005, 6006
MRD16CS	6006
MRD16S	6005, 6006
MSP103B	6061
MSP103C	6061
MSP103C0	6061
MSP103C2	6061
MSPS103B	6061
MSPS103C	6061
MSPS103C0	6061
MTA106D	6038
MTA106DPC	6039
MTA106E	6038
MTA106EPC	6039
MTA106F	6038
MTA106FPC	6039
MTA106G	6038
MTA106GPC	6039
MTA106H	6038
MTA106HPC	6039
MTA206N	6038
MTA206NPC	6039
MTA206P	6038
MTA206PA	6038
MTA206PAPC	6039
MTA206PPC	6039
MTA206R	6038
MTA206RPC	6039
MTA206S	6038
MTA206SA	6038
MTA206SAPC	6039
MTA206SPC	6039
MTA206T	6038
MTA206TA	6038
MTA206TPC	6039
MTA306D	6038
MTA306DPC	6039
MTA306E	6038
MTA306EPC	6039
MTA306F	6038
MTA306FPC	6039
MTA306H	6038
MTA306HPC	6039
MTA406N	6038
MTA406NPC	6039
MTA406P	6038
MTA406PA	6038
MTA406PAPC	6039
MTA406PPC	6039
MTA8106DRA	6044
MTA8106DVRA	6045
MTA8106ERA	6044
MTA8106EVRA	6045
MTA8106FRA	6044
MTA8106FVRA	6045
MTA8206NRA	6044
MTA8206NVRA	6045
MTA8206PRA	6044
MTA8206PVRA	6045
MTA8206RRA	6044
MTG106D	6040
MTG106E	6040
MTG106F	6040
MTG106G	6040
MTG106H	6040
MTG126D	6041
MTG126E	6041
MTG206N	6040
MTG206P	6040
MTG206PA	6040
MTG206R	6040
MTG206S	6040
MTG206T	6040
MTG226N	6041
MTG226P	6041
MTG226PA	6041
MTG306D	6040
MTG306E	6040
MTG326D	6041
MTG406N	6040
MTG406P	6040
MTG426N	6041
MTL106D	6042
MTL106E	6042
MTL206N	6042
MTL206P	6042
MTL206PA	6042
MTL206S	6042
MTL306D	6042
MTL406N	6042
MTL406PA	6042
MTM106DPC	6043
MTM106EPC	6043
MTM106FPC	6043
MTM206NPC	6043
MTM206PAPC	6043
MTM206SPC	6043
MTM306DPC	6043
MTM406NPC	6043
MTM8106DRA	6044
MTM8106DVRA	6045
MTM8106ERA	6044
MTM8106EVRA	6045
MTM8106FRA	6044
MTM8206NRA	6044
MTM8206NVRA	6045
MTM8206PRA	6044
MTM8206PVRA	6045
MTM8206RRA	6044
MTM8206RVRA	6045
N1B	6062
N35-AG	6062
N45-AG	6062
NC6	8051
NC6-P108-03	8068
NC6-P108-04	8068
P073	8108
P0621	8106, 8107
P0624	8106, 8107
P0625	8106, 8107
P0627	8107
P0628	8106
P0629	8107
P0630	8106, 8107
P0721	8108
P0724	8108
P0725	8109
P0727	8109
P0728	8108
P0729	8109
P0730	8109
P125	8102, 8103
P130	8102
P300	13021
P621	8106
P624	8106
P625	8106
P627	8107
P628	8106
P629	8107
P630	8106, 8107
P721	8108
P724	8108
P727	8109
P728	8108
P729	8109
P730	8108, 8109
P62510	8111
PCB1A12S	8078
PCB1A18S	8078
PCB1A24S	8078
PCB1A30S	8078
PCB1A36S	8078
PCB1B06S	8079
PCB1B08S	8079
PCB1B10S	8079
PCB1B12S	8079
PCB1B15S	8079
PCB1B16S	8079
PCB1B18S	8079
PCB1B22S	8079
PCB1B24S	8079
PCB1B28S	8079
PCB1B30S	8079
PCB1B32S	8079
PCB1B36S	8079
PCB1B43S	8079
PCB2B06S	8080
PCB2B08S	8080
PCB2B09S	8080
PCB2B10S	8080
PCB2B12S	8080
PCB2B15S	8080
PCB2B16S	8080
PCB2B18S	8080
PCB2B22S	8080
PCB2B24S	8080
PCB2B28S	8080
PCB2B30S	8080
PCB2B32S	8080
PCB2B36S	8080
PCB2B43S	8080
PCB3A06S	8081
PCB3A08S	8081
PCB3A10S	8081
PCB3A12S	8081
PCB3A15S	8081
PCB3A16S	8081
PCB3A18S	8081
PCB3A20S	8081
PCB3A22S	8081
PCB3A24S	8081
PCB3A30S	8081
PCB3A32S	8081
PCB3A34S	8081
PCB3A36S	8081
PCB3A44S	8081
PCS-020A-1	5037
PCS-028A-1	5037
PCS-032A-1	5037
PCS-044A-1	5037
PCS-052A-1	5037
PCS-068A-1	5036, 5037
PCS-084A-1	5037
PH13161/4	6086
PH14171/4	6086
PH15181/4	6086
PK50B1/4	6086
PK50B1/8	6086
PK70B1/4	6086
PK90B1/4	6086
PK1100B1/4	6086
PK1100B1/8	6086
PK1108B1/4	6087
PKA50B1/4	6087
PKA50B1/8	6087
PKA55B1/8	6087
PKA70B1/4	6087
PKA90B1/4	6087
PKAP50B1/4	6087
PKAP50B1/8	6087
PKAP70B1/4	6087
PKAP90B1/4	6087
PKB70B1/4	6088
PKB90B1/4	6088
PKD60B1/4	6088
PKD60B1/8	6088
PKD60B101/4	6088
PKD60B101/8	6088
PKD70B1/4	6088
PKD70B101/4	6088
PKD100B1/4	6088
PKD100B101/4	6088
PKDT60B1/4	6089
PKDT60B1/8	6089
PKDT60B101/4	6089
PKDT60B101/8	6089
PKDT70B1/4	6089
PKDT70B101/4	6089
PKDT100B1/4	6089
PKDT100B101/4	6089
PKE60B1/4	6089
PKE60B1/8	6089
PKE90B1/4	6089
PKES60B1/4	6089
PKES60B1/8	6089
PKES70B1/4	6089
PKES90B1/4	6089
PKES120B1/4	6089
PKES140B1/4	6089
PKES150B1/4	6089
PKF50B1/4	6090
PKF50B1/8	6090
PKF70B1/4	6090
PKG40B1/8	6090
PKG50B1/4	6090
PKG50B1/8	6090
PKG60B1/4	6091
PKG60B1/8	6091
PKG70B1/4	6091
PKG70B1/8	6091
PKG90B1/4	6091
PKG90B1/8	6091
PKG100B1/8	6091
PKG1255B1/4	6091
PKGP70B1/4	6091
PKGP90B1/4	6091
PKGP100B1/4	6091
PKJ50B1/4	6091
PKJ50B1/8	6091
PKJ60B1/4	6091
PKJ70B1/4	6091
PKJT50B1/4	6092

Products for Industrial & Commercial Applications

Dimensions are shown for reference purposes only.

Dimensions are in inches and millimeters unless otherwise specified. Values in brackets are metric equivalents.

Specifications subject to change.

Technical Support Center
1-800-522-6752
www.tycoelectronics.com

Part Number	Page Number
PKJT50B1/8	6092
PKJT60B1/4	6092
PKJT70B1/4	6092
PKN60B1/4	6092
PKN60B1/8	6092
PKN70B1/4	6092
PKN90B1/4	6092
PKNT60B1/4	6092
PKNT60B1/8	6092
PKNT70B1/4	6092
PKNT90B1/4	6092
PKP194B1/4	6087
PKR125B1/4	6092
PKR175B1/4	6092
PKS90B1/4	6094
PKS90B101/4	6094
PKS1104B1/4	6093
PKS1105B101/4	6093
PKS1106B1/4	6093
PKS1132B1/4	6093
PKS1132B51/4	6093
PKS1132B91/4	6093
PKS1132B101/4	6093
PKT60B1/4	6086
PKT60B1/8	6086
PKT70B1/4	6086
PKT100B1/4	6086
PKX50B1/4	6094
PKX50B1/8	6094
PKX60B1/4	6094
PKX60B1/8	6094
PKX80B1/4	6094
PKX100B1/4	6094
PKX110B1/4	6094
PKX130B1/4	6094
QC20-BU	8074
QC21	8074
QC22	8074
QC23	8074
QC24	8074
QC25	8074
QC36	8074
QC40-BU	8074
QC-41	8074
QC-42	8074
QC-43	8074
QC-44	8074
QC-45	8074
QC-56	8074
QM010	6067
QM020	6067
QM120	6069
QM122	6069
QM600	6068
QT010	6067
QT01201	6066
QT012STSTH	6066
QT020	6067
RB1-AG	8086
RB4	8086
RB4-AG	8086
RB5	8086
RB5-AG	8086
RM010	6065
RM015	6065
RM020	6065
RM030	6066
RM0450	6066
RM0452	6066
RM0500	6066
RM0502	6066
RM0532	6066
RM0552	6066
RM0652	6066
RM120	6068
RM122	6068
RM130	6068
RM145	6068
RM150	6068
RM200	6067
RM201	6067
RM204	6067
RM205	6067
RM210	6068
RM220	6068
RM222	6068
RM230	6068
RM232	6068
RM233	6068
RM240	6068
RM243	6068
RM250	6067
RM270	6068
RM272	6068, 6071
RM273	6068
RM280	6068
RM600	6068
RM650	6068
RM653	6068
RM1652	6068
RM3040	6067
RM3100	6067
RM3120	6067
RM3130	6067
RM3700	6067
RM3800	6067
RM3830	6067
RM4040	6067
RM4100	6067
RM4120	6067
RM4130	6067
RM4700	6067
RM4800	6067
RSB3	8050
RSB3VP0212	8075
RSB3VP0312	8075
RSB3VP0412	8075
RSB3VP0512	8075
RSB3VP0612	8075
RSB3VP0712	8075
RSB3VP0812	8075
RSB3VP0912	8075
RSB3VP1012	8075
RSB3VP1112	8075
RSB3VP1212	8075
RSB3VP1312	8075
RSB3VP1412	8075
RSB6	8050, 8074
RSB6B	8051
RSB6B02S	8076
RSB6B03S	8076
RSB6B04S	8076
RSB6B05S	8076
RSB6B06S	8076
RSB6B07S	8076
RSB6B08S	8076
RSB6B09S	8076
RSB6B10S	8076
RT010	6065
RT020	6065
RT0500	6066
RT0502	6066
RT120	6069
SDRO	6059
SE1DGPC	6013
SE1DRGA	6013
SE1EGPC	6013
SE1EGRA	6013
SE2DGPC	6013
SE2DRGA	6013
SE2EGPC	6013
SE2EGRA	6013
SL220	6027
SL330	6027
SL550	6027
SL660	6027
SL770	6027
SL880	6027
SL1000	6027
SLS120	6026
SLS121	6029
SLS121PC	6029
SLS121RA	6029
SLS131PC	6030
SLS131RA	6030
SLS141PC	6030
SLS141RA	6030
SLS151PC	6030
SLS151RA	6030
SLS220	6026
SLS220PC	6027
SLS230PC	6027
SLS240PCA	6027
SLS250PC	6027
SLS260PC	6027
SLS1201	6028
SLS1211	6029
SLS2201	6028
SLSA120	6026
SLSA220	6026
SLSA1201	6028
SLSA2201	6028
SM2V02	8047
SM-3	13020
SMC2402	8047
SP867	9112
SR601	6068
SSA12	6025
SSA12G	6025
SSA22	6025
SSA22G	6025
SSB	8073, 8074
SSB3	8051
SSB3FP0202	8075
SSB3FP0302	8075
SSB3FP0402	8075
SSB3FP0502	8075
SSB3FP0602	8075
SSB3FP0702	8075
SSB3FP0802	8075
SSB3FP080202	8075
SSB3FP0902	8075
SSB3FP1002	8075
SSB3FP1102	8075
SSB3FP1202	8075
SSB3FP1302	8075
SSB3FP1402	8075
SSB6	8051, 8074
SSB7	8051, 8074
SSB7FP	8070
SSB7FP06020211	8071
SSB7R	8072
SSB12	6024
SSB12G	6024
SSB12R	6024
SSB12RG	6024
SSB22	6024
SSB22G	6024
SSB22R	6024
SSB22RG	6024
SSB42	6024
SSB42G	6024
SSJ12	6022
SSJ12R	6022
SSJ13	6022
ST80	8074
ST81	8074
STS121PC	6014
STS121RA	6014
STS131PC	6014
STS131RA	6014
STS141PC	6015
STS141RA	6015
STS151PC	6016
STS151RA	6016
STS161PC	6016
STS161RA	6016
STS220PC	6017
STS230PC	6017
STS240PC	6017
STS250PC	6017
STS260PC	6017
STS1300PC	6015
STS1300RA	6015
STS1400PC	6015
STS1400RA	6015
STS2300PC	6016
STS2400PC	6016
STSA220RA	6017
STSA220RA1	6017
STSA230RA	6017
STSA230RA1	6017
T114-1	5016
TB1	8086
TC4	8077
TC4-06-PFH-CL	8077
TC6	8077
TC8	8077
TI8136-8	5016
TI8136-14/16	5016
TI8136-18/20	5016
TI8136-22	5016
TI8136-24/28	5016
TI8136-32/40	5016
TK2	8085
TK2-48-AG	8085
TK2D	8085
TK8136-1G1	5016
TKAD	8085
TP1L	6064
TP1LA2FA8	6063
TP1LA4FA8	6063
TP1LA5FA8	6063
TP1LC2FC8	6063
TP1M	6064
TP1MA2FA8	6063
TP1MC2FC8	6063
TP1MC4FC8	6063
TP1MC5FC8	6063
TP2L	6064
TP2L2AL2FA8	6063
TP2L2CL2FC8	6063
TP2L4AL4FA8	6063
TP2L4CL4FC8	6063
TP2L5AL5FA8	6063
TP2L5CL5FC8	6063
TP2M	6064
TP2M2AL2FA8	6063
TP2M2CL2FC8	6063
TP2M4AL4FA8	6063
TP2M4CL4FC8	6063
TP2M5AL5FA8	6063
TP2M5CL5FC8	6063
TP11CGPC	6051
TP11CGRA	6051
TP11FGPC	6051
TP11FGRA	6051
TP21CCGPC	6051
TP21CCGRA	6052
TP21FFGRA	6052
TPA11CGPC	6051
TPA11CGRA	6051
TPA11FGPC	6051
TPA11FGRA	6051
TPA21CCGPC	6051
TPA21CCGRA	6052
TPA21FFGPC	6051
TPA21FFGRA	6052
TPA21MGRA	6052
TPB11CGPC	6052
TPB11CGRA	6053
TPB11CGVRA	6049
TPB11FGPC	6052
TPB11FGRA	6053
TPB11FGVRA	6049
TPB21MGPC	6053
TPB21MGRA	6053
TPB21RGPC	6053
TPB21RGRA	6053
TPBF11CGPC	6050
TPBF11CGRA	6050
TPBF11FGPC	6050
TPBF11FGRA	6050
TPC11CGPC	6052
TPC11CGRA	6053
TPC11CGVRA	6049
TPC11FGPC	6052
TPC11FGRA	6053
TPC11FGVRA	6049
TPC13C	6049
TPC13F	6049
TPC21MGPC	6053
TPC21MGRA	6053
TPC21RGPC	6053
TPC21RGRA	6053
TPC23M	6049
TPC23R	6049
TPCF11CGPC	6050
TPCF11CGRA	6050
TPCF11FGPC	6050
TPCF11FGRA	6050
TPCF13C	6050
TPCF13F	6050
TPD11CGPC	6054
TPD11CGRA	6055
TPD11FGPC	6054
TPD11FGRA	6055
TPD21MFRA	6055
TPD21MGPC	6054
TPD21MGRA	6055
TPD21RGPC	6054
TPD21RGRA	6055
TPF11CGPC	6054
TPF11CGRA	6055
TPF11FGPC	6054
TPF11FGRA	6055
TPF13C	6049
TPF13F	6049
TPF21MGPC	6054
TPF21MGRA	6055
TPF21RGPC	6054
TPF21RGRA	6055
TPF23M	6049
TPF23R	6049
TR-1	8086
TS11DG1PC	6018
TSB230	8088
TSB230 01DS	8090
TSB230 01DS HT	8091
TSB230 02DS	8090
TSB230 02DS HT	8091
TSB230 03DS	8090
TSB230 03DS HT	8091
TSB230 04DS	8090
TSB230 04DS HT	8091
TSB230 05DS	8090
TSB230 05DS HT	8091
TSB230 06DS	8090
TSB230 06DS HT	8091
TSB230 07DS	8090
TSB230 07DS HT	8091
TSB230 08DS	8090
TSB230 08DS HT	8091
TSB230 09DS	8090
TSB230 09DS HT	8091
TSB230 10DS	8090
TSB230 10DS HT	8091
TSB230 11DS	8090
TSB230 11DS HT	8091
TSB230 12DS	8090

Products for Industrial & Commercial Applications

Dimensions are shown for reference purposes only.

Dimensions are in inches and millimeters unless otherwise specified. Values in brackets are metric equivalents.

Specifications subject to change.

Technical Support Center
1-800-522-6752
www.tycoelectronics.com

Part Number	Page Number
TSB230 12DS HT	8091
TSB500	8088, 8095, 8100
TSB500 0131DS	8092
TSB500 0131DS HT	8093
TSB500 0231DS	8092
TSB500 0231DS HT	8093
TSB500 0331DS	8092
TSB500 0331DS HT	8093
TSB500 0431DS	8092
TSB500 0431DS HT	8093
TSB500 0531DS	8092
TSB500 0531DS HT	8093
TSB500 0631DS	8092
TSB500 0631DS HT	8093
TSB500 0731DS	8092
TSB500 0731DS HT	8093
TSB500 0831DS	8092
TSB500 0831DS HT	8093
TSB500 0931DS	8092
TSB500 0931DS HT	8093
TSB500 1031DS	8092
TSB500 1031DS HT	8093
TSB500 1131DS	8092
TSB500 1131DS HT	8093
TSB500 1231DS	8092
TSB500 1231DS HT	8093
TSB500SK	8088
TSB500 SK01	8094
TSB500 SK01MDS	8094
TSB500 SK02	8094
TSB500 SK02MDS	8094
TSB500 SK03	8094
TSB500 SK03MDS	8094
TSB500 SK04	8094
TSB500 SK04MDS	8094
TSB500 SK05	8094
TSB500 SK05MDS	8094
TSB500 SK06	8094
TSB500 SK06MDS	8094
TSB500 SK07	8094
TSB500 SK07MDS	8094
TSB500 SK08	8094
TSB500 SK08MDS	8094
TSB500 SK09	8094
TSB500 SK09MDS	8094
TSB500 SK10	8094
TSB500 SK10MDS	8094
TSB500 SK11	8094
TSB500 SK11MDS	8094
TSB500 SK12	8094
TSB500 SK12MDS	8094
TSB1000	8089, 8099, 8100
TSB1000 01DS	8096
TSB1000 01DS HT	8097
TSB1000 01DSUS	8098
TSB1000 01US	8098
TSB1000 02DS	8096
TSB1000 02DS HT	8097
TSB1000 02DSUS	8098
TSB1000 02US	8098
TSB1000 03DS	8096
TSB1000 03DS HT	8097
TSB1000 03DSUS	8098
TSB1000 03US	8098
TSB1000 04DS	8096
TSB1000 04DS HT	8097
TSB1000 04DSUS	8098
TSB1000 04US	8098
TSB1000 05DS	8096
TSB1000 05DS HT	8097
TSB1000 05DSUS	8098
TSB1000 05US	8098
TSB1000 06DS	8096
TSB1000 06DS HT	8097
TSB1000 06DSUS	8098
TSB1000 06US	8098
TSB1000 07DS	8096
TSB1000 07DS HT	8097
TSB1000 07DSUS	8098
TSB1000 07US	8098
TSB1000 08DS	8096
TSB1000 08DS HT	8097
TSB1000 08DSUS	8098
TSB1000 08US	8098
TSB1000 09DS	8096
TSB1000 09DS HT	8097
TSB1000 09DSUS	8098
TSB1000 09US	8098
TSB1000 10DS	8096
TSB1000 10DS HT	8097
TSB1000 10DSUS	8098
TSB1000 10US	8098
TSB1000 11DS	8096
TSB1000 11DS HT	8097
TSB1000 11DSUS	8098
TSB1000 11US	8098
TSB1000 12DS	8096
TSB1000 12DS HT	8097
TSB1000 12DSUS	8098
TSB1000 12US	8098
TSB1500	8089
TSB2000	8089
TSD21AAGPC	6018
TSD21DDG1PC	6018
TSD21DDG1RA	6019
TSD21DDGPC	6018
TSD21DDGRA	6019
TSD21EEG1RA	6019
TSD21EEGRA	6019
TSS11AG1PC	6018
TSS11AGPC	6018
TSS11DG1PC	6018
TSS11DG1RA	6019
TSS11DGPC	6018
TSS11DGRA	6019
TSS11EG1PC	6018
TSS11EG1RA	6019
TSS11EGPC	6018
TSS11EGRA	6019
TSS21KG1PC	6018
TSS21KGPC	6018
TSS21NG1PC	6018
TSS21NG1RA	6019
TSS21NGPC	6018
TSS21NGRA	6019
TSS21PAGRA	6019
TSS21PG1RA	6019
TSS21PGPC	6018
TSS21PGRA	6019
TSS21RG1PC	6018
TSS41NGPC	6018
TSS41NGRA	6019
TT11AGPC1	6031
TT11AGPC9T1/4	6032
TT11DGPC1	6031
TT11DGPC9T1/4	6032
TT11DGRA7T1/4	6033
TT11DGVRA1	6032
TT11DGVRA3T	6032
TT11EGPC1	6031
TT11EGPC9T1/4	6032
TT11EGRA7T1/4	6033
TT11EGVRA1	6032
TT11EGVRA3T	6032
TT11FGPC9T1/4	6032
TT11FGRA7T1/4	6033
TT13A2T	6034
TT13A3T	6035
TT13A9T1/4	6035
TT13D2T	6034
TT13D3T	6035
TT13D7T1/4	6034
TT13D9T1/4	6035
TT13E2T	6034
TT13E3T	6035
TT13E7T1/4	6034
TT13E9T1/4	6035
TT21KGPC1	6031
TT21KGPC9T1/4	6032
TT21NGPC1	6031
TT21NGPC9T1/4	6032
TT21NGRA7T1/4	6033
TT21NGVRA1	6032
TT21NGVRA3T	6032
TT21PAGPC1	6031
TT21PAGPC9T1/4	6032
TT21PAGRA7T1/4	6033
TT21PGPC1	6031
TT21PGPC9T1/4	6032
TT21PGRA7T1/4	6033
TT21PGVRA1	6032
TT21RGPC9T1/4	6032
TT23K2T	6034
TT23K3T	6035
TT23K9T1/4	6035
TT23N2T	6034
TT23N3T	6035
TT23N7T1/4	6034
TT23N9T1/4	6035
TT23P2T	6034
TT23P3T	6035
TT23P7T1/4	6034
TT23P9T1/4	6035
TT23PA3T	6035
TT23PA9T1/4	6035
TT41NGPC1	6031
TT41NGPC9T1/4	6032
TT41NGRA7T1/4	6033
TT41PGPC9T1/4	6032
TT43N2T	6034
TT43N3T	6035
TT43N7T1/4	6034
TT43N9T1/4	6035
TT43P3T	6035
TT43P7T1/4	6034
TT43P9T1/4	6035
TW8136-14/20	5016
TW8136-8	5016
TW8136-22	5016
TW8136-24/28	5016
TW8136-32/40	5016
TX8136-14/20	5017
TX8136-20/84 PCS	5034, 5036
TX8136-22	5017
TX8136-24	5017
TX8136-40	5017
TX8136-64	5017
USB	8051
USB3B02S	8075
USB3B03S	8075
USB3B04S	8075
USB3B05S	8075
USB3B06S	8075
USB3B07S	8075
USB3B08S	8075
USB3B08S	8075
USB3B09S	8075
USB3B10S	8075
USB3B11S	8075
USB3B12S	8075
USB3B13S	8075
USB3B14S	8075
V40	6070, 6071
V50	6070, 6071
V50D	6070
VA0	6070, 6071
VR0	6070, 6071

Products for Industrial & Commercial Applications

Dimensions are shown for reference purposes only.

Dimensions are in inches and millimeters unless otherwise specified. Values in brackets are metric equivalents.

Specifications subject to change.

Technical Support Center
1-800-522-6752
www.tycoelectronics.com

The Acquired Products Part Number Cross Reference provides a cross reference between Thomas & Betts part numbers identifying ALCOSWITCH, ANSLEY, AUGAT, and BUCHANAN products acquired from Thomas & Betts Corporation, and Tyco Electronics part numbers.

Acquired Part Number	Tyco Part Number	Page Number
0125-22	1437392-2	8103
0125-64	1437392-3	8103
0125-64-1	1437392-4	8103
0524PS	1-1437391-7	8117
0724PS	2-1437391-3	8108
011503-1	1437394-1	8103
012512-1	1437392-8	8103
012516-1	1-1437392-0	8103
012540-1	1-1437392-1	8103
021309-1	1437390-6	8122
051120-1	1437391-3	8116
072506-1	2-1437393-1	8111
2SV-02	1437671-1	8048
2SV-03	1437671-4	8048
2SV-04	1437671-6	8048
2SV-05	1437671-7	8048
2SV-06	1437671-9	8048
2SV-07	1-1437671-0	8048
2SV-08	1-1437671-1	8048
2SV-09	1-1437671-2	8048
2SV-10	1-1437671-3	8048
2SV-11	1-1437671-4	8048
2SV-12	1-1437671-5	8048
2SV-13	1-1437671-6	8048
2SV-14	1-1437671-9	8048
2SV-15	2-1437671-0	8048
2SV-16	2-1437671-1	8048
2TK-6	1437685-2	8085
2TK-48	1437685-1	8085
2TK2-2	1437685-8	8085
2TK2-3	1-1437685-0	8085
2TK2-6	1-1437685-4	8085
2TK2-10	1437685-3	8085
2TK2-12	1437685-6	8085
2TK2-15	1437685-7	8085
2TK2-24	1437685-9	8085
2TK2-48	1-1437685-3	8085
2TK2D-4	1-1437685-8	8085
2TK2D-6	2-1437685-0	8085
2TK2D-12	1-1437685-6	8085
2TK2D-24	1-1437685-7	8085
2TK2D-48	1-1437685-9	8085
2TKD-6	1437814-2	8085
2TKD-12	1437814-1	8085
3PCR-02	1437646-1	8050, 8053, 8054, 8055
3PCR-02-004	1437646-2	8050, 8053, 8054, 8055
3PCR-03	1437646-3	8050, 8053, 8054, 8055
3PCR-03-004	1437646-4	8050, 8053, 8054, 8055
3PCR-04	1437646-5	8050, 8053, 8054, 8055
3PCR-04-004	1437646-6	8050, 8053, 8054, 8055
3PCR-05	1437646-7	8050, 8053, 8054, 8055
3PCR-05-004	1437646-8	8050, 8053, 8054, 8055
3PCR-05-006	1437646-9	8050, 8053, 8054, 8055
3PCR-06	1-1437646-0	8050, 8053, 8054, 8055
3PCR-06-001	7-1437647-8	8050, 8053, 8054, 8055
3PCR-06-004	1-1437646-1	8050, 8053, 8054, 8055
3PCR-06-006	1-1437646-2	8050, 8053, 8054, 8055
3PCR-06-276	1-1437646-3	8050, 8053, 8054, 8055
3PCR-07	1-1437646-4	8050, 8053, 8054, 8055
3PCR-07-004	1-1437646-5	8050, 8053, 8054, 8055
3PCR-08	1-1437646-6	8050, 8053, 8054, 8055
3PCR-09	1-1437646-7	8050, 8053, 8054, 8055
3PCR-09	1-1437646-9	8050, 8053, 8054, 8055
3PCR-09-004	1-1437646-8	8050, 8053, 8054, 8055
3PCR-10	2-1437646-0	8050, 8053, 8054, 8055
3PCR-11	2-1437646-1	8050, 8053, 8054, 8055
3PCR-12	2-1437646-2	8050, 8053, 8054, 8055
3PCR-12-004	2-1437646-3	8050, 8053, 8054, 8055
3PCR-16	2-1437646-4	8050, 8053, 8054, 8055
3PCR-18	2-1437646-5	8050, 8053, 8054, 8055
3PCR-19	2-1437646-6	8050, 8053, 8054, 8055
3PCR-20	2-1437646-7	8050, 8053, 8054, 8055
3PCR-23	2-1437646-8	8050, 8053, 8054, 8055
3PCR-30	2-1437646-9	8050, 8053, 8054, 8055
3PCR-30-004	3-1437646-0	8050, 8053, 8054, 8055
3PCV-02	3-1437646-1	8050, 8053, 8054, 8055
3PCV-02-004	3-1437646-2	8050, 8053, 8054, 8055
3PCV-02-006	3-1437646-3	8050, 8053, 8054, 8055
3PCV-02-008	3-1437646-4	8050, 8053, 8054, 8055
3PCV-03	3-1437646-7	8050, 8053, 8054, 8055
3PCV-03-004	3-1437646-8	8050, 8053, 8054, 8055
3PCV-03-006	3-1437646-9	8050, 8053, 8054, 8055
3PCV-04	4-1437646-0	8050, 8053, 8054, 8055
3PCV-04-004	4-1437646-1	8050, 8053, 8054, 8055
3PCV-04-006	4-1437646-2	8050, 8053, 8054, 8055
3PCV-05	4-1437646-3	8050, 8053, 8054, 8055
3PCV-05-004	4-1437646-4	8050, 8053, 8054, 8055
3PCV-05-006	4-1437646-5	8050, 8053, 8054, 8055
3PCV-06	4-1437646-8	8050, 8053, 8054, 8055
3PCV-06-004	4-1437646-9	8050, 8053, 8054, 8055
3PCV-06-006	5-1437646-0	8050, 8053, 8054, 8055
3PCV-06-008	7-1437647-7	8050, 8053, 8054, 8055
3PCV-07	5-1437646-2	8050, 8053, 8054, 8055
3PCV-07-004	5-1437646-3	8050, 8053, 8054, 8055
3PCV-07-006	5-1437646-4	8050, 8053, 8054, 8055
3PCV-08	5-1437646-5	8050, 8053, 8054, 8055
3PCV-08-004	5-1437646-6	8050, 8053, 8054, 8055
3PCV-08-006	5-1437646-7	8050, 8053, 8054, 8055
3PCV-09	5-1437646-8	8050, 8053, 8054, 8055
3PCV-09-006	5-1437646-9	8050, 8053, 8054, 8055
3PCV-10	6-1437646-0	8050, 8053, 8054, 8055
3PCV-10-004	6-1437646-1	8050, 8053, 8054, 8055
3PCV-10-006	6-1437646-2	8050, 8053, 8054, 8055
3PCV-11	6-1437646-3	8050, 8053, 8054, 8055
3PCV-11-004	6-1437646-4	8050, 8053, 8054, 8055
3PCV-12	6-1437646-5	8050, 8053, 8054, 8055
3PCV-12-004	6-1437646-6	8050, 8053, 8054, 8055
3PCV-12-006	6-1437646-7	8050, 8053, 8054, 8055
3PCV-13	6-1437646-9	8050, 8053, 8054, 8055
3PCV-13-004	7-1437646-0	8050, 8053, 8054, 8055
3PCV-14	7-1437646-1	8050, 8053, 8054, 8055
3PCV-14-004	7-1437646-2	8050, 8053, 8054, 8055
3PCV-14-006	7-1437646-3	8050, 8053, 8054, 8055
3PCV-15	7-1437646-4	8050, 8053, 8054, 8055
3PCV-15-006	7-1437646-5	8050, 8053, 8054, 8055
3PCV-16	7-1437646-6	8050, 8053, 8054, 8055
3PCV-16-004	7-1437646-7	8050, 8053, 8054, 8055
3PCV-16-006	7-1437646-8	8050, 8053, 8054, 8055
3PCV-17	8-1437646-1	8050, 8053, 8054, 8055
3PCV-18	8-1437646-2	8050, 8053, 8054, 8055
3PCV-20	8-1437646-3	8050, 8053, 8054, 8055
3PCV-20-004	8-1437646-4	8050, 8053, 8054, 8055
3PCV-21	8-1437646-5	8050, 8053, 8054, 8055
3PCV-21-004	8-1437646-6	8050, 8053, 8054, 8055
3PCV-22	8-1437646-7	8050, 8053, 8054, 8055
3PCV-22-004	8-1437646-8	8050, 8053, 8054, 8055
3PCV-23	8-1437646-9	8050, 8053, 8054, 8055
3PCV-24	9-1437646-0	8050, 8053, 8054, 8055
3PCV-26	9-1437646-1	8050, 8053, 8054, 8055
3PCV-27	9-1437646-2	8050, 8053, 8054, 8055
3PCV-28	9-1437646-3	8050, 8053, 8054, 8055
3PCV-29	9-1437646-4	8050, 8053, 8054, 8055
3PCV-30	9-1437646-5	8050, 8053, 8054, 8055
3PCV-31	9-1437646-6	8050, 8053, 8054, 8055
3PCV-32	9-1437646-7	8050, 8053, 8054, 8055
3STR-02-004	9-1437646-8	8050, 8053, 8054, 8055
3STR-03	9-1437646-9	8050, 8053, 8054, 8055
3STR-04	1437647-1	8050, 8053, 8054, 8055
3STR-04-004	1437647-2	8050, 8053, 8054, 8055
3STR-05	1437647-3	8050, 8053, 8054, 8055
3STR-05-004	1437647-4	8050, 8053, 8054, 8055
3STR-06	1437647-5	8050, 8053, 8054, 8055
3STR-07-004	1437647-6	8050, 8053, 8054, 8055
3STR-08	1437647-7	8050, 8053, 8054, 8055
3STR-09	1437647-8	8050, 8053, 8054, 8055
3STR-10	1437647-9	8050, 8053, 8054, 8055
3STR-10-004	1-1437647-0	8050, 8053, 8054, 8055
3STR-10-005	7-1437647-6	8050, 8053, 8054, 8055
3STR-12	1-1437647-1	8050, 8053, 8054, 8055
3STR-14	1-1437647-2	8050, 8053, 8054, 8055
3STR-15	1-1437647-4	8050, 8053, 8054, 8055
3STR-17	1-1437647-5	8050, 8053, 8054, 8055
3STR-28	1-1437647-6	8050, 8053, 8054, 8055
3STV-02	1-1437647-7	8050, 8053, 8054, 8055
3STV-03	1-1437647-8	8050, 8053, 8054, 8055
3STV-04	1-1437647-9	8050, 8053, 8054, 8055
3STV-04-004	2-1437647-0	8050, 8053, 8054, 8055
3STV-05	2-1437647-1	8050, 8053, 8054, 8055
3STV-05-001	2-1437647-2	8050, 8053, 8054, 8055
3STV-06	2-1437647-3	8050, 8053, 8054, 8055
3STV-07	2-1437647-4	8050, 8053, 8054, 8055
3STV-08	2-1437647-5	8050, 8053, 8054, 8055
3STV-09	2-1437647-6	8050, 8053, 8054, 8055
3STV-10	2-1437647-7	8050, 8053, 8054, 8055
3STV-11	2-1437647-8	8050, 8053, 8054, 8055
3STV-12	2-1437647-9	8050, 8053, 8054, 8055
3STV-15	3-1437647-0	8050, 8053, 8054, 8055
3STV-16	3-1437647-1	8050, 8053, 8054, 8055
3STV-20	3-1437647-2	8050, 8053, 8054, 8055
3TK2-4	2-1437685-9	8085
3TK2-5	3-1437685-3	8085
3TK2-6	3-1437685-4	8085
3TK2-11	2-1437685-2	8085
3TK2-12	2-1437685-3	8085
3TK2-24	2-1437685-6	8085
3TK2-48	3-1437685-1	8085
3TK2D-6	3-1437685-8	8085
3TK2D-12	3-1437685-5	8085
3TK2D-24	3-1437685-6	8085
3TK2D-48	3-1437685-7	8085
4DB-P104-02	1437667-1	8051, 8066, 8067
4DB-P104-04	1437667-2	8051, 8066, 8067
4DB-P104-06	1437667-3	8051, 8066, 8067
4DB-P104-08	1437667-4	8051, 8066, 8067
4DB-P104-10	1437667-5	8051, 8066, 8067
4DB-P107-02	1437667-6	8051, 8066, 8067
4DB-P107-03	1437667-7	8051, 8066, 8067
4DB-P107-04	1-1437667-0	8051, 8066, 8067
4DB-P107-05	1-1437667-1	8051, 8066, 8067
4DB-P107-06	1-1437667-2	8051, 8066, 8067
4DB-P107-07	1-1437667-4	8051, 8066, 8067
4DB-P107-08	1-1437667-5	8051, 8066, 8067
4DB-P107-09	1-1437667-6	8051, 8066, 8067
4DB-P107-10	1-1437667-7	8051, 8066, 8067
4DB-P107-11	1-1437667-8	8051, 8066, 8067
4DB-P107-12	1-1437667-9	8051, 8066, 8067
4DB-P107-15	2-1437667-0	8051, 8066, 8067
4DB-P107-16	2-1437667-1	8051, 8066, 8067
4DB-P107-25	2-1437667-2	8051, 8066, 8067
4DB-P107-26	2-1437667-3	8051, 8066, 8067
4DB-P108-02	2-1437667-4	8051, 8066, 8067
4DB-P108-03	2-1437667-5	8051, 8066, 8067
4DB-P108-04	2-1437667-6	8051, 8066, 8067
4DB-P108-05	2-1437667-8	8051, 8066, 8067
4DB-P108-06	2-1437667-9	8051, 8066, 8067
4DB-P108-07	3-1437667-0	8051, 8066, 8067
4DB-P108-08	3-1437667-1	8051, 8066, 8067
4DB-P108-09	3-1437667-2	8051, 8066, 8067
4DB-P108-10	3-1437667-3	8051, 8066, 8067
4DB-P108-11	3-1437667-5	8051, 8066, 8067
4DB-P108-12	3-1437667-6	8051, 8066, 8067
4DB-P108-13	3-1437667-7	8051, 8066, 8067
4DB-P108-14	3-1437667-8	8051, 8066, 8067
4DB-P108-15	3-1437667-9	8051, 8066, 8067
4DB-P108-16	4-1437667-0	8051, 8066, 8067
4DB-P108-17	4-1437667-2	8051, 8066, 8067
4DB-P108-18	4-1437667-4	8051, 8066, 8067
4DB-P108-19	4-1437667-5	8051, 8066, 8067
4DB-P108-20	4-1437667-6	8051, 8066, 8067
4DB-P108-21	796658-2	8051, 8066, 8067
4DB-P108-22	4-1437667-8	8051, 8066, 8067
4DB-P108-24	5-1437667-0	8051, 8066, 8067
4DB-P108-26	5-1437667-2	8051, 8066, 8067
4DB-P108-28	5-1437667-3	8051, 8066, 8067
4DB-P108-30	5-1437667-5	8051, 8066, 8067
4DB-P207-03	5-1437667-6	8051, 8066, 8067
4DB-P207-04	5-1437667-7	8051, 8066, 8067
4DB-P207-05	5-1437667-8	8051, 8066, 8067
4DB-P207-06	5-1437667-9	8051, 8066, 8067
4DB-P208-02	6-1437667-0	8051, 8066, 8067
4DB-P208-04	6-1437667-1	8051, 8066, 8067
4DB-P208-22	6-1437667-2	8051, 8066, 8067
4DB-R104-03	1437668-6	8051, 8066, 8067
4DB-R107-02	6-1437667-3	8051, 8066, 8067

Products for Industrial & Commercial Applications

Dimensions are shown for reference purposes only.

Dimensions are in inches and millimeters unless otherwise specified. Values in brackets are metric equivalents.

Specifications subject to change.

Technical Support Center
1-800-522-6752
www.tycoelectronics.com

Acquired Part Number	Tyco Part Number	Page Number
4DB-R107-03	6-1437667-4	8051, 8066, 8067
4DB-R107-04	6-1437667-5	8051, 8066, 8067
4DB-R107-06	6-1437667-6	8051, 8066, 8067
4DB-R107-07	6-1437667-7	8051, 8066, 8067
4DB-R107-08	6-1437667-8	8051, 8066, 8067
4DB-R107-11	7-1437667-0	8051, 8066, 8067
4DB-R108-02	7-1437667-1	8051, 8066, 8067
4DB-R108-03	7-1437667-2	8051, 8066, 8067
4DB-R108-03	7-1437667-2	8051, 8066, 8067
4DB-R108-04	7-1437667-3	8051, 8066, 8067
4DB-R108-05	7-1437667-4	8051, 8066, 8067
4DB-R108-06	7-1437667-5	8051, 8066, 8067
4DB-R108-15	7-1437667-7	8051, 8066, 8067
4DB-R108-20	7-1437667-8	8051, 8066, 8067
4DB-R108-23	1437668-7	8051, 8066, 8067
4DB-R207-02	7-1437667-9	8051, 8066, 8067
4DB-R207-05	8-1437667-0	8051, 8066, 8067
4DB-R208-06	8-1437667-1	8051, 8066, 8067
4DB-S208-02	8-1437667-3	8051, 8066, 8067
4DB-S208-06	8-1437667-4	8051, 8066, 8067
4DB-S208-12	8-1437667-5	8051, 8066, 8067
4DB-W108-06	8-1437667-6	8051, 8066, 8067
4DB-W108-12	8-1437667-7	8051, 8066, 8067
4DB-W108-18	8-1437667-8	8051, 8066, 8067
4DB-W108-20	8-1437667-9	8051, 8066, 8067
4DB-W207-02	9-1437667-0	8051, 8066, 8067
4DB-W207-03	9-1437667-1	8051, 8066, 8067
4DB-W207-04	9-1437667-2	8051, 8066, 8067
4DB-W208-02	9-1437667-3	8051, 8066, 8067
4DB-W208-03	9-1437667-4	8051, 8066, 8067
4DB-W208-04	9-1437667-5	8051, 8066, 8067
4DB-W208-08	9-1437667-6	8051, 8066, 8067
4DB-W208-09	9-1437667-7	8051, 8066, 8067
4DB-W208-14	9-1437667-8	8051, 8066, 8067
4TK2-6	4-1437685-3	8085
4TK2-7	4-1437685-4	8085
4TK2-12	4-1437685-0	8085
4TK2-24	4-1437685-1	8085
4TK2-48	4-1437685-2	8085
6TK2-2	4-1437685-8	8085
6TK2-4	4-1437685-9	8085
6TK2-5	5-1437685-2	8085
6TK2-6	5-1437685-5	8085
6TK2-12	4-1437685-6	8085
6TK2-14	4-1437685-7	8085
6TK2-48	5-1437685-0	8085
6TK2D-6	5-1437685-8	8085
6TK2D-12	5-1437685-6	8085
6TK2D-48	5-1437685-7	8085
7C1F13	3-1437418-7	8074
7C1F16	3-1437418-8	8074
7C1N02	3-1437418-9	8074
7C1N03	4-1437418-0	8074
7C1N04	4-1437418-1	8074
7C1N05	4-1437418-2	8074
7C1N06	4-1437418-3	8074
7C1N07	4-1437418-4	8074
7C1N08	4-1437418-5	8074
7C1N09	4-1437418-6	8074
7C1N10	4-1437418-7	8074
7C1N12	4-1437418-8	8074
7C1N13	1437412-5	8074
7C1N16	4-1437418-9	8074
7C1N19	5-1437418-0	8074
7C1N25	1437412-6	8074
7C1N48	5-1437418-1	8074
8DBL-02	1437657-7	8050, 8063, 8064, 8065
8DBL-02-006	1437657-8	8050, 8063, 8064, 8065
8DBL-02-007	1437657-9	8050, 8063, 8064, 8065
8DBL-03	1-1437657-0	8050, 8063, 8064, 8065
8DBL-03-006	1-1437657-1	8050, 8063, 8064, 8065
8DBL-04	1-1437657-2	8050, 8063, 8064, 8065
8DBL-04-006	1-1437657-3	8050, 8063, 8064, 8065
8DBL-04-007	1-1437657-4	8050, 8063, 8064, 8065
8DBL-05	1-1437657-5	8050, 8063, 8064, 8065
8DBL-05-007	796709-1	8050, 8063, 8064, 8065
8DBL-06	1-1437657-6	8050, 8063, 8064, 8065
8DBL-06-006	1-1437657-7	8050, 8063, 8064, 8065
8DBL-06-007	1-1437657-8	8050, 8063, 8064, 8065
8DBL-07	1-1437657-9	8050, 8063, 8064, 8065
8PCR-02	2-1437657-0	8050, 8063, 8064, 8065
8PCR-02-001	2-1437657-1	8050, 8063, 8064, 8065
8PCR-02-006	2-1437657-2	8050, 8063, 8064, 8065
8PCR-03	2-1437657-5	8050, 8063, 8064, 8065
8PCR-03-001	2-1437657-6	8050, 8063, 8064, 8065
8PCR-03-005	2-1437657-7	8050, 8063, 8064, 8065
8PCR-03-006	2-1437657-8	8050, 8063, 8064, 8065
8PCR-04	2-1437657-9	8050, 8063, 8064, 8065
8PCR-04-001	3-1437657-0	8050, 8063, 8064, 8065
8PCR-04-006	3-1437657-1	8050, 8063, 8064, 8065
8PCR-04-008	3-1437657-2	8050, 8063, 8064, 8065
8PCR-05	3-1437657-3	8050, 8063, 8064, 8065
8PCR-05-007	3-1437657-4	8050, 8063, 8064, 8065
8PCR-06	3-1437657-5	8050, 8063, 8064, 8065
8PCR-06-001	3-1437657-6	8050, 8063, 8064, 8065
8PCR-06-006	3-1437657-7	8050, 8063, 8064, 8065
8PCR-06-007	3-1437657-8	8050, 8063, 8064, 8065
8PCR-06-008	3-1437657-9	8050, 8063, 8064, 8065
8PCR-07	4-1437657-0	8050, 8063, 8064, 8065
8PCR-08	4-1437657-2	8050, 8063, 8064, 8065
8PCR-08-006	4-1437657-3	8050, 8063, 8064, 8065
8PCR-08-007	4-1437657-4	8050, 8063, 8064, 8065
8PCR-10	4-1437657-5	8050, 8063, 8064, 8065
8PCR-10-001	4-1437657-6	8050, 8063, 8064, 8065
8PCR-11-007	4-1437657-7	8050, 8063, 8064, 8065
8PCR-12	4-1437657-8	8050, 8063, 8064, 8065
8PCR-12-001	4-1437657-9	8050, 8063, 8064, 8065
8PCR-12-007	5-1437657-0	8050, 8063, 8064, 8065
8PCR-18	5-1437657-1	8050, 8063, 8064, 8065
8PCV-02	5-1437657-2	8050, 8063, 8064, 8065
8PCV-02-001	5-1437657-3	8050, 8063, 8064, 8065
8PCV-02-004	5-1437657-4	8050, 8063, 8064, 8065
8PCV-02-005	5-1437657-5	8050, 8063, 8064, 8065
8PCV-02-006	5-1437657-7	8050, 8063, 8064, 8065
8PCV-03	6-1437657-5	8050, 8063, 8064, 8065
8PCV-03-001	6-1437657-6	8050, 8063, 8064, 8065
8PCV-03-004	6-1437657-7	8050, 8063, 8064, 8065
8PCV-03-005	6-1437657-8	8050, 8063, 8064, 8065
8PCV-03-006	6-1437657-9	8050, 8063, 8064, 8065
8PCV-03-007	7-1437657-0	8050, 8063, 8064, 8065
8PCV-03-008	7-1437657-1	8050, 8063, 8064, 8065
8PCV-04	7-1437657-6	8050, 8063, 8064, 8065
8PCV-04-001	7-1437657-7	8050, 8063, 8064, 8065
8PCV-04-004	7-1437657-8	8050, 8063, 8064, 8065
8PCV-04-005	7-1437657-9	8050, 8063, 8064, 8065
8PCV-04-006	8-1437657-0	8050, 8063, 8064, 8065
8PCV-04-008	8-1437657-1	8050, 8063, 8064, 8065
8PCV-05	8-1437657-4	8050, 8063, 8064, 8065
8PCV-05-001	8-1437657-5	8050, 8063, 8064, 8065
8PCV-05-004	8-1437657-6	8050, 8063, 8064, 8065
8PCV-05-005	8-1437657-7	8050, 8063, 8064, 8065
8PCV-05-006	8-1437657-8	8050, 8063, 8064, 8065
8PCV-05-007	9-1437657-0	8050, 8063, 8064, 8065
8PCV-05-008	9-1437657-1	8050, 8063, 8064, 8065
8PCV-06	9-1437657-5	8050, 8063, 8064, 8065
8PCV-06-001	9-1437657-6	8050, 8063, 8064, 8065
8PCV-06-004	9-1437657-7	8050, 8063, 8064, 8065
8PCV-06-006	9-1437657-8	8050, 8063, 8064, 8065
8PCV-06-007	1437658-1	8050, 8063, 8064, 8065
8PCV-06-008	1437658-2	8050, 8063, 8064, 8065
8PCV-07	1437658-9	8050, 8063, 8064, 8065
8PCV-07-001	1-1437658-0	8050, 8063, 8064, 8065
8PCV-07-006	1-1437658-1	8050, 8063, 8064, 8065
8PCV-08	1-1437658-7	8050, 8063, 8064, 8065
8PCV-08-001	1-1437658-8	8050, 8063, 8064, 8065
8PCV-08-004	2-1437658-0	8050, 8063, 8064, 8065
8PCV-08-006	2-1437658-1	8050, 8063, 8064, 8065
8PCV-08-007	2-1437658-3	8050, 8063, 8064, 8065
8PCV-08-009	2-1437658-4	8050, 8063, 8064, 8065
8PCV-09	2-1437658-8	8050, 8063, 8064, 8065
8PCV-10	2-1437658-9	8050, 8063, 8064, 8065
8PCV-10-001	3-1437658-0	8050, 8063, 8064, 8065
8PCV-10-004	3-1437658-1	8050, 8063, 8064, 8065
8PCV-10-005	3-1437658-2	8050, 8063, 8064, 8065
8PCV-10-006	3-1437658-3	8050, 8063, 8064, 8065
8PCV-11	3-1437658-7	8050, 8063, 8064, 8065
8PCV-11-001	3-1437658-8	8050, 8063, 8064, 8065
8PCV-11-004	3-1437658-9	8050, 8063, 8064, 8065
8PCV-11-006	4-1437658-0	8050, 8063, 8064, 8065
8PCV-11-007	4-1437658-1	8050, 8063, 8064, 8065
8PCV-12	4-1437658-2	8050, 8063, 8064, 8065
8PCV-12-001	4-1437658-3	8050, 8063, 8064, 8065
8PCV-12-004	4-1437658-4	8050, 8063, 8064, 8065
8PCV-12-006	4-1437658-5	8050, 8063, 8064, 8065
8PCV-12-007	4-1437658-7	8050, 8063, 8064, 8065
8PCV-12-009	4-1437658-8	8050, 8063, 8064, 8065
8PCV-13	5-1437658-4	8050, 8063, 8064, 8065
8PCV-13-006	5-1437658-5	8050, 8063, 8064, 8065
8PCV-13-007	5-1437658-6	8050, 8063, 8064, 8065
8PCV-14	5-1437658-8	8050, 8063, 8064, 8065
8PCV-14-001	5-1437658-9	8050, 8063, 8064, 8065
8PCV-14-006	6-1437658-0	8050, 8063, 8064, 8065
8PCV-15	6-1437658-2	8050, 8063, 8064, 8065
8PCV-15-005	6-1437658-3	8050, 8063, 8064, 8065
8PCV-16	6-1437658-4	8050, 8063, 8064, 8065
8PCV-16-001	6-1437658-5	8050, 8063, 8064, 8065
8PCV-16-006	6-1437658-6	8050, 8063, 8064, 8065
8PCV-17	6-1437658-8	8050, 8063, 8064, 8065
8PCV-18	6-1437658-9	8050, 8063, 8064, 8065
8PCV-18-001	7-1437658-0	8050, 8063, 8064, 8065
8PCV-18-004	7-1437658-1	8050, 8063, 8064, 8065
8PCV-18-006	7-1437658-2	8050, 8063, 8064, 8065
8PCV-19	7-1437658-4	8050, 8063, 8064, 8065
8PCV-20	7-1437658-5	8050, 8063, 8064, 8065
8PCV-20-00	7-1437658-7	8050, 8063, 8064, 8065
8PCV-20-001	7-1437658-6	8050, 8063, 8064, 8065
8PCV-21	7-1437658-9	8050, 8063, 8064, 8065
8PCV-21-001	8-1437658-0	8050, 8063, 8064, 8065
8PCV-22	8-1437658-1	8050, 8063, 8064, 8065
8PCV-24	8-1437658-2	8050, 8063, 8064, 8065
8PCV-24-004	8-1437658-3	8050, 8063, 8064, 8065
8PCV-24-005	8-1437658-4	8050, 8063, 8064, 8065
8PCV-25-004	8-1437658-5	8050, 8063, 8064, 8065
8PCV-26-001	8-1437658-6	8050, 8063, 8064, 8065
8QCR-02	8-1437658-7	8050, 8063, 8064, 8065
8QCR-02-004	8-1437658-8	8050, 8063, 8064, 8065
8QCR-02-302	8-1437658-9	8050, 8063, 8064, 8065
8QCR-03	9-1437658-0	8050, 8063, 8064, 8065
8QCR-03-004	9-1437658-1	8050, 8063, 8064, 8065
8QCR-04	9-1437658-5	8050, 8063, 8064, 8065
8QCR-04-004	9-1437658-6	8050, 8063, 8064, 8065
8QCR-05	1437659-2	8050, 8063, 8064, 8065
8QCR-06	1437659-4	8050, 8063, 8064, 8065
8QCR-06-004	1437659-5	8050, 8063, 8064, 8065
8QCR-06-006	1437659-6	8050, 8063, 8064, 8065
8QCV-02	1437659-8	8050, 8063, 8064, 8065
8QCV-02-001	1-1437660-4	8050, 8063, 8064, 8065
8QCV-02-004	1437659-9	8050, 8063, 8064, 8065
8QCV-02-005	1-1437659-0	8050, 8063, 8064, 8065
8QCV-02-006	1-1437659-1	8050, 8063, 8064, 8065
8QCV-02-008	1-1437659-2	8050, 8063, 8064, 8065
8QCV-03	1-1437659-5	8050, 8063, 8064, 8065
8QCV-03-002	1-1437659-6	8050, 8063, 8064, 8065
8QCV-04	1-1437659-9	8050, 8063, 8064, 8065
8QCV-04-006	2-1437659-0	8050, 8063, 8064, 8065
8QCV-05	2-1437659-1	8050, 8063, 8064, 8065
8QCV-05-002	1-1437660-9	8050, 8063, 8064, 8065
8QCV-05-006	2-1437659-2	8050, 8063, 8064, 8065
8QCV-06	2-1437659-4	8050, 8063, 8064, 8065
8QCV-07	2-1437659-5	8050, 8063, 8064, 8065
8QCV-08	2-1437659-6	8050, 8063, 8064, 8065
8QCV-09	2-1437659-8	8050, 8063, 8064, 8065
8QCV-10	2-1437659-9	8050, 8063, 8064, 8065
8QCV-10-006	3-1437659-0	8050, 8063, 8064, 8065
8QCV-11-006	3-1437659-1	8050, 8063, 8064, 8065
8STR-02	3-1437659-3	8050, 8063, 8064, 8065
8STR-03	3-1437659-4	8050, 8063, 8064, 8065
8STR-03-004	3-1437659-5	8050, 8063, 8064, 8065
8STR-03-006	3-1437659-6	8050, 8063, 8064, 8065
8STR-04	3-1437659-7	8050, 8063, 8064, 8065
8STR-05	3-1437659-8	8050, 8063, 8064, 8065
8STR-05-004	3-1437659-9	8050, 8063, 8064, 8065
8STR-06-004	4-1437659-0	8050, 8063, 8064, 8065
8STR-07	4-1437659-1	8050, 8063, 8064, 8065

Products for Industrial & Commercial Applications

Dimensions are shown for reference purposes only.

Dimensions are in inches and millimeters unless otherwise specified. Values in brackets are metric equivalents.

Specifications subject to change.

Technical Support Center
1-800-522-6752
www.tycoelectronics.com

Acquired Part Number	Tyco Part Number	Page Number
8STR-08	4-1437659-2	8050, 8063, 8064, 8065
8STR-08-001	1-1437660-2	8050, 8063, 8064, 8065
8STR-10-004	4-1437659-3	8050, 8063, 8064, 8065
8STR-12	4-1437659-4	8050, 8063, 8064, 8065
8STV-02	4-1437659-5	8050, 8063, 8064, 8065
8STV-03	4-1437659-6	8050, 8063, 8064, 8065
8STV-03-004	4-1437659-7	8050, 8063, 8064, 8065
8STV-03-006	4-1437659-8	8050, 8063, 8064, 8065
8STV-04	5-1437659-0	8050, 8063, 8064, 8065
8STV-04-004	5-1437659-1	8050, 8063, 8064, 8065
8STV-04-006	5-1437659-2	8050, 8063, 8064, 8065
8STV-05	5-1437659-3	8050, 8063, 8064, 8065
8STV-05-001	5-1437659-4	8050, 8063, 8064, 8065
8STV-06	5-1437659-6	8050, 8063, 8064, 8065
8STV-07	6-1437659-0	8050, 8063, 8064, 8065
8STV-08	6-1437659-1	8050, 8063, 8064, 8065
8STV-09	6-1437659-2	8050, 8063, 8064, 8065
8STV-09-006	6-1437659-3	8050, 8063, 8064, 8065
8STV-10-006	6-1437659-4	8050, 8063, 8064, 8065
8STV-12-004	6-1437659-5	8050, 8063, 8064, 8065
8STV-12-006	6-1437659-6	8050, 8063, 8064, 8065
8STV-14	6-1437659-7	8050, 8063, 8064, 8065
8STV-15	6-1437659-8	8050, 8063, 8064, 8065
8STV-16	6-1437659-9	8050, 8063, 8064, 8065
8STV-20	7-1437659-0	8050, 8063, 8064, 8065
8STV-24	7-1437659-1	8050, 8063, 8064, 8065
8TBV-04-006	7-1437659-2	8050, 8063, 8064, 8065
8TK2-2	6-1437685-2	8085
8TK2-6	6-1437685-5	8085
8TK2-12	6-1437685-1	8085
8TK2-24	6-1437685-3	8085
8TK2-48	6-1437685-4	8085
8WWR-03	7-1437659-4	8050, 8063, 8064, 8065
8WWV-02	7-1437659-6	8050, 8063, 8064, 8065
8WWV-03	7-1437659-7	8050, 8063, 8064, 8065
8WWV-04	8-1437659-4	8050, 8063, 8064, 8065
8WWV-04-004	8-1437659-5	8050, 8063, 8064, 8065
8WWV-04-006	8-1437659-6	8050, 8063, 8064, 8065
8WWV-05	8-1437659-8	8050, 8063, 8064, 8065
8WWV-05-006	8-1437659-9	8050, 8063, 8064, 8065
8WWV-05-008	9-1437659-0	8050, 8063, 8064, 8065
8WWV-06-006	9-1437659-1	8050, 8063, 8064, 8065
8WWV-19	1437660-2	8050, 8063, 8064, 8065
8WWV-19-002	1437660-9	8050, 8063, 8064, 8065
8WWV-20-004	1437660-3	8050, 8063, 8064, 8065
13	1-1437381-0	8103
14	1-1437381-1	8103
15	1-1437381-2	8103
24	1-1437381-8	8123
27	1-1437381-9	8123
40-BU	2-1437393-2	8118
41-BU	2-1437393-3	8124
43	5-1437381-5	8124
54-BU	2-1437393-5	8117
57	8-1437381-2	8118
70	1437382-6	8110
71	1-1437382-2	8110
73	1-1437382-3	8110
76	1-1437382-6	8129
93-BU	4-1437390-4	8129
110-BU	1-1437392-8	8102
115-BU	1437381-5	8102
120	2-1437392-1	8102
130-BU	2-1437392-5	8102
211	1437390-1	8122
221	1437390-8	8122
221	3-1437390-1	8122
222	1437390-9	8122
223	1-1437390-2	8122
223-BU	3-1437390-6	8122
228	1-1437390-3	8122
228-BU	1-1437381-5	8122
322-HCS14P2-100	1-1437514-8	5045
322-HCS14P3-100	1-1437514-9	5045
322-HCS5P2-100	2-1437514-0	5045
322-HCS5P2-314	2-1437514-5	5045
322-HCS5P2-316	2-1437514-6	5045
322-HCS5P2-318	2-1437514-7	5045
322-HCS5P2-320	2-1437514-8	5045
322-HCS5P2-400	2-1437514-9	5045
322-HCS5P2-422	3-1437514-0	5045
322-HCS5P2-600	3-1437514-1	5045
322-HCS5P2-624	3-1437514-2	5045
322-HCS5P2-628	3-1437514-3	5045
322-HCS5P2-632	3-1437514-4	5045
322-HCS5P2-640	3-1437514-5	5045
322-HCS5P3-100	3-1437514-6	5045
322-HCS5P3-300	3-1437514-7	5045
322-HCS5P3-308	3-1437514-8	5045
322-HCS5P3-600	4-1437514-0	5045
322-HCS5P3-624	4-1437514-1	5045
322-HCS5P3-628	4-1437514-2	5045
322-HCS6P2-100	4-1437514-3	5045
322-HCS6P3-100	4-1437514-4	5045
322-HCS8P2-100	4-1437514-5	5045
322-HCS8P3-100	4-1437514-7	5045
398-HK-001	4-1437514-8	5047
398-HK-002	4-1437514-9	5047
399-HT-112	5-1437514-3	5047
399-HT-113	5-1437514-5	5047
399-HT-114	5-1437514-7	5047
501-0607E	1437063-3	4018
501-0607ES	1437063-4	4018
501-0627E	1437063-7	4021
501-0627ES	1437063-8	4021
501-1007E	2-1437063-1	4018
501-1007ES	2-1437063-3	4018
501-1027E	2-1437063-8	4021
501-1027ES	3-1437063-0	4021
501-1207E	3-1437063-5	4018
501-1207ES	3-1437063-6	4018
501-1227E	3-1437063-9	4021
501-1227ES	4-1437063-1	4021
501-1407E	4-1437063-4	4018
501-1407ES	4-1437063-6	4018
501-1427	5-1437063-1	4021
501-1427E	5-1437063-2	4021
501-1427ES	5-1437063-3	4021
501-1607E	5-1437063-6	4018
501-1607ES	5-1437063-8	4018
501-1627	6-1437063-2	4021
501-1627E	6-1437063-3	4021
501-1627ES	6-1437063-4	4021
501-2007E	7-1437063-1	4018
501-2007ES	7-1437063-3	4018
501-2027E	8-1437063-0	4021
501-2027ES	8-1437063-1	4021
501-2407E	8-1437063-6	4018
501-2407ES	8-1437063-7	4018
501-2427E	9-1437063-0	4021
501-2427ES	9-1437063-1	4021
501-2607E	9-1437063-5	4018
501-2607ES	9-1437063-7	4018
501-2627E	1437064-3	4021
501-2627ES	1437064-5	4021
501-3007E	1-1437064-4	4018
501-3007ES	1-1437064-5	4018
501-3027E	2-1437064-3	4021
501-3027ES	2-1437064-5	4021
501-3407E	3-1437064-3	4018
501-3407ES	3-1437064-5	4018
501-3427E	3-1437064-9	4021
501-3427ES	4-1437064-1	4021
501-3627E	5-1437064-2	4021
501-3627ES	5-1437064-3	4021
501-4007E	5-1437064-6	4018
501-4007ES	5-1437064-8	4018
501-4027	6-1437064-7	4021
501-4027E	6-1437064-8	4021
501-4027ES	7-1437064-0	4021
501-5007E	8-1437064-8	4018
501-5007ES	9-1437064-1	4018
501-5027E	9-1437064-8	4021
501-5027ES	1437065-1	4021
501-6007E	1-1437065-8	4018
501-6007ES	2-1437065-0	4018
501-6027E	2-1437065-4	4021
501-6027ES	2-1437065-7	4021
501-6407E	3-1437065-4	4018
501-6407ES	3-1437065-5	4018
501-6427E	3-1437065-9	4021
501-6427ES	4-1437065-0	4021
504-AG10D	5-1437529-9	5064
504-AG10F	6-1437529-0	5064
504-AG11D	6-1437529-1	5064
504-AG12D	6-1437529-2	5064
506-AG10D	6-1437529-5	5009
506-AG11D	6-1437529-8	5009
506-AG12D	7-1437529-1	5009
508-AG10D	7-1437529-5	5009
508-AG11D	7-1437529-9	5009
508-AG11D-IES	8-1437529-0	5009
508-AG12D	8-1437529-3	5009
508-AG4A	9-1437529-3	5054
508-AG4F	9-1437529-5	5054
508-AG7D	9-1437529-6	5054
508-AG8D	9-1437529-7	5053, 5054
508-AG8D-5	1437530-3	5055
511	1437391-2	8116
511-BU	2-1437391-4	8116
514-AG7D	3-1437531-8	5054
514-AG10D	1-1437531-7	5009
514-AG11D	2-1437531-0	5009
514-AG12D	2-1437531-4	5009
514-AG21D	3-1437531-0	5054
515	1-1437391-0	8116
516-AG7D	5-1437531-9	5054
516-AG10D-ESL	4-1437531-0	5009
516-AG12D	4-1437531-8	5009
516-AG21D	5-1437531-3	5053, 5054
518-AG7D	7-1437531-5	5054
518-AG10D-ESL	6-1437531-5	5009
518-AG11D	6-1437531-9	5009
518-AG12D	7-1437531-3	5009
520-AG7D	9-1437531-7	5054
520-AG10D	7-1437531-8	5009
520-AG10D-ESL	7-1437531-9	5009
520-AG12D	8-1437531-6	5009
521	1-1437391-5	8116
521	3-1437391-4	8116
522-AG10D	9-1437531-9	5009
522-AG11D	1437532-2	5009
522-AG12D	1437532-3	5009
524	1-1437391-6	8116
524	3-1437391-5	8116
524-AG12D	1-1437532-7	5009
524-AG13D	1-1437532-9	5009
524-AG66D	2-1437532-5	5009
524PS	3-1437391-6	8117
525	1-1437391-8	8116
525	3-1437391-7	8116
527	1-1437391-9	8116
527	3-1437391-9	8116
528-AG10D-ESL	3-1437532-3	5009
528-AG12D	4-1437532-1	5009
529	2-1437391-0	8117
529	4-1437391-0	8117
532-AG10D	5-1437532-8	5009
532-AG11D	6-1437532-1	5009
532-AG12D	6-1437532-5	5009
536-AG11D	7-1437532-1	5009
536-AG12D	7-1437532-2	5009
540-AG10D	7-1437532-6	5009
540-AG10D-ESL	7-1437532-7	5009
540-AG12D	8-1437532-3	5009
608-AG1	1437515-6	5049
608-AG1T	1437515-9	5049
608-AG19	1437515-8	5052
608-AG21	1-1437515-0	5052
608-AG22	1-1437515-1	5052
608-CG1	1-1437515-2	5049
608-CG1T	1-1437515-3	5049
609-0600M	1-1437020-8	4010
609-0601M	1-1437020-9	4010

Products for Industrial & Commercial Applications

Dimensions are shown for reference purposes only.

Dimensions are in inches and millimeters unless otherwise specified. Values in brackets are metric equivalents.

Specifications subject to change.

Technical Support Center
1-800-522-6752
www.tycoelectronics.com

Acquired Part Number	Tyco Part Number	Page Number
609-0607	2-1437044-4	4016
609-0627	2-1437044-7	4014
609-0630	2-1437020-0	4010
609-0641	2-1437020-2	4010
609-0647	3-1437044-1	4016
609-0657	3-1437044-2	4014
609-0807	2-1437054-9	4019
609-0807ES	3-1437054-0	4019
609-0827	3-1437044-4	4014, 4022
609-0837	3-1437044-5	4022
609-0837ES	3-1437044-6	4022
609-1000M	2-1437020-4	4010
609-1001M	2-1437020-7	4010
609-1007	3-1437044-7	4016, 4019
609-1017	4-1437044-2	4019
609-1027	4-1437044-3	4014, 4022
609-1030	3-1437020-0	4010
609-1037	4-1437044-6	4022
609-1041	3-1437020-9	4010
609-1047	4-1437044-7	4016
609-1057	4-1437044-8	4014
609-1227	5-1437044-2	4014, 4022
609-1400M	4-1437020-2	4010
609-1401M	4-1437020-4	4010
609-1407	5-1437044-3	4016, 4019
609-1417	5-1437044-8	4019
609-1427	5-1437044-9	4014, 4022
609-1430	4-1437020-6	4010
609-1437	6-1437044-6	4022
609-1441	5-1437020-2	4010
609-1447	6-1437044-7	4016
609-1457	6-1437044-8	4014
609-1600M	5-1437020-6	4010
609-1601M	5-1437020-9	4010
609-1607	7-1437044-3	4016, 4019
609-1617	7-1437044-9	4019
609-1627	8-1437044-0	4014, 4022
609-1630	6-1437020-1	4010
609-1637	8-1437044-7	4022
609-1641	6-1437020-8	4010
609-1647	8-1437044-9	4016
609-1657	9-1437044-0	4014
609-2000M	7-1437020-2	4010
609-2001M	7-1437020-6	4010
609-2007	9-1437044-5	4016, 4019
609-2017	1437045-1	4019
609-2027	1437045-2	4014, 4022
609-2030	7-1437020-9	4010
609-2037	1437045-9	4022
609-2041	8-1437020-8	4010
609-2047	1-1437045-0	4016
609-2057	1-1437045-1	4014
609-2400M	9-1437020-1	4010
609-2401M	9-1437020-2	4010
609-2407	1-1437045-6	4016, 4019
609-2417	1-1437045-8	4019
609-2427	1-1437045-9	4014, 4022
609-2430	9-1437020-3	4010
609-2437	2-1437045-1	4022
609-2441	9-1437020-6	4010
609-2447	2-1437045-2	4016
609-2457	2-1437045-3	4014
609-2600M	9-1437020-8	4010
609-2601M	1437021-2	4010
609-2607	2-1437045-5	4016, 4019
609-2617	3-1437045-1	4019
609-2627	3-1437045-2	4014, 4022
609-2630	1437021-5	4010
609-2637	3-1437045-6	4022
609-2641	1-1437021-4	4010
609-2647	3-1437045-8	4016
609-2657	3-1437045-9	4014
609-3007ES	2-1437050-4	4019
609-3017ES	2-1437050-6	4019
609-3027	4-1437045-2	4014, 4022
609-3027E	4-1437045-3	4022
609-3027ES	4-1437045-4	4022
609-3047	4-1437045-5	4016
609-3057	4-1437045-6	4014
609-3400M	1-1437021-9	4010
609-3401M	2-1437021-2	4010
609-3407	4-1437045-7	4019
609-3417	5-1437045-3	4019
609-3427	5-1437045-4	4014, 4022
609-3430	2-1437021-6	4010
609-3437	5-1437045-9	4022
609-3441	3-1437021-4	4010
609-3447	6-1437045-0	4016
609-3600M	3-1437021-8	4010
609-3601M	3-1437021-9	4010
609-3630	4-1437021-0	4010
609-3641	4-1437021-2	4010
609-3657	7-1437045-1	4014
609-4000M	4-1437021-4	4010
609-4001M	4-1437021-7	4010
609-4007	7-1437045-3	4016, 4019
609-4017	8-1437045-1	4019
609-4027	8-1437045-3	4014, 4022
609-4030	5-1437021-0	4010
609-4037	9-1437045-2	4022
609-4041	5-1437021-7	4010
609-4047	9-1437045-4	4016
609-4057	9-1437045-5	4014
609-5000M	6-1437021-8	4010
609-5001M	7-1437021-1	4010
609-5007	1437046-6	4016, 4019
609-5017	1-1437046-4	4019
609-5027	1-1437046-5	4014, 4022
609-5030	7-1437021-4	4010
609-5037	2-1437046-1	4022
609-5041	8-1437021-3	4010
609-5047	2-1437046-2	4016
609-5057	2-1437046-3	4014
609-6000M	9-1437021-6	4010
609-6001M	9-1437021-8	4010
609-6007	3-1437046-1	4016, 4019
609-6017	3-1437046-3	4019
609-6027	3-1437046-4	4014, 4022
609-6030	9-1437021-9	4010
609-6037ES	7-1437051-0	4022
609-6041	1437022-7	4010
609-6047	3-1437046-9	4016
609-6057	4-1437046-0	4014
609-6401M	1-1437022-1	4010
609-6407	4-1437046-3	4016, 4019
609-6417	4-1437046-4	4019
609-6427	4-1437046-6	4014, 4022
609-6430	1-1437022-2	4010
609-6437	4-1437046-7	4022
609-6441	1-1437022-5	4010
609-6447	4-1437046-8	4016
609-6457	4-1437046-9	4014
610-AG22	1-1437515-5	5052
611-BU	1437401-3	8106
614-AG1	1-1437515-7	5049
614-AG1T	1-1437515-8	5049
614-BG1	1-1437515-9	5049
614-BU	2-1437393-6	8106
614-CG1	2-1437515-0	5049
614-CG1T	2-1437515-2	5049
614-CG2	2-1437515-3	5049
614-CG3	2-1437515-4	5049
615-BU	2-1437393-7	8106
616-AG1	2-1437515-8	5049
616-AG1T	2-1437515-9	5049
616-AG2	3-1437515-0	5049
616-BG1	1437516-4	5049
616-CG1	3-1437515-1	5049
616-CG1T	3-1437515-3	5049
616-CG2	3-1437515-5	5049
616-CG3	3-1437515-6	5049
618-AG1	4-1437515-1	5049
618-AG1T	4-1437515-2	5049
618-BU	2-1437393-8	8106
618-CG1	4-1437515-3	5049
618-CG1T	4-1437515-4	5049
620-AG1	4-1437515-5	5049
620-AG1T	4-1437515-6	5049
620-BG1	4-1437515-7	5049
620-CG1	4-1437515-8	5049
620-CG1T	4-1437515-9	5049
621	1437393-7	8106
621	3-1437393-0	8106
622-AG1	5-1437515-1	5049
622-CG1	5-1437515-2	5049
622-CG1T	5-1437515-3	5049
624-AG1	5-1437515-5	5049
624-AG1T	5-1437515-6	5049
624-CG1	5-1437515-7	5049
624-CG1T	5-1437515-8	5049
627	1-1437393-6	8107
627	2-1437394-3	8107
628	1-1437393-7	8106
628	3-1437393-6	8106
628-AG2	6-1437515-4	5049
628-CG2	6-1437515-6	5049
628-CG2T	6-1437515-7	5049
629	1-1437393-8	8107
629	3-1437393-7	8107
630-BU	3-1437393-8	8106
632-CG2	6-1437515-9	5049
636-CG1T	7-1437515-2	5049
640-AG1	7-1437515-3	5049
640-AG1T	7-1437515-4	5049
640-BG1	7-1437515-5	5049
640-CG1	7-1437515-6	5049
640-CG1T	7-1437515-7	5049
706-AG1D	1437542-6	5011
706-AG2D	1437542-7	5011
706-AG2D-ES	1437542-8	5011
706-AG2D-ESL	1437542-9	5011
708-AG1D	1-1437542-0	5011
708-AG2D	1-1437542-1	5011
708-AG2D-ES	1-1437542-2	5011
714	1437394-4	8108
714	2-1437394-5	8108
714-AG1D	1-1437542-3	5011
714-AG20D	1-1437542-4	5011
714-AG2D-ES	1-1437542-5	5011
714-AG2D-ESL	1-1437542-6	5011
714PS	2-1437394-6	8108
715	1437394-5	8109
715	2-1437394-7	8109
716-AG1D	1-1437542-7	5011
716-AG2D	1-1437542-9	5011
716-AG2D-ES	2-1437542-0	5011
718-AG1D	2-1437542-2	5011
718-AG2D	2-1437542-4	5011
718-AG2D-ES	2-1437542-5	5011
718-AG2D-ESL	2-1437542-6	5011
720-AG1D	2-1437542-7	5011
720-AG2D	2-1437542-9	5011
720-AG2D-ES	3-1437542-0	5011
720-AG2D-ESL	3-1437542-1	5011
720-AG20D	2-1437542-8	5011
722-AG1D	3-1437542-2	5011
722-AG2D	3-1437542-5	5011
722-AG2D-ES	3-1437542-6	5011
722-AG21D	3-1437542-3	5011
722-AG22D	3-1437542-4	5011
724	2-1437394-9	8108
724-AG1D	3-1437542-8	5011
724-AG2D	4-1437542-3	5011
724-AG2D-ES	4-1437542-4	5011
724-AG3D	4-1437542-5	5011
724-AG4D	4-1437542-6	5011
724-AG4D-ES	4-1437542-7	5011
724-AG4D-ESL	4-1437542-8	5011
724-AG10D	3-1437542-7	5011
724-AG20D	3-1437542-9	5011
724-AG21D	4-1437542-1	5011
724-AG22D-ES	4-1437542-2	5011
727	1-1437394-7	8109
728	1-1437394-8	8108

Products for Industrial & Commercial Applications

Dimensions are shown for reference purposes only.

Dimensions are in inches and millimeters unless otherwise specified. Values in brackets are metric equivalents.

Specifications subject to change.

Technical Support Center
1-800-522-6752
www.tycoelectronics.com

Acquired Part Number	Tyco Part Number	Page Number
728	3-1437394-2	8108
728-AG3D	5-1437542-1	5011
728-AG4D	5-1437542-3	5011
728-AG4D-ES	5-1437542-4	5011
728-AG4D-ESL	5-1437542-5	5011
728-AG30D	5-1437542-0	5011
728-AG40D	5-1437542-2	5011
729	3-1437394-3	8109
732-AG3D	5-1437542-7	5011
732-AG4D	5-1437542-8	5011
732-AG4D-ES	5-1437542-9	5011
732-AG4D-ESL	6-1437542-0	5011
736-M0020	5-1437514-8	5047
740-AG3D	6-1437542-1	5011
740-AG4D	6-1437542-4	5011
740-AG4D-ES	6-1437542-5	5011
740-AG40D	6-1437542-2	5011
779-2100	1437000-6	4010
779-2151	1437000-9	4010
779-3130	5-1437000-6	4010
779-3151	6-1437000-4	4010
779-3200	1437001-4	4010
779-3500XT	1437001-7	4010
808-AG10D-ES	1437539-2	5013
808-AG11D-ES	1437539-5	5013
808-AG11D-ESL	1437539-6	5013
808-AG12D-ES	1437539-8	5013
814	1437395-2	8128
814-AG10D-ES	1-1437539-4	5013
814-AG11D-ES	1-1437539-6	5013
814-AG11D-ESL	1-1437539-7	5013
814-AG12D-ES	2-1437539-0	5013
816-AG10D-ES	2-1437539-6	5013
816-AG11D-ES	2-1437539-8	5013
816-AG11D-ESL	2-1437539-9	5013
816-AG12D-ES	3-1437539-1	5013
818-AG10D-ES	4-1437539-1	5013
818-AG11D-ES	4-1437539-3	5013
818-AG11D-ESL	4-1437539-4	5013
818-AG12D-ES	4-1437539-6	5013
820-AG10D-ES	5-1437539-0	5013
820-AG11D-ES	5-1437539-2	5013
820-AG11D-ESL	5-1437539-3	5013
822-AG10D-ES	6-1437539-0	5013
822-AG11D-ES	6-1437539-2	5013
822-AG11D-ESL	6-1437539-3	5013
822-AG12D-ES	6-1437539-4	5013
824-AG10D-ES	6-1437539-7	5013
824-AG11D-ES	6-1437539-9	5013
824-AG11D-ESL	7-1437539-0	5013
824-AG12D-ES	7-1437539-2	5013
824-AG30D-ES	7-1437539-3	5013
824-AG30D-ESL	7-1437539-4	5013
824-AG31D-ES	7-1437539-6	5013
824-AG31D-ESL	7-1437539-7	5013
824-AG31SM	8-1437533-1	5015
824-AG32D-ES	8-1437539-1	5013
828-AG10D	1437538-3	5013
828-AG10D-ES	8-1437539-9	5013
828-AG11D	1437538-4	5013
828-AG11D-ES	9-1437539-1	5012, 5013
828-AG11D-ESL	9-1437539-2	5013
828-AG11SM	1437538-9	5015
828-AG12D	1-1437538-0	5013
828-AG12D-ES	9-1437539-4	5013
828-AG12SM	1-1437538-1	5015
830-BU	1-1437395-4	8128
832-AG10D-ES	1437540-1	5013
832-AG11D-ES	1437540-2	5013
832-AG11D-ESL	1437540-3	5013
832-AG12D-ES	1437540-5	5013
836-AG11D-ES	1-1437540-0	5013
836-AG11D-ESL	1-1437540-1	5013
836-AG12D-ES	1-1437540-2	5013
840-AG10D-ES	1-1437540-4	5013
840-AG11D-ES	1-1437540-6	5013
840-AG11D-ESL	1-1437540-7	5013
840-AG12D-ES	1-1437540-9	5013
842-AG11D-ES	2-1437540-3	5013
842-AG11D-ESL	2-1437540-4	5013
848-AG10D-ES	2-1437540-5	5013
848-AG11D-ES	2-1437540-6	5013
848-AG11F-ESL	2-1437540-7	5013
848-AG12D-ES	2-1437540-8	5013
864-AG10D	3-1437540-1	5014
864-AG10D-ES	3-1437540-2	5014
1156	1437392-1	8103
8000-AG2	1437503-2	5056, 5057, 5059
8000-AG3	1437503-3	5057
8000-AG9	1437503-6	5057, 5059
8000-AG36	1437503-4	5057, 5060
8004-1G1	1-1437503-0	5057
8004-1G2	1-1437503-3	5057
8004-1G3	1-1437503-7	5057
8004-1G4	1-1437503-8	5057, 5058
8004-1G16	1-1437503-2	5057
8004-1G23	1-1437503-4	5057, 5058
8004-1G26	1-1437503-6	5057
8004-23G1	2-1437503-1	5057
8041-1G2	1-1437502-2	5078
8041-1G2-1	1-1437502-3	5078
8041-1G3-1	1-1437502-4	5078
8041-1G4	1-1437502-5	5078
8041-1G4-1	1-1437502-6	5077, 5078
8041-1G5	1-1437502-7	5078
8041-1G6	1-1437502-8	5078
8041-1G7-1	1-1437502-9	5078
8041-1G8	2-1437502-0	5078
8041-1G9-1	2-1437502-1	5078
8041-1G11	5-1437502-4	5078
8046-1	2-1437502-2	5080
8046-1G2	2-1437502-4	5080
8046-1G3	2-1437502-5	5080
8046-1G4	2-1437502-6	5080
8046-1G5	2-1437502-7	5080
8046-1G6	2-1437502-8	5080
8046-1G7	2-1437502-9	5080
8046-1G10	2-1437502-3	5080
8058-1G19	1437508-5	5068
8058-1G23	1437508-7	5068
8058-1G24	1437508-9	5068
8058-1G29	1-1437508-2	5068
8058-1G30	1-1437508-4	5068
8058-1G31	1-1437508-5	5068
8058-1G32	1-1437508-6	5068
8058-1G34	1-1437508-8	5068
8058-1G42	1-1437508-9	5068
8058-1G45	2-1437508-0	5068
8058-1G46	2-1437508-1	5068
8058-1G47	2-1437508-2	5068
8058-1G48	2-1437508-3	5068
8058-1G49	2-1437508-4	5068
8058-1G51	2-1437508-6	5068
8058-1G52	2-1437508-7	5068
8058-1G57	2-1437508-8	5068
8058-1G59	2-1437508-9	5068
8058-1G63	3-1437508-0	5068
8058-24G1	3-1437508-2	5068
8058-39G1	3-1437508-5	5068
8058-39G3	3-1437508-6	5068
8058-39G4	3-1437508-7	5068
8058-39G5	3-1437508-8	5068
8058-39G6	3-1437508-9	5068
8059-2G1	4-1437508-1	5057
8059-2G2	4-1437508-3	5057
8059-2G3	4-1437508-4	5057
8059-2G4	4-1437508-5	5057
8059-2G5	4-1437508-6	5057
8059-2G6	4-1437508-7	5057
8059-2G7	4-1437508-8	5065
8059-2G8	4-1437508-9	5057
8059-2G9	5-1437508-0	5057
8059-2G10	4-1437508-2	5057
8059-4G1	5-1437508-1	5057
8059-4G4	5-1437508-2	5057
8060-1G3	1-1437504-4	5069
8060-1G4	1-1437504-7	5069
8060-1G5	1-1437504-9	5069
8060-1G6	2-1437504-1	5067, 5069
8060-1G7	2-1437504-3	5069
8060-1G8	2-1437504-5	5069
8060-1G9	2-1437504-6	5069
8060-1G10	1437504-3	5069
8060-1G11	1437504-4	5069
8060-1G12	1437504-5	5069
8060-1G13	1437504-6	5069
8060-1G16	1437504-7	5071, 5072
8060-1G17	1437504-8	5069
8060-1G20	1-1437504-0	5072
8060-1G22	1-1437504-1	5069
8060-1G23	1-1437504-2	5072
8060-1G25	1-1437504-3	5072
8060-1G34	1-1437504-5	5072
8080-1G1	2-1437504-9	5074
8080-1G2	3-1437504-8	5074
8080-1G3	4-1437504-2	5074
8080-1G4	5-1437504-0	5074
8080-1G7	5-1437504-3	5073, 5074
8080-1G9	5-1437504-5	5074
8080-1G10	3-1437504-0	5074
8080-1G13	3-1437504-1	5074
8080-1G14	3-1437504-2	5074
8080-1G15	3-1437504-3	5074
8080-1G16	3-1437504-4	5074
8080-1G17	3-1437504-5	5074
8080-1G20	3-1437504-9	5074
8080-1G24	4-1437504-0	5074
8080-1G25	4-1437504-1	5074
8080-1G31	4-1437504-3	5074
8080-1G32	4-1437504-4	5074
8080-1G33	4-1437504-5	5074
8080-1G34	4-1437504-6	5074
8080-1G35	4-1437504-7	5074
8080-1G37	4-1437504-8	5074
8080-1G39	4-1437504-9	5074
8080-1G45	5-1437504-1	5074
8128-39P6	2-1437509-9	5050
8128-40P10	3-1437509-1	5050
8128-41P6	3-1437509-3	5050
8134-HC-5P2	6-1437514-6	5044
8134-HC-5P3	6-1437514-7	5044
8134-HC-6P2	6-1437514-8	5044
8134-HC-6P3	6-1437514-9	5044
8134-HC-8P2	7-1437514-0	5044
8134-HC-8P3	7-1437514-1	5044
8134-HC-12P2	5-1437514-9	5044
8134-HC-12P3	6-1437514-0	5044
8134-HC-14P2-B	1-1437506-6	5044
8134-HC-14P3	6-1437514-2	5044
8136-475G1	1437507-7	5062
8136-475G2	1-1437507-0	5062
8136-475G3	1-1437507-3	5062
8136-475G4	1-1437507-5	5062
8136-475G7	1-1437507-7	5062
8136-475G8	1-1437507-9	5061, 6062
8136-475G9	2-1437507-1	5062
8136-477P1	2-1437507-2	5062
8136-650P2	2-1437507-3	5062
8136-650P3	2-1437507-4	5062
8136-651P2	2-1437507-5	5062
8136-651P3	2-1437507-6	5062
8136-652P1	2-1437507-7	5062
8136-652P2	2-1437507-8	5062
8136-652P3	2-1437507-9	5062
8136-652P4	3-1437507-0	5062
8136-652P5	3-1437507-1	5062
8136-652P6	3-1437507-2	5062
11510	1437391-1	8103
11511	1437394-2	8103
12503	1437392-5	8103
12506	1437392-6	8103
12508	1437392-7	8103
12513	1437392-9	8103
22306-BU	3-1437390-7	8122

Products for Industrial & Commercial Applications

Dimensions are shown for reference purposes only.

Dimensions are in inches and millimeters unless otherwise specified. Values in brackets are metric equivalents.

Specifications subject to change.

Technical Support Center
1-800-522-6752
www.tycoelectronics.com

Acquired Part Number	Tyco Part Number	Page Number
51408	2-1437391-9	8116
51505-1	796745-1	8116
51508	3-1437391-1	8116
51510	1-1437391-1	8116
52505	3-1437391-8	8116
61512	1437393-4	8111
62106	1437393-8	8111
62112	1437393-9	8111
62148	1-1437393-0	8111
62406	3-1437393-2	8111
62506	3-1437393-4	8111
62507	1-1437393-3	8111
62580	1-1437393-4	8111
72507	1-1437394-3	8111
72510	3-1437394-1	8111
72516	1-1437394-4	8111
74100	4-1437393-1	8111
82403-1	1437395-4	8074
82405	1437395-5	8128
211010	1437390-2	8122
ADE02	1437586-2	6006
ADE03	1437586-7	6006
ADE04	1-1437586-0	6006
ADE05	1-1437586-5	6006
ADE06	1-1437586-8	6006
ADE07	2-1437586-3	6006
ADE08	2-1437586-6	6006
ADE09	3-1437586-0	6006
ADE10	3-1437586-2	6006
ADE12	3-1437586-8	6006
ADF02	4-1437586-2	6006
ADF03	5-1437586-1	6006
ADF04	5-1437586-7	6006
ADF05	6-1437586-5	6006
ADF06	7-1437586-1	6006
ADF07	8-1437586-1	6006
ADF08	8-1437586-6	6006
ADF09	9-1437586-6	6006
ADF10	1437587-1	6006
ADP02	1-1437587-1	6007
ADP04	1-1437587-5	6007
ADP05	2-1437587-0	6007
ADP06	2-1437587-2	6007
ADP07	2-1437587-5	6007
ADP08	2-1437587-6	6007
ADP09	3-1437587-0	6007
ADP10	3-1437587-3	6007
ADPA02	4-1437587-7	6007
ADPA04	4-1437587-8	6007
ADPA05	5-1437587-2	6007
ADPA06	5-1437587-4	6007
ADPA07	5-1437587-7	6007
ADPA08	5-1437587-8	6007
ADPA10	6-1437587-1	6007
ASE22	1437581-2	6012
ASE22G	1437581-4	6012
ASE22R	1437581-8	6009
ASE22RG	1437581-9	6012
ASE42	1-1437581-4	6012
ASE42G	1-1437581-6	6012
ASE42R	1-1437581-9	6012
ASE42RG	2-1437581-0	6012
ASE43	2-1437581-5	6012
ASE43G	2-1437581-6	6012
ASE43R	2-1437581-9	6012
ASE43RG	3-1437581-0	6012
ASE62	3-1437581-1	6012
ASE62G	3-1437581-3	6009
ASE62R	3-1437581-6	6012
ASE62RG	3-1437581-7	6012
ASF22R	6-1437581-2	6009
ASF22RG	6-1437581-3	6012
ASF42	6-1437581-8	6012
ASF42R	7-1437581-3	6012
ASF42RG	7-1437581-4	6012
ASF43	7-1437581-8	6012
ASF43RG	8-1437581-2	6012
ASF62	8-1437581-4	6012
ASF62R	8-1437581-9	6012
ASF62RG	9-1437581-1	6012
BC6-P104-07	1437662-1	8050, 8059, 8060
BC6-P104-20	7-1437662-2	8050, 8059, 8060
BC6-P107-08	1437662-2	8050, 8059, 8060
BC6-P108-02	1437662-4	8050, 8059, 8060
BC6-P108-03	1437662-5	8050, 8059, 8060
BC6-P108-04	1437662-8	8050, 8059, 8060
BC6-P108-05	1437662-9	8050, 8059, 8060
BC6-P108-06	1-1437662-0	8050, 8059, 8060
BC6-P108-07	1-1437662-1	8050, 8059, 8060
BC6-P108-08	1-1437662-2	8050, 8059, 8060
BC6-P108-09	1-1437662-3	8050, 8059, 8060
BC6-P108-09-045	1-1437662-4	8050, 8059, 8060
BC6-P108-10	1-1437662-5	8050, 8059, 8060
BC6-P108-11	1-1437662-6	8050, 8059, 8060
BC6-P108-12	1-1437662-7	8050, 8059, 8060
BC6-P108-14	1-1437662-8	8050, 8059, 8060
BC6-P108-16	1-1437662-9	8050, 8059, 8060
BC6-P108-19	6-1437662-7	8050, 8059, 8060
BC6-P508-03	2-1437662-0	8050, 8059, 8060
BC6-Q208-03	2-1437662-1	8050, 8059, 8060
BC6-Q208-05	2-1437662-2	8050, 8059, 8060
BC6-Q308-02	2-1437662-3	8050, 8059, 8060
BC6-Q308-03	2-1437662-4	8050, 8059, 8060
BC6-Q308-06	2-1437662-8	8050, 8059, 8060
BC6-Q308-10	2-1437662-9	8050, 8059, 8060
BC6-Q308-13	3-1437662-0	8050, 8059, 8060
BC6-Q308-15	3-1437662-1	8050, 8059, 8060
BC6-Q408-03	3-1437662-2	8050, 8059, 8060
BC6-Q408-10	3-1437662-3	8050, 8059, 8060
BC6-Q408-14	3-1437662-4	8050, 8059, 8060
BC6-Q508-02	3-1437662-5	8050, 8059, 8060
BC6-Q608-03	3-1437662-6	8050, 8059, 8060
BC6-Q608-03-281	3-1437662-7	8050, 8059, 8060
BC6-Q608-05	3-1437662-8	8050, 8059, 8060
BC6-Q608-06	3-1437662-9	8050, 8059, 8060
BC6-Q608-10	4-1437662-0	8050, 8059, 8060
BC6-Q608-10-280	4-1437662-1	8050, 8059, 8060
BC6-T208-02	796603-5	8050, 8059, 8060
BC6-T308-03	4-1437662-2	8050, 8059, 8060
BC6-T308-03-283	4-1437662-3	8050, 8059, 8060
BC6-T308-07	796603-1	8050, 8059, 8060
BC6-T404-02	4-1437662-4	8050, 8059, 8060
BC6-T408-04	4-1437662-6	8050, 8059, 8060
BC6-T408-08	4-1437662-8	8050, 8059, 8060
BC6-T608-04	4-1437662-9	8050, 8059, 8060
BC6-T608-07	5-1437662-0	8050, 8059, 8060
BC6-T608-12	5-1437662-3	8050, 8059, 8060
BC6-W108-09	5-1437662-4	8050, 8059, 8060
BC6-W407-08	5-1437662-7	8050, 8059, 8060
BC6-W408-03	5-1437662-8	8050, 8059, 8060
BC6-W408-04	6-1437662-1	8050, 8059, 8060
BC6-W408-06	6-1437662-2	8050, 8059, 8060
BC6-W408-08	6-1437662-3	8050, 8059, 8060
BC6-W408-10	6-1437662-4	8050, 8059, 8060
BC6-W408-13	6-1437662-5	8050, 8059, 8060
C14	2-1437627-9	6062
C14L	3-1437627-0	6062
C330-AG	5-1437627-5	6059
C332	5-1437627-6	6059
C339	5-1437627-8	6059
D012514	1437389-1	8103
D0211	1437389-2	8123
D0211006	1437389-3	8123
D0212	1437389-4	8123
D021210	1437389-5	8123
D0213	1437389-6	8123
D0221	1437389-7	8123
D0222	1437389-8	8123
D0223	1437389-9	8123
D0511	1-1437389-8	8117
D0514	1-1437389-9	8117
D051512	4-1437391-4	8116
D0521	2-1437389-0	8117
D0525	2-1437389-1	8117
D061112-1	2-1437389-3	8111
D061126-1	2-1437389-4	8111
D0615	2-1437389-5	8107
D0625	2-1437389-6	8107
D0711	2-1437389-7	8109
D0714	2-1437389-8	8109
D0715	2-1437389-9	8109
D0724	3-1437389-0	8109
D0725	3-1437389-1	8109
D105	2-1437392-9	8102
D115	3-1437389-2	8102
D125	3-1437389-3	8102
D211	3-1437389-4	8123
D212	3-1437389-5	8123
D213	4-1437390-6	8123
D221	3-1437389-6	8123
D22104	3-1437389-7	8123
D222	3-1437389-8	8123
D223	3-1437389-9	8123
D511	4-1437389-6	8117
D514	4-1437389-7	8117
D515	4-1437389-8	8117
D521	4-1437389-9	8117
D525	5-1437389-0	8117
D614	5-1437389-1	8107
D615	5-1437389-2	8107
D714	5-1437389-3	8109
D715	5-1437389-4	8109
D721	5-1437389-5	8109
D724	5-1437389-6	8109
D725	5-1437389-7	8109
D814-BU	5-1437389-8	8128
D824	5-1437389-9	8128
DP0621	6-1437389-4	8107
DP0624	6-1437389-5	8107
DP062406	6-1437389-6	8111
DP062410	6-1437389-7	8111
DP0625	6-1437389-8	8107
DP0721	6-1437389-9	8109
DP0725	7-1437389-0	8109
DP125	7-1437389-1	8102
DP624	7-1437389-2	8107
DP721	7-1437389-3	8109
DP724	7-1437389-4	8109
E1	1437614-1	6067
F40	1437612-9	6070
F50	1-1437612-0	6070
FA0	1-1437612-1	6070
FACE-40	1437687-1	8082
FR0	1-1437612-2	6070
FSM100	1437565-2	6048
FSM101	1437565-3	6048
FSM1J	1-1437565-5	6046
FSM2J	2-1437565-0	6046
FSM3J	3-1437565-3	6046
FSM4J	3-1437565-6	6046
FSM5J	4-1437565-4	6046
FSM6J	4-1437565-5	6046
FSM7J	5-1437565-1	6046
FSM8J	5-1437565-2	6046
FSM9J	7-1437565-5	6046
FSM10J	1437565-7	6046
FSM11J	1437565-8	6046
FSM12J	1437565-9	6046
FSM13J	1-1437565-0	6046
FSM14J	1-1437565-2	6046
FSM16J	1-1437565-3	6046
FSM18J	1-1437565-4	6046
FSMRA1J	8-1437565-4	6047
FSMRA2J	8-1437565-5	6047
FSMRA3J	9-1437565-0	6047
FSMRA4J	9-1437565-1	6047
FSMRA5J	9-1437565-2	6047
FSMRA6J	9-1437565-3	6047
FSMRA7J	9-1437565-5	6047
G001	1437617-1	6074
G12KA	8-1437627-4	6062
G12KB	8-1437627-5	6062
G12KC	8-1437627-6	6062
G13A	8-1437627-7	6062

Products for Industrial & Commercial Applications

Dimensions are shown for reference purposes only.

Dimensions are in inches and millimeters unless otherwise specified. Values in brackets are metric equivalents.

Specifications subject to change.

Technical Support Center
1-800-522-6752
www.tycoelectronics.com

Acquired Part Number	Tyco Part Number	Page Number
G13B	8-1437627-8	6062
G13C	8-1437627-9	6062
G13KA	9-1437627-0	6062
G13KB	9-1437627-1	6062
G13KC	9-1437627-2	6062
G15	9-1437627-3	6062
J2-BU	3-1437392-2	8102
J10	3-1437392-1	8102
J7140	5-1437418-7	8118
J7240	5-1437418-8	8118
J7340	5-1437418-9	8118
K500A1/4	1437621-6	6078
K500A1/8	1437621-7	6078
K500B1/4	1437621-8	6078
K500B1/8	1437621-9	6078
K700A1/4	1-1437621-0	6078
K700B1/4	1-1437621-1	6078
K900A1/4	1-1437621-3	6078
K900B1/4	1-1437621-4	6078
K1250A1/4	1437621-2	6078
K1250B1/4	1437621-3	6079
K1251B1/4	1437621-4	6078
K1255BS1/4	1437621-5	6078
KA500A1/4	1-1437621-9	6078
KA500A1/8	2-1437621-0	6078
KA500B1/4	2-1437621-1	6078
KA500B1/8	2-1437621-2	6078
KA700A1/4	2-1437621-3	6078
KA700B1/4	2-1437621-4	6078
KA900A1/4	2-1437621-5	6078
KA900B1/4	2-1437621-6	6078
KA1250B1/4	1-1437621-8	6078
KAS500A1/4	2-1437621-7	6078
KAS500A1/8	2-1437621-8	6078
KAS500B1/4	2-1437621-9	6078
KAS500B1/8	3-1437621-0	6078
KAS700A1/4	3-1437621-1	6078
KAS700B1/4	3-1437621-2	6078
KAS900A1/4	3-1437621-3	6078
KAS900B1/4	3-1437621-4	6078
KB500A1/4	3-1437621-5	6079
KB500A1/8	3-1437621-6	6079
KB500B1/4	3-1437621-8	6079
KB500B1/8	3-1437621-9	6079
KB700A1/4	4-1437621-0	6079
KB700B1/4	4-1437621-2	6079
KB900A1/4	4-1437621-4	6079
KB900B1/4	4-1437621-5	6079
KBS500A101/8	4-1437621-9	6079
KBS500B101/4	5-1437621-2	6079
KBS500B101/8	5-1437621-3	6079
KCB500A1/4	5-1437621-6	6079
KCB500A1/8	5-1437621-7	6079
KCB500B1/4	5-1437621-8	6079
KCB500B1/8	5-1437621-9	6079
KCB600A1/8	6-1437621-0	6079
KCB600B1/4	6-1437621-1	6079
KCB600B1/8	6-1437621-2	6079
KCB700A1/4	6-1437621-3	6079
KCB700B1/4	6-1437621-4	6079
KCB900A1/4	6-1437621-5	6079
KCB900B1/4	6-1437621-7	6079
KD500A1/4	7-1437621-0	6080
KD500A1/8	7-1437621-1	6080
KD500B1/4	7-1437621-2	6080
KD500B1/8	7-1437621-3	6080
KD700A1/4	7-1437621-4	6080
KD700B1/4	7-1437621-5	6080
KD900A1/4	7-1437621-6	6080
KD900B1/4	7-1437621-7	6080
KD1250A1/4	6-1437621-8	6080
KD1250B1/4	6-1437621-9	6080
KE500AB1/4	7-1437621-9	6080
KE500AB1/8	8-1437621-0	6080
KE700AB1/4	8-1437621-1	6080
KE900AB1/4	8-1437621-2	6080
KE1250AB1/4	7-1437621-8	6080
KES500AB1/4	8-1437621-3	6080
KES500AB1/8	8-1437621-4	6080
KES700AB1/4	8-1437621-5	6080
KLNS500A1/4	1-1437622-5	6083
KLNS500A1/8	1-1437622-6	6082
KLNS500B1/4	1-1437622-7	6083
KLNS500B1/8	1-1437622-8	6083
KLNS700A1/4	2-1437622-0	6083
KLNS700B1/4	2-1437622-1	6082
KLNS900A1/4	2-1437622-2	6083
KLNS900B1/4	2-1437622-3	6083
KN500A1/4	4-1437622-2	6084
KN500A1/8	4-1437622-3	6084
KN500AB1/4	4-1437622-4	6084
KN500AB1/8	4-1437622-5	6084
KN500B1/4	4-1437622-6	6084
KN500B1/8	4-1437622-7	6084
KN500BA1/4	4-1437622-8	6084
KN500BA1/8	4-1437622-9	6084
KN501A1/4	5-1437622-0	6083
KN501A1/8	5-1437622-1	6083
KN501B1/4	5-1437622-2	6083
KN501B1/8	5-1437622-3	6083
KN501BA1/4	5-1437622-4	6083
KN501BA1/8	5-1437622-5	6083
KN5700A1/4	5-1437622-6	6084
KN5700B1/4	5-1437622-7	6084
KN700A1/4	5-1437622-8	6084
KN700AB1/4	5-1437622-9	6084
KN700B1/4	6-1437622-0	6084
KN700BA1/4	6-1437622-1	6084
KN701A1/4	6-1437622-2	6083
KN701B1/4	6-1437622-3	6083
KN701BA1/4	6-1437622-4	6083
KN701BA1/8	6-1437622-5	6083
KN900A1/4	6-1437622-6	6083
KN900AB1/4	6-1437622-7	6084
KN900B1/4	6-1437622-8	6083
KN900BA1/4	6-1437622-9	6084
KN1250AB1/4	2-1437622-6	6084
KN1250B1/4	2-1437622-7	6084
KN1250BA1/4	2-1437622-8	6084
KN1251A1/4	2-1437622-9	6084
KN1251B1/4	3-1437622-0	6084
KN1750B1/4	3-1437622-1	6083
KN1751A1/4	3-1437622-2	6082
KN1751AB1/4	3-1437622-3	6083
KN1751ABS1/4	3-1437622-4	6082
KN1751AS1/4	3-1437622-5	6083
KN1751BS1/4	3-1437622-8	6083
KN1755ABS1/4	3-1437622-9	6083
KN1755BAS1/4	4-1437622-0	6083
KN1755BS1/4	4-1437622-1	6084
KNS501A1/4	7-1437622-2	6084
KNS501A1/8	7-1437622-3	6084
KNS501B1/4	7-1437622-4	6084
KNS501B1/8	7-1437622-5	6084
KNS501BA1/4	7-1437622-6	6084
KNS501BA1/8	7-1437622-7	6084
KNS701A1/4	7-1437622-8	6084
KNS701B1/4	7-1437622-9	6084
KNS701BA1/4	8-1437622-0	6084
KNS701BA1/8	8-1437622-1	6084
KPN500A1/4	9-1437622-0	6084
KPN500A1/8	9-1437622-1	6084
KPN500B1/4	9-1437622-2	6084
KPN500B1/8	9-1437622-3	6084
KPN700A1/4	9-1437622-5	6084
KPN700B1/4	9-1437622-6	6084
KPN900A1/4	9-1437622-7	6084
KPN900B1/4	9-1437622-9	6084
KS500A1/4	1437623-2	6084
KS500A1/8	1437623-3	6084
KS500B1/4	1437623-4	6084
KS500B1/8	1437623-5	6084
KS700A1/4	1437623-6	6084
KS700B1/4	1437623-7	6084
KS900A1/4	1437623-8	6084
KS900B1/4	1437623-9	6084
KT500A1/4	1-1437623-2	6085
KT500B1/4	1-1437623-3	6085
KT500B1/8	1-1437623-4	6085
KT700A1/4	1-1437623-6	6085
KT700B1/4	1-1437623-7	6085
KT900A1/4	1-1437623-8	6085
KT900B1/4	1-1437623-9	6085
KU401B1/8	2-1437623-1	6085
KU402B1/8	2-1437623-2	6085
KU500B1/8	2-1437623-3	6085
KU700B1/4	2-1437623-4	6085
KUS402B1/8	2-1437623-9	6085
KUS500B1/8	3-1437623-0	6085
KUS700B1/4	3-1437623-1	6085
M6200	2-1437610-2	6074
M6201	2-1437610-3	6074
M6202	2-1437610-4	6074
M6210	2-1437610-5	6074
M6250	2-1437610-6	6074
M6270	2-1437610-7	6074
M6280	2-1437610-8	6074
M60532	1437610-6	6072
M60582	1-1437610-2	6072
M60652	1-1437610-3	6072
M65310	3-1437610-5	6073
M65510	3-1437610-6	6073
M65810	3-1437610-7	6073
M8058-1G18	5-1437508-3	5068
M8058-1G19	5-1437508-4	5068
M8058-1G22	5-1437508-5	5068
M8058-1G23	5-1437508-6	5068
M8058-1G24	5-1437508-7	5068
M8058-1G29	5-1437508-8	5068
M8058-1G31	5-1437508-9	5068
M8058-1G32	6-1437508-0	5068
M8058-1G33	6-1437508-1	5068
M8058-1G91	6-1437508-2	5068
M8058-45G2	6-1437508-3	5068
MB6-P106-24	5-1437663-1	8050, 8061, 8062
MB6-P107-02	1437663-5	8050, 8061, 8062
MB6-P107-04	1437663-6	8050, 8061, 8062
MB6-P107-06	1437663-7	8050, 8061, 8062
MB6-P107-08	1437663-8	8050, 8061, 8062
MB6-P107-10	1437663-9	8050, 8061, 8062
MB6-P107-12	1-1437663-0	8050, 8061, 8062
MB6-P107-14	1-1437663-1	8050, 8061, 8062
MB6-P107-16	1-1437663-2	8050, 8061, 8062
MB6-P107-18	1-1437663-4	8050, 8061, 8062
MB6-P107-20	1-1437663-5	8050, 8061, 8062
MB6-P107-22	1-1437663-6	8050, 8061, 8062
MB6-P107-24	1-1437663-7	8050, 8061, 8062
MB6-P107-26	1-1437663-8	8050, 8061, 8062
MB6-P107-28	1-1437663-9	8050, 8061, 8062
MB6-P107-30	2-1437663-0	8050, 8061, 8062
MB6-P107-32	2-1437663-2	8050, 8061, 8062
MB6-P107-34	2-1437663-3	8050, 8061, 8062
MB6-P107-36	2-1437663-4	8050, 8061, 8062
MB6-P107-38	2-1437663-5	8050, 8061, 8062
MB6-P107-40	2-1437663-6	8050, 8061, 8062
MB6-P107-46	2-1437663-7	8050, 8061, 8062
MB6-P108-04	2-1437663-8	8050, 8061, 8062
MB6-P108-06	2-1437663-9	8050, 8061, 8062
MB6-P108-08	3-1437663-0	8050, 8061, 8062
MB6-P108-10	3-1437663-1	8050, 8061, 8062
MB6-P108-12	3-1437663-2	8050, 8061, 8062
MB6-P108-14	3-1437663-3	8050, 8061, 8062
MB6-P108-16	3-1437663-4	8050, 8061, 8062
MB6-P108-18	3-1437663-5	8050, 8061, 8062
MB6-P108-20	3-1437663-6	8050, 8061, 8062
MB6-P108-22	3-1437663-7	8050, 8061, 8062
MB6-P108-24	3-1437663-8	8050, 8061, 8062
MB6-P108-24	3-1437663-8	8050, 8061, 8062
MB6-P108-26	4-1437663-0	8050, 8061, 8062
MB6-P108-28	4-1437663-1	8050, 8061, 8062
MB6-P108-30	4-1437663-2	8050, 8061, 8062
MB6-P108-32	4-1437663-3	8050, 8061, 8062
MB6-P108-34	4-1437663-4	8050, 8061, 8062
MB6-P108-36	4-1437663-5	8050, 8061, 8062

Products for Industrial & Commercial Applications

Dimensions are shown for reference purposes only.

Dimensions are in inches and millimeters unless otherwise specified. Values in brackets are metric equivalents.

Specifications subject to change.

Technical Support Center
1-800-522-6752
www.tycoelectronics.com

Acquired Part Number	Tyco Part Number	Page Number
MB6-P108-38	4-1437663-6	8050, 8061, 8062
MB6-P108-40	4-1437663-7	8050, 8061, 8062
MB6-P108-50	4-1437663-8	8050, 8061, 8062
MB6-P108-60	4-1437663-9	8050, 8061, 8062
MHS122	1437576-9	6020
MHS122G	1-1437576-0	6020
MHS122GRA	1-1437576-1	6021
MHS122K	1-1437576-2	6020
MHS122KG	1-1437576-3	6020
MHS122RA	1-1437576-4	6021
MHS123	1-1437576-5	6020
MHS123GRA	1-1437576-6	6021
MHS123K	1-1437576-7	6020
MHS123RA	1-1437576-8	6021
MHS133	1-1437576-9	6020
MHS133G	2-1437576-0	6020
MHS133GRA	2-1437576-1	6021
MHS133K	2-1437576-2	6020
MHS133KG	2-1437576-3	6020
MHS133RA	2-1437576-4	6021
MHS222	2-1437576-5	6020
MHS222G	2-1437576-6	6020
MHS222GRA	2-1437576-7	6021
MHS222K	2-1437576-8	6020
MHS222KG	2-1437576-9	6020
MHS222RA	3-1437576-0	6021
MHS223	3-1437576-1	6020
MHS223GRA	3-1437576-3	6021
MHS223K	3-1437576-4	6020
MHS223RA	3-1437576-5	6021
MHS233	3-1437576-6	6020
MHS233RA	4-1437576-1	6021
MHS433	4-1437576-2	6020
MHS433RA	4-1437576-3	6021
MMS12	1437575-4	6023
MMS22	1437575-5	6023
MMS22R	1437575-6	6023
MPG106D	4-1437567-9	6058
MPG106F	5-1437567-0	6058
MPG206N	5-1437567-1	6058
MPG206NPC	5-1437567-2	6058
MPG206R	5-1437567-3	6058
MPG206RPC	5-1437567-4	6058
MPG306D	5-1437567-5	6058
MPG306F	5-1437567-6	6058
MPG406N	5-1437567-7	6058
MPG406R	5-1437567-8	6058
MPS103D	5-1437567-9	6059
MPS103DPC	6-1437567-0	6060
MPS103DPCV	6-1437567-1	6060
MPS103DRA	6-1437567-2	6061
MPS103F	6-1437567-3	6059
MPS103FPC	6-1437567-4	6060
MPS103FPCV	6-1437567-5	6060
MPS103FRA	6-1437567-6	6061
MPS103FWW	6-1437567-7	6060
MPS203N	6-1437567-8	6059
MPS203NPC	6-1437567-9	6060
MPS203NRA	7-1437567-1	6061
MPS203R	7-1437567-2	6059
MPS203RPC	7-1437567-3	6060
MPS203RPCV	7-1437567-4	6060
MPS203RRA	7-1437567-5	6061
MPS203RWW	7-1437567-6	6060
MPSN103F	8-1437567-0	6059
MPSR103F	8-1437567-1	6059
MPSR203R	8-1437567-2	6059
MSP103B	8-1437567-3	6061
MSP103C	8-1437567-4	6061
MSP103C0	8-1437567-5	6061
MSP103C2	8-1437567-6	6061
MSPS103B	1437568-5	6061
MSPS103C	1437568-6	6061
MSPS103C0	1437568-7	6061
MTA106D	1-1437558-0	6038
MTA106DPC	1-1437558-1	6039
MTA106E	1-1437558-2	6038
MTA106EPC	1-1437558-3	6039
MTA106FPC	1-1437558-5	6039
MTA106FVRA	8-1437592-1	6045
MTA106G	1-1437558-6	6038
MTA106GPC	1-1437558-7	6039
MTA106H	1-1437558-8	6038
MTA106HPC	1-1437558-9	6039
MTA206N	2-1437558-0	6038
MTA206NPC	2-1437558-1	6039
MTA206P	2-1437558-2	6038
MTA206PA	2-1437558-3	6038
MTA206PAPC	2-1437558-4	6039
MTA206PPC	2-1437558-5	6039
MTA206PVRA	2-1437558-6	6045
MTA206R	2-1437558-7	6038
MTA206RPC	2-1437558-8	6039
MTA206S	2-1437558-9	6038
MTA206SA	3-1437558-0	6038
MTA206SPC	3-1437558-1	6039
MTA206T	3-1437558-2	6038
MTA206TA	3-1437558-3	6038
MTA206TPC	3-1437558-4	6039
MTA306D	3-1437558-5	6038
MTA306DPC	3-1437558-6	6039
MTA306E	3-1437558-7	6038
MTA306EPC	3-1437558-8	6039
MTA306F	3-1437558-9	6038
MTA306FPC	4-1437558-0	6039
MTA306H	4-1437558-1	6038
MTA306HPC	4-1437558-2	6039
MTA406NPC	4-1437558-4	6039
MTA406P	4-1437558-5	6038
MTA406PA	4-1437558-6	6038
MTA406PAPC	4-1437558-7	6039
MTA406PPC	4-1437558-8	6039
MTA8106DRA	5-1437558-0	6044
MTA8106DVRA	5-1437558-1	6045
MTA8206NRA	5-1437558-6	6044
MTA8206NVRA	5-1437558-7	6045
MTA8206PRA	5-1437558-9	6044
MTA8206PVRA	6-1437558-0	6045
MTG106D	1-1437559-1	6040
MTG106E	1-1437559-2	6040
MTG106F	1-1437559-3	6040
MTG106G	1-1437559-4	6040
MTG106H	1-1437559-5	6040
MTG126D	1-1437559-6	6041
MTG126E	1-1437559-7	6041
MTG206N	1-1437559-8	6040
MTG206P	2-1437559-0	6040
MTG206PA	2-1437559-1	6040
MTG206R	2-1437559-2	6040
MTG206S	2-1437559-3	6040
MTG206T	2-1437559-4	6040
MTG226N	2-1437559-5	6041
MTG226P	2-1437559-6	6041
MTG226PA	2-1437559-7	6041
MTG306D	2-1437559-8	6040
MTG306E	2-1437559-9	6040
MTG326D	3-1437559-0	6041
MTG406N	3-1437559-1	6040
MTG406P	3-1437559-2	6040
MTG426N	3-1437559-3	6041
MTL106D	3-1437559-4	6042
MTL106E	3-1437559-5	6042
MTL206N	3-1437559-7	6042
MTL206P	3-1437559-9	6042
MTL206PA	4-1437559-0	6042
MTL206S	4-1437559-1	6042
MTL306D	4-1437559-2	6042
MTL406N	4-1437559-4	6042
MTL406PA	4-1437559-5	6042
MTM106DPC	4-1437559-6	6043
MTM106EPC	4-1437559-7	6043
MTM106FPC	4-1437559-8	6043
MTM206NPC	4-1437559-9	6043
MTM206PAPC	5-1437559-0	6043
MTM206SPC	5-1437559-2	6043
MTM306DPC	5-1437559-3	6043
MTM406NPC	5-1437559-4	6043
MTM8106DRA	5-1437559-6	6044
MTM8106DVRA	5-1437559-7	6045
MTM8106ERA	5-1437559-8	6044
MTM8106EVRA	5-1437559-9	6045
MTM8206NRA	6-1437559-0	6044
NC6-P102-02	6-1437664-4	8051, 8068, 8089
NC6-P102-04	1437664-3	8051, 8068, 8069
NC6-P102-12	6-1437664-3	8051, 8068, 8069
NC6-P104-14	1437656-6	8051, 8068, 8069
NC6-P106-04	6-1437664-2	8051, 8068, 8069
NC6-P107-02	1437664-4	8051, 8068, 8069
NC6-P107-03	1437664-5	8051, 8068, 8069
NC6-P107-04	1437664-6	8051, 8068, 8069
NC6-P107-05	1437664-7	8051, 8068, 8069
NC6-P107-06	1437664-9	8051, 8068, 8069
NC6-P107-07	1-1437664-0	8051, 8068, 8069
NC6-P107-08	1-1437664-1	8051, 8068, 8069
NC6-P107-09	1-1437664-3	8051, 8068, 8069
NC6-P107-10	1-1437664-4	8051, 8068, 8069
NC6-P107-11	1-1437664-6	8051, 8068, 8069
NC6-P107-12	1-1437664-7	8051, 8068, 8069
NC6-P107-13	1-1437664-8	8051, 8068, 8069
NC6-P107-14	2-1437664-0	8051, 8068, 8069
NC6-P107-15	2-1437664-1	8051, 8068, 8069
NC6-P107-16	2-1437664-2	8051, 8068, 8069
NC6-P107-17	2-1437664-3	8051, 8068, 8069
NC6-P107-20	2-1437664-5	8051, 8068, 8069
NC6-P107-22	2-1437664-6	8051, 8068, 8069
NC6-P107-24	2-1437664-7	8051, 8068, 8069
NC6-P107-25	2-1437664-8	8051, 8068, 8069
NC6-P108-02	3-1437664-0	8051, 8068, 8069
NC6-P108-03	3-1437664-1	8051, 8068, 8069
NC6-P108-04	3-1437664-3	8051, 8068, 8069
NC6-P108-05	3-1437664-5	8051, 8068, 8069
NC6-P108-06	3-1437664-8	8051, 8068, 8069
NC6-P108-06-049	3-1437664-9	8051, 8068, 8069
NC6-P108-07	4-1437664-0	8051, 8068, 8069
NC6-P108-08	4-1437664-1	8051, 8068, 8069
NC6-P108-09	4-1437664-2	8051, 8068, 8069
NC6-P108-10	4-1437664-4	8051, 8068, 8069
NC6-P108-11	4-1437664-6	8051, 8068, 8069
NC6-P108-12	4-1437664-7	8051, 8068, 8069
NC6-P108-13	4-1437664-8	8051, 8068, 8069
NC6-P108-14	4-1437664-9	8051, 8068, 8069
NC6-P108-15	5-1437664-0	8051, 8068, 8069
NC6-P108-16	5-1437664-1	8051, 8068, 8069
NC6-P108-17	5-1437664-2	8051, 8068, 8069
NC6-P108-18	5-1437664-3	8051, 8068, 8069
NC6-P108-19	5-1437664-4	8051, 8068, 8069
NC6-P108-20	5-1437664-5	8051, 8068, 8069
NC6-P108-22	5-1437664-6	8051, 8068, 8069
NC6-P108-24	5-1437664-7	8051, 8068, 8069
P0621	6-1437393-2	8106
P0624	6-1437393-3	8106
P0625	6-1437393-4	8106
P0630	6-1437393-7	8106
P0721	4-1437394-8	8108
P0724	5-1437394-0	8108
P0725	5-1437394-1	8109
P0727	5-1437394-3	8109
P0728	5-1437394-4	8108
P012510	4-1437392-6	8103
P062512	6-1437393-5	8111
P062525	6-1437393-6	8111
P062530	5-1437391-3	8111
P072130-1	4-1437394-9	8111
P072506	5-1437394-2	8111
P125	4-1437392-7	8102
P130	4-1437392-9	8102
P621	6-1437393-8	8106
P624	6-1437393-9	8106
P625	7-1437393-0	8106
P628	7-1437393-2	8106
P630	7-1437393-3	8106
P721	5-1437394-6	8108
P724	5-1437394-7	8108
P725	5-1437394-8	8109

Products for Industrial & Commercial Applications

Dimensions are shown for reference purposes only.

Dimensions are in inches and millimeters unless otherwise specified. Values in brackets are metric equivalents.

Specifications subject to change.

Technical Support Center
1-800-522-6752
www.tycoelectronics.com

Acquired Part Number	Tyco Part Number	Page Number
P728	6-1437394-0	8108
P62510	7-1437393-1	8111
PCB1A12A	1437410-8	8078
PCB1A12S	1437410-9	8078
PCB1A18A	1-1437410-0	8078
PCB1A18S	1-1437410-1	8078
PCB1A24A	1-1437410-2	8078
PCB1A24S	1-1437410-3	8078
PCB1A30A	1-1437410-4	8078
PCB1A30S	1-1437410-5	8078
PCB1A36A	1-1437410-6	8078
PCB1A36S	1-1437410-7	8078
PCB1B06S	1-1437410-8	8079
PCB1B08AG	1-1437410-9	8079
PCB1B08S	2-1437410-0	8079
PCB1B10A	2-1437410-1	8079
PCB1B10AG	2-1437410-2	8079
PCB1B10S	2-1437410-3	8079
PCB1B10SG	2-1437410-4	8079
PCB1B12A	2-1437410-5	8079
PCB1B12AG	2-1437410-6	8079
PCB1B12S	2-1437410-7	8079
PCB1B12SG	2-1437410-8	8079
PCB1B15A	2-1437410-9	8079
PCB1B15AG	3-1437410-0	8079
PCB1B15S	3-1437410-1	8079
PCB1B16AG	3-1437410-2	8079
PCB1B16SG	3-1437410-3	8079
PCB1B18A	3-1437410-4	8079
PCB1B18AG	3-1437410-5	8079
PCB1B18S	3-1437410-6	8079
PCB1B18SG	3-1437410-7	8079
PCB1B22A	3-1437410-8	8079
PCB1B22AG	3-1437410-9	8079
PCB1B22S	4-1437410-0	8079
PCB1B22SG	4-1437410-1	8079
PCB1B28A	4-1437410-2	8079
PCB1B28AG	4-1437410-3	8079
PCB1B28S	4-1437410-4	8079
PCB1B28SG	4-1437410-5	8079
PCB1B30SG	4-1437410-6	8079
PCB1B32A	4-1437410-7	8079
PCB1B32AG	4-1437410-8	8079
PCB1B32S	4-1437410-9	8079
PCB1B32SG	5-1437410-0	8079
PCB1B36A	5-1437410-1	8079
PCB1B36AG	5-1437410-2	8079
PCB1B36S	5-1437410-3	8079
PCB1B36SG	5-1437410-4	8079
PCB1B43A	5-1437410-5	8079
PCB1B43AG	5-1437410-6	8079
PCB1B43S	5-1437410-7	8079
PCB1B43SG	5-1437410-8	8079
PCB2B06A	5-1437410-9	8080
PCB2B06S	6-1437410-1	8080
PCB2B08A	6-1437410-2	8080
PCB2B08S	6-1437410-3	8080
PCB2B09S	6-1437410-4	8080
PCB2B10A	6-1437410-5	8080
PCB2B10S	6-1437410-6	8080
PCB2B12A	6-1437410-7	8080
PCB2B12S	6-1437410-8	8080
PCB2B15A	6-1437410-9	8080
PCB2B15S	7-1437410-0	8080
PCB2B16A	7-1437410-1	8080
PCB2B16S	7-1437410-2	8080
PCB2B18A	7-1437410-3	8080
PCB2B18S	7-1437410-4	8080
PCB2B22A	7-1437410-5	8080
PCB2B22S	7-1437410-6	8080
PCB2B24A	7-1437410-7	8080
PCB2B28A	7-1437410-8	8080
PCB2B28S	7-1437410-9	8080
PCB2B30A	8-1437410-0	8080
PCB2B30S	8-1437410-1	8080
PCB2B36A	8-1437410-2	8080
PCB2B36S	8-1437410-3	8080
PCB2B43A	8-1437410-4	8080
PCB2B43S	8-1437410-5	8080
PCB3A06A	8-1437410-7	8081
PCB3A06S	8-1437410-8	8081
PCB3A08A	8-1437410-9	8081
PCB3A08S	9-1437410-0	8081
PCB3A10A	9-1437410-1	8081
PCB3A10S	9-1437410-2	8081
PCB3A12A	9-1437410-3	8081
PCB3A12S	9-1437410-4	8081
PCB3A15A	9-1437410-5	8081
PCB3A15S	9-1437410-6	8081
PCB3A16A	9-1437410-7	8081
PCB3A16S	9-1437410-8	8081
PCB3A18A	9-1437410-9	8081
PCB3A18A617415	1437411-1	8081
PCB3A18S	1437411-2	8081
PCB3A22A	1437411-3	8081
PCB3A22S	1437411-4	8081
PCB3A24A	1437411-5	8081
PCB3A24S	1437411-6	8081
PCB3A30A	1437411-7	8081
PCB3A30S	1437411-8	8081
PCB3A32A	1437411-9	8081
PCB3A32S	1-1437411-0	8081
PCB3A36A	1-1437411-1	8081
PCB3A36A617207	1-1437411-2	8081
PCB3A36S	1-1437411-3	8081
PCB3A44A	1-1437411-4	8081
PH14171/4	1437624-1	6086
PH15181/4	1437624-2	6086
PK1100B1/4	1437624-3	6086
PK1100B1/8	1437624-4	6086
PK1108B1/4	1437624-5	6086
PK50B1/4	1437624-6	6086
PK50B1/8	1437624-7	6086
PK70B1/4	1437624-8	6086
PK90B1/4	1437624-9	6086
PKA50B1/4	1-1437624-0	6087
PKA50B1/8	1-1437624-1	6087
PKA55B1/8	1-1437624-4	6087
PKA70B1/4	1-1437624-5	6087
PKA90B1/4	1-1437624-7	6087
PKAP50B1/4	1-1437624-8	6087
PKAP50B1/8	1-1437624-9	6087
PKAP70B1/4	2-1437624-0	6087
PKAP90B1/4	2-1437624-2	6087
PKB70B1/4	2-1437624-3	6088
PKB90B1/4	2-1437624-4	6088
PKD100B1/4	2-1437624-5	6088
PKD100B101/4	2-1437624-6	6088
PKD60B1/4	2-1437624-7	6088
PKD60B1/8	2-1437624-8	6088
PKD60B101/4	2-1437624-9	6088
PKD60B101/8	3-1437624-0	6088
PKD70B1/4	3-1437624-1	6088
PKD70B101/4	3-1437624-2	6088
PKDT100B1/4	3-1437624-3	6089
PKDT100B101/4	3-1437624-4	6089
PKDT60B1/4	3-1437624-5	6089
PKDT60B1/8	3-1437624-6	6089
PKDT60B101/4	3-1437624-7	6089
PKDT60B101/8	3-1437624-8	6089
PKDT70B1/4	3-1437624-9	6089
PKDT70B101/4	4-1437624-0	6089
PKE60B1/4	4-1437624-3	6089
PKE60B1/8	4-1437624-4	6089
PKE90B1/4	4-1437624-5	6089
PKES60B1/4	5-1437624-0	6089
PKES60B1/8	5-1437624-1	6089
PKES70B1/4	5-1437624-2	6089
PKES90B1/4	5-1437624-3	6089
PKES120B1/4	4-1437624-6	6089
PKES140B1/4	4-1437624-7	6089
PKES150B1/4	4-1437624-8	6089
PKF50B1/4	5-1437624-4	6090
PKF50B1/8	5-1437624-5	6090
PKF70B1/4	5-1437624-6	6090
PKG40B1/8	5-1437624-9	6090
PKG50B1/4	6-1437624-0	6090
PKG50B1/8	6-1437624-1	6090
PKG60B1/4	6-1437624-5	6091
PKG60B1/8	6-1437624-6	6091
PKG70B1/4	6-1437624-7	6091
PKG70B1/8	6-1437624-8	6091
PKG90B1/4	6-1437624-9	6091
PKG90B1/8	7-1437624-0	6091
PKGP70B1/4	7-1437624-2	6091
PKGP90B1/4	7-1437624-3	6091
PKGP100B1/4	7-1437624-1	6091
PKJ50B1/4	7-1437624-4	6091
PKJ50B1/8	7-1437624-5	6091
PKJ60B1/4	7-1437624-6	6091
PKJ70B1/4	7-1437624-7	6091
PKJT50B1/4	7-1437624-8	6092
PKJT50B1/8	7-1437624-9	6092
PKJT60B1/4	8-1437624-0	6092
PKJT70B1/4	8-1437624-1	6092
PKN60B1/8	8-1437624-2	6092
PKN70B1/4	8-1437624-3	6092
PKN90B1/4	8-1437624-4	6092
PKNT60B1/4	8-1437624-5	6092
PKNT60B1/8	8-1437624-6	6092
PKNT70B1/4	8-1437624-7	6092
PKNT90B1/4	8-1437624-8	6092
PKP194B1/4	9-1437624-0	6087
PKR125B1/4	9-1437624-1	6092
PKR175B1/4	9-1437624-2	6092
PKS1104B1/4	9-1437624-5	6093
PKS1105B101/4	9-1437624-6	6093
PKS1106B1/4	9-1437624-7	6093
PKS1132B1/4	9-1437624-8	6093
PKS1132B101/4	9-1437624-9	6093
PKS1132B51/4	1437625-1	6093
PKS1132B91/4	1437625-2	6093
PKS90B1/4	1437625-5	6094
PKS90B101/4	1437625-6	6094
PKT60B1/4	1437625-8	6086
PKT60B1/8	1437625-9	6086
PKT70B1/4	1-1437625-0	6086
PKT100B1/4	1437625-7	6086
PKX100B1/4	1-1437625-1	6094
PKX110B1/4	1-1437625-2	6094
PKX130B1/4	1-1437625-3	6094
PKX50B1/4	1-1437625-4	6094
PKX50B1/8	1-1437625-5	6094
PKX60B1/4	1-1437625-6	6094
PKX60B1/8	1-1437625-7	6094
PKX80B1/4	1-1437625-8	6094
QT01201	1-1437614-9	6066
RB1-AG	2-1437683-3	8086
RB4-AG	2-1437683-5	8086
RB5-AG	2-1437683-6	8086
RM0450	3-1437614-4	6066
RM0452	3-1437614-5	6066
RM0500	3-1437614-6	6066
RM0502	3-1437614-7	6066
RM0532	3-1437614-8	6066
RM0552	3-1437614-9	6066
RM0652	4-1437614-0	6066
RM200	5-1437614-4	6067
RM201	5-1437614-5	6067
RM204	5-1437614-6	6067
RM205	5-1437614-7	6067
RM210	5-1437614-8	6068
RM220	5-1437614-9	6068
RM222	6-1437614-0	6068
RM230	6-1437614-1	6068
RM232	6-1437614-2	6068
RM233	6-1437614-3	6068
RM243	6-1437614-4	6068
RM250	6-1437614-5	6067
RM270	6-1437614-6	6068
RM272	6-1437614-7	6068
RM273	6-1437614-8	6068
RM280	6-1437614-9	6068
RM1652	5-1437614-3	6068

Products for Industrial & Commercial Applications

Dimensions are shown for reference purposes only.

Dimensions are in inches and millimeters unless otherwise specified. Values in brackets are metric equivalents.

Specifications subject to change.

Technical Support Center
1-800-522-6752
www.tycoelectronics.com

Acquired Part Number	Tyco Part Number	Page Number
RM3040	7-1437614-0	6067
RM3100	7-1437614-1	6067
RM3120	7-1437614-2	6067
RM3130	7-1437614-3	6067
RM4040	7-1437614-7	6067
RM4100	7-1437614-8	6067
RSB6B02S	1437407-3	8051, 8076
RSB6B03S	1437407-4	8051, 8076
RSB6B04S	1437407-5	8051, 8076
RSB6B06S	1437407-6	8051, 8076
RSB6B10S	1437407-7	8051, 8076
RSB6BB3S	1437407-8	8051, 8076
RT0500	1437615-1	6066
RT0502	1437615-2	6066
S520-AG11D	1-1437534-8	5009
S524-AG11D	1-1437534-9	5009
S528-AG11D	2-1437534-0	5009
SE1DGPC	1437574-9	6013
SE1DGRA	1-1437574-1	6013
SE1EGPC	1-1437574-4	6013
SE1EGRA	1-1437574-5	6013
SE2DGPC	1-1437574-6	6013
SE2DGRA	1-1437574-8	6013
SE2EGPC	2-1437574-0	6013
SE2EGRA	2-1437574-1	6013
SL330	1-1437577-0	6027
SL550	1-1437577-1	6027
SL660	1-1437577-2	6027
SL770	1-1437577-3	6027
SL880	1-1437577-4	6027
SLS120	1-1437577-5	6027
SLS121	1-1437577-7	6026
SLS121PC	1-1437577-9	6029
SLS121RA	2-1437577-2	6029
SLS131PC	2-1437577-4	6030
SLS131RA	2-1437577-6	6030
SLS141PC	2-1437577-8	6030
SLS141RA	3-1437577-0	6030
SLS151PC	3-1437577-2	6030
SLS151RA	3-1437577-4	6030
SLS220	3-1437577-7	6030
SLS240PCA	4-1437577-3	6027
SLS1201	1-1437577-6	6027
SLS1211	1-1437577-8	6028
SLS2201	3-1437577-8	6026
SLSA120	5-1437577-3	6027
SLSA1201	5-1437577-4	6027
SLSA220	5-1437577-5	6026
SLSA2201	5-1437577-6	6028
SM2V02	2-1437405-1	8047
SM2V02	5-2143740-1	8047
SMC2402	1-1437686-8	8047
SPS121151RG	1-1437630-8	6028
SR601	1-1437615-2	6068
SSA12	1-1437575-4	6025
SSA12G	1-1437575-5	6025
SSA22	1-1437575-6	6025
SSA22G	1-1437575-7	6025
SSB12	1-1437575-8	6024
SSB12G	1-1437575-9	6024
SSB12R	2-1437575-0	6024
SSB12RG	2-1437575-1	6024
SSB22	2-1437575-2	6024
SSB22G	2-1437575-3	6024
SSB22R	2-1437575-4	6024
SSB22RG	2-1437575-5	6024
SSB42	2-1437575-8	6024
SSB42G	2-1437575-9	6024
SSB7CE04030	6-1437415-3	8051, 8070, 8071
SSB7CF130300	6-1437415-4	8051, 8070, 8071
SSB7CG020326	6-1437415-5	8051, 8070, 8071
SSB7CG050301	6-1437415-6	8051, 8070, 8071
SSB7CG050304	6-1437415-7	8051, 8070, 8071
SSB7CG05030411	6-1437415-8	8051, 8070, 8071
SSB7CG050326	7-1437415-0	8051, 8070, 8071
SSB7CG060302	7-1437415-2	8051, 8070, 8071
SSB7CG090301	7-1437415-3	8051, 8070, 8071
SSB7CG090304	7-1437415-4	8051, 8070, 8071
SSB7CG09032224	7-1437415-5	8051, 8070, 8071
SSB7CG140301	7-1437415-6	8051, 8070, 8071
SSB7CG160304	7-1437415-7	8051, 8070, 8071
SSB7FE020202	7-1437415-8	8051, 8070, 8071
SSB7FE030501	7-1437415-9	8051, 8070, 8071
SSB7FE060704	1-796602-7	8051, 8070, 8071
SSB7FE140204	8-1437415-0	8051, 8070, 8071
SSB7FE180501	8-1437415-1	8051, 8070, 8071
SSB7FF030101	8-1437415-2	8051, 8070, 8071
SSB7FF041503	8-1437415-3	8051, 8070, 8071
SSB7FF101501	8-1437415-4	8051, 8070, 8071
SSB7FG020209	8-1437415-5	8051, 8070, 8071
SSB7FG030103	8-1437415-6	8051, 8070, 8071
SSB7FG050103	8-1437415-7	8051, 8070, 8071
SSB7FG050202	8-1437415-8	8051, 8070, 8071
SSB7FG060701	8-1437415-9	8051, 8070, 8071
SSB7FG080201	9-1437415-0	8051, 8070, 8071
SSB7FG150202	9-1437415-1	8051, 8070, 8071
SSB7FG160201	9-1437415-2	8051, 8070, 8071
SSB7FM030201	9-1437415-3	8051, 8070, 8071
SSB7FM030202	9-1437415-4	8051, 8070, 8071
SSB7FM060201	9-1437415-5	8051, 8070, 8071
SSB7FM06020211	9-1437415-6	8051, 8070, 8071
SSB7FM070602	9-1437415-7	8051, 8070, 8071
SSB7FM081301	9-1437415-8	8051, 8070, 8071
SSB7FM090201	1437416-1	8051, 8070, 8071
SSB7FP020201	1437416-2	8051, 8070, 8071
SSB7FP02020111	1437416-3	8051, 8070, 8071
SSB7FP020202	1437416-4	8051, 8070, 8071
SSB7FP020203	1437416-5	8051, 8070, 8071
SSB7FP030201	1437416-6	8051, 8070, 8071
SSB7FP030202	1437416-8	8051, 8070, 8071
SSB7FP030203	1437416-9	8051, 8070, 8071
SSB7FP040200	1-1437416-0	8051, 8070, 8071
SSB7FP040201	1-1437416-1	8051, 8070, 8071
SSB7FP040202	1-1437416-2	8051, 8070, 8071
SSB7FP040203NNN	1-1437416-3	8051, 8070, 8071
SSB7FP040401	1-1437416-4	8051, 8070, 8071
SSB7FP050201	1-1437416-5	8051, 8070, 8071
SSB7FP05020111	1-1437416-6	8051, 8070, 8071
SSB7FP050202	1-1437416-7	8051, 8070, 8071
SSB7FP050203	1-1437416-8	8051, 8070, 8071
SSB7FP050402	1-1437416-9	8051, 8070, 8071
SSB7FP060200	2-1437416-0	8051, 8070, 8071
SSB7FP060201	2-1437416-1	8051, 8070, 8071
SSB7FP060202	2-1437416-2	8051, 8070, 8071
SSB7FP060203	2-1437416-3	8051, 8070, 8071
SSB7FP070201	2-1437416-4	8051, 8070, 8071
SSB7FP07020111	2-1437416-5	8051, 8070, 8071
SSB7FP070203	2-1437416-6	8051, 8070, 8071
SSB7FP080101	2-1437416-7	8051, 8070, 8071
SSB7FP080202	2-1437416-8	8051, 8070, 8071
SSB7FP080203	2-1437416-9	8051, 8070, 8071
SSB7FP080204	3-1437416-0	8051, 8070, 8071
SSB7FP080401	3-1437416-1	8051, 8070, 8071
SSB7FP090202	3-1437416-2	8051, 8070, 8071
SSB7FP090401	3-1437416-3	8051, 8070, 8071
SSB7FP100201	3-1437416-4	8051, 8070, 8071
SSB7FP100202	3-1437416-5	8051, 8070, 8071
SSB7FP100203	3-1437416-6	8051, 8070, 8071
SSB7FP100280	3-1437416-7	8051, 8070, 8071
SSB7FP110200	3-1437416-8	8051, 8070, 8071
SSB7FP110203	3-1437416-9	8051, 8070, 8071
SSB7FP120201	4-1437416-0	8051, 8070, 8071
SSB7FP120202	4-1437416-1	8051, 8070, 8071
SSB7FP120203	4-1437416-2	8051, 8070, 8071
SSB7FP130201	4-1437416-3	8051, 8070, 8071
SSB7FP140102	4-1437416-4	8051, 8070, 8071
SSB7FP140201	4-1437416-5	8051, 8070, 8071
SSB7FP140203	1-796602-6	8051, 8070, 8071
SSB7FP150201	4-1437416-6	8051, 8070, 8071
SSB7FP150202	4-1437416-7	8051, 8070, 8071
SSB7FP150203	4-1437416-8	8051, 8070, 8071
SSB7FP150902	4-1437416-9	8051, 8070, 8071
SSB7FP170202	5-1437416-0	8051, 8070, 8071
SSB7FP18020212	5-1437416-1	8051, 8070, 8071
SSB7FP200202	5-1437416-2	8051, 8070, 8071
SSB7FP250202	5-1437416-3	8051, 8070, 8071
SSB7FP260202	5-1437416-4	8051, 8070, 8071
SSB7RF030202	5-1437416-5	8051, 8070, 8071
SSB7RF060202	5-1437416-6	8051, 8070, 8071
SSB7RG080404	5-1437416-7	8051, 8070, 8071
SSB7RM130202	5-1437416-8	8051, 8070, 8071
SSB7RP020202	5-1437416-9	8051, 8070, 8071
SSB7RP02020211	6-1437416-0	8051, 8070, 8071
SSB7RP030203	6-1437416-1	8051, 8070, 8071
SSB7RP030204	6-1437416-2	8051, 8070, 8071
SSB7RP040201	6-1437416-3	8051, 8070, 8071
SSB7RP04020211	6-1437416-4	8051, 8070, 8071
SSB7RP040204	6-1437416-5	8051, 8070, 8071
SSB7RP050202	6-1437416-6	8051, 8070, 8071
SSB7RP060204	6-1437416-7	8051, 8070, 8071
SSB7RP080202	6-1437416-8	8051, 8070, 8071
SSB7RP090202	6-1437416-9	8051, 8070, 8071
SSB7RP120202	7-1437416-0	8051, 8070, 8071
SSB7T9030402	7-1437416-1	8051, 8070, 8071
SSB7TE020101	7-1437416-2	8051, 8070, 8071
SSB7TE040502	7-1437416-3	8051, 8070, 8071
SSB7TE050722	7-1437416-4	8051, 8070, 8071
SSB7TE060104	7-1437416-5	8051, 8070, 8071
SSB7TE070101	7-1437416-6	8051, 8070, 8071
SSB7TE070103	7-1437416-7	8051, 8070, 8071
SSB7TE070104	7-1437416-8	8051, 8070, 8071
SSB7TE160722	7-1437416-9	8051, 8070, 8071
SSB7TE180501	8-1437416-0	8051, 8070, 8071
SSB7TE180722	8-1437416-1	8051, 8070, 8071
SSB7TF020502	8-1437416-2	8051, 8070, 8071
SSB7TF030502	8-1437416-3	8051, 8070, 8071
SSB7TF040502	8-1437416-4	8051, 8070, 8071
SSB7TF060102	8-1437416-5	8051, 8070, 8071
SSB7TF060102	8-1437416-5	8051, 8070, 8071
SSB7TF060501	8-1437416-6	8051, 8070, 8071
SSB7TF060502	8-1437416-7	8051, 8070, 8071
SSB7TF070502	8-1437416-8	8051, 8070, 8071
SSB7TF080502	8-1437416-9	8051, 8070, 8071
SSB7TF140501	9-1437416-0	8051, 8070, 8071
SSB7TF200501	9-1437416-1	8051, 8070, 8071
SSB7TG010501	5-1437417-6	8051, 8070, 8071
SSB7TG020502	9-1437416-2	8051, 8070, 8071
SSB7TG020503	9-1437416-3	8051, 8070, 8071
SSB7TG030502	9-1437416-4	8051, 8070, 8071
SSB7TG040101	9-1437416-5	8051, 8070, 8071
SSB7TG070101	9-1437416-6	8051, 8070, 8071
SSB7TG080101	9-1437416-7	8051, 8070, 8071
SSB7TG080502	9-1437416-8	8051, 8070, 8071
SSB7TG100101	9-1437416-9	8051, 8070, 8071
SSB7TG100501	1437417-1	8051, 8070, 8071
SSB7TG110902	1-796602-4	8051, 8070, 8071
SSB7TG130902	2-796602-0	8051, 8070, 8071
SSB7TG140101	1-796602-8	8051, 8070, 8071
SSB7TG160402NNN	1437417-2	8051, 8070, 8071
SSB7TG190501	1437417-3	8051, 8070, 8071
SSB7TG200401	1437417-4	8051, 8070, 8071
SSB7TG250103	1-796602-9	8051, 8070, 8071
SSB7TM020501	1437417-5	8051, 8070, 8071
SSB7TM040101	1437417-6	8051, 8070, 8071
SSB7TM060101	1437417-7	8051, 8070, 8071
SSB7TM060102	1437417-8	8051, 8070, 8071
SSB7TM08010	1437417-9	8051, 8070, 8071
SSB7TM160104	1-796602-1	8051, 8070, 8071
SSB7TM200104	1-796602-2	8051, 8070, 8071
SSB7TP030404	1-1437417-0	8051, 8070, 8071
SSB7TP050101	1-1437417-1	8051, 8070, 8071
SSB7TP060402	1-1437417-2	8051, 8070, 8071
SSB7TP060701	1-1437417-3	8051, 8070, 8071
SSB7TP070701	1-1437417-4	8051, 8070, 8071
SSB7TP070703	1-1437417-5	8051, 8070, 8071
SSB7TP090402	1-1437417-6	8051, 8070, 8071
SSB7TP100401	1-1437417-7	8051, 8070, 8071
SSB7TP120501	1-1437417-8	8051, 8070, 8071
SSB7TP120502	5-1437417-7	8051, 8070, 8071
SSB7TP130701	1-1437417-9	8051, 8070, 8071
SSB7TP150402	2-1437417-0	8051, 8070, 8071
SSB7TP150701	2-1437417-1	8051, 8070, 8071
SSB7TP160701	2-1437417-2	8051, 8070, 8071
SSB7TP180102	2-1437417-3	8051, 8070, 8071

Products for Industrial & Commercial Applications

Dimensions are shown for reference purposes only.

Dimensions are in inches and millimeters unless otherwise specified. Values in brackets are metric equivalents.

Specifications subject to change.

Technical Support Center
1-800-522-6752
www.tycoelectronics.com

Acquired Part Number	Tyco Part Number	Page Number
SSJ12	3-1437575-1	6022
SSJ12R	3-1437575-2	6022
SSJ13	3-1437575-3	6022
STS121PC	5-1437577-8	6014
STS121RA	5-1437577-9	6014
STS131PC	6-1437577-2	6014
STS131RA	6-1437577-3	6014
STS141PC	6-1437577-7	6015
STS141RA	6-1437577-8	6015
STS151PC	6-1437577-9	6016
STS151RA	7-1437577-0	6016
STS161PC	7-1437577-1	6016
STS161RA	7-1437577-2	6016
STS220PC	7-1437577-3	6017
STS230PC	7-1437577-5	6017
STS240PC	7-1437577-7	6017
STS250PC	7-1437577-8	6017
STS260PC	7-1437577-9	6017
STSA220RA	8-1437577-0	6017
STSA230RA	8-1437577-2	6017
STSA230RA1	8-1437577-3	6017
STS1300PC	6-1437577-0	6015
STS1300RA	6-1437577-1	6015
STS1400PC	6-1437577-5	6015
STS1400RA	6-1437577-6	6015
STS2400PC	7-1437577-6	6016
TB1	3-1437683-0	8086
TC2-02-AG	7-1437644-1	8077
TC2-03-AG	7-1437644-2	8077
TC2-05-AG	7-1437644-3	8077
TC2-06-AG	7-1437644-4	8077
TC2-08-AG	7-1437644-5	8077
TC2-10-AG	7-1437644-6	8077
TC2-13-AG	7-1437644-7	8077
TC3-02-AG	7-1437644-8	8077
TC3-03-AG	7-1437644-9	8077
TC3-04-AG	8-1437644-0	8077
TC3-06-AG	8-1437644-1	8077
TC3-07-AG	8-1437644-2	8077
TC3-08-AG	8-1437644-3	8077
TC3-12-AG	8-1437644-4	8077
TC3-20-AG	8-1437644-5	8077
TC4-02-PF	1437661-8	8077
TC4-02-PFH	1437661-9	8077
TC4-03	1-1437645-9	8077
TC4-03-PF	1-1437661-0	8077
TC4-03-PF-CL	1-1437661-1	8077
TC4-03-PFH	1-1437661-2	8077
TC4-04-PF	1-1437661-3	8077
TC4-04-PFH	1-1437661-4	8077
TC4-05	1437645-8	8077
TC4-05-PF	1-1437661-5	8077
TC4-05-PFH	1-1437661-6	8077
TC4-06	1-1437645-1	8077
TC4-06-PF	1-1437661-7	8077
TC4-06-PFH	1-1437661-8	8077
TC4-07-PF	1-1437661-9	8077
TC4-07-PFH	2-1437661-0	8077
TC4-08-PF	2-1437661-1	8077
TC4-08-PFH	2-1437661-2	8077
TC4-08-PFH	2-1437661-2	8077
TC4-09-PF	6-1437661-7	8077
TC4-09-PFH	2-1437661-3	8077
TC4-10-PF	2-1437661-4	8077
TC4-10-PFH	2-1437661-5	8077
TC4-12-PF-CL	2-1437661-6	8077
TC4-12-PFH	7-1437661-2	8077
TC4-14	2-1437645-0	8077
TC4-14-PFH	7-1437661-7	8077
TC4-15-PFH	7-1437661-8	8077
TC4-18	1-1437645-7	8077
TC4-28	1-1437645-2	8077
TC6-02-PFH	2-1437661-7	8077
TC6-02-PFH-CL	6-1437661-6	8077
TC6-03	1-1437645-3	8077
TC6-03-PF	2-1437661-8	8077
TC6-03-PFH	2-1437661-9	8077
TC6-03-PFH-CL	3-1437661-0	8077
TC6-04-PF	3-1437661-1	8077
TC6-04-PFH	3-1437661-2	8077
TC6-05	1-1437645-0	8077
TC6-05-PF	3-1437661-3	8077
TC6-05-PFH	3-1437661-4	8077
TC6-06-PF	3-1437661-5	8077
TC6-06-PF-CL	3-1437661-6	8077
TC6-06-PFH	3-1437661-7	8077
TC6-07-PF	6-1437661-9	8077
TC6-07-PFH	3-1437661-8	8077
TC6-08-PF	3-1437661-9	8077
TC6-08-PFH	4-1437661-0	8077
TC6-08-PFH-CL	4-1437661-1	8077
TC6-09-PF	7-1437661-0	8077
TC6-09-PFH	4-1437661-2	8077
TC6-10-PF	4-1437661-3	8077
TC6-10-PF-CL	7-1437661-3	8077
TC6-10-PFH	4-1437661-4	8077
TC6-11-PFH	7-1437661-4	8077
TC6-12-PFH	4-1437661-5	8077
TC6-15-PFH	4-1437661-6	8077
TC6-16-PFH	4-1437661-7	8077
TC8-02-AG	1-1437645-4	8077
TC8-02-PF	4-1437661-8	8077
TC8-02-PFH	7-1437661-5	8077
TC8-03-AG	1-1437645-5	8077
TC8-03-PF	4-1437661-9	8077
TC8-03-PFH	5-1437661-0	8077
TC8-04-PF	5-1437661-1	8077
TC8-04-PFH	5-1437661-2	8077
TC8-05-AG	1437645-7	8077
TC8-05-PF	5-1437661-3	8077
TC8-05-PFH	5-1437661-4	8077
TC8-06-AG	1-1437645-6	8077
TC8-06-PF	5-1437661-5	8077
TC8-06-PFH	5-1437661-6	8077
TC8-07-PF	5-1437661-7	8077
TC8-07-PFH	5-1437661-8	8077
TC8-08-PF	5-1437661-9	8077
TC8-08-PFH	6-1437661-0	8077
TC8-09-AG	9-1437644-0	8077
TC8-09-PF	7-1437661-6	8077
TC8-09-PFH	7-1437661-9	8077
TC8-10-PF	6-1437661-1	8077
TC8-10-PFH	6-1437661-2	8077
TC8-11-PFH	6-1437661-3	8077
TC8-11-PFH	6-1437661-3	8077
TC9-02-AG	9-1437644-2	8077
TC9-03-AG	9-1437644-3	8077
TC9-04-AG	9-1437644-4	8077
TC9-05-AG	9-1437644-6	8077
TC9-06-AG	9-1437644-8	8077
TC9-07-AG	9-1437644-9	8077
TC9-08-AG	1437645-1	8077
TC9-09-AG	1437645-2	8077
TC9-11-AG	2-1437645-1	8077
TC9-14-AG	1437645-4	8077
TC9-18-AG	1437645-5	8077
TK2-2-AG	6-1437685-8	8085
TK2-3-AG	7-1437685-0	8085
TK2-4-AG	7-1437685-3	8085
TK2-6-AG	8-1437685-3	8085
TK2-24-AG	6-1437685-9	8085
TK2-48-AG	7-1437685-6	8085
TK2D-3	9-1437685-0	8085
TK2D-6	9-1437685-2	8085
TK2D-12	8-1437685-8	8085
TK2D-48	9-1437685-1	8085
TK3-3	9-1437685-7	8085
TK5-5	9-1437685-8	8085
TKAD	6-1437661-4	8085
TP1LA2FA8	1-1437568-1	6062
TP2M2AL2FA8	3-1437568-1	6062
TP2M4AL4FA8	3-1437568-4	6062
TR1	1437645-6	8086
TSB100002US	3-1437387-7	8089, 8098
TSB100006DSUS	4-1437387-6	8089, 8098
TSB100007DS	4-1437387-8	8089, 8096
TSB100007DSHT	4-1437387-9	8089, 8097
TSB100008DS	5-1437387-1	8089, 8096
TSB100009DS	5-1437387-3	8089, 8096
TSB100009DSUS	5-1437387-4	8089, 8098
TSB100010DS	5-1437387-5	8089, 8096
TSB100010DSUS	5-1437387-6	8089, 8098
TSB100012DS	5-1437387-9	8089, 8096
TSB100012DSUS	2-1437388-5	8089, 8098
TSB23001DS	796753-1	8088, 8090
TSB23002DS	8-1437387-5	8088, 8090
TSB23003DS	8-1437387-7	8088, 8090
TSB23004DS	8-1437387-9	8088, 8090
TSB23005DS	9-1437387-1	8088, 8090
TSB23006DS	796679-1	8088, 8090
TSB23006DS	9-1437387-3	8088, 8090
TSB23007DS	9-1437387-4	8088, 8090
TSB23008DS	9-1437387-6	8088, 8090
TSB23009DS	9-1437387-8	8088, 8090
TSB23010DS	9-1437387-9	8088, 8090
TSB23011DS	1437388-1	8088, 8090
TSB23012DS	1437388-3	8088, 8090
TSB23012DSHT	1437388-4	8088, 8091
TSB5000131DS	796613-1	8088, 8092
TSB5000231DS	1437388-7	8088, 8092
TSB5000331DS	1437388-9	8088, 8092
TSB5000431DS	1-1437388-1	8088, 8092
TSB5000531DS	1-1437388-2	8088, 8092
TSB5000531DSHT	1-1437388-3	8088, 8093
TSB5000631DS	1-1437388-5	8088, 8092
TSB5000731DS	1-1437388-6	8088, 8092
TSB5000831DS	1-1437388-8	8088, 8092
TSB5000931DS	2-1437388-0	8088, 8092
TSB5001031DS	2-1437388-2	8088, 8092
TSB5001131DS	796613-2	8088, 8092
TSB5001231DS	2-1437388-4	8088, 8092
TSD21DDG1RA	1437579-4	6019
TSD21DDGPC	1437579-5	6018
TSD21DDGRA	1437579-6	6019
TSD21EEGRA	1437579-7	6019
TSS11AGPC	1437578-3	6018
TSS11DG1PC	1437579-8	6018
TSS11DG1RA	1437579-9	6019
TSS11DGPC	1-1437579-0	6018
TSS11DGRA	1-1437579-1	6019
TSS11EG1PC	1-1437579-2	6018
TSS11EG1RA	1-1437579-3	6019
TSS11EGPC	1-1437579-4	6018
TSS11EGRA	1-1437579-5	6019
TSS21KGPC	1-1437579-6	6018
TSS21NG1PC	1-1437579-7	6018
TSS21NG1RA	1-1437579-8	6019
TSS21NGPC	1-1437579-9	6018
TSS21NGRA	2-1437579-0	6019
TSS21PG1RA	2-1437579-2	6019
TSS21PGPC	2-1437579-3	6018
TSS21PGRA	2-1437579-4	6019
TSS41NGPC	2-1437579-5	6018
TSS41NGRA	2-1437579-7	6019
TT11AGPC1	2-1437561-3	6031
TT11AGPC9T1/4	2-1437561-5	6032
TT11DGPC1	2-1437561-6	6031
TT11DGPC9T1/4	3-1437561-5	6032
TT11DGRA7T1/4	4-1437561-5	6033
TT11DGVRA1	4-1437561-8	6032
TT11DGVRA3T	4-1437561-9	6032
TT11EGPC1	5-1437561-1	6031
TT11EGRA7T1/4	6-1437561-7	6033
TT11EGVRA1	6-1437561-9	6032
TT11EGVRA3T	7-1437561-0	6032
TT11FGPC9T1/4	7-1437561-3	6032
TT11FGRA7T1/4	7-1437561-4	6033
TT13A2T	7-1437561-8	6034
TT13A3T	8-1437561-0	6035
TT13A9T1/4	8-1437561-4	6035
TT13D2T	8-1437561-5	6034
TT13D3T	8-1437561-8	6035
TT13D7T1/4	9-1437561-1	6034
TT13D9T1/4	9-1437561-2	6035

Products for Industrial & Commercial Applications

Dimensions are shown for reference purposes only.

Dimensions are in inches and millimeters unless otherwise specified. Values in brackets are metric equivalents.

Specifications subject to change.

Technical Support Center
1-800-522-6752
www.tycoelectronics.com

Acquired Part Number	Tyco Part Number	Page Number
TT13E2T	9-1437561-5	6034
TT13E3T	9-1437561-6	6035
TT13E7T1/4	9-1437561-7	6034
TT13E9T1/4	9-1437561-8	6035
TT21KGPC1	9-1437561-9	6031
TT21NGPC9T1/4	1-1437562-1	6032
TT21NGRA7T1/4	1-1437562-9	6033
TT21NGVRA1	2-1437562-2	6032
TT21NGVRA3T	2-1437562-3	6032
TT21PAGPC1	2-1437562-5	6031
TT21PAGRA7T1/4	3-1437562-2	6033
TT21PGPC1	3-1437562-4	6031
TT21PGRA7T1/4	4-1437562-0	6033
TT21PGVRA1	4-1437562-3	6032
TT21RGPC9T1/4	4-1437562-6	6032
TT23K2T	4-1437562-7	6034
TT23K3T	4-1437562-8	6035
TT23K9T1/4	4-1437562-9	6035
TT23N2T	5-1437562-1	6034
TT23N3T	5-1437562-2	6035
TT23N7T1/4	5-1437562-5	6034
TT23N9T1/4	5-1437562-6	6035
TT23P2T	5-1437562-7	6034
TT23P3T	5-1437562-8	6035
TT23P7T1/4	6-1437562-0	6034
TT23P9T1/4	6-1437562-2	6035
TT23PA3T	6-1437562-3	6035
TT23PA9T1/4	6-1437562-4	6035
TT41NGPC1	6-1437562-6	6031
TT41NGPC9T1/4	6-1437562-8	6032
TT41NGRA7T1/4	7-1437562-2	6033
TT41PGPC9T1/4	7-1437562-5	6032
TT43N2T	7-1437562-6	6034
TT43N3T	7-1437562-7	6035
TT43N7T1/4	7-1437562-8	6034
TT43N9T1/4	7-1437562-9	6035
TT43P3T	8-1437562-0	6035
TT43P9T1/4	8-1437562-1	6035
TX8136-22	2-1437512-2	5017
TX8136-24	2-1437512-3	5017
TX8136-40	2-1437512-4	5017
TX8136-64	2-1437512-5	5017
USB3B02S	5-1437404-3	8051, 8075
USB3B03S	5-1437404-4	8051, 8075
USB3B04S	5-1437404-5	8051, 8075
USB3B05S	5-1437404-6	8051, 8075
USB3B06S	5-1437404-7	8051, 8075
USB3B07S	5-1437404-8	8051, 8075
USB3B08S	5-1437404-9	8051, 8075
USB3B09S	6-1437404-0	8051, 8075
USB3B10S	6-1437404-1	8051, 8075
USB3B11S	6-1437404-2	8051, 8075
USB3B12S	6-1437404-3	8051, 8075
USB3B14S	6-1437404-4	8051, 8075
V40	1-1437612-3	6070
V50	1-1437612-5	6070
V50D	1-1437612-6	6070
VA0	1-1437612-8	6070
VR0	1-1437612-9	6070

Products for Industrial & Commercial Applications

Dimensions are shown for reference purposes only.

Dimensions are in inches and millimeters unless otherwise specified. Values in brackets are metric equivalents.

Specifications subject to change.

Technical Support Center
1-800-522-6752
www.tycoelectronics.com

The Acquired Products Part Number Cross Reference provides a cross reference between Thomas & Betts part numbers identifying ALCOSWITCH, ANSLEY, AUGAT, and BUCHANAN products acquired from Thomas & Betts Corporation, and Tyco Electronics part numbers.

Tyco Part Number	Acquired Part Number	Page Number
1-796602-1	SSB7TM160104	8051, 8070, 8071
1-796602-2	SSB7TM200104	8051, 8070, 8071
1-796602-4	SSB7TG110902	8051, 8070, 8071
1-796602-6	SSB7FP140203	8051, 8070, 8071
1-796602-7	SSB7FE060704	8051, 8070, 8071
1-796602-8	SSB7TG140101	8051, 8070, 8071
1-796602-9	SSB7TG250103	8051, 8070, 8071
2-796602-0	SSB7TG130902	8051, 8070, 8071
796603-1	BC6-T308-07	8050, 8059, 8060
796603-5	BC6-T208-02	8050, 8059, 8060
796613-1	TSB5000131DS	8088, 8092
796613-2	TSB5001131DS	8088, 8092
796658-2	4DB-P108-21	8051, 8066, 8067
796679-1	TSB23006DS	8088, 8090
796709-1	8DBL-05-007	8050, 8063, 8064, 8065
796745-1	51505-1	8116
796753-1	TSB23001DS	8088, 8090
1437000-6	779-2100	4010
1437000-9	779-2151	4010
5-1437000-6	779-3130	4010
6-1437000-4	779-3151	4010
1437001-4	779-3200	4010
1437001-7	779-3500XT	4010
1-1437020-8	609-0600M	4010
1-1437020-9	609-0601M	4010
2-1437020-0	609-0630	4010
2-1437020-2	609-0641	4010
2-1437020-4	609-1000M	4010
2-1437020-7	609-1001M	4010
3-1437020-0	609-1030	4010
3-1437020-9	609-1041	4010
4-1437020-2	609-1400M	4010
4-1437020-4	609-1401M	4010
4-1437020-6	609-1430	4010
5-1437020-2	609-1441	4010
5-1437020-6	609-1600M	4010
5-1437020-9	609-1601M	4010
6-1437020-1	609-1630	4010
6-1437020-8	609-1641	4010
7-1437020-2	609-2000M	4010
7-1437020-6	609-2001M	4010
7-1437020-9	609-2030	4010
8-1437020-8	609-2041	4010
9-1437020-1	609-2400M	4010
9-1437020-2	609-2401M	4010
9-1437020-3	609-2430	4010
9-1437020-6	609-2441	4010
9-1437020-8	609-2600M	4010
1437021-2	609-2601M	4010
1437021-5	609-2630	4010
1-1437021-4	609-2641	4010
1-1437021-9	609-3400M	4010
2-1437021-2	609-3401M	4010
2-1437021-6	609-3430	4010
3-1437021-4	609-3441	4010
3-1437021-8	609-3600M	4010
3-1437021-9	609-3601M	4010
4-1437021-0	609-3630	4010
4-1437021-2	609-3641	4010
4-1437021-4	609-4000M	4010
4-1437021-7	609-4001M	4010
5-1437021-0	609-4030	4010
5-1437021-7	609-4041	4010
6-1437021-8	609-5000M	4010
7-1437021-1	609-5001M	4010
7-1437021-4	609-5030	4010
8-1437021-3	609-5041	4010
9-1437021-6	609-6000M	4010
9-1437021-8	609-6001M	4010
9-1437021-9	609-6030	4010
1437022-7	609-6041	4010
1-1437022-1	609-6401M	4010
1-1437022-2	609-6430	4010
1-1437022-5	609-6441	4010
2-1437044-4	609-0607	4016
2-1437044-7	609-0627	4014
3-1437044-1	609-0647	4016
3-1437044-2	609-0657	4014
3-1437044-4	609-0827	4014, 4022
3-1437044-5	609-0837	4022
3-1437044-6	609-0837ES	4022
3-1437044-7	609-1007	4016, 4019
4-1437044-2	609-1017	4019
4-1437044-3	609-1027	4014, 4022
4-1437044-6	609-1037	4022
4-1437044-7	609-1047	4016
4-1437044-8	609-1057	4014
5-1437044-2	609-1227	4014, 4022
5-1437044-3	609-1407	4016, 4019
5-1437044-8	609-1417	4019
5-1437044-9	609-1427	4014, 4022
6-1437044-6	609-1437	4022
6-1437044-7	609-1447	4016
6-1437044-8	609-1457	4014
7-1437044-3	609-1607	4016, 4019
7-1437044-9	609-1617	4019
8-1437044-0	609-1627	4014, 4022
8-1437044-7	609-1637	4022
8-1437044-9	609-1647	4016
9-1437044-0	609-1657	4014
9-1437044-5	609-2007	4016, 4019
1437045-1	609-2017	4019
1437045-2	609-2027	4014, 4022
1437045-9	609-2037	4022
1-1437045-0	609-2047	4016
1-1437045-1	609-2057	4014
1-1437045-6	609-2407	4016, 4019
1-1437045-8	609-2417	4019
1-1437045-9	609-2427	4014, 4022
2-1437045-1	609-2437	4022
2-1437045-2	609-2447	4016
2-1437045-3	609-2457	4014
2-1437045-5	609-2607	4016, 4019
3-1437045-1	609-2617	4019
3-1437045-2	609-2627	4014, 4022
3-1437045-6	609-2637	4022
3-1437045-8	609-2647	4016
3-1437045-9	609-2657	4014
4-1437045-2	609-3027	4014, 4022
4-1437045-3	609-3027E	4022
4-1437045-4	609-3027ES	4022
4-1437045-5	609-3047	4016
4-1437045-6	609-3057	4014
4-1437045-7	609-3407	4019
5-1437045-3	609-3417	4019
5-1437045-4	609-3427	4014, 4022
5-1437045-9	609-3437	4022
6-1437045-0	609-3447	4016
7-1437045-1	609-3657	4014
7-1437045-3	609-4007	4016, 4019
8-1437045-1	609-4017	4019
8-1437045-3	609-4027	4014, 4022
9-1437045-2	609-4037	4022
9-1437045-4	609-4047	4016
9-1437045-5	609-4057	4014
1437046-6	609-5007	4016, 4019
1-1437046-4	609-5017	4019
1-1437046-5	609-5027	4014, 4022
2-1437046-1	609-5037	4022
2-1437046-2	609-5047	4016
2-1437046-3	609-5057	4014
3-1437046-1	609-6007	4016, 4019
3-1437046-3	609-6017	4019
3-1437046-4	609-6027	4014, 4022
3-1437046-9	609-6047	4016
4-1437046-0	609-6057	4014
4-1437046-3	609-6407	4016, 4019
4-1437046-4	609-6417	4019
4-1437046-6	609-6427	4014, 4022
4-1437046-7	609-6437	4022
4-1437046-8	609-6447	4016
4-1437046-9	609-6457	4014
2-1437050-4	609-3007ES	4019
2-1437050-6	609-3017ES	4019
7-1437051-0	609-6037ES	4022
2-1437054-9	609-0807	4019
3-1437054-0	609-0807ES	4019
1437063-3	501-0607E	4018
1437063-4	501-0607ES	4018
1437063-7	501-0627E	4021
1437063-8	501-0627ES	4021
2-1437063-1	501-1007E	4018
2-1437063-3	501-1007ES	4018
2-1437063-8	501-1027E	4021
3-1437063-0	501-1027ES	4021
3-1437063-5	501-1207E	4018
3-1437063-6	501-1207ES	4018
3-1437063-9	501-1227E	4021
4-1437063-1	501-1227ES	4021
4-1437063-4	501-1407E	4018
4-1437063-6	501-1407ES	4018
5-1437063-1	501-1427	4021
5-1437063-2	501-1427E	4021
5-1437063-3	501-1427ES	4021
5-1437063-6	501-1607E	4018
5-1437063-8	501-1607ES	4018
6-1437063-2	501-1627	4021
6-1437063-3	501-1627E	4021
6-1437063-4	501-1627ES	4021
7-1437063-1	501-2007E	4018
7-1437063-3	501-2007ES	4018
8-1437063-0	501-2027E	4021
8-1437063-1	501-2027ES	4021
8-1437063-6	501-2407E	4018
8-1437063-7	501-2407ES	4018
9-1437063-0	501-2427E	4021
9-1437063-1	501-2427ES	4021
9-1437063-5	501-2607E	4018
9-1437063-7	501-2607ES	4018
1437064-3	501-2627E	4021
1437064-5	501-2627ES	4021
1-1437064-4	501-3007E	4018
1-1437064-5	501-3007ES	4018
2-1437064-3	501-3027E	4021
2-1437064-5	501-3027ES	4021
3-1437064-3	501-3407E	4018
3-1437064-5	501-3407ES	4018
3-1437064-9	501-3427E	4021
4-1437064-1	501-3427ES	4021
5-1437064-2	501-3627E	4021
5-1437064-3	501-3627ES	4021
5-1437064-6	501-4007E	4018
5-1437064-8	501-4007ES	4018
6-1437064-7	501-4027	4021
6-1437064-8	501-4027E	4021
7-1437064-0	501-4027ES	4021
8-1437064-8	501-5007E	4018
9-1437064-1	501-5007ES	4018
9-1437064-8	501-5027E	4021
1437065-1	501-5027ES	4021
1-1437065-8	501-6007E	4018
2-1437065-0	501-6007ES	4018
2-1437065-4	501-6027E	4021
2-1437065-7	501-6027ES	4021
3-1437065-4	501-6407E	4018
3-1437065-5	501-6407ES	4018
3-1437065-9	501-6427E	4021
4-1437065-0	501-6427ES	4021
1437381-5	115-BU	8102
1-1437381-0	13	8103
1-1437381-1	14	8103
1-1437381-2	15	8103
1-1437381-5	228-BU	8122
1-1437381-8	24	8123
1-1437381-9	27	8123
5-1437381-5	43	8124
8-1437381-2	57	8118
1437382-6	70	8110
1-1437382-2	71	8110
1-1437382-3	73	8110
1-1437382-6	76	8129
3-1437387-7	TSB100002US	8089, 8098
4-1437387-6	TSB100006DSUS	8089, 8098
4-1437387-8	TSB100007DS	8089, 8096

Products for Industrial & Commercial Applications

Dimensions are shown for reference purposes only.

Dimensions are in inches and millimeters unless otherwise specified. Values in brackets are metric equivalents.

Specifications subject to change.

Technical Support Center
1-800-522-6752
www.tycoelectronics.com

Tyco Part Number	Acquired Part Number	Page Number
4-1437387-9	TSB100007DSHT	8089, 8097
5-1437387-1	TSB100008DS	8089, 8096
5-1437387-3	TSB100009DS	8089, 8096
5-1437387-4	TSB100009DSUS	8089, 8098
5-1437387-5	TSB100010DS	8089, 8096
5-1437387-6	TSB100010DSUS	8089, 8098
5-1437387-9	TSB100012DS	8089, 8096
8-1437387-5	TSB23002DS	8088, 8090
8-1437387-7	TSB23003DS	8088, 8090
8-1437387-9	TSB23004DS	8088, 8090
9-1437387-1	TSB23005DS	8088, 8090
9-1437387-3	TSB23006DS	8088, 8090
9-1437387-4	TSB23007DS	8088, 8090
9-1437387-6	TSB23008DS	8088, 8090
9-1437387-8	TSB23009DS	8088, 8090
9-1437387-9	TSB23010DS	8088, 8090
1437388-1	TSB23011DS	8088, 8090
1437388-3	TSB23012DS	8088, 8090
1437388-4	TSB23012DSHT	8088, 8091
1437388-7	TSB5000231DS	8088, 8092
1437388-9	TSB5000331DS	8088, 8092
1-1437388-1	TSB5000431DS	8088, 8092
1-1437388-2	TSB5000531DS	8088, 8092
1-1437388-3	TSB5000531DSHT	8088, 8093
1-1437388-5	TSB5000631DS	8088, 8092
1-1437388-6	TSB5000731DS	8088, 8092
1-1437388-8	TSB5000831DS	8088, 8092
2-1437388-0	TSB5000931DS	8088, 8092
2-1437388-2	TSB5001031DS	8088, 8092
2-1437388-4	TSB5001231DS	8088, 8092
2-1437388-5	TSB100012DSUS	8089, 8098
1437389-1	D012514	8103
1437389-2	D0211	8123
1437389-3	D0211006	8123
1437389-4	D0212	8123
1437389-5	D021210	8123
1437389-6	D0213	8123
1437389-7	D0221	8123
1437389-8	D0222	8123
1437389-9	D0223	8123
1-1437389-8	D0511	8117
1-1437389-9	D0514	8117
2-1437389-0	D0521	8117
2-1437389-1	D0525	8117
2-1437389-3	D061112-1	8111
2-1437389-4	D061126-1	8111
2-1437389-5	D0615	8107
2-1437389-6	D0625	8107
2-1437389-7	D0711	8109
2-1437389-8	D0714	8109
2-1437389-9	D0715	8109
3-1437389-0	D0724	8109
3-1437389-1	D0725	8109
3-1437389-2	D115	8102
3-1437389-3	D125	8102
3-1437389-4	D211	8123
3-1437389-5	D212	8123
3-1437389-6	D221	8123
3-1437389-7	D22104	8123
3-1437389-8	D222	8123
3-1437389-9	D223	8123
4-1437389-6	D511	8117
4-1437389-7	D514	8117
4-1437389-8	D515	8117
4-1437389-9	D521	8117
5-1437389-0	D525	8117
5-1437389-1	D614	8107
5-1437389-2	D615	8107
5-1437389-3	D714	8109
5-1437389-4	D715	8109
5-1437389-5	D721	8109
5-1437389-6	D724	8109
5-1437389-7	D725	8109
5-1437389-8	D814-BU	8128
5-1437389-9	D824	8128
6-1437389-4	DP0621	8107
6-1437389-5	DP0624	8107
6-1437389-6	DP062406	8111
6-1437389-7	DP062410	8111
6-1437389-8	DP0625	8107
6-1437389-9	DP0721	8109
7-1437389-0	DP0725	8109
7-1437389-1	DP125	8102
7-1437389-2	DP624	8107
7-1437389-3	DP721	8109
7-1437389-4	DP724	8109
1437390-1	211	8122
1437390-2	211010	8122
1437390-6	021309-1	8122
1437390-8	221	8122
1437390-9	222	8122
1-1437390-2	223	8122
1-1437390-3	228	8122
3-1437390-1	221	8122
3-1437390-6	223-BU	8122
3-1437390-7	22306-BU	8122
4-1437390-4	93-BU	8129
4-1437390-6	D213	8123
1437391-1	11510	8103
1437391-2	511	8116
1437391-3	051120-1	8116
1-1437391-0	515	8116
1-1437391-1	51510	8116
1-1437391-5	521	8116
1-1437391-6	524	8116
1-1437391-7	0524PS	8117
1-1437391-8	525	8116
1-1437391-9	527	8116
2-1437391-0	529	8117
2-1437391-3	0724PS	8108
2-1437391-4	511-BU	8116
2-1437391-9	51408	8116
3-1437391-1	51508	8116
3-1437391-4	521	8116
3-1437391-5	524	8116
3-1437391-6	524PS	8117
3-1437391-7	525	8116
3-1437391-8	52505	8116
3-1437391-9	527	8116
4-1437391-0	529	8117
4-1437391-4	D051512	8116
5-1437391-3	P062530	8111
1437392-1	1156	8103
1437392-2	0125-22	8103
1437392-3	0125-64	8103
1437392-4	0125-64-1	8103
1437392-5	12503	8103
1437392-6	12506	8103
1437392-7	12508	8103
1437392-8	012512-1	8103
1437392-9	12513	8103
1-1437392-0	012516-1	8103
1-1437392-1	012540-1	8103
1-1437392-8	110-BU	8102
2-1437392-1	120	8102
2-1437392-5	130-BU	8102
2-1437392-9	D105	8102
3-1437392-1	J10	8102
3-1437392-2	J2-BU	8102
4-1437392-6	P012510	8103
4-1437392-7	P125	8102
4-1437392-9	P130	8102
1437393-4	61512	8111
1437393-7	621	8106
1437393-8	62106	8111
1437393-9	62112	8111
1-1437393-0	62148	8111
1-1437393-3	62507	8111
1-1437393-4	62580	8111
1-1437393-6	627	8107
1-1437393-7	628	8106
1-1437393-8	629	8107
2-1437393-1	072506-1	8111
2-1437393-2	40-BU	8118
2-1437393-3	41-BU	8124
2-1437393-5	54-BU	8117
2-1437393-6	614-BU	8106
2-1437393-7	615-BU	8106
2-1437393-8	618-BU	8106
3-1437393-0	621	8106
3-1437393-2	62406	8111
3-1437393-4	62506	8111
3-1437393-6	628	8106
3-1437393-7	629	8107
3-1437393-8	630-BU	8106
4-1437393-1	74100	8111
6-1437393-2	P0621	8106
6-1437393-3	P0624	8106
6-1437393-4	P0625	8106
6-1437393-5	P062512	8111
6-1437393-6	P062525	8111
6-1437393-7	P0630	8106
6-1437393-8	P621	8106
6-1437393-9	P624	8106
7-1437393-0	P625	8106
7-1437393-1	P62510	8111
7-1437393-2	P628	8106
7-1437393-3	P630	8106
1437394-1	011503-1	8103
1437394-2	11511	8103
1437394-4	714	8108
1437394-5	715	8109
1-1437394-3	72507	8111
1-1437394-4	72516	8111
1-1437394-7	727	8109
1-1437394-8	728	8108
2-1437394-3	627	8107
2-1437394-5	714	8108
2-1437394-6	714PS	8108
2-1437394-7	715	8109
2-1437394-9	724	8108
3-1437394-1	72510	8111
3-1437394-2	728	8108
3-1437394-3	729	8109
4-1437394-8	P0721	8108
4-1437394-9	P072130-1	8111
5-1437394-0	P0724	8108
5-1437394-1	P0725	8109
5-1437394-2	P072506	8111
5-1437394-3	P0727	8109
5-1437394-4	P0728	8108
5-1437394-6	P721	8108
5-1437394-7	P724	8108
5-1437394-8	P725	8109
6-1437394-0	P728	8108
1437395-2	814	8128
1437395-4	82403-1	8074
1437395-5	82405	8128
1-1437395-4	830-BU	8128
1437401-3	611-BU	8106
5-1437404-3	USB3B02S	8051, 8075
5-1437404-4	USB3B03S	8051, 8075
5-1437404-5	USB3B04S	8051, 8075
5-1437404-6	USB3B05S	8051, 8075
5-1437404-7	USB3B06S	8051, 8075
5-1437404-8	USB3B07S	8051, 8075
5-1437404-9	USB3B08S	8051, 8075
6-1437404-0	USB3B09S	8051, 8075
6-1437404-1	USB3B10S	8051, 8075
6-1437404-2	USB3B11S	8051, 8075
6-1437404-3	USB3B12S	8051, 8075
6-1437404-4	USB3B14S	8051, 8075
2-1437405-1	SM2V02	8047
1437407-3	RSB6B02S	8051, 8076
1437407-4	RSB6B03S	8051, 8076
1437407-5	RSB6B04S	8051, 8076
1437407-6	RSB6B06S	8051, 8076
1437407-7	RSB6B10S	8051, 8076
1437407-8	RSB6BB3S	8051, 8076
1437410-8	PCB1A12A	8078
1437410-9	PCB1A12S	8078
1-1437410-0	PCB1A18A	8078
1-1437410-1	PCB1A18S	8078
1-1437410-2	PCB1A24A	8078

Products for Industrial & Commercial Applications

Dimensions are shown for reference purposes only.

Dimensions are in inches and millimeters unless otherwise specified. Values in brackets are metric equivalents.

Specifications subject to change.

Technical Support Center
1-800-522-6752
www.tycoelectronics.com

Tyco Part Number	Acquired Part Number	Page Number
1-1437410-3	PCB1A24S	8078
1-1437410-4	PCB1A30A	8078
1-1437410-5	PCB1A30S	8078
1-1437410-6	PCB1A36A	8078
1-1437410-7	PCB1A36S	8078
1-1437410-8	PCB1B06S	8079
1-1437410-9	PCB1B08AG	8079
2-1437410-0	PCB1B08S	8079
2-1437410-1	PCB1B10A	8079
2-1437410-2	PCB1B10AG	8079
2-1437410-3	PCB1B10S	8079
2-1437410-4	PCB1B10SG	8079
2-1437410-5	PCB1B12A	8079
2-1437410-6	PCB1B12AG	8079
2-1437410-7	PCB1B12S	8079
2-1437410-8	PCB1B12SG	8079
2-1437410-9	PCB1B15A	8079
3-1437410-0	PCB1B15AG	8079
3-1437410-1	PCB1B15S	8079
3-1437410-2	PCB1B16AG	8079
3-1437410-3	PCB1B16SG	8079
3-1437410-4	PCB1B18A	8079
3-1437410-5	PCB1B18AG	8079
3-1437410-6	PCB1B18S	8079
3-1437410-7	PCB1B18SG	8079
3-1437410-8	PCB1B22A	8079
3-1437410-9	PCB1B22AG	8079
4-1437410-0	PCB1B22S	8079
4-1437410-1	PCB1B22SG	8079
4-1437410-2	PCB1B28A	8079
4-1437410-3	PCB1B28AG	8079
4-1437410-4	PCB1B28S	8079
4-1437410-5	PCB1B28SG	8079
4-1437410-6	PCB1B30SG	8079
4-1437410-7	PCB1B32A	8079
4-1437410-8	PCB1B32AG	8079
4-1437410-9	PCB1B32S	8079
5-1437410-0	PCB1B32SG	8079
5-1437410-1	PCB1B36A	8079
5-1437410-2	PCB1B36AG	8079
5-1437410-3	PCB1B36S	8079
5-1437410-4	PCB1B36SG	8079
5-1437410-5	PCB1B43A	8079
5-1437410-6	PCB1B43AG	8079
5-1437410-7	PCB1B43S	8079
5-1437410-8	PCB1B43SG	8079
5-1437410-9	PCB2B06A	8080
6-1437410-1	PCB2B06S	8080
6-1437410-2	PCB2B08A	8080
6-1437410-3	PCB2B08S	8080
6-1437410-4	PCB2B09S	8080
6-1437410-5	PCB2B10A	8080
6-1437410-6	PCB2B10S	8080
6-1437410-7	PCB2B12A	8080
6-1437410-8	PCB2B12S	8080
6-1437410-9	PCB2B15A	8080
7-1437410-0	PCB2B15S	8080
7-1437410-1	PCB2B16A	8080
7-1437410-2	PCB2B16S	8080
7-1437410-3	PCB2B18A	8080
7-1437410-4	PCB2B18S	8080
7-1437410-5	PCB2B22A	8080
7-1437410-6	PCB2B22S	8080
7-1437410-7	PCB2B24A	8080
7-1437410-8	PCB2B28A	8080
7-1437410-9	PCB2B28S	8080
8-1437410-0	PCB2B30A	8080
8-1437410-1	PCB2B30S	8080
8-1437410-2	PCB2B36A	8080
8-1437410-3	PCB2B36S	8080
8-1437410-4	PCB2B43A	8080
8-1437410-5	PCB2B43S	8080
8-1437410-7	PCB3A06A	8081
8-1437410-8	PCB3A06S	8081
8-1437410-9	PCB3A08A	8081
9-1437410-0	PCB3A08S	8081
9-1437410-1	PCB3A10A	8081
9-1437410-2	PCB3A10S	8081
9-1437410-3	PCB3A12A	8081
9-1437410-4	PCB3A12S	8081
9-1437410-5	PCB3A15A	8081
9-1437410-6	PCB3A15S	8081
9-1437410-7	PCB3A16A	8081
9-1437410-8	PCB3A16S	8081
9-1437410-9	PCB3A18A	8081
1437411-1	PCB3A18A617415	8081
1437411-2	PCB3A18S	8081
1437411-3	PCB3A22A	8081
1437411-4	PCB3A22S	8081
1437411-5	PCB3A24A	8081
1437411-6	PCB3A24S	8081
1437411-7	PCB3A30A	8081
1437411-8	PCB3A30S	8081
1437411-9	PCB3A32A	8081
1-1437411-0	PCB3A32S	8081
1-1437411-1	PCB3A36A	8081
1-1437411-2	PCB3A36A617207	8081
1-1437411-3	PCB3A36S	8081
1-1437411-4	PCB3A44A	8081
1437412-5	7C1N13	8074
1437412-6	7C1N25	8074
6-1437415-3	SSB7CE04030	8051, 8070, 8071
6-1437415-4	SSB7CF130300	8051, 8070, 8071
6-1437415-5	SSB7CG020326	8051, 8070, 8071
6-1437415-6	SSB7CG050301	8051, 8070, 8071
6-1437415-7	SSB7CG050304	8051, 8070, 8071
6-1437415-8	SSB7CG05030411	8051, 8070, 8071
7-1437415-0	SSB7CG050326	8051, 8070, 8071
7-1437415-2	SSB7CG060302	8051, 8070, 8071
7-1437415-3	SSB7CG090301	8051, 8070, 8071
7-1437415-4	SSB7CG090304	8051, 8070, 8071
7-1437415-5	SSB7CG09032224	8051, 8070, 8071
7-1437415-6	SSB7CG140301	8051, 8070, 8071
7-1437415-7	SSB7CG160304	8051, 8070, 8071
7-1437415-8	SSB7FE020202	8051, 8070, 8071
7-1437415-9	SSB7FE030501	8051, 8070, 8071
8-1437415-0	SSB7FE140204	8051, 8070, 8071
8-1437415-1	SSB7FE180501	8051, 8070, 8071
8-1437415-2	SSB7FF030101	8051, 8070, 8071
8-1437415-3	SSB7FF041503	8051, 8070, 8071
8-1437415-4	SSB7FF101501	8051, 8070, 8071
8-1437415-5	SSB7FG020209	8051, 8070, 8071
8-1437415-6	SSB7FG030103	8051, 8070, 8071
8-1437415-7	SSB7FG050103	8051, 8070, 8071
8-1437415-8	SSB7FG050202	8051, 8070, 8071
8-1437415-9	SSB7FG060701	8051, 8070, 8071
9-1437415-0	SSB7FG080201	8051, 8070, 8071
9-1437415-1	SSB7FG150202	8051, 8070, 8071
9-1437415-2	SSB7FG160201	8051, 8070, 8071
9-1437415-3	SSB7FM030201	8051, 8070, 8071
9-1437415-4	SSB7FM030202	8051, 8070, 8071
9-1437415-5	SSB7FM060201	8051, 8070, 8071
9-1437415-6	SSB7FM06020211	8051, 8070, 8071
9-1437415-7	SSB7FM070602	8051, 8070, 8071
9-1437415-8	SSB7FM081301	8051, 8070, 8071
1437416-1	SSB7FM090201	8051, 8070, 8071
1437416-2	SSB7FP020201	8051, 8070, 8071
1437416-3	SSB7FP02020111	8051, 8070, 8071
1437416-4	SSB7FP020202	8051, 8070, 8071
1437416-5	SSB7FP020203	8051, 8070, 8071
1437416-6	SSB7FP030201	8051, 8070, 8071
1437416-8	SSB7FP030202	8051, 8070, 8071
1437416-9	SSB7FP030203	8051, 8070, 8071
1-1437416-0	SSB7FP040200	8051, 8070, 8071
1-1437416-1	SSB7FP040201	8051, 8070, 8071
1-1437416-2	SSB7FP040202	8051, 8070, 8071
1-1437416-3	SSB7FP040203NNN	8051, 8070, 8071
1-1437416-4	SSB7FP040401	8051, 8070, 8071
1-1437416-5	SSB7FP050201	8051, 8070, 8071
1-1437416-6	SSB7FP05020111	8051, 8070, 8071
1-1437416-7	SSB7FP050202	8051, 8070, 8071
1-1437416-8	SSB7FP050203	8051, 8070, 8071
1-1437416-9	SSB7FP050402	8051, 8070, 8071
2-1437416-0	SSB7FP060200	8051, 8070, 8071
2-1437416-1	SSB7FP060201	8051, 8070, 8071
2-1437416-2	SSB7FP060202	8051, 8070, 8071
2-1437416-3	SSB7FP060203	8051, 8070, 8071
2-1437416-4	SSB7FP070201	8051, 8070, 8071
2-1437416-5	SSB7FP07020111	8051, 8070, 8071
2-1437416-6	SSB7FP070203	8051, 8070, 8071
2-1437416-7	SSB7FP080101	8051, 8070, 8071
2-1437416-8	SSB7FP080202	8051, 8070, 8071
2-1437416-9	SSB7FP080203	8051, 8070, 8071
3-1437416-0	SSB7FP080204	8051, 8070, 8071
3-1437416-1	SSB7FP080401	8051, 8070, 8071
3-1437416-2	SSB7FP090202	8051, 8070, 8071
3-1437416-3	SSB7FP090401	8051, 8070, 8071
3-1437416-4	SSB7FP100201	8051, 8070, 8071
3-1437416-5	SSB7FP100202	8051, 8070, 8071
3-1437416-6	SSB7FP100203	8051, 8070, 8071
3-1437416-7	SSB7FP100280	8051, 8070, 8071
3-1437416-8	SSB7FP110200	8051, 8070, 8071
3-1437416-9	SSB7FP110203	8051, 8070, 8071
4-1437416-0	SSB7FP120201	8051, 8070, 8071
4-1437416-1	SSB7FP120202	8051, 8070, 8071
4-1437416-2	SSB7FP120203	8051, 8070, 8071
4-1437416-3	SSB7FP130201	8051, 8070, 8071
4-1437416-4	SSB7FP140102	8051, 8070, 8071
4-1437416-5	SSB7FP140201	8051, 8070, 8071
4-1437416-6	SSB7FP150201	8051, 8070, 8071
4-1437416-7	SSB7FP150202	8051, 8070, 8071
4-1437416-8	SSB7FP150203	8051, 8070, 8071
4-1437416-9	SSB7FP150902	8051, 8070, 8071
5-1437416-0	SSB7FP170202	8051, 8070, 8071
5-1437416-1	SSB7FP18020212	8051, 8070, 8071
5-1437416-2	SSB7FP200202	8051, 8070, 8071
5-1437416-3	SSB7FP250202	8051, 8070, 8071
5-1437416-4	SSB7FP260202	8051, 8070, 8071
5-1437416-5	SSB7RF030202	8051, 8070, 8071
5-1437416-6	SSB7RF060202	8051, 8070, 8071
5-1437416-7	SSB7RG080404	8051, 8070, 8071
5-1437416-8	SSB7RM130202	8051, 8070, 8071
5-1437416-9	SSB7RP020202	8051, 8070, 8071
6-1437416-0	SSB7RP02020211	8051, 8070, 8071
6-1437416-1	SSB7RP030203	8051, 8070, 8071
6-1437416-2	SSB7RP030204	8051, 8070, 8071
6-1437416-3	SSB7RP040201	8051, 8070, 8071
6-1437416-4	SSB7RP04020211	8051, 8070, 8071
6-1437416-5	SSB7RP040204	8051, 8070, 8071
6-1437416-6	SSB7RP050202	8051, 8070, 8071
6-1437416-7	SSB7RP060204	8051, 8070, 8071
6-1437416-8	SSB7RP080202	8051, 8070, 8071
6-1437416-9	SSB7RP090202	8051, 8070, 8071
7-1437416-0	SSB7RP120202	8051, 8070, 8071
7-1437416-1	SSB7T9030402	8051, 8070, 8071
7-1437416-2	SSB7TE020101	8051, 8070, 8071
7-1437416-3	SSB7TE040502	8051, 8070, 8071
7-1437416-4	SSB7TE050722	8051, 8070, 8071
7-1437416-5	SSB7TE060104	8051, 8070, 8071
7-1437416-6	SSB7TE070101	8051, 8070, 8071
7-1437416-7	SSB7TE070103	8051, 8070, 8071
7-1437416-8	SSB7TE070104	8051, 8070, 8071
7-1437416-9	SSB7TE160722	8051, 8070, 8071
8-1437416-0	SSB7TE180501	8051, 8070, 8071
8-1437416-1	SSB7TE180722	8051, 8070, 8071
8-1437416-2	SSB7TF020502	8051, 8070, 8071
8-1437416-3	SSB7TF030502	8051, 8070, 8071
8-1437416-4	SSB7TF040502	8051, 8070, 8071
8-1437416-5	SSB7TF060102	8051, 8070, 8071
8-1437416-5	SSB7TF060102	8051, 8070, 8071
8-1437416-6	SSB7TF060501	8051, 8070, 8071
8-1437416-7	SSB7TF060502	8051, 8070, 8071
8-1437416-8	SSB7TF070502	8051, 8070, 8071
8-1437416-9	SSB7TF080502	8051, 8070, 8071
9-1437416-0	SSB7TF140501	8051, 8070, 8071
9-1437416-1	SSB7TF200501	8051, 8070, 8071
9-1437416-2	SSB7TG020502	8051, 8070, 8071
9-1437416-3	SSB7TG020503	8051, 8070, 8071
9-1437416-4	SSB7TG030502	8051, 8070, 8071
9-1437416-5	SSB7TG040101	8051, 8070, 8071
9-1437416-6	SSB7TG070101	8051, 8070, 8071
9-1437416-7	SSB7TG080101	8051, 8070, 8071
9-1437416-8	SSB7TG080502	8051, 8070, 8071
9-1437416-9	SSB7TG100101	8051, 8070, 8071

Products for Industrial & Commercial Applications

Dimensions are shown for reference purposes only.

Dimensions are in inches and millimeters unless otherwise specified. Values in brackets are metric equivalents.

Specifications subject to change.

Technical Support Center
1-800-522-6752
www.tycoelectronics.com

Tyco Part Number	Acquired Part Number	Page Number
1437417-1	SSB7TG100501	8051, 8070, 8071
1437417-2	SSB7TG160402NNN	8051, 8070, 8071
1437417-3	SSB7TG190501	8051, 8070, 8071
1437417-4	SSB7TG200401	8051, 8070, 8071
1437417-5	SSB7TM020501	8051, 8070, 8071
1437417-6	SSB7TM040101	8051, 8070, 8071
1437417-7	SSB7TM060101	8051, 8070, 8071
1437417-8	SSB7TM060102	8051, 8070, 8071
1437417-9	SSB7TM08010	8051, 8070, 8071
1-1437417-0	SSB7TP030404	8051, 8070, 8071
1-1437417-1	SSB7TP050101	8051, 8070, 8071
1-1437417-2	SSB7TP060402	8051, 8070, 8071
1-1437417-3	SSB7TP060701	8051, 8070, 8071
1-1437417-4	SSB7TP070701	8051, 8070, 8071
1-1437417-5	SSB7TP070703	8051, 8070, 8071
1-1437417-6	SSB7TP090402	8051, 8070, 8071
1-1437417-7	SSB7TP100401	8051, 8070, 8071
1-1437417-8	SSB7TP120501	8051, 8070, 8071
1-1437417-9	SSB7TP130701	8051, 8070, 8071
2-1437417-0	SSB7TP150402	8051, 8070, 8071
2-1437417-1	SSB7TP150701	8051, 8070, 8071
2-1437417-2	SSB7TP160701	8051, 8070, 8071
2-1437417-3	SSB7TP180102	8051, 8070, 8071
5-1437417-6	SSB7TG010501	8051, 8070, 8071
5-1437417-7	SSB7TP120502	8051, 8070, 8071
3-1437418-7	7C1F13	8074
3-1437418-8	7C1F16	8074
3-1437418-9	7C1N02	8074
4-1437418-0	7C1N03	8074
4-1437418-1	7C1N04	8074
4-1437418-2	7C1N05	8074
4-1437418-3	7C1N06	8074
4-1437418-4	7C1N07	8074
4-1437418-5	7C1N08	8074
4-1437418-6	7C1N09	8074
4-1437418-7	7C1N10	8074
4-1437418-8	7C1N12	8074
4-1437418-9	7C1N16	8074
5-1437418-0	7C1N19	8074
5-1437418-1	7C1N48	8074
5-1437418-7	J7140	8118
5-1437418-8	J7240	8118
5-1437418-9	J7340	8118
1-1437502-2	8041-1G2	5078
1-1437502-3	8041-1G2-1	5078
1-1437502-4	8041-1G3-1	5078
1-1437502-5	8041-1G4	5078
1-1437502-6	8041-1G4-1	5077, 5078
1-1437502-7	8041-1G5	5078
1-1437502-8	8041-1G6	5078
1-1437502-9	8041-1G7-1	5078
2-1437502-0	8041-1G8	5078
2-1437502-1	8041-1G9-1	5078
2-1437502-2	8046-1	5080
2-1437502-3	8046-1G10	5080
2-1437502-4	8046-1G2	5080
2-1437502-5	8046-1G3	5080
2-1437502-6	8046-1G4	5080
2-1437502-7	8046-1G5	5080
2-1437502-8	8046-1G6	5080
2-1437502-9	8046-1G7	5080
5-1437502-4	8041-1G11	5078
1437503-2	8000-AG2	5056, 5057, 5059
1437503-3	8000-AG3	5057
1437503-4	8000-AG36	5057, 5060
1437503-6	8000-AG9	5057, 5059
1-1437503-0	8004-1G1	5057
1-1437503-2	8004-1G16	5057
1-1437503-3	8004-1G2	5057
1-1437503-4	8004-1G23	5057, 5058
1-1437503-6	8004-1G26	5057
1-1437503-7	8004-1G3	5057
1-1437503-8	8004-1G4	5057, 5058
2-1437503-1	8004-23G1	5057
1437504-3	8060-1G10	5069
1437504-4	8060-1G11	5069
1437504-5	8060-1G12	5069
1437504-6	8060-1G13	5069
1437504-7	8060-1G16	5071, 5072
1437504-8	8060-1G17	5069
1-1437504-0	8060-1G20	5072
1-1437504-1	8060-1G22	5069
1-1437504-2	8060-1G23	5072
1-1437504-3	8060-1G25	5072
1-1437504-4	8060-1G3	5069
1-1437504-5	8060-1G34	5072
1-1437504-7	8060-1G4	5069
1-1437504-9	8060-1G5	5069
2-1437504-1	8060-1G6	5067, 5069
2-1437504-3	8060-1G7	5069
2-1437504-5	8060-1G8	5069
2-1437504-6	8060-1G9	5069
2-1437504-9	8080-1G1	5074
3-1437504-0	8080-1G10	5074
3-1437504-1	8080-1G13	5074
3-1437504-2	8080-1G14	5074
3-1437504-3	8080-1G15	5074
3-1437504-4	8080-1G16	5074
3-1437504-5	8080-1G17	5074
3-1437504-8	8080-1G2	5074
3-1437504-9	8080-1G20	5074
4-1437504-0	8080-1G24	5074
4-1437504-1	8080-1G25	5074
4-1437504-2	8080-1G3	5074
4-1437504-3	8080-1G31	5074
4-1437504-4	8080-1G32	5074
4-1437504-5	8080-1G33	5074
4-1437504-6	8080-1G34	5074
4-1437504-7	8080-1G35	5074
4-1437504-8	8080-1G37	5074
4-1437504-9	8080-1G39	5074
5-1437504-0	8080-1G4	5074
5-1437504-1	8080-1G45	5074
5-1437504-3	8080-1G7	5073, 5074
5-1437504-5	8080-1G9	5074
1-1437506-6	8134-HC-14P2-B	5044
1437507-7	8136-475G1	5062
1-1437507-0	8136-475G2	5062
1-1437507-3	8136-475G3	5062
1-1437507-5	8136-475G4	5062
1-1437507-7	8136-475G7	5062
1-1437507-9	8136-475G8	5061, 6062
2-1437507-1	8136-475G9	5062
2-1437507-2	8136-477P1	5062
2-1437507-3	8136-650P2	5062
2-1437507-4	8136-650P3	5062
2-1437507-5	8136-651P2	5062
2-1437507-6	8136-651P3	5062
2-1437507-7	8136-652P1	5062
2-1437507-8	8136-652P2	5062
2-1437507-9	8136-652P3	5062
3-1437507-0	8136-652P4	5062
3-1437507-1	8136-652P5	5062
3-1437507-2	8136-652P6	5062
1437508-5	8058-1G19	5068
1437508-7	8058-1G23	5068
1437508-9	8058-1G24	5068
1-1437508-2	8058-1G29	5068
1-1437508-4	8058-1G30	5068
1-1437508-5	8058-1G31	5068
1-1437508-6	8058-1G32	5068
1-1437508-8	8058-1G34	5068
1-1437508-9	8058-1G42	5068
2-1437508-0	8058-1G45	5068
2-1437508-1	8058-1G46	5068
2-1437508-2	8058-1G47	5068
2-1437508-3	8058-1G48	5068
2-1437508-4	8058-1G49	5068
2-1437508-6	8058-1G51	5068
2-1437508-7	8058-1G52	5068
2-1437508-8	8058-1G57	5068
2-1437508-9	8058-1G59	5068
3-1437508-0	8058-1G63	5068
3-1437508-2	8058-24G1	5068
3-1437508-5	8058-39G1	5068
3-1437508-6	8058-39G3	5068
3-1437508-7	8058-39G4	5068
3-1437508-8	8058-39G5	5068
3-1437508-9	8058-39G6	5068
4-1437508-1	8059-2G1	5057
4-1437508-2	8059-2G10	5057
4-1437508-3	8059-2G2	5057
4-1437508-4	8059-2G3	5057
4-1437508-5	8059-2G4	5057
4-1437508-6	8059-2G5	5057
4-1437508-7	8059-2G6	5057
4-1437508-8	8059-2G7	5065
4-1437508-9	8059-2G8	5057
5-1437508-0	8059-2G9	5057
5-1437508-1	8059-4G1	5057
5-1437508-2	8059-4G4	5057
5-1437508-3	M8058-1G18	5068
5-1437508-4	M8058-1G19	5068
5-1437508-5	M8058-1G22	5068
5-1437508-6	M8058-1G23	5068
5-1437508-7	M8058-1G24	5068
5-1437508-8	M8058-1G29	5068
5-1437508-9	M8058-1G31	5068
6-1437508-0	M8058-1G32	5068
6-1437508-1	M8058-1G33	5068
6-1437508-2	M8058-1G91	5068
6-1437508-3	M8058-45G2	5068
2-1437509-9	8128-39P6	5050
3-1437509-1	8128-40P10	5050
3-1437509-3	8128-41P6	5050
2-1437512-2	TX8136-22	5017
2-1437512-3	TX8136-24	5017
2-1437512-4	TX8136-40	5017
2-1437512-5	TX8136-64	5017
1-1437514-8	322-HCS14P2-100	5045
1-1437514-9	322-HCS14P3-100	5045
2-1437514-0	322-HCS5P2-100	5045
2-1437514-5	322-HCS5P2-314	5045
2-1437514-6	322-HCS5P2-316	5045
2-1437514-7	322-HCS5P2-318	5045
2-1437514-8	322-HCS5P2-320	5045
2-1437514-9	322-HCS5P2-400	5045
3-1437514-0	322-HCS5P2-422	5045
3-1437514-1	322-HCS5P2-600	5045
3-1437514-2	322-HCS5P2-624	5045
3-1437514-3	322-HCS5P2-628	5045
3-1437514-4	322-HCS5P2-632	5045
3-1437514-5	322-HCS5P2-640	5045
3-1437514-6	322-HCS5P3-100	5045
3-1437514-7	322-HCS5P3-300	5045
3-1437514-8	322-HCS5P3-308	5045
4-1437514-0	322-HCS5P3-600	5045
4-1437514-1	322-HCS5P3-624	5045
4-1437514-2	322-HCS5P3-628	5045
4-1437514-3	322-HCS6P2-100	5045
4-1437514-4	322-HCS6P3-100	5045
4-1437514-5	322-HCS8P2-100	5045
4-1437514-7	322-HCS8P3-100	5045
4-1437514-8	398-HK-001	5047
4-1437514-9	398-HK-002	5047
5-1437514-3	399-HT-112	5047
5-1437514-5	399-HT-113	5047
5-1437514-7	399-HT-114	5047
5-1437514-8	736-M0020	5047
5-1437514-9	8134-HC-12P2	5044
6-1437514-0	8134-HC-12P3	5044
6-1437514-2	8134-HC-14P3	5044
6-1437514-6	8134-HC-5P2	5044
6-1437514-7	8134-HC-5P3	5044
6-1437514-8	8134-HC-6P2	5044
6-1437514-9	8134-HC-6P3	5044
7-1437514-0	8134-HC-8P2	5044
7-1437514-1	8134-HC-8P3	5044
1437515-6	608-AG1	5049
1437515-8	608-AG19	5052
1437515-9	608-AG1T	5049
1-1437515-0	608-AG21	5052
1-1437515-1	608-AG22	5052
1-1437515-2	608-CG1	5049

Products for Industrial & Commercial Applications

Dimensions are shown for reference purposes only.

Dimensions are in inches and millimeters unless otherwise specified. Values in brackets are metric equivalents.

Specifications subject to change.

Technical Support Center
1-800-522-6752
www.tycoelectronics.com

Tyco Part Number	Acquired Part Number	Page Number
1-1437515-3	608-CG1T	5049
1-1437515-5	610-AG22	5052
1-1437515-7	614-AG1	5049
1-1437515-8	614-AG1T	5049
1-1437515-9	614-BG1	5049
2-1437515-0	614-CG1	5049
2-1437515-2	614-CG1T	5049
2-1437515-3	614-CG2	5049
2-1437515-4	614-CG3	5049
2-1437515-8	616-AG1	5049
2-1437515-9	616-AG1T	5049
3-1437515-0	616-AG2	5049
3-1437515-1	616-CG1	5049
3-1437515-3	616-CG1T	5049
3-1437515-5	616-CG2	5049
3-1437515-6	616-CG3	5049
4-1437515-1	618-AG1	5049
4-1437515-2	618-AG1T	5049
4-1437515-3	618-CG1	5049
4-1437515-4	618-CG1T	5049
4-1437515-5	620-AG1	5049
4-1437515-6	620-AG1T	5049
4-1437515-7	620-BG1	5049
4-1437515-8	620-CG1	5049
4-1437515-9	620-CG1T	5049
5-1437515-1	622-AG1	5049
5-1437515-2	622-CG1	5049
5-1437515-3	622-CG1T	5049
5-1437515-5	624-AG1	5049
5-1437515-6	624-AG1T	5049
5-1437515-7	624-CG1	5049
5-1437515-8	624-CG1T	5049
6-1437515-4	628-AG2	5049
6-1437515-6	628-CG2	5049
6-1437515-7	628-CG2T	5049
6-1437515-9	632-CG2	5049
7-1437515-2	636-CG1T	5049
7-1437515-3	640-AG1	5049
7-1437515-4	640-AG1T	5049
7-1437515-5	640-BG1	5049
7-1437515-6	640-CG1	5049
7-1437515-7	640-CG1T	5049
1437516-4	616-BG1	5049
5-1437529-9	504-AG10D	5064
6-1437529-0	504-AG10F	5064
6-1437529-1	504-AG11D	5064
6-1437529-2	504-AG12D	5064
6-1437529-5	506-AG10D	5009
6-1437529-8	506-AG11D	5009
7-1437529-1	506-AG12D	5009
7-1437529-5	508-AG10D	5009
7-1437529-9	508-AG11D	5009
8-1437529-0	508-AG11D-IES	5009
8-1437529-3	508-AG12D	5009
9-1437529-3	508-AG4A	5054
9-1437529-5	508-AG4F	5054
9-1437529-6	508-AG7D	5054
9-1437529-7	508-AG8D	5053, 5054
1437530-3	508-AG8D-5	5055
1-1437531-7	514-AG10D	5009
2-1437531-0	514-AG11D	5009
2-1437531-4	514-AG12D	5009
3-1437531-0	514-AG21D	5054
3-1437531-8	514-AG7D	5054
4-1437531-0	516-AG10D-ESL	5009
4-1437531-8	516-AG12D	5009
5-1437531-3	516-AG21D	5053, 5054
5-1437531-9	516-AG7D	5054
6-1437531-5	518-AG10D-ESL	5009
6-1437531-9	518-AG11D	5009
7-1437531-3	518-AG12D	5009
7-1437531-5	518-AG7D	5054
7-1437531-8	520-AG10D	5009
7-1437531-9	520-AG10D-ESL	5009
8-1437531-6	520-AG12D	5009
9-1437531-7	520-AG7D	5054
9-1437531-9	522-AG10D	5009
1437532-2	522-AG11D	5009
1437532-3	522-AG12D	5009
1-1437532-7	524-AG12D	5009
1-1437532-9	524-AG13D	5009
2-1437532-5	524-AG66D	5009
3-1437532-3	528-AG10D-ESL	5009
4-1437532-1	528-AG12D	5009
5-1437532-8	532-AG10D	5009
6-1437532-1	532-AG11D	5009
6-1437532-5	532-AG12D	5009
7-1437532-1	536-AG11D	5009
7-1437532-2	536-AG12D	5009
7-1437532-6	540-AG10D	5009
7-1437532-7	540-AG10D-ESL	5009
8-1437532-3	540-AG12D	5009
8-1437533-1	824-AG31SM	5015
1-1437534-8	S520-AG11D	5009
1-1437534-9	S524-AG11D	5009
2-1437534-0	S528-AG11D	5009
1437538-3	828-AG10D	5013
1437538-4	828-AG11D	5013
1437538-9	828-AG11SM	5015
1-1437538-0	828-AG12D	5013
1-1437538-1	828-AG12SM	5015
1437539-2	808-AG10D-ES	5013
1437539-5	808-AG11D-ES	5013
1437539-6	808-AG11D-ESL	5013
1437539-8	808-AG12D-ES	5013
1-1437539-4	814-AG10D-ES	5013
1-1437539-6	814-AG11D-ES	5013
1-1437539-7	814-AG11D-ESL	5013
2-1437539-0	814-AG12D-ES	5013
2-1437539-6	816-AG10D-ES	5013
2-1437539-8	816-AG11D-ES	5013
2-1437539-9	816-AG11D-ESL	5013
3-1437539-1	816-AG12D-ES	5013
4-1437539-1	818-AG10D-ES	5013
4-1437539-3	818-AG11D-ES	5013
4-1437539-4	818-AG11D-ESL	5013
4-1437539-6	818-AG12D-ES	5013
5-1437539-0	820-AG10D-ES	5013
5-1437539-2	820-AG11D-ES	5013
5-1437539-3	820-AG11D-ESL	5013
6-1437539-0	822-AG10D-ES	5013
6-1437539-2	822-AG11D-ES	5013
6-1437539-3	822-AG11D-ESL	5013
6-1437539-4	822-AG12D-ES	5013
6-1437539-7	824-AG10D-ES	5013
6-1437539-9	824-AG11D-ES	5013
7-1437539-0	824-AG11D-ESL	5013
7-1437539-2	824-AG12D-ES	5013
7-1437539-3	824-AG30D-ES	5013
7-1437539-4	824-AG30D-ESL	5013
7-1437539-6	824-AG31D-ES	5013
7-1437539-7	824-AG31D-ESL	5013
8-1437539-1	824-AG32D-ES	5013
8-1437539-9	828-AG10D-ES	5013
9-1437539-1	828-AG11D-ES	5012, 5013
9-1437539-2	828-AG11D-ESL	5013
9-1437539-4	828-AG12D-ES	5013
1437540-1	832-AG10D-ES	5013
1437540-2	832-AG11D-ES	5013
1437540-3	832-AG11D-ESL	5013
1437540-5	832-AG12D-ES	5013
1-1437540-0	836-AG11D-ES	5013
1-1437540-1	836-AG11D-ESL	5013
1-1437540-2	836-AG12D-ES	5013
1-1437540-4	840-AG10D-ES	5013
1-1437540-6	840-AG11D-ES	5013
1-1437540-7	840-AG11D-ESL	5013
1-1437540-9	840-AG12D-ES	5013
2-1437540-3	842-AG11D-ES	5013
2-1437540-4	842-AG11D-ESL	5013
2-1437540-5	848-AG10D-ES	5013
2-1437540-6	848-AG11D-ES	5013
2-1437540-7	848-AG11F-ESL	5013
2-1437540-8	848-AG12D-ES	5013
3-1437540-1	864-AG10D	5014
3-1437540-2	864-AG10D-ES	5014
1437542-6	706-AG1D	5011
1437542-7	706-AG2D	5011
1437542-8	706-AG2D-ES	5011
1437542-9	706-AG2D-ESL	5011
1-1437542-0	708-AG1D	5011
1-1437542-1	708-AG2D	5011
1-1437542-2	708-AG2D-ES	5011
1-1437542-3	714-AG1D	5011
1-1437542-4	714-AG20D	5011
1-1437542-5	714-AG2D-ES	5011
1-1437542-6	714-AG2D-ESL	5011
1-1437542-7	716-AG1D	5011
1-1437542-9	716-AG2D	5011
2-1437542-0	716-AG2D-ES	5011
2-1437542-2	718-AG1D	5011
2-1437542-4	718-AG2D	5011
2-1437542-5	718-AG2D-ES	5011
2-1437542-6	718-AG2D-ESL	5011
2-1437542-7	720-AG1D	5011
2-1437542-8	720-AG20D	5011
2-1437542-9	720-AG2D	5011
3-1437542-0	720-AG2D-ES	5011
3-1437542-1	720-AG2D-ESL	5011
3-1437542-2	722-AG1D	5011
3-1437542-3	722-AG21D	5011
3-1437542-4	722-AG22D	5011
3-1437542-5	722-AG2D	5011
3-1437542-6	722-AG2D-ES	5011
3-1437542-7	724-AG10D	5011
3-1437542-8	724-AG1D	5011
3-1437542-9	724-AG20D	5011
4-1437542-1	724-AG21D	5011
4-1437542-2	724-AG22D-ES	5011
4-1437542-3	724-AG2D	5011
4-1437542-4	724-AG2D-ES	5011
4-1437542-5	724-AG3D	5011
4-1437542-6	724-AG4D	5011
4-1437542-7	724-AG4D-ES	5011
4-1437542-8	724-AG4D-ESL	5011
5-1437542-0	728-AG30D	5011
5-1437542-1	728-AG3D	5011
5-1437542-2	728-AG40D	5011
5-1437542-3	728-AG4D	5011
5-1437542-4	728-AG4D-ES	5011
5-1437542-5	728-AG4D-ESL	5011
5-1437542-7	732-AG3D	5011
5-1437542-8	732-AG4D	5011
5-1437542-9	732-AG4D-ES	5011
6-1437542-0	732-AG4D-ESL	5011
6-1437542-1	740-AG3D	5011
6-1437542-2	740-AG40D	5011
6-1437542-4	740-AG4D	5011
6-1437542-5	740-AG4D-ES	5011
1-1437558-0	MTA106D	6038
1-1437558-1	MTA106DPC	6039
1-1437558-2	MTA106E	6038
1-1437558-3	MTA106EPC	6039
1-1437558-5	MTA106FPC	6039
1-1437558-6	MTA106G	6038
1-1437558-7	MTA106GPC	6039
1-1437558-8	MTA106H	6038
1-1437558-9	MTA106HPC	6039
2-1437558-0	MTA206N	6038
2-1437558-1	MTA206NPC	6039
2-1437558-2	MTA206P	6038
2-1437558-3	MTA206PA	6038
2-1437558-4	MTA206PAPC	6039
2-1437558-5	MTA206PPC	6039
2-1437558-6	MTA206PVRA	6045
2-1437558-7	MTA206R	6038
2-1437558-8	MTA206RPC	6039
2-1437558-9	MTA206S	6038
3-1437558-0	MTA206SA	6038
3-1437558-1	MTA206SPC	6039
3-1437558-2	MTA206T	6038
3-1437558-3	MTA206TA	6038
3-1437558-4	MTA206TPC	6039
3-1437558-5	MTA306D	6038

Products for Industrial & Commercial Applications

Dimensions are shown for reference purposes only.

Dimensions are in inches and millimeters unless otherwise specified. Values in brackets are metric equivalents.

Specifications subject to change.

Technical Support Center
1-800-522-6752
www.tycoelectronics.com

Tyco Part Number	Acquired Part Number	Page Number
3-1437558-6	MTA306DPC	6039
3-1437558-7	MTA306E	6038
3-1437558-8	MTA306EPC	6039
3-1437558-9	MTA306F	6038
4-1437558-0	MTA306FPC	6039
4-1437558-1	MTA306H	6038
4-1437558-2	MTA306HPC	6039
4-1437558-4	MTA406NPC	6039
4-1437558-5	MTA406P	6038
4-1437558-6	MTA406PA	6038
4-1437558-7	MTA406PAPC	6039
4-1437558-8	MTA406PPC	6039
5-1437558-0	MTA8106DRA	6044
5-1437558-1	MTA8106DVRA	6045
5-1437558-6	MTA8206NRA	6044
5-1437558-7	MTA8206NVRA	6045
5-1437558-9	MTA8206PRA	6044
6-1437558-0	MTA8206PVRA	6045
1-1437559-1	MTG106D	6040
1-1437559-2	MTG106E	6040
1-1437559-3	MTG106F	6040
1-1437559-4	MTG106G	6040
1-1437559-5	MTG106H	6040
1-1437559-6	MTG126D	6041
1-1437559-7	MTG126E	6041
1-1437559-8	MTG206N	6040
2-1437559-0	MTG206P	6040
2-1437559-1	MTG206PA	6040
2-1437559-2	MTG206R	6040
2-1437559-3	MTG206S	6040
2-1437559-4	MTG206T	6040
2-1437559-5	MTG226N	6041
2-1437559-6	MTG226P	6041
2-1437559-7	MTG226PA	6041
2-1437559-8	MTG306D	6040
2-1437559-9	MTG306E	6040
3-1437559-0	MTG326D	6041
3-1437559-1	MTG406N	6040
3-1437559-2	MTG406P	6040
3-1437559-3	MTG426N	6041
3-1437559-4	MTL106D	6042
3-1437559-5	MTL106E	6042
3-1437559-7	MTL206N	6042
3-1437559-9	MTL206P	6042
4-1437559-0	MTL206PA	6042
4-1437559-1	MTL206S	6042
4-1437559-2	MTL306D	6042
4-1437559-4	MTL406N	6042
4-1437559-5	MTL406PA	6042
4-1437559-6	MTM106DPC	6043
4-1437559-7	MTM106EPC	6043
4-1437559-8	MTM106FPC	6043
4-1437559-9	MTM206NPC	6043
5-1437559-0	MTM206PAPC	6043
5-1437559-2	MTM206SPC	6043
5-1437559-3	MTM306DPC	6043
5-1437559-4	MTM406NPC	6043
5-1437559-6	MTM8106DRA	6044
5-1437559-7	MTM8106DVRA	6045
5-1437559-8	MTM8106ERA	6044
5-1437559-9	MTM8106EVRA	6045
6-1437559-0	MTM8206NRA	6044
2-1437561-3	TT11AGPC1	6031
2-1437561-5	TT11AGPC9T1/4	6032
2-1437561-6	TT11DGPC1	6031
3-1437561-5	TT11DGPC9T1/4	6032
4-1437561-5	TT11DGRA7T1/4	6033
4-1437561-8	TT11DGVRA1	6032
4-1437561-9	TT11DGVRA3T	6032
5-1437561-1	TT11EGPC1	6031
6-1437561-7	TT11EGRA7T1/4	6033
6-1437561-9	TT11EGVRA1	6032
7-1437561-0	TT11EGVRA3T	6032
7-1437561-3	TT11FGPC9T1/4	6032
7-1437561-4	TT11FGRA7T1/4	6033
7-1437561-8	TT13A2T	6034
8-1437561-0	TT13A3T	6035
8-1437561-4	TT13A9T1/4	6035
8-1437561-5	TT13D2T	6034
8-1437561-8	TT13D3T	6035
9-1437561-1	TT13D7T1/4	6034
9-1437561-2	TT13D9T1/4	6035
9-1437561-5	TT13E2T	6034
9-1437561-6	TT13E3T	6035
9-1437561-7	TT13E7T1/4	6034
9-1437561-8	TT13E9T1/4	6035
9-1437561-9	TT21KGPC1	6031
1-1437562-1	TT21NGPC9T1/4	6032
1-1437562-9	TT21NGRA7T1/4	6033
2-1437562-2	TT21NGVRA1	6032
2-1437562-3	TT21NGVRA3T	6032
2-1437562-5	TT21PAGPC1	6031
3-1437562-2	TT21PAGRA7T1/4	6033
3-1437562-4	TT21PGPC1	6031
4-1437562-0	TT21PGRA7T1/4	6033
4-1437562-3	TT21PGVRA1	6032
4-1437562-6	TT21RGPC9T1/4	6032
4-1437562-7	TT23K2T	6034
4-1437562-8	TT23K3T	6035
4-1437562-9	TT23K9T1/4	6035
5-1437562-1	TT23N2T	6034
5-1437562-2	TT23N3T	6035
5-1437562-5	TT23N7T1/4	6034
5-1437562-6	TT23N9T1/4	6035
5-1437562-7	TT23P2T	6034
5-1437562-8	TT23P3T	6035
6-1437562-0	TT23P7T1/4	6034
6-1437562-2	TT23P9T1/4	6035
6-1437562-3	TT23PA3T	6035
6-1437562-4	TT23PA9T1/4	6035
6-1437562-6	TT41NGPC1	6031
6-1437562-8	TT41NGPC9T1/4	6032
7-1437562-2	TT41NGRA7T1/4	6033
7-1437562-5	TT41PGPC9T1/4	6032
7-1437562-6	TT43N2T	6034
7-1437562-7	TT43N3T	6035
7-1437562-8	TT43N7T1/4	6034
7-1437562-9	TT43N9T1/4	6035
8-1437562-0	TT43P3T	6035
8-1437562-1	TT43P9T1/4	6035
1437565-2	FSM100	6048
1437565-3	FSM101	6048
1437565-7	FSM10J	6046
1437565-8	FSM11J	6046
1437565-9	FSM12J	6046
1-1437565-0	FSM13J	6046
1-1437565-2	FSM14J	6046
1-1437565-3	FSM16J	6046
1-1437565-4	FSM18J	6046
1-1437565-5	FSM1J	6046
2-1437565-0	FSM2J	6046
3-1437565-3	FSM3J	6046
3-1437565-6	FSM4J	6046
4-1437565-4	FSM5J	6046
4-1437565-5	FSM6J	6046
5-1437565-1	FSM7J	6046
5-1437565-2	FSM8J	6046
7-1437565-5	FSM9J	6046
8-1437565-4	FSMRA1J	6047
8-1437565-5	FSMRA2J	6047
9-1437565-0	FSMRA3J	6047
9-1437565-1	FSMRA4J	6047
9-1437565-2	FSMRA5J	6047
9-1437565-3	FSMRA6J	6047
9-1437565-5	FSMRA7J	6047
4-1437567-9	MPG106D	6058
5-1437567-0	MPG106F	6058
5-1437567-1	MPG206N	6058
5-1437567-2	MPG206NPC	6058
5-1437567-3	MPG206R	6058
5-1437567-4	MPG206RPC	6058
5-1437567-5	MPG306D	6058
5-1437567-6	MPG306F	6058
5-1437567-7	MPG406N	6058
5-1437567-8	MPG406R	6058
5-1437567-9	MPS103D	6059
6-1437567-0	MPS103DPC	6060
6-1437567-1	MPS103DPCV	6060
6-1437567-2	MPS103DRA	6061
6-1437567-3	MPS103F	6059
6-1437567-4	MPS103FPC	6060
6-1437567-5	MPS103FPCV	6060
6-1437567-6	MPS103FRA	6061
6-1437567-7	MPS103FWW	6060
6-1437567-8	MPS203N	6059
6-1437567-9	MPS203NPC	6060
7-1437567-1	MPS203NRA	6061
7-1437567-2	MPS203R	6059
7-1437567-3	MPS203RPC	6060
7-1437567-4	MPS203RPCV	6060
7-1437567-5	MPS203RRA	6061
7-1437567-6	MPS203RWW	6060
8-1437567-0	MPSN103F	6059
8-1437567-1	MPSR103F	6059
8-1437567-2	MPSR203R	6059
8-1437567-3	MSP103B	6061
8-1437567-4	MSP103C	6061
8-1437567-5	MSP103C0	6061
8-1437567-6	MSP103C2	6061
1437568-5	MSPS103B	6061
1437568-6	MSPS103C	6061
1437568-7	MSPS103C0	6061
1-1437568-1	TP1LA2FA8	6062
3-1437568-1	TP2M2AL2FA8	6062
3-1437568-4	TP2M4AL4FA8	6062
1437574-9	SE1DGPC	6013
1-1437574-1	SE1DGRA	6013
1-1437574-4	SE1EGPC	6013
1-1437574-5	SE1EGRA	6013
1-1437574-6	SE2DGPC	6013
1-1437574-8	SE2DGRA	6013
2-1437574-0	SE2EGPC	6013
2-1437574-1	SE2EGRA	6013
1437575-4	MMS12	6023
1437575-5	MMS22	6023
1437575-6	MMS22R	6023
1-1437575-4	SSA12	6025
1-1437575-5	SSA12G	6025
1-1437575-6	SSA22	6025
1-1437575-7	SSA22G	6025
1-1437575-8	SSB12	6024
1-1437575-9	SSB12G	6024
2-1437575-0	SSB12R	6024
2-1437575-1	SSB12RG	6024
2-1437575-2	SSB22	6024
2-1437575-3	SSB22G	6024
2-1437575-4	SSB22R	6024
2-1437575-5	SSB22RG	6024
2-1437575-8	SSB42	6024
2-1437575-9	SSB42G	6024
3-1437575-1	SSJ12	6022
3-1437575-2	SSJ12R	6022
3-1437575-3	SSJ13	6022
1437576-9	MHS122	6020
1-1437576-0	MHS122G	6020
1-1437576-1	MHS122GRA	6021
1-1437576-2	MHS122K	6020
1-1437576-3	MHS122KG	6020
1-1437576-4	MHS122RA	6021
1-1437576-5	MHS123	6020
1-1437576-6	MHS123GRA	6021
1-1437576-7	MHS123K	6020
1-1437576-8	MHS123RA	6021
1-1437576-9	MHS133	6020
2-1437576-0	MHS133G	6020
2-1437576-1	MHS133GRA	6021
2-1437576-2	MHS133K	6020
2-1437576-3	MHS133KG	6020
2-1437576-4	MHS133RA	6021
2-1437576-5	MHS222	6020
2-1437576-6	MHS222G	6020
2-1437576-7	MHS222GRA	6021
2-1437576-8	MHS222K	6020
2-1437576-9	MHS222KG	6020

Products for Industrial & Commercial Applications

Dimensions are shown for reference purposes only.

Dimensions are in inches and millimeters unless otherwise specified. Values in brackets are metric equivalents.

Specifications subject to change.

Technical Support Center
1-800-522-6752
www.tycoelectronics.com

Tyco Part Number	Acquired Part Number	Page Number
3-1437576-0	MHS222RA	6021
3-1437576-1	MHS223	6020
3-1437576-3	MHS223GRA	6021
3-1437576-4	MHS223K	6020
3-1437576-5	MHS223RA	6021
3-1437576-6	MHS233	6020
4-1437576-1	MHS233RA	6021
4-1437576-2	MHS433	6020
4-1437576-3	MHS433RA	6021
1-1437577-0	SL330	6027
1-1437577-1	SL550	6027
1-1437577-2	SL660	6027
1-1437577-3	SL770	6027
1-1437577-4	SL880	6027
1-1437577-5	SLS120	6027
1-1437577-6	SLS1201	6027
1-1437577-7	SLS121	6026
1-1437577-8	SLS1211	6028
1-1437577-9	SLS121PC	6029
2-1437577-2	SLS121RA	6029
2-1437577-4	SLS131PC	6030
2-1437577-6	SLS131RA	6030
2-1437577-8	SLS141PC	6030
3-1437577-0	SLS141RA	6030
3-1437577-2	SLS151PC	6030
3-1437577-4	SLS151RA	6030
3-1437577-7	SLS220	6030
3-1437577-8	SLS2201	6026
4-1437577-3	SLS240PCA	6027
5-1437577-3	SLSA120	6027
5-1437577-4	SLSA1201	6027
5-1437577-5	SLSA220	6026
5-1437577-6	SLSA2201	6028
5-1437577-8	STS121PC	6014
5-1437577-9	STS121RA	6014
6-1437577-0	STS1300PC	6015
6-1437577-1	STS1300RA	6015
6-1437577-2	STS131PC	6014
6-1437577-3	STS131RA	6014
6-1437577-5	STS1400PC	6015
6-1437577-6	STS1400RA	6015
6-1437577-7	STS141PC	6015
6-1437577-8	STS141RA	6015
6-1437577-9	STS151PC	6016
7-1437577-0	STS151RA	6016
7-1437577-1	STS161PC	6016
7-1437577-2	STS161RA	6016
7-1437577-3	STS220PC	6017
7-1437577-5	STS230PC	6017
7-1437577-6	STS2400PC	6016
7-1437577-7	STS240PC	6017
7-1437577-8	STS250PC	6017
7-1437577-9	STS260PC	6017
8-1437577-0	STSA220RA	6017
8-1437577-2	STSA230RA	6017
8-1437577-3	STSA230RA1	6017
1437578-3	TSS11AGPC	6018
1437579-4	TSD21DDG1RA	6019
1437579-5	TSD21DDGPC	6018
1437579-6	TSD21DDGRA	6019
1437579-7	TSD21EEGRA	6019
1437579-8	TSS11DG1PC	6018
1437579-9	TSS11DG1RA	6019
1-1437579-0	TSS11DGPC	6018
1-1437579-1	TSS11DGRA	6019
1-1437579-2	TSS11EG1PC	6018
1-1437579-3	TSS11EG1RA	6019
1-1437579-4	TSS11EGPC	6018
1-1437579-5	TSS11EGRA	6019
1-1437579-6	TSS21KGPC	6018
1-1437579-7	TSS21NG1PC	6018
1-1437579-8	TSS21NG1RA	6019
1-1437579-9	TSS21NGPC	6018
2-1437579-0	TSS21NGRA	6019
2-1437579-2	TSS21PG1RA	6019
2-1437579-3	TSS21PGPC	6018
2-1437579-4	TSS21PGRA	6019
2-1437579-5	TSS41NGPC	6018
2-1437579-7	TSS41NGRA	6019
1437581-2	ASE22	6012
1437581-4	ASE22G	6012
1437581-8	ASE22R	6009
1437581-9	ASE22RG	6012
1-1437581-4	ASE42	6012
1-1437581-6	ASE42G	6012
1-1437581-9	ASE42R	6012
2-1437581-0	ASE42RG	6012
2-1437581-5	ASE43	6012
2-1437581-6	ASE43G	6012
2-1437581-9	ASE43R	6012
3-1437581-0	ASE43RG	6012
3-1437581-1	ASE62	6012
3-1437581-3	ASE62G	6009
3-1437581-6	ASE62R	6012
3-1437581-7	ASE62RG	6012
6-1437581-2	ASF22R	6009
6-1437581-3	ASF22RG	6012
6-1437581-8	ASF42	6012
7-1437581-3	ASF42R	6012
7-1437581-4	ASF42RG	6012
7-1437581-8	ASF43	6012
8-1437581-2	ASF43RG	6012
8-1437581-4	ASF62	6012
8-1437581-9	ASF62R	6012
9-1437581-1	ASF62RG	6012
1437586-2	ADE02	6006
1437586-7	ADE03	6006
1-1437586-0	ADE04	6006
1-1437586-5	ADE05	6006
1-1437586-8	ADE06	6006
2-1437586-3	ADE07	6006
2-1437586-6	ADE08	6006
3-1437586-0	ADE09	6006
3-1437586-2	ADE10	6006
3-1437586-8	ADE12	6006
4-1437586-2	ADF02	6006
5-1437586-1	ADF03	6006
5-1437586-7	ADF04	6006
6-1437586-5	ADF05	6006
7-1437586-1	ADF06	6006
8-1437586-1	ADF07	6006
8-1437586-6	ADF08	6006
9-1437586-6	ADF09	6006
1437587-1	ADF10	6006
1-1437587-1	ADP02	6007
1-1437587-5	ADP04	6007
2-1437587-0	ADP05	6007
2-1437587-2	ADP06	6007
2-1437587-5	ADP07	6007
2-1437587-6	ADP08	6007
3-1437587-0	ADP09	6007
3-1437587-3	ADP10	6007
4-1437587-7	ADPA02	6007
4-1437587-8	ADPA04	6007
5-1437587-2	ADPA05	6007
5-1437587-4	ADPA06	6007
5-1437587-7	ADPA07	6007
5-1437587-8	ADPA08	6007
6-1437587-1	ADPA10	6007
8-1437592-1	MTA106FVRA	6045
1437610-6	M60532	6072
1-1437610-2	M60582	6072
1-1437610-3	M60652	6072
2-1437610-2	M6200	6074
2-1437610-3	M6201	6074
2-1437610-4	M6202	6074
2-1437610-5	M6210	6074
2-1437610-6	M6250	6074
2-1437610-7	M6270	6074
2-1437610-8	M6280	6074
3-1437610-5	M65310	6073
3-1437610-6	M65510	6073
3-1437610-7	M65810	6073
1437612-9	F40	6070
1-1437612-0	F50	6070
1-1437612-1	FA0	6070
1-1437612-2	FR0	6070
1-1437612-3	V40	6070
1-1437612-5	V50	6070
1-1437612-6	V50D	6070
1-1437612-8	VA0	6070
1-1437612-9	VR0	6070
1437614-1	E1	6067
1-1437614-9	QT01201	6066
3-1437614-4	RM0450	6066
3-1437614-5	RM0452	6066
3-1437614-6	RM0500	6066
3-1437614-7	RM0502	6066
3-1437614-8	RM0532	6066
3-1437614-9	RM0552	6066
4-1437614-0	RM0652	6066
5-1437614-3	RM1652	6068
5-1437614-4	RM200	6067
5-1437614-5	RM201	6067
5-1437614-6	RM204	6067
5-1437614-7	RM205	6067
5-1437614-8	RM210	6068
5-1437614-9	RM220	6068
6-1437614-0	RM222	6068
6-1437614-1	RM230	6068
6-1437614-2	RM232	6068
6-1437614-3	RM233	6068
6-1437614-4	RM243	6068
6-1437614-5	RM250	6067
6-1437614-6	RM270	6068
6-1437614-7	RM272	6068
6-1437614-8	RM273	6068
6-1437614-9	RM280	6068
7-1437614-0	RM3040	6067
7-1437614-1	RM3100	6067
7-1437614-2	RM3120	6067
7-1437614-3	RM3130	6067
7-1437614-7	RM4040	6067
7-1437614-8	RM4100	6067
1437615-1	RT0500	6066
1437615-2	RT0502	6066
1-1437615-2	SR601	6068
1437617-1	G001	6074
1437621-2	K1250A1/4	6078
1437621-3	K1250B1/4	6079
1437621-4	K1251B1/4	6078
1437621-5	K1255BS1/4	6078
1437621-6	K500A1/4	6078
1437621-7	K500A1/8	6078
1437621-8	K500B1/4	6078
1437621-9	K500B1/8	6078
1-1437621-0	K700A1/4	6078
1-1437621-1	K700B1/4	6078
1-1437621-3	K900A1/4	6078
1-1437621-4	K900B1/4	6078
1-1437621-8	KA1250B1/4	6078
1-1437621-9	KA500A1/4	6078
2-1437621-0	KA500A1/8	6078
2-1437621-1	KA500B1/4	6078
2-1437621-2	KA500B1/8	6078
2-1437621-3	KA700A1/4	6078
2-1437621-4	KA700B1/4	6078
2-1437621-5	KA900A1/4	6078
2-1437621-6	KA900B1/4	6078
2-1437621-7	KAS500A1/4	6078
2-1437621-8	KAS500A1/8	6078
2-1437621-9	KAS500B1/4	6078
3-1437621-0	KAS500B1/8	6078
3-1437621-1	KAS700A1/4	6078
3-1437621-2	KAS700B1/4	6078
3-1437621-3	KAS900A1/4	6078
3-1437621-4	KAS900B1/4	6078
3-1437621-5	KB500A1/4	6079
3-1437621-6	KB500A1/8	6079
3-1437621-8	KB500B1/4	6079
3-1437621-9	KB500B1/8	6079
4-1437621-0	KB700A1/4	6079
4-1437621-2	KB700B1/4	6079
4-1437621-4	KB900A1/4	6079

Products for Industrial & Commercial Applications

Dimensions are shown for reference purposes only.

Dimensions are in inches and millimeters unless otherwise specified. Values in brackets are metric equivalents.

Specifications subject to change.

Technical Support Center
1-800-522-6752
www.tycoelectronics.com

Tyco Part Number	Acquired Part Number	Page Number
4-1437621-5	KB900B1/4	6079
4-1437621-9	KBS500A101/8	6079
5-1437621-2	KBS500B101/4	6079
5-1437621-3	KBS500B101/8	6079
5-1437621-6	KCB500A1/4	6079
5-1437621-7	KCB500A1/8	6079
5-1437621-8	KCB500B1/4	6079
5-1437621-9	KCB500B1/8	6079
6-1437621-0	KCB600A1/8	6079
6-1437621-1	KCB600B1/4	6079
6-1437621-2	KCB600B1/8	6079
6-1437621-3	KCB700A1/4	6079
6-1437621-4	KCB700B1/4	6079
6-1437621-5	KCB900A1/4	6079
6-1437621-7	KCB900B1/4	6079
6-1437621-8	KD1250A1/4	6080
6-1437621-9	KD1250B1/4	6080
7-1437621-0	KD500A1/4	6080
7-1437621-1	KD500A1/8	6080
7-1437621-2	KD500B1/4	6080
7-1437621-3	KD500B1/8	6080
7-1437621-4	KD700A1/4	6080
7-1437621-5	KD700B1/4	6080
7-1437621-6	KD900A1/4	6080
7-1437621-7	KD900B1/4	6080
7-1437621-8	KE1250AB1/4	6080
7-1437621-9	KE500AB1/4	6080
8-1437621-0	KE500AB1/8	6080
8-1437621-1	KE700AB1/4	6080
8-1437621-2	KE900AB1/4	6080
8-1437621-3	KES500AB1/4	6080
8-1437621-4	KES500AB1/8	6080
8-1437621-5	KES700AB1/4	6080
1-1437622-5	KLNS500A1/4	6083
1-1437622-6	KLNS500A1/8	6082
1-1437622-7	KLNS500B1/4	6083
1-1437622-8	KLNS500B1/8	6083
2-1437622-0	KLNS700A1/4	6083
2-1437622-1	KLNS700B1/4	6082
2-1437622-2	KLNS900A1/4	6083
2-1437622-3	KLNS900B1/4	6083
2-1437622-6	KN1250AB1/4	6084
2-1437622-7	KN1250B1/4	6084
2-1437622-8	KN1250BA1/4	6084
2-1437622-9	KN1251A1/4	6084
3-1437622-0	KN1251B1/4	6084
3-1437622-1	KN1750B1/4	6083
3-1437622-2	KN1751A1/4	6082
3-1437622-3	KN1751AB1/4	6083
3-1437622-4	KN1751ABS1/4	6082
3-1437622-5	KN1751AS1/4	6083
3-1437622-8	KN1751BS1/4	6083
3-1437622-9	KN1755ABS1/4	6083
4-1437622-0	KN1755BAS1/4	6083
4-1437622-1	KN1755BS1/4	6084
4-1437622-2	KN500A1/4	6084
4-1437622-3	KN500A1/8	6084
4-1437622-4	KN500AB1/4	6084
4-1437622-5	KN500AB1/8	6084
4-1437622-6	KN500B1/4	6084
4-1437622-7	KN500B1/8	6084
4-1437622-8	KN500BA1/4	6084
4-1437622-9	KN500BA1/8	6084
5-1437622-0	KN501A1/4	6083
5-1437622-1	KN501A1/8	6083
5-1437622-2	KN501B1/4	6083
5-1437622-3	KN501B1/8	6083
5-1437622-4	KN501BA1/4	6083
5-1437622-5	KN501BA1/8	6083
5-1437622-6	KN5700A1/4	6084
5-1437622-7	KN5700B1/4	6084
5-1437622-8	KN700A1/4	6084
5-1437622-9	KN700AB1/4	6084
6-1437622-0	KN700B1/4	6084
6-1437622-1	KN700BA1/4	6084
6-1437622-2	KN701A1/4	6083
6-1437622-3	KN701B1/4	6083
6-1437622-4	KN701BA1/4	6083
6-1437622-5	KN701BA1/8	6083
6-1437622-6	KN900A1/4	6083
6-1437622-7	KN900AB1/4	6084
6-1437622-8	KN900B1/4	6083
6-1437622-9	KN900BA1/4	6084
7-1437622-2	KNS501A1/4	6084
7-1437622-3	KNS501A1/8	6084
7-1437622-4	KNS501B1/4	6084
7-1437622-5	KNS501B1/8	6084
7-1437622-6	KNS501BA1/4	6084
7-1437622-7	KNS501BA1/8	6084
7-1437622-8	KNS701A1/4	6084
7-1437622-9	KNS701B1/4	6084
8-1437622-0	KNS701BA1/4	6084
8-1437622-1	KNS701BA1/8	6084
9-1437622-0	KPN500A1/4	6084
9-1437622-1	KPN500A1/8	6084
9-1437622-2	KPN500B1/4	6084
9-1437622-3	KPN500B1/8	6084
9-1437622-5	KPN700A1/4	6084
9-1437622-6	KPN700B1/4	6084
9-1437622-7	KPN900A1/4	6084
9-1437622-9	KPN900B1/4	6084
1437623-2	KS500A1/4	6084
1437623-3	KS500A1/8	6084
1437623-4	KS500B1/4	6084
1437623-5	KS500B1/8	6084
1437623-6	KS700A1/4	6084
1437623-7	KS700B1/4	6084
1437623-8	KS900A1/4	6084
1437623-9	KS900B1/4	6084
1-1437623-2	KT500A1/4	6085
1-1437623-3	KT500B1/4	6085
1-1437623-4	KT500B1/8	6085
1-1437623-6	KT700A1/4	6085
1-1437623-7	KT700B1/4	6085
1-1437623-8	KT900A1/4	6085
1-1437623-9	KT900B1/4	6085
2-1437623-1	KU401B1/8	6085
2-1437623-2	KU402B1/8	6085
2-1437623-3	KU500B1/8	6085
2-1437623-4	KU700B1/4	6085
2-1437623-9	KUS402B1/8	6085
3-1437623-0	KUS500B1/8	6085
3-1437623-1	KUS700B1/4	6085
1437624-1	PH14171/4	6086
1437624-2	PH15181/4	6086
1437624-3	PK1100B1/4	6086
1437624-4	PK1100B1/8	6086
1437624-5	PK1108B1/4	6086
1437624-6	PK50B1/4	6086
1437624-7	PK50B1/8	6086
1437624-8	PK70B1/4	6086
1437624-9	PK90B1/4	6086
1-1437624-0	PKA50B1/4	6087
1-1437624-1	PKA50B1/8	6087
1-1437624-4	PKA55B1/8	6087
1-1437624-5	PKA70B1/4	6087
1-1437624-7	PKA90B1/4	6087
1-1437624-8	PKAP50B1/4	6087
1-1437624-9	PKAP50B1/8	6087
2-1437624-0	PKAP70B1/4	6087
2-1437624-2	PKAP90B1/4	6087
2-1437624-3	PKB70B1/4	6088
2-1437624-4	PKB90B1/4	6088
2-1437624-5	PKD100B1/4	6088
2-1437624-6	PKD100B101/4	6088
2-1437624-7	PKD60B1/4	6088
2-1437624-8	PKD60B1/8	6088
2-1437624-9	PKD60B101/4	6088
3-1437624-0	PKD60B101/8	6088
3-1437624-1	PKD70B1/4	6088
3-1437624-2	PKD70B101/4	6088
3-1437624-3	PKDT100B1/4	6089
3-1437624-4	PKDT100B101/4	6089
3-1437624-5	PKDT60B1/4	6089
3-1437624-6	PKDT60B1/8	6089
3-1437624-7	PKDT60B101/4	6089
3-1437624-8	PKDT60B101/8	6089
3-1437624-9	PKDT70B1/4	6089
4-1437624-0	PKDT70B101/4	6089
4-1437624-3	PKE60B1/4	6089
4-1437624-4	PKE60B1/8	6089
4-1437624-5	PKE90B1/4	6089
4-1437624-6	PKES120B1/4	6089
4-1437624-7	PKES140B1/4	6089
4-1437624-8	PKES150B1/4	6089
5-1437624-0	PKES60B1/4	6089
5-1437624-1	PKES60B1/8	6089
5-1437624-2	PKES70B1/4	6089
5-1437624-3	PKES90B1/4	6089
5-1437624-4	PKF50B1/4	6090
5-1437624-5	PKF50B1/8	6090
5-1437624-6	PKF70B1/4	6090
5-1437624-9	PKG40B1/8	6090
6-1437624-0	PKG50B1/4	6090
6-1437624-1	PKG50B1/8	6090
6-1437624-5	PKG60B1/4	6091
6-1437624-6	PKG60B1/8	6091
6-1437624-7	PKG70B1/4	6091
6-1437624-8	PKG70B1/8	6091
6-1437624-9	PKG90B1/4	6091
7-1437624-0	PKG90B1/8	6091
7-1437624-1	PKGP100B1/4	6091
7-1437624-2	PKGP70B1/4	6091
7-1437624-3	PKGP90B1/4	6091
7-1437624-4	PKJ50B1/4	6091
7-1437624-5	PKJ50B1/8	6091
7-1437624-6	PKJ60B1/4	6091
7-1437624-7	PKJ70B1/4	6091
7-1437624-8	PKJT50B1/4	6092
7-1437624-9	PKJT50B1/8	6092
8-1437624-0	PKJT60B1/4	6092
8-1437624-1	PKJT70B1/4	6092
8-1437624-2	PKN60B1/8	6092
8-1437624-3	PKN70B1/4	6092
8-1437624-4	PKN90B1/4	6092
8-1437624-5	PKNT60B1/4	6092
8-1437624-6	PKNT60B1/8	6092
8-1437624-7	PKNT70B1/4	6092
8-1437624-8	PKNT90B1/4	6092
9-1437624-0	PKP194B1/4	6087
9-1437624-1	PKR125B1/4	6092
9-1437624-2	PKR175B1/4	6092
9-1437624-5	PKS1104B1/4	6093
9-1437624-6	PKS1105B101/4	6093
9-1437624-7	PKS1106B1/4	6093
9-1437624-8	PKS1132B1/4	6093
9-1437624-9	PKS1132B101/4	6093
1437625-1	PKS1132B51/4	6093
1437625-2	PKS1132B91/4	6093
1437625-5	PKS90B1/4	6094
1437625-6	PKS90B101/4	6094
1437625-7	PKT100B1/4	6086
1437625-8	PKT60B1/4	6086
1437625-9	PKT60B1/8	6086
1-1437625-0	PKT70B1/4	6086
1-1437625-1	PKX100B1/4	6094
1-1437625-2	PKX110B1/4	6094
1-1437625-3	PKX130B1/4	6094
1-1437625-4	PKX50B1/4	6094
1-1437625-5	PKX50B1/8	6094
1-1437625-6	PKX60B1/4	6094
1-1437625-7	PKX60B1/8	6094
1-1437625-8	PKX80B1/4	6094
2-1437627-9	C14	6062
3-1437627-0	C14L	6062
5-1437627-5	C330-AG	6059
5-1437627-6	C332	6059
5-1437627-8	C339	6059
8-1437627-4	G12KA	6062
8-1437627-5	G12KB	6062
8-1437627-6	G12KC	6062
8-1437627-7	G13A	6062
8-1437627-8	G13B	6062
8-1437627-9	G13C	6062

Products for Industrial & Commercial Applications

Dimensions are shown for reference purposes only.

Dimensions are in inches and millimeters unless otherwise specified. Values in brackets are metric equivalents.

Specifications subject to change.

Technical Support Center
1-800-522-6752
www.tycoelectronics.com

Tyco Part Number	Acquired Part Number	Page Number
9-1437627-0	G13KA	6062
9-1437627-1	G13KB	6062
9-1437627-2	G13KC	6062
9-1437627-3	G15	6062
1-1437630-8	SPS121151RG	6028
7-1437644-1	TC2-02-AG	8077
7-1437644-2	TC2-03-AG	8077
7-1437644-3	TC2-05-AG	8077
7-1437644-4	TC2-06-AG	8077
7-1437644-5	TC2-08-AG	8077
7-1437644-6	TC2-10-AG	8077
7-1437644-7	TC2-13-AG	8077
7-1437644-8	TC3-02-AG	8077
7-1437644-9	TC3-03-AG	8077
8-1437644-0	TC3-04-AG	8077
8-1437644-1	TC3-06-AG	8077
8-1437644-2	TC3-07-AG	8077
8-1437644-3	TC3-08-AG	8077
8-1437644-4	TC3-12-AG	8077
8-1437644-5	TC3-20-AG	8077
9-1437644-0	TC8-09-AG	8077
9-1437644-2	TC9-02-AG	8077
9-1437644-3	TC9-03-AG	8077
9-1437644-4	TC9-04-AG	8077
9-1437644-6	TC9-05-AG	8077
9-1437644-8	TC9-06-AG	8077
9-1437644-9	TC9-07-AG	8077
1437645-1	TC9-08-AG	8077
1437645-2	TC9-09-AG	8077
1437645-4	TC9-14-AG	8077
1437645-5	TC9-18-AG	8077
1437645-6	TR1	8086
1437645-7	TC8-05-AG	8077
1437645-8	TC4-05	8077
1-1437645-0	TC6-05	8077
1-1437645-1	TC4-06	8077
1-1437645-2	TC4-28	8077
1-1437645-3	TC6-03	8077
1-1437645-4	TC8-02-AG	8077
1-1437645-5	TC8-03-AG	8077
1-1437645-6	TC8-06-AG	8077
1-1437645-7	TC4-18	8077
1-1437645-9	TC4-03	8077
2-1437645-0	TC4-14	8077
2-1437645-1	TC9-11-AG	8077
1437646-1	3PCR-02	8050, 8053, 8054, 8055
1437646-2	3PCR-02-004	8050, 8053, 8054, 8055
1437646-3	3PCR-03	8050, 8053, 8054, 8055
1437646-4	3PCR-03-004	8050, 8053, 8054, 8055
1437646-5	3PCR-04	8050, 8053, 8054, 8055
1437646-6	3PCR-04-004	8050, 8053, 8054, 8055
1437646-7	3PCR-05	8050, 8053, 8054, 8055
1437646-8	3PCR-05-004	8050, 8053, 8054, 8055
1437646-9	3PCR-05-006	8050, 8053, 8054, 8055
1-1437646-0	3PCR-06	8050, 8053, 8054, 8055
1-1437646-1	3PCR-06-004	8050, 8053, 8054, 8055
1-1437646-2	3PCR-06-006	8050, 8053, 8054, 8055
1-1437646-3	3PCR-06-276	8050, 8053, 8054, 8055
1-1437646-4	3PCR-07	8050, 8053, 8054, 8055
1-1437646-5	3PCR-07-004	8050, 8053, 8054, 8055
1-1437646-6	3PCR-08	8050, 8053, 8054, 8055
1-1437646-7	3PCR-09	8050, 8053, 8054, 8055
1-1437646-8	3PCR-09-004	8050, 8053, 8054, 8055
1-1437646-9	3PCR-09	8050, 8053, 8054, 8055
2-1437646-0	3PCR-10	8050, 8053, 8054, 8055
2-1437646-1	3PCR-11	8050, 8053, 8054, 8055
2-1437646-2	3PCR-12	8050, 8053, 8054, 8055
2-1437646-3	3PCR-12-004	8050, 8053, 8054, 8055
2-1437646-4	3PCR-16	8050, 8053, 8054, 8055
2-1437646-5	3PCR-18	8050, 8053, 8054, 8055
2-1437646-6	3PCR-19	8050, 8053, 8054, 8055
2-1437646-7	3PCR-20	8050, 8053, 8054, 8055
2-1437646-8	3PCR-23	8050, 8053, 8054, 8055
2-1437646-9	3PCR-30	8050, 8053, 8054, 8055
3-1437646-0	3PCR-30-004	8050, 8053, 8054, 8055
3-1437646-1	3PCV-02	8050, 8053, 8054, 8055
3-1437646-2	3PCV-02-004	8050, 8053, 8054, 8055
3-1437646-3	3PCV-02-006	8050, 8053, 8054, 8055
3-1437646-4	3PCV-02-008	8050, 8053, 8054, 8055
3-1437646-7	3PCV-03	8050, 8053, 8054, 8055
3-1437646-8	3PCV-03-004	8050, 8053, 8054, 8055
3-1437646-9	3PCV-03-006	8050, 8053, 8054, 8055
4-1437646-0	3PCV-04	8050, 8053, 8054, 8055
4-1437646-1	3PCV-04-004	8050, 8053, 8054, 8055
4-1437646-2	3PCV-04-006	8050, 8053, 8054, 8055
4-1437646-3	3PCV-05	8050, 8053, 8054, 8055
4-1437646-4	3PCV-05-004	8050, 8053, 8054, 8055
4-1437646-5	3PCV-05-006	8050, 8053, 8054, 8055
4-1437646-8	3PCV-06	8050,D190 8053, 8054, 8055
4-1437646-9	3PCV-06-004	8050, 8053, 8054, 8055
5-1437646-0	3PCV-06-006	8050, 8053, 8054, 8055
5-1437646-2	3PCV-07	8050, 8053, 8054, 8055
5-1437646-3	3PCV-07-004	8050, 8053, 8054, 8055
5-1437646-4	3PCV-07-006	8050, 8053, 8054, 8055
5-1437646-5	3PCV-08	8050, 8053, 8054, 8055
5-1437646-6	3PCV-08-004	8050, 8053, 8054, 8055
5-1437646-7	3PCV-08-006	8050, 8053, 8054, 8055
5-1437646-8	3PCV-09	8050, 8053, 8054, 8055
5-1437646-9	3PCV-09-006	8050, 8053, 8054, 8055
6-1437646-0	3PCV-10	8050, 8053, 8054, 8055
6-1437646-1	3PCV-10-004	8050, 8053, 8054, 8055
6-1437646-2	3PCV-10-006	8050, 8053, 8054, 8055
6-1437646-3	3PCV-11	8050, 8053, 8054, 8055
6-1437646-4	3PCV-11-004	8050, 8053, 8054, 8055
6-1437646-5	3PCV-12	8050, 8053, 8054, 8055
6-1437646-6	3PCV-12-004	8050, 8053, 8054, 8055
6-1437646-7	3PCV-12-006	8050, 8053, 8054, 8055
6-1437646-9	3PCV-13	8050, 8053, 8054, 8055
7-1437646-0	3PCV-13-004	8050, 8053, 8054, 8055
7-1437646-1	3PCV-14	8050, 8053, 8054, 8055
7-1437646-2	3PCV-14-004	8050, 8053, 8054, 8055
7-1437646-3	3PCV-14-006	8050, 8053, 8054, 8055
7-1437646-4	3PCV-15	8050, 8053, 8054, 8055
7-1437646-5	3PCV-15-006	8050, 8053, 8054, 8055
7-1437646-6	3PCV-16	8050, 8053, 8054, 8055
7-1437646-7	3PCV-16-004	8050, 8053, 8054, 8055
7-1437646-8	3PCV-16-006	8050, 8053, 8054, 8055
8-1437646-1	3PCV-17	8050, 8053, 8054, 8055
8-1437646-2	3PCV-18	8050, 8053, 8054, 8055
8-1437646-3	3PCV-20	8050, 8053, 8054, 8055
8-1437646-4	3PCV-20-004	8050, 8053, 8054, 8055
8-1437646-5	3PCV-21	8050, 8053, 8054, 8055
8-1437646-6	3PCV-21-004	8050, 8053, 8054, 8055
8-1437646-7	3PCV-22	8050, 8053, 8054, 8055
8-1437646-8	3PCV-22-004	8050, 8053, 8054, 8055
8-1437646-9	3PCV-23	8050, 8053, 8054, 8055
9-1437646-0	3PCV-24	8050, 8053, 8054, 8055
9-1437646-1	3PCV-26	8050, 8053, 8054, 8055
9-1437646-2	3PCV-27	8050, 8053, 8054, 8055
9-1437646-3	3PCV-28	8050, 8053, 8054, 8055
9-1437646-4	3PCV-29	8050, 8053, 8054, 8055
9-1437646-5	3PCV-30	8050, 8053, 8054, 8055
9-1437646-6	3PCV-31	8050, 8053, 8054, 8055
9-1437646-7	3PCV-32	8050, 8053, 8054, 8055
9-1437646-8	3STR-02-004	8050, 8053, 8054, 8055
9-1437646-9	3STR-03	8050, 8053, 8054, 8055
1437647-1	3STR-04	8050, 8053, 8054, 8055
1437647-2	3STR-04-004	8050, 8053, 8054, 8055
1437647-3	3STR-05	8050, 8053, 8054, 8055
1437647-4	3STR-05-004	8050, 8053, 8054, 8055
1437647-5	3STR-06	8050, 8053, 8054, 8055
1437647-6	3STR-07-004	8050, 8053, 8054, 8055
1437647-7	3STR-08	8050, 8053, 8054, 8055
1437647-8	3STR-09	8050, 8053, 8054, 8055
1437647-9	3STR-10	8050, 8053, 8054, 8055
1-1437647-0	3STR-10-004	8050, 8053, 8054, 8055
1-1437647-1	3STR-12	8050, 8053, 8054, 8055
1-1437647-2	3STR-14	8050, 8053, 8054, 8055
1-1437647-4	3STR-15	8050, 8053, 8054, 8055
1-1437647-5	3STR-17	8050, 8053, 8054, 8055
1-1437647-6	3STR-28	8050, 8053, 8054, 8055
1-1437647-7	3STV-02	8050, 8053, 8054, 8055
1-1437647-8	3STV-03	8050, 8053, 8054, 8055
1-1437647-9	3STV-04	8050, 8053, 8054, 8055
2-1437647-0	3STV-04-004	8050, 8053, 8054, 8055
2-1437647-1	3STV-05	8050, 8053, 8054, 8055
2-1437647-2	3STV-05-001	8050, 8053, 8054, 8055
2-1437647-3	3STV-06	8050, 8053, 8054, 8055
2-1437647-4	3STV-07	8050, 8053, 8054, 8055
2-1437647-5	3STV-08	8050, 8053, 8054, 8055
2-1437647-6	3STV-09	8050, 8053, 8054, 8055
2-1437647-7	3STV-10	8050, 8053, 8054, 8055
2-1437647-8	3STV-11	8050, 8053, 8054, 8055
2-1437647-9	3STV-12	8050, 8053, 8054, 8055
3-1437647-0	3STV-15	8050, 8053, 8054, 8055
3-1437647-1	3STV-16	8050, 8053, 8054, 8055
3-1437647-2	3STV-20	8050, 8053, 8054, 8055
7-1437647-6	3STR-10-005	8050, 8053, 8054, 8055
7-1437647-7	3PCV-06-008	8050, 8053, 8054, 8055
7-1437647-8	3PCR-06-001	8050, 8053, 8054, 8055
1437656-6	NC6-P104-14	8051, 8068, 8069
1437657-7	8DBL-02	8050, 8063, 8064, 8065
1437657-8	8DBL-02-006	8050, 8063, 8064, 8065
1437657-9	8DBL-02-007	8050, 8063, 8064, 8065
1-1437657-0	8DBL-03	8050, 8063, 8064, 8065
1-1437657-1	8DBL-03-006	8050, 8063, 8064, 8065
1-1437657-2	8DBL-04	8050, 8063, 8064, 8065
1-1437657-3	8DBL-04-006	8050, 8063, 8064, 8065
1-1437657-4	8DBL-04-007	8050, 8063, 8064, 8065
1-1437657-5	8DBL-05	8050, 8063, 8064, 8065
1-1437657-6	8DBL-06	8050, 8063, 8064, 8065
1-1437657-7	8DBL-06-006	8050, 8063, 8064, 8065
1-1437657-8	8DBL-06-007	8050, 8063, 8064, 8065
1-1437657-9	8DBL-07	8050, 8063, 8064, 8065
2-1437657-0	8PCR-02	8050, 8063, 8064, 8065
2-1437657-1	8PCR-02-001	8050, 8063, 8064, 8065
2-1437657-2	8PCR-02-006	8050, 8063, 8064, 8065
2-1437657-5	8PCR-03	8050, 8063, 8064, 8065
2-1437657-6	8PCR-03-001	8050, 8063, 8064, 8065
2-1437657-7	8PCR-03-005	8050, 8063, 8064, 8065
2-1437657-8	8PCR-03-006	8050, 8063, 8064, 8065
2-1437657-9	8PCR-04	8050, 8063, 8064, 8065
3-1437657-0	8PCR-04-001	8050, 8063, 8064, 8065
3-1437657-1	8PCR-04-006	8050, 8063, 8064, 8065
3-1437657-2	8PCR-04-008	8050, 8063, 8064, 8065
3-1437657-3	8PCR-05	8050, 8063, 8064, 8065
3-1437657-4	8PCR-05-007	8050, 8063, 8064, 8065
3-1437657-5	8PCR-06	8050, 8063, 8064, 8065
3-1437657-6	8PCR-06-001	8050, 8063, 8064, 8065
3-1437657-7	8PCR-06-006	8050, 8063, 8064, 8065
3-1437657-8	8PCR-06-007	8050, 8063, 8064, 8065
3-1437657-9	8PCR-06-008	8050, 8063, 8064, 8065
4-1437657-0	8PCR-07	8050, 8063, 8064, 8065
4-1437657-2	8PCR-08	8050, 8063, 8064, 8065
4-1437657-3	8PCR-08-006	8050, 8063, 8064, 8065
4-1437657-4	8PCR-08-007	8050, 8063, 8064, 8065
4-1437657-5	8PCR-10	8050, 8063, 8064, 8065
4-1437657-6	8PCR-10-001	8050, 8063, 8064, 8065
4-1437657-7	8PCR-11-007	8050, 8063, 8064, 8065
4-1437657-8	8PCR-12	8050, 8063, 8064, 8065
4-1437657-9	8PCR-12-001	8050, 8063, 8064, 8065
5-1437657-0	8PCR-12-007	8050, 8063, 8064, 8065
5-1437657-1	8PCR-18	8050, 8063, 8064, 8065
5-1437657-2	8PCV-02	8050, 8063, 8064, 8065
5-1437657-3	8PCV-02-001	8050, 8063, 8064, 8065
5-1437657-4	8PCV-02-004	8050, 8063, 8064, 8065
5-1437657-5	8PCV-02-005	8050, 8063, 8064, 8065
5-1437657-7	8PCV-02-006	8050, 8063, 8064, 8065
6-1437657-5	8PCV-03	8050, 8063, 8064, 8065
6-1437657-6	8PCV-03-001	8050, 8063, 8064, 8065
6-1437657-7	8PCV-03-004	8050, 8063, 8064, 8065
6-1437657-8	8PCV-03-005	8050, 8063, 8064, 8065
6-1437657-9	8PCV-03-006	8050, 8063, 8064, 8065
7-1437657-0	8PCV-03-007	8050, 8063, 8064, 8065
7-1437657-1	8PCV-03-008	8050, 8063, 8064, 8065
7-1437657-6	8PCV-04	8050, 8063, 8064, 8065
7-1437657-7	8PCV-04-001	8050, 8063, 8064, 8065
7-1437657-8	8PCV-04-004	8050, 8063, 8064, 8065
7-1437657-9	8PCV-04-005	8050, 8063, 8064, 8065
8-1437657-0	8PCV-04-006	8050, 8063, 8064, 8065
8-1437657-1	8PCV-04-008	8050, 8063, 8064, 8065
8-1437657-4	8PCV-05	8050, 8063, 8064, 8065
8-1437657-5	8PCV-05-001	8050, 8063, 8064, 8065
8-1437657-6	8PCV-05-004	8050, 8063, 8064, 8065

Products for Industrial & Commercial Applications

Dimensions are shown for reference purposes only.

Dimensions are in inches and millimeters unless otherwise specified. Values in brackets are metric equivalents.

Specifications subject to change.

Technical Support Center
1-800-522-6752
www.tycoelectronics.com

Tyco Part Number	Acquired Part Number	Page Number
8-1437657-7	8PCV-05-005	8050, 8063, 8064, 8065
8-1437657-8	8PCV-05-006	8050, 8063, 8064, 8065
9-1437657-0	8PCV-05-007	8050, 8063, 8064, 8065
9-1437657-1	8PCV-05-008	8050, 8063, 8064, 8065
9-1437657-5	8PCV-06	8050, 8063, 8064, 8065
9-1437657-6	8PCV-06-001	8050, 8063, 8064, 8065
9-1437657-7	8PCV-06-004	8050, 8063, 8064, 8065
9-1437657-8	8PCV-06-006	8050, 8063, 8064, 8065
1437658-1	8PCV-06-007	8050, 8063, 8064, 8065
1437658-2	8PCV-06-008	8050, 8063, 8064, 8065
1437658-9	8PCV-07	8050, 8063, 8064, 8065
1-1437658-0	8PCV-07-001	8050, 8063, 8064, 8065
1-1437658-1	8PCV-07-006	8050, 8063, 8064, 8065
1-1437658-7	8PCV-08	8050, 8063, 8064, 8065
1-1437658-8	8PCV-08-001	8050, 8063, 8064, 8065
2-1437658-0	8PCV-08-004	8050, 8063, 8064, 8065
2-1437658-1	8PCV-08-006	8050, 8063, 8064, 8065
2-1437658-3	8PCV-08-007	8050, 8063, 8064, 8065
2-1437658-4	8PCV-08-009	8050, 8063, 8064, 8065
2-1437658-8	8PCV-09	8050, 8063, 8064, 8065
2-1437658-9	8PCV-10	8050, 8063, 8064, 8065
3-1437658-0	8PCV-10-001	8050, 8063, 8064, 8065
3-1437658-1	8PCV-10-004	8050, 8063, 8064, 8065
3-1437658-2	8PCV-10-005	8050, 8063, 8064, 8065
3-1437658-3	8PCV-10-006	8050, 8063, 8064, 8065
3-1437658-7	8PCV-11	8050, 8063, 8064, 8065
3-1437658-8	8PCV-11-001	8050, 8063, 8064, 8065
3-1437658-9	8PCV-11-004	8050, 8063, 8064, 8065
4-1437658-0	8PCV-11-006	8050, 8063, 8064, 8065
4-1437658-1	8PCV-11-007	8050, 8063, 8064, 8065
4-1437658-2	8PCV-12	8050, 8063, 8064, 8065
4-1437658-3	8PCV-12-001	8050, 8063, 8064, 8065
4-1437658-4	8PCV-12-004	8050, 8063, 8064, 8065
4-1437658-5	8PCV-12-006	8050, 8063, 8064, 8065
4-1437658-7	8PCV-12-007	8050, 8063, 8064, 8065
4-1437658-8	8PCV-12-009	8050, 8063, 8064, 8065
5-1437658-4	8PCV-13	8050, 8063, 8064, 8065
5-1437658-5	8PCV-13-006	8050, 8063, 8064, 8065
5-1437658-6	8PCV-13-007	8050, 8063, 8064, 8065
5-1437658-8	8PCV-14	8050, 8063, 8064, 8065
5-1437658-9	8PCV-14-001	8050, 8063, 8064, 8065
6-1437658-0	8PCV-14-006	8050, 8063, 8064, 8065
6-1437658-2	8PCV-15	8050, 8063, 8064, 8065
6-1437658-3	8PCV-15-005	8050, 8063, 8064, 8065
6-1437658-4	8PCV-16	8050, 8063, 8064, 8065
6-1437658-5	8PCV-16-001	8050, 8063, 8064, 8065
6-1437658-6	8PCV-16-006	8050, 8063, 8064, 8065
6-1437658-8	8PCV-17	8050, 8063, 8064, 8065
6-1437658-9	8PCV-18	8050, 8063, 8064, 8065
7-1437658-0	8PCV-18-001	8050, 8063, 8064, 8065
7-1437658-1	8PCV-18-004	8050, 8063, 8064, 8065
7-1437658-2	8PCV-18-006	8050, 8063, 8064, 8065
7-1437658-4	8PCV-19	8050, 8063, 8064, 8065
7-1437658-5	8PCV-20	8050, 8063, 8064, 8065
7-1437658-6	8PCV-20-001	8050, 8063, 8064, 8065
7-1437658-7	8PCV-20-00	8050, 8063, 8064, 8065
7-1437658-9	8PCV-21	8050, 8063, 8064, 8065
8-1437658-0	8PCV-21-001	8050, 8063, 8064, 8065
8-1437658-1	8PCV-22	8050, 8063, 8064, 8065
8-1437658-2	8PCV-24	8050, 8063, 8064, 8065
8-1437658-3	8PCV-24-004	8050, 8063, 8064, 8065
8-1437658-4	8PCV-24-005	8050, 8063, 8064, 8065
8-1437658-5	8PCV-25-004	8050, 8063, 8064, 8065
8-1437658-6	8PCV-26-001	8050, 8063, 8064, 8065
8-1437658-7	8QCR-02	8050, 8063, 8064, 8065
8-1437658-8	8QCR-02-004	8050, 8063, 8064, 8065
8-1437658-9	8QCR-02-302	8050, 8063, 8064, 8065
9-1437658-0	8QCR-03	8050, 8063, 8064, 8065
9-1437658-1	8QCR-03-004	8050, 8063, 8064, 8065
9-1437658-5	8QCR-04	8050, 8063, 8064, 8065
9-1437658-6	8QCR-04-004	8050, 8063, 8064, 8065
1437659-2	8QCR-05	8050, 8063, 8064, 8065
1437659-4	8QCR-06	8050, 8063, 8064, 8065
1437659-5	8QCR-06-004	8050, 8063, 8064, 8065
1437659-6	8QCR-06-006	8050, 8063, 8064, 8065
1437659-8	8QCV-02	8050, 8063, 8064, 8065
1437659-9	8QCV-02-004	8050, 8063, 8064, 8065
1-1437659-0	8QCV-02-005	8050, 8063, 8064, 8065
1-1437659-1	8QCV-02-006	8050, 8063, 8064, 8065
1-1437659-2	8QCV-02-008	8050, 8063, 8064, 8065
1-1437659-5	8QCV-03	8050, 8063, 8064, 8065
1-1437659-6	8QCV-03-002	8050, 8063, 8064, 8065
1-1437659-9	8QCV-04	8050, 8063, 8064, 8065
2-1437659-0	8QCV-04-006	8050, 8063, 8064, 8065
2-1437659-1	8QCV-05	8050, 8063, 8064, 8065
2-1437659-2	8QCV-05-006	8050, 8063, 8064, 8065
2-1437659-4	8QCV-06	8050, 8063, 8064, 8065
2-1437659-5	8QCV-07	8050, 8063, 8064, 8065
2-1437659-6	8QCV-08	8050, 8063, 8064, 8065
2-1437659-8	8QCV-09	8050, 8063, 8064, 8065
2-1437659-9	8QCV-10	8050, 8063, 8064, 8065
3-1437659-0	8QCV-10-006	8050, 8063, 8064, 8065
3-1437659-1	8QCV-11-006	8050, 8063, 8064, 8065
3-1437659-3	8STR-02	8050, 8063, 8064, 8065
3-1437659-4	8STR-03	8050, 8063, 8064, 8065
3-1437659-5	8STR-03-004	8050, 8063, 8064, 8065
3-1437659-6	8STR-03-006	8050, 8063, 8064, 8065
3-1437659-7	8STR-04	8050, 8063, 8064, 8065
3-1437659-8	8STR-05	8050, 8063, 8064, 8065
3-1437659-9	8STR-05-004	8050, 8063, 8064, 8065
4-1437659-0	8STR-06-004	8050, 8063, 8064, 8065
4-1437659-1	8STR-07	8050, 8063, 8064, 8065
4-1437659-2	8STR-08	8050, 8063, 8064, 8065
4-1437659-3	8STR-10-004	8050, 8063, 8064, 8065
4-1437659-4	8STR-12	8050, 8063, 8064, 8065
4-1437659-5	8STV-02	8050, 8063, 8064, 8065
4-1437659-6	8STV-03	8050, 8063, 8064, 8065
4-1437659-7	8STV-03-004	8050, 8063, 8064, 8065
4-1437659-8	8STV-03-006	8050, 8063, 8064, 8065
5-1437659-0	8STV-04	8050, 8063, 8064, 8065
5-1437659-1	8STV-04-004	8050, 8063, 8064, 8065
5-1437659-2	8STV-04-006	8050, 8063, 8064, 8065
5-1437659-3	8STV-05	8050, 8063, 8064, 8065
5-1437659-4	8STV-05-001	8050, 8063, 8064, 8065
5-1437659-6	8STV-06	8050, 8063, 8064, 8065
6-1437659-0	8STV-07	8050, 8063, 8064, 8065
6-1437659-1	8STV-08	8050, 8063, 8064, 8065
6-1437659-2	8STV-09	8050, 8063, 8064, 8065
6-1437659-3	8STV-09-006	8050, 8063, 8064, 8065
6-1437659-4	8STV-10-006	8050, 8063, 8064, 8065
6-1437659-5	8STV-12-004	8050, 8063, 8064, 8065
6-1437659-6	8STV-12-006	8050, 8063, 8064, 8065
6-1437659-7	8STV-14	8050, 8063, 8064, 8065
6-1437659-8	8STV-15	8050, 8063, 8064, 8065
6-1437659-9	8STV-16	8050, 8063, 8064, 8065
7-1437659-0	8STV-20	8050, 8063, 8064, 8065
7-1437659-1	8STV-24	8050, 8063, 8064, 8065
7-1437659-2	8TBV-04-006	8050, 8063, 8064, 8065
7-1437659-4	8WWR-03	8050, 8063, 8064, 8065
7-1437659-6	8WWV-02	8050, 8063, 8064, 8065
7-1437659-7	8WWV-03	8050, 8063, 8064, 8065
8-1437659-4	8WWV-04	8050, 8063, 8064, 8065
8-1437659-5	8WWV-04-004	8050, 8063, 8064, 8065
8-1437659-6	8WWV-04-006	8050, 8063, 8064, 8065
8-1437659-8	8WWV-05	8050, 8063, 8064, 8065
8-1437659-9	8WWV-05-006	8050, 8063, 8064, 8065
9-1437659-0	8WWV-05-008	8050, 8063, 8064, 8065
9-1437659-1	8WWV-06-006	8050, 8063, 8064, 8065
1437660-2	8WWV-19	8050, 8063, 8064, 8065
1437660-3	8WWV-20-004	8050, 8063, 8064, 8065
1437660-9	8WWV-19-002	8050, 8063, 8064, 8065
1-1437660-2	8STR-08-001	8050, 8063, 8064, 8065
1-1437660-4	8QCV-02-001	8050, 8063, 8064, 8065
1-1437660-9	8QCV-05-002	8050, 8063, 8064, 8065
1437661-8	TC4-02-PF	8077
1437661-9	TC4-02-PFH	8077
1-1437661-0	TC4-03-PF	8077
1-1437661-1	TC4-03-PF-CL	8077
1-1437661-2	TC4-03-PFH	8077
1-1437661-3	TC4-04-PF	8077
1-1437661-4	TC4-04-PFH	8077
1-1437661-5	TC4-05-PF	8077
1-1437661-6	TC4-05-PFH	8077
1-1437661-7	TC4-06-PF	8077
1-1437661-8	TC4-06-PFH	8077
1-1437661-9	TC4-07-PF	8077
2-1437661-0	TC4-07-PFH	8077
2-1437661-1	TC4-08-PF	8077
2-1437661-2	TC4-08-PFH	8077
2-1437661-2	TC4-08-PFH	8077
2-1437661-3	TC4-09-PFH	8077
2-1437661-4	TC4-10-PF	8077
2-1437661-5	TC4-10-PFH	8077
2-1437661-6	TC4-12-PF-CL	8077
2-1437661-7	TC6-02-PFH	8077
2-1437661-8	TC6-03-PF	8077
2-1437661-9	TC6-03-PFH	8077
3-1437661-0	TC6-03-PFH-CL	8077
3-1437661-1	TC6-04-PF	8077
3-1437661-2	TC6-04-PFH	8077
3-1437661-3	TC6-05-PF	8077
3-1437661-4	TC6-05-PFH	8077
3-1437661-5	TC6-06-PF	8077
3-1437661-6	TC6-06-PF-CL	8077
3-1437661-7	TC6-06-PFH	8077
3-1437661-8	TC6-07-PFH	8077
3-1437661-9	TC6-08-PF	8077
4-1437661-0	TC6-08-PFH	8077
4-1437661-1	TC6-08-PFH-CL	8077
4-1437661-2	TC6-09-PFH	8077
4-1437661-3	TC6-10-PF	8077
4-1437661-4	TC6-10-PFH	8077
4-1437661-5	TC6-12-PFH	8077
4-1437661-6	TC6-15-PFH	8077
4-1437661-7	TC6-16-PFH	8077
4-1437661-8	TC8-02-PF	8077
4-1437661-9	TC8-03-PF	8077
5-1437661-0	TC8-03-PFH	8077
5-1437661-1	TC8-04-PF	8077
5-1437661-2	TC8-04-PFH	8077
5-1437661-3	TC8-05-PF	8077
5-1437661-4	TC8-05-PFH	8077
5-1437661-5	TC8-06-PF	8077
5-1437661-6	TC8-06-PFH	8077
5-1437661-7	TC8-07-PF	8077
5-1437661-8	TC8-07-PFH	8077
5-1437661-9	TC8-08-PF	8077
6-1437661-0	TC8-08-PFH	8077
6-1437661-1	TC8-10-PF	8077
6-1437661-2	TC8-10-PFH	8077
6-1437661-3	TC8-11-PFH	8077
6-1437661-3	TC8-11-PFH	8077
6-1437661-4	TKAD	8085
6-1437661-6	TC6-02-PFH-CL	8077
6-1437661-7	TC4-09-PF	8077
6-1437661-9	TC6-07-PF	8077
7-1437661-0	TC6-09-PF	8077
7-1437661-2	TC4-12-PFH	8077
7-1437661-3	TC6-10-PF-CL	8077
7-1437661-4	TC6-11-PFH	8077
7-1437661-5	TC8-02-PFH	8077
7-1437661-6	TC8-09-PF	8077
7-1437661-7	TC4-14-PFH	8077
7-1437661-8	TC4-15-PFH	8077
7-1437661-9	TC8-09-PFH	8077
1437662-1	BC6-P104-07	8050, 8059, 8060
1437662-2	BC6-P107-08	8050, 8059, 8060
1437662-4	BC6-P108-02	8050, 8059, 8060
1437662-5	BC6-P108-03	8050, 8059, 8060
1437662-8	BC6-P108-04	8050, 8059, 8060
1437662-9	BC6-P108-05	8050, 8059, 8060
1-1437662-0	BC6-P108-06	8050, 8059, 8060
1-1437662-1	BC6-P108-07	8050, 8059, 8060
1-1437662-2	BC6-P108-08	8050, 8059, 8060
1-1437662-3	BC6-P108-09	8050, 8059, 8060
1-1437662-4	BC6-P108-09-045	8050, 8059, 8060
1-1437662-5	BC6-P108-10	8050, 8059, 8060
1-1437662-6	BC6-P108-11	8050, 8059, 8060
1-1437662-7	BC6-P108-12	8050, 8059, 8060
1-1437662-8	BC6-P108-14	8050, 8059, 8060
1-1437662-9	BC6-P108-16	8050, 8059, 8060
2-1437662-0	BC6-P508-03	8050, 8059, 8060
2-1437662-1	BC6-Q208-03	8050, 8059, 8060
2-1437662-2	BC6-Q208-05	8050, 8059, 8060

Products for Industrial & Commercial Applications

Dimensions are shown for reference purposes only.

Dimensions are in inches and millimeters unless otherwise specified. Values in brackets are metric equivalents.

Specifications subject to change.

Technical Support Center
1-800-522-6752
www.tycoelectronics.com

Tyco Part Number	Acquired Part Number	Page Number
2-1437662-3	BC6-Q308-02	8050, 8059, 8060
2-1437662-4	BC6-Q308-03	8050, 8059, 8060
2-1437662-8	BC6-Q308-06	8050, 8059, 8060
2-1437662-9	BC6-Q308-10	8050, 8059, 8060
3-1437662-0	BC6-Q308-13	8050, 8059, 8060
3-1437662-1	BC6-Q308-15	8050, 8059, 8060
3-1437662-2	BC6-Q408-03	8050, 8059, 8060
3-1437662-3	BC6-Q408-10	8050, 8059, 8060
3-1437662-4	BC6-Q408-14	8050, 8059, 8060
3-1437662-5	BC6-Q508-02	8050, 8059, 8060
3-1437662-6	BC6-Q608-03	8050, 8059, 8060
3-1437662-7	BC6-Q608-03-281	8050, 8059, 8060
3-1437662-8	BC6-Q608-05	8050, 8059, 8060
3-1437662-9	BC6-Q608-06	8050, 8059, 8060
4-1437662-0	BC6-Q608-10	8050, 8059, 8060
4-1437662-1	BC6-Q608-10-280	8050, 8059, 8060
4-1437662-2	BC6-T308-03	8050, 8059, 8060
4-1437662-3	BC6-T308-03-283	8050, 8059, 8060
4-1437662-4	BC6-T404-02	8050, 8059, 8060
4-1437662-6	BC6-T408-04	8050, 8059, 8060
4-1437662-8	BC6-T408-08	8050, 8059, 8060
4-1437662-9	BC6-T608-04	8050, 8059, 8060
5-1437662-0	BC6-T608-07	8050, 8059, 8060
5-1437662-3	BC6-T608-12	8050, 8059, 8060
5-1437662-4	BC6-W108-09	8050, 8059, 8060
5-1437662-7	BC6-W407-08	8050, 8059, 8060
5-1437662-8	BC6-W408-03	8050, 8059, 8060
6-1437662-1	BC6-W408-04	8050, 8059, 8060
6-1437662-2	BC6-W408-06	8050, 8059, 8060
6-1437662-3	BC6-W408-08	8050, 8059, 8060
6-1437662-4	BC6-W408-10	8050, 8059, 8060
6-1437662-5	BC6-W408-13	8050, 8059, 8060
6-1437662-7	BC6-P108-19	8050, 8059, 8060
7-1437662-2	BC6-P104-20	8050, 8059, 8060
1437663-5	MB6-P107-02	8050, 8061, 8062
1437663-6	MB6-P107-04	8050, 8061, 8062
1437663-7	MB6-P107-06	8050, 8061, 8062
1437663-8	MB6-P107-08	8050, 8061, 8062
1437663-9	MB6-P107-10	8050, 8061, 8062
1-1437663-0	MB6-P107-12	8050, 8061, 8062
1-1437663-1	MB6-P107-14	8050, 8061, 8062
1-1437663-2	MB6-P107-16	8050, 8061, 8062
1-1437663-4	MB6-P107-18	8050, 8061, 8062
1-1437663-5	MB6-P107-20	8050, 8061, 8062
1-1437663-6	MB6-P107-22	8050, 8061, 8062
1-1437663-7	MB6-P107-24	8050, 8061, 8062
1-1437663-8	MB6-P107-26	8050, 8061, 8062
1-1437663-9	MB6-P107-28	8050, 8061, 8062
2-1437663-0	MB6-P107-30	8050, 8061, 8062
2-1437663-2	MB6-P107-32	8050, 8061, 8062
2-1437663-3	MB6-P107-34	8050, 8061, 8062
2-1437663-4	MB6-P107-36	8050, 8061, 8062
2-1437663-5	MB6-P107-38	8050, 8061, 8062
2-1437663-6	MB6-P107-40	8050, 8061, 8062
2-1437663-7	MB6-P107-46	8050, 8061, 8062
2-1437663-8	MB6-P108-04	8050, 8061, 8062
2-1437663-9	MB6-P108-06	8050, 8061, 8062
3-1437663-0	MB6-P108-08	8050, 8061, 8062
3-1437663-1	MB6-P108-10	8050, 8061, 8062
3-1437663-2	MB6-P108-12	8050, 8061, 8062
3-1437663-3	MB6-P108-14	8050, 8061, 8062
3-1437663-4	MB6-P108-16	8050, 8061, 8062
3-1437663-5	MB6-P108-18	8050, 8061, 8062
3-1437663-6	MB6-P108-20	8050, 8061, 8062
3-1437663-7	MB6-P108-22	8050, 8061, 8062
3-1437663-8	MB6-P108-24	8050, 8061, 8062
3-1437663-8	MB6-P108-24	8050, 8061, 8062
4-1437663-0	MB6-P108-26	8050, 8061, 8062
4-1437663-1	MB6-P108-28	8050, 8061, 8062
4-1437663-2	MB6-P108-30	8050, 8061, 8062
4-1437663-3	MB6-P108-32	8050, 8061, 8062
4-1437663-4	MB6-P108-34	8050, 8061, 8062
4-1437663-5	MB6-P108-36	8050, 8061, 8062
4-1437663-6	MB6-P108-38	8050, 8061, 8062
4-1437663-7	MB6-P108-40	8050, 8061, 8062
4-1437663-8	MB6-P108-50	8050, 8061, 8062
4-1437663-9	MB6-P108-60	8050, 8061, 8062
5-1437663-1	MB6-P106-24	8050, 8061, 8062

Tyco Part Number	Acquired Part Number	Page Number
1437664-3	NC6-P102-04	8051, 8068, 8069
1437664-4	NC6-P107-02	8051, 8068, 8069
1437664-5	NC6-P107-03	8051, 8068, 8069
1437664-6	NC6-P107-04	8051, 8068, 8069
1437664-7	NC6-P107-05	8051, 8068, 8069
1437664-9	NC6-P107-06	8051, 8068, 8069
1-1437664-0	NC6-P107-07	8051, 8068, 8069
1-1437664-1	NC6-P107-08	8051, 8068, 8069
1-1437664-3	NC6-P107-09	8051, 8068, 8069
1-1437664-4	NC6-P107-10	8051, 8068, 8069
1-1437664-6	NC6-P107-11	8051, 8068, 8069
1-1437664-7	NC6-P107-12	8051, 8068, 8069
1-1437664-8	NC6-P107-13	8051, 8068, 8069
2-1437664-0	NC6-P107-14	8051, 8068, 8069
2-1437664-1	NC6-P107-15	8051, 8068, 8069
2-1437664-2	NC6-P107-16	8051, 8068, 8069
2-1437664-3	NC6-P107-17	8051, 8068, 8069
2-1437664-5	NC6-P107-20	8051, 8068, 8069
2-1437664-6	NC6-P107-22	8051, 8068, 8069
2-1437664-7	NC6-P107-24	8051, 8068, 8069
2-1437664-8	NC6-P107-25	8051, 8068, 8069
3-1437664-0	NC6-P108-02	8051, 8068, 8069
3-1437664-1	NC6-P108-03	8051, 8068, 8069
3-1437664-3	NC6-P108-04	8051, 8068, 8069
3-1437664-5	NC6-P108-05	8051, 8068, 8069
3-1437664-8	NC6-P108-06	8051, 8068, 8069
3-1437664-9	NC6-P108-06-049	8051, 8068, 8069
4-1437664-0	NC6-P108-07	8051, 8068, 8069
4-1437664-1	NC6-P108-08	8051, 8068, 8069
4-1437664-2	NC6-P108-09	8051, 8068, 8069
4-1437664-4	NC6-P108-10	8051, 8068, 8069
4-1437664-6	NC6-P108-11	8051, 8068, 8069
4-1437664-7	NC6-P108-12	8051, 8068, 8069
4-1437664-8	NC6-P108-13	8051, 8068, 8069
4-1437664-9	NC6-P108-14	8051, 8068, 8069
5-1437664-0	NC6-P108-15	8051, 8068, 8069
5-1437664-1	NC6-P108-16	8051, 8068, 8069
5-1437664-2	NC6-P108-17	8051, 8068, 8069
5-1437664-3	NC6-P108-18	8051, 8068, 8069
5-1437664-4	NC6-P108-19	8051, 8068, 8069
5-1437664-5	NC6-P108-20	8051, 8068, 8069
5-1437664-6	NC6-P108-22	8051, 8068, 8069
5-1437664-7	NC6-P108-24	8051, 8068, 8069
6-1437664-2	NC6-P106-04	8051, 8068, 8069
6-1437664-3	NC6-P102-12	8051, 8068, 8069
6-1437664-4	NC6-P102-02	8051, 8068, 8089
1437667-1	4DB-P104-02	8051, 8066, 8067
1437667-2	4DB-P104-04	8051, 8066, 8067
1437667-3	4DB-P104-06	8051, 8066, 8067
1437667-4	4DB-P104-08	8051, 8066, 8067
1437667-5	4DB-P104-10	8051, 8066, 8067
1437667-6	4DB-P107-02	8051, 8066, 8067
1437667-7	4DB-P107-03	8051, 8066, 8067
1-1437667-0	4DB-P107-04	8051, 8066, 8067
1-1437667-1	4DB-P107-05	8051, 8066, 8067
1-1437667-2	4DB-P107-06	8051, 8066, 8067
1-1437667-4	4DB-P107-07	8051, 8066, 8067
1-1437667-5	4DB-P107-08	8051, 8066, 8067
1-1437667-6	4DB-P107-09	8051, 8066, 8067
1-1437667-7	4DB-P107-10	8051, 8066, 8067
1-1437667-8	4DB-P107-11	8051, 8066, 8067
1-1437667-9	4DB-P107-12	8051, 8066, 8067
2-1437667-0	4DB-P107-15	8051, 8066, 8067
2-1437667-1	4DB-P107-16	8051, 8066, 8067
2-1437667-2	4DB-P107-25	8051, 8066, 8067
2-1437667-3	4DB-P107-26	8051, 8066, 8067
2-1437667-4	4DB-P108-02	8051, 8066, 8067
2-1437667-5	4DB-P108-03	8051, 8066, 8067
2-1437667-6	4DB-P108-04	8051, 8066, 8067
2-1437667-8	4DB-P108-05	8051, 8066, 8067
2-1437667-9	4DB-P108-06	8051, 8066, 8067
3-1437667-0	4DB-P108-07	8051, 8066, 8067
3-1437667-1	4DB-P108-08	8051, 8066, 8067
3-1437667-2	4DB-P108-09	8051, 8066, 8067
3-1437667-3	4DB-P108-10	8051, 8066, 8067
3-1437667-5	4DB-P108-11	8051, 8066, 8067
3-1437667-6	4DB-P108-12	8051, 8066, 8067
3-1437667-7	4DB-P108-13	8051, 8066, 8067

Tyco Part Number	Acquired Part Number	Page Number
3-1437667-8	4DB-P108-14	8051, 8066, 8067
3-1437667-9	4DB-P108-15	8051, 8066, 8067
4-1437667-0	4DB-P108-16	8051, 8066, 8067
4-1437667-2	4DB-P108-17	8051, 8066, 8067
4-1437667-4	4DB-P108-18	8051, 8066, 8067
4-1437667-5	4DB-P108-19	8051, 8066, 8067
4-1437667-6	4DB-P108-20	8051, 8066, 8067
4-1437667-8	4DB-P108-22	8051, 8066, 8067
5-1437667-0	4DB-P108-24	8051, 8066, 8067
5-1437667-2	4DB-P108-26	8051, 8066, 8067
5-1437667-3	4DB-P108-28	8051, 8066, 8067
5-1437667-5	4DB-P108-30	8051, 8066, 8067
5-1437667-6	4DB-P207-03	8051, 8066, 8067
5-1437667-7	4DB-P207-04	8051, 8066, 8067
5-1437667-8	4DB-P207-05	8051, 8066, 8067
5-1437667-9	4DB-P207-06	8051, 8066, 8067
6-1437667-0	4DB-P208-02	8051, 8066, 8067
6-1437667-1	4DB-P208-04	8051, 8066, 8067
6-1437667-2	4DB-P208-22	8051, 8066, 8067
6-1437667-3	4DB-R107-02	8051, 8066, 8067
6-1437667-4	4DB-R107-03	8051, 8066, 8067
6-1437667-5	4DB-R107-04	8051, 8066, 8067
6-1437667-6	4DB-R107-06	8051, 8066, 8067
6-1437667-7	4DB-R107-07	8051, 8066, 8067
6-1437667-8	4DB-R107-08	8051, 8066, 8067
7-1437667-0	4DB-R107-11	8051, 8066, 8067
7-1437667-1	4DB-R108-02	8051, 8066, 8067
7-1437667-2	4DB-R108-03	8051, 8066, 8067
7-1437667-2	4DB-R108-03	8051, 8066, 8067
7-1437667-3	4DB-R108-04	8051, 8066, 8067
7-1437667-4	4DB-R108-05	8051, 8066, 8067
7-1437667-5	4DB-R108-06	8051, 8066, 8067
7-1437667-7	4DB-R108-15	8051, 8066, 8067
7-1437667-8	4DB-R108-20	8051, 8066, 8067
7-1437667-9	4DB-R207-02	8051, 8066, 8067
8-1437667-0	4DB-R207-05	8051, 8066, 8067
8-1437667-1	4DB-R208-06	8051, 8066, 8067
8-1437667-3	4DB-S208-02	8051, 8066, 8067
8-1437667-4	4DB-S208-06	8051, 8066, 8067
8-1437667-5	4DB-S208-12	8051, 8066, 8067
8-1437667-6	4DB-W108-06	8051, 8066, 8067
8-1437667-7	4DB-W108-12	8051, 8066, 8067
8-1437667-8	4DB-W108-18	8051, 8066, 8067
8-1437667-9	4DB-W108-20	8051, 8066, 8067
9-1437667-0	4DB-W207-02	8051, 8066, 8067
9-1437667-1	4DB-W207-03	8051, 8066, 8067
9-1437667-2	4DB-W207-04	8051, 8066, 8067
9-1437667-3	4DB-W208-02	8051, 8066, 8067
9-1437667-4	4DB-W208-03	8051, 8066, 8067
9-1437667-5	4DB-W208-04	8051, 8066, 8067
9-1437667-6	4DB-W208-08	8051, 8066, 8067
9-1437667-7	4DB-W208-09	8051, 8066, 8067
9-1437667-8	4DB-W208-14	8051, 8066, 8067
1437668-6	4DB-R104-03	8051, 8066, 8067
1437668-7	4DB-R108-23	8051, 8066, 8067
1437671-1	2SV-02	8048
1437671-4	2SV-03	8048
1437671-6	2SV-04	8048
1437671-7	2SV-05	8048
1437671-9	2SV-06	8048
1-1437671-0	2SV-07	8048
1-1437671-1	2SV-08	8048
1-1437671-2	2SV-09	8048
1-1437671-3	2SV-10	8048
1-1437671-4	2SV-11	8048
1-1437671-5	2SV-12	8048
1-1437671-6	2SV-13	8048
1-1437671-9	2SV-14	8048
2-1437671-0	2SV-15	8048
2-1437671-1	2SV-16	8048
2-1437683-3	RB1-AG	8086
2-1437683-5	RB4-AG	8086
2-1437683-6	RB5-AG	8086
3-1437683-0	TB1	8086
1437685-1	2TK-48	8085
1437685-2	2TK-6	8085
1437685-3	2TK2-10	8085
1437685-6	2TK2-12	8085

Products for Industrial & Commercial Applications

Dimensions are shown for reference purposes only.

Dimensions are in inches and millimeters unless otherwise specified. Values in brackets are metric equivalents.

Specifications subject to change.

Technical Support Center
1-800-522-6752
www.tycoelectronics.com

Tyco Part Number	Acquired Part Number	Page Number
1437685-7	2TK2-15	8085
1437685-8	2TK2-2	8085
1437685-9	2TK2-24	8085
1-1437685-0	2TK2-3	8085
1-1437685-3	2TK2-48	8085
1-1437685-4	2TK2-6	8085
1-1437685-6	2TK2D-12	8085
1-1437685-7	2TK2D-24	8085
1-1437685-8	2TK2D-4	8085
1-1437685-9	2TK2D-48	8085
2-1437685-0	2TK2D-6	8085
2-1437685-2	3TK2-11	8085
2-1437685-3	3TK2-12	8085
2-1437685-6	3TK2-24	8085
2-1437685-9	3TK2-4	8085
3-1437685-1	3TK2-48	8085
3-1437685-3	3TK2-5	8085
3-1437685-4	3TK2-6	8085
3-1437685-5	3TK2D-12	8085
3-1437685-6	3TK2D-24	8085
3-1437685-7	3TK2D-48	8085
3-1437685-8	3TK2D-6	8085
4-1437685-0	4TK2-12	8085
4-1437685-1	4TK2-24	8085
4-1437685-2	4TK2-48	8085
4-1437685-3	4TK2-6	8085
4-1437685-4	4TK2-7	8085
4-1437685-6	6TK2-12	8085
4-1437685-7	6TK2-14	8085
4-1437685-8	6TK2-2	8085
4-1437685-9	6TK2-4	8085
5-1437685-0	6TK2-48	8085
5-1437685-2	6TK2-5	8085
5-1437685-5	6TK2-6	8085
5-1437685-6	6TK2D-12	8085
5-1437685-7	6TK2D-48	8085
5-1437685-8	6TK2D-6	8085
6-1437685-1	8TK2-12	8085
6-1437685-2	8TK2-2	8085
6-1437685-3	8TK2-24	8085
6-1437685-4	8TK2-48	8085
6-1437685-5	8TK2-6	8085
6-1437685-8	TK2-2-AG	8085
6-1437685-9	TK2-24-AG	8085
7-1437685-0	TK2-3-AG	8085
7-1437685-3	TK2-4-AG	8085
7-1437685-6	TK2-48-AG	8085
8-1437685-3	TK2-6-AG	8085
8-1437685-8	TK2D-12	8085
9-1437685-0	TK2D-3	8085
9-1437685-1	TK2D-48	8085
9-1437685-2	TK2D-6	8085
9-1437685-7	TK3-3	8085
9-1437685-8	TK5-5	8085
1-1437686-8	SMC2402	8047
1437687-1	FACE-40	8082
1437814-1	2TKD-12	8085
1437814-2	2TKD-6	8085
5-2143740-1	SM2V02	8047

Answers to your questions are just a phone call or mouse click away.

tyco Electronics

On-Line Catalog

http://catalog.tycoelectronics.com

If you prefer to find your information electronically, check out our web site featuring a catalog containing over 135,000 products. Customer drawings, specifications, test reports, CAD models and electrical SPICE models, PCB layouts and panel cutouts can be downloaded from the web site. Cross references to hundreds of competitors makes it even easier to find the right part for nearly any application.

Technical Support Center

1-800-522-6752
www.tycoelectronics.com/help

Our Technical Support Specialists provide information on distributor locations, drawing/prints, application/product specifications, PCB layouts, technical information, plating, electrical characteristics, dimensions, value added capabilities, and 3D modeling/simulation.

Tooling Assistance

1-800-522-6752
www.tycoelectronics.com/help

Tooling support specialists will assist you in selecting hand tools, machines and applicators, identify tooling parts, and provide information about maintenance, adjustment and repair.

Customer Service

1-800-522-6752
www.tycoelectronics.com/help

Receive price and delivery information immediately. You can also place new orders, change or expedite existing orders, and request product samples and literature through the Customer Service Department.

AMP FAX® Service

1-800-522-6752

Documents available through The AMP FAX Service include part numbers/catalog pages, drawings, application/product specifications, PCB layouts, and distributor information. Order as many as 20 pages of information at a time, with more than 100,000 drawings, specs, and more available.

tyco Electronics

TYCO ELECTRONICS CORPORATION
HARRISBURG, PA 17105



PRODUCTS FOR INDUSTRIAL & COMMERCIAL APPLICATIONS